Indiana Department of Transportation

County Jefferson Route US 421 Des. No. 1400918

FHWA-Indiana Environmental Document

CATEGORICAL EXCLUSION / ENVIRONMENTAL ASSESSMENT FORM

GENERAL PROJECT INFORMATION

Road No./County:	**US 421 / Jefferson County**
Designation Number:	**1400918**
Project Description/Termini:	Roadway Improvements: US 421 from Milton-Madison Bridge to the intersection of US 421/Baltimore Street and US 421/Main Street to the west and through the intersection of SR-56/Sering Street to the east.

After completing this form, I conclude that this project qualifies for the following type of Categorical Exclusion (FHWA must review/approve if Level 4 CE):

	Categorical Exclusion, Level 2 – The proposed action meets the criteria for Categorical Exclusion Manual Level 2 - table 1, CE Level Thresholds. Required Signatories: ESM (Environmental Scoping Manager)
	Categorical Exclusion, Level 3 – The proposed action meets the criteria for Categorical Exclusion Manual Level 3 - table 1, CE Level Thresholds. Required Signatories: ESM, ES (Environmental Services Division)
	Categorical Exclusion, Level 4 – The proposed action meets the criteria for Categorical Exclusion Manual Level 4 - table 1, CE Level Thresholds. Required Signatories: ESM, ES, FHWA
X	**Environmental Assessment (EA)** – EAs require a separate FONSI. Additional research and documentation is necessary to determine the effects on the environment. Required Signatories: ES, FHWA

Note: For documents prepared by or for Environmental Services Division, it is not necessary for the ESM of the district in which the project is located to release for public involvement or sign for approval.

Release for Public Involvement

Ron Bales for 12/28/17

ES Signature Date

MICHELLE B ALLEN Digitally signed by MICHELLE B ALLEN DN: c=US, o=U.S. Government, ou=FHWA FHWAIndianapolisIN, ou=DOT FHWAIndianapolisIN, cn=MICHELLE B ALLEN Date: 2018.01.18 07:00:48 -05'00'

FHWA Signature Date

Certification of Public Involvement _____ _____

Office of Public Involvement Date

INDOT ES/District Env. Reviewer Signature: _____ Date: _____

Name and Organization of CE/EA Preparer: Michael S. Oliphant, United Consulting

Part I - PUBLIC INVOLVEMENT

Every Federal action requires some level of public involvement, providing for early and continuous opportunities throughout the project development process. **The level of public involvement should be commensurate with the proposed action.**

	Yes	No
Does the project have a historic bridge processed under the Historic Bridges PA*?		X
If No, then:		
Opportunity for a Public Hearing Required?	X	

**A public hearing is required for all historic bridges processed under the Historic Bridges Programmatic Agreement between INDOT, FHWA, SHPO, and the ACHP.*

Discuss what public involvement activities (legal notices, letters to affected property owners and residents (i.e. notice of entry), meetings, special purpose meetings, newspaper articles, etc.) have occurred for this project.

Remarks:

A good faith effort was made to provide all of the affected property owners with a notice of entry letter on November 2, 2015.

Three public information meetings have been held for this project. The first public information meeting was held at Clifty Falls State Park on December 3, 2015. The purpose of this meeting was to gather input before substantially beginning the study along the US 421 corridor. As a result, no formal presentation was provided at this meeting. A sign-in sheet documenting attendance at the meeting is included on Appendix G, G-2 to G-7. An advertising flier of the open house can be viewed at Appendix G, G-1. No alternatives were presented during the open house. Instead the project team listened and gathered insight as the public provided recommendations regarding potential alignments for US 421 and design considerations.

The second public information meetings was held on February 18, 2016 at the Brown Gymnasium located in Madison. The Indiana Department of Transportation (INDOT) and the project team presented nine alternatives for consideration. This public open house allowed residents to discuss these routes. As a result, no formal presentation was provided at this meeting. A sign-in sheet documenting attendance at the meeting is included on Appendix G, G-9 to G-19. An advertising flier of the open house can be viewed at Appendix G, G-8. The alternatives were presented to the general public at stations set up in the gymnasium. Members of the project team manned the stations and listened as the public commented about each of the alternatives. The public provided positive and negative feedback in regarding each of the nine alternatives presented at the meeting.

A third public information meeting was held on August 18, 2016 at the Jefferson County Public Library. Like the earlier meetings, the alternatives were presented to the general public at stations setup in the library. Members of the project team manned the stations and listed as the public commented on each of the remaining alternatives. Residents reviewed and provided feedback on the proposed alternatives prior to the selection of the preferred alternative. The feedback from this meeting was used to assist in the selection of the preferred alternative. An advertising flier of the open house can be viewed at Appendix G, G-20. A sign-in sheet documenting the attendance at the meeting is included on Appendix G, G-21 to G-25.

To meet the public involvement requirements of Section 106, FHWA's finding of "Adverse Effect" was advertised in the Madison Courier on July 1, 2017 (Appendix C, C-235). The public comment period closed on August 1, 2017. No comments were received by the published deadline.

The proposed project is being processed as an Environmental Assessment (EA). Per the current *Indiana Department of Transportation (INDOT) Public Involvement Manual 2012*, Part 1, Section IV.C.4, a public hearing will be provided to the public. Upon release of the EA for public involvement, a legal advertisement will be placed in local publications notifying the public of the EA's availability for review and comment for a period of 30 days.

The legal notice will appear in local publications of general circulation, contingent upon the release of this document for public involvement, announcing the availability of the environmental documentation, and the date and venue of the public hearing at least 15 days and again at least seven days in advance of the event. The hearing will allow the public to formally provide comments on the preferred alternative and potential effects to the social and natural environment. Comments will be accepted for a period of 15-days following the hearing. Furthermore, a Notice of Intent (NOI) will be advertised in the same local publications and mailed to the established mailing list compiled for the project, announcing the availability of the approved environmental document and disposition of public comments.

Subsequent to the satisfactory completion of the public involvement process, and if determined appropriate, a request for preparation of a Finding of No Significant Impact (FONSI) will be submitted to Federal Highway Administration (FHWA) through INDOT. All comments received during this period will be listed and individually addressed in the disposition of comments attachment included in the FONSI request packet. If any comments cause a re-examination or require a change to the EA, an Additional Information document may be prepared and approved by FHWA prior to the submission of the FONSI request to FHWA. The preparation of the FONSI by FHWA will indicate the NEPA process for this project has been completed. Individuals included on the mailing list for the project, which includes the identified adjacent landowners, attendees of the public information meeting and the public hearing, as well as others who have submitted a request for project specific information, will be notified by US Mail of the FONSI issuance by FHWA. In addition, a public notice announcing the availability of the FONSI will be advertised in local publications of general circulation.

Public Controversy on Environmental Grounds	**Yes**	**No**
Will the project involve substantial controversy concerning community and/or natural resource impacts?		X

Remarks: This project is not known to be controversial due to community or environmental impacts.

Part II - General Project Identification, Description, and Design Information

Sponsor of the Project: FHWA and INDOT INDOT District: Seymour
Local Name of the Facility: US 421 (Harrison Street)

Funding Source (*mark all that apply*): Federal [X] State [X] Local [ ] Other* [ ]

*If other is selected, please indentify the funding source: _____

PURPOSE AND NEED:

Describe the transportation problem that the project will address. The solution to the traffic problem should NOT be discussed in this section. (Refer to the CE Manual, Section IV.B.2. Purpose and Need)

Purpose of the US 421 Road Construction Project

The purpose of the proposed project is to increase operational efficiency and traffic safety by relieving congestion at a series of 90-degree turns on US 421 between the Milton-Madison Bridge and Main Street, while reducing the environmental impacts associated with idling and braking of trucks. Additionally, the project will support opportunities for economic development in the community by managing access and enhancing pedestrian accessibility in the project area.

The purpose of the proposed project is summarized in the following four bullets:

- Enhance mobility and safety in the corridor, distinguishing between local and through traffic.
- Reduce the environmental impact of trucks through the corridor.
- Support opportunities for economic development in the community by managing access and enhancing pedestrian accessibility.
- Reduce the number of contributing historic properties impacted by US 421 vehicular traffic.

Need for the US 421 Road Construction Project

The need for improvement is caused by poor geometry of the existing roadway alignment which has led to vehicle congestion. This congestion has led to a history of vehicle collisions throughout the corridor. Additionally, the poor geometry has led to increased noise and air pollution. The City of Madison, INDOT, and FHWA previously committed to improving the approach roadway conditions as part of the Milton-Madison Bridge Replacement (completed in 2014 as part of a separate project, Des. No.: 0902256). Overall, the need for improvement is caused by poor geometry and safety, traffic congestion, air pollution, noise pollution, poor pedestrian connectivity, and perpetual impacts to historic properties. The following paragraphs further describe each aspect of the project need.

1) Enhance Mobility and Safety in the Corridor

With approximately 11,500 vehicles per day, including 920 local commercial trucks, using US 421 over the Ohio River between Milton, Kentucky, and Madison, Indiana, the efficiency of the corridor is essential to not only the citizens of Madison but the traveling public of Indiana and Kentucky. Additionally, the importance of this route is highlighted by the next nearest river crossings being located at Markland Dam over 26 miles upstream and I-265 Ohio River Bridge East End Crossing in Louisville, Kentucky over 46 miles downstream. Commuters in both Jefferson County, Indiana and Trimble County, Kentucky travel the US 421 Bridge over the Ohio River to access jobs, emergency and health care facilities, and commerce, with 70% of the trips crossing the US 421 Bridge having origins or destinations within Madison.

Currently, vehicles traveling along US 421 must negotiate a series of 90-degree turns in a residential neighborhood intermingled with commercial businesses on a segment of highway north of the US 421 Bridge. Many of the properties adjacent to the existing roadway are contributing to the Madison National Historic Landmark (NHL) Historic District and Madison National Register of Historic Places (NRHP) Historic District within the City of Madison. Traveling northbound, vehicles must make a left turn from US 421/Harrison Street to Second Street and a right turn from Second Street to Baltimore Street, before turning left from Baltimore Street onto SR-56/East Main Street. Additionally, vehicular access to/from adjacent properties is limited during

peak hour traffic due to congestion along US 421. The poor access has contributed to the underutilization of several parcels along US 421 north of the bridge.

Crash records were collected from INDOT over a four year period (January 1, 2012 through September 30, 2015). North of the US 421 Bridge, 22 crashes were reported along US 421 south of the intersection with SR-56.

- One crash was reported at the Harrison Street/Fillmore Street intersection.
- Six crashes, including two injury collisions, were reported at the Harrison Street intersection with First Street and the adjacent approaches. The majority of these crashes were rear-end and right-angle collisions; northbound bridge traffic will often use First Street as a cut-through to avoid delays along Second Street and Baltimore Street. The right-angle collisions can be traced to drivers failing to yield right-of-way.
- Six crashes were reported at the Harrison Street/Second Street intersection and adjacent approaches. The majority of these crashes were rear-end (vehicles backing up to clear space for turning trucks) and side-swipe (trucks not being able to make left turns and avoid oncoming vehicles within the pavement limits).
- Four crashes, including one injury collision, were reported at the Second Street/Baltimore Street intersection and the adjacent approaches. The majority of these crashes can be traced to drivers failing to yield right of-way and performing unsafe turning maneuvers.
- Five crashes, including one injury collision, were reported at the Baltimore Street intersection with SR-56. The majority of these crashes can be traced to drivers failing to yield right of-way and performing unsafe turning maneuvers.

2) Environmental Impact of Trucks

The existing US 421 corridor accommodates approximately 920 commercial trucks per day. Tight turning radii at roadways intersecting US 421 are inadequate for truck movements, forcing large trucks to travel outside of their designated lane and use multiple lanes when turning. Trucks often must wait until the adjacent lane is clear of other traffic before completing turns. Alternately, trucks resort to driving on the outside curb and/or sidewalk to complete turns if there is not a clear space in the adjacent lane. The noise, vibration, and air pollution caused by idling, braking, and accelerating trucks along the existing US 421 route degrades the quality of life for adjacent residents.

3) Pedestrian Connectivity

Currently, the US 421 corridor has limited means to accommodate pedestrian traffic (i.e. sidewalks, multi-use paths, bike lanes, etc.). The lack of pedestrian facilities along this corridor restricts connectivity among neighborhoods, businesses, historic sites, and the new pedestrian facility on the Milton-Madison Bridge. Also, the new pedestrian facility along the Milton-Madison Bridge is inaccessible from Second Street. Pathway users must access the facility from a stairway underneath the bridge. Residents, business owners, and local officials view US 421 north of the Milton-Madison Bridge as a gateway into their community. Several underutilized properties have been identified adjacent to existing US 421 north of the Milton-Madison Bridge. Facilitating pedestrian connectivity to these properties will bring added visibility and marketability to this area.

4) Impacts to Contributing Historic Properties

Currently, thirty-three properties identified as contributing to the Madison NHL Historic District and Madison NRHP Historic District are adjacent to the existing US 421 alignment. The existing alignment bisects a residential neighborhood within the Madison NHL Historic District and Madison NRHP Historic District. All properties within this neighborhood are subject to air, noise, and vibration pollutants. In addition, access to these properties is often impaired or limited during peak hours due to the heavy volume of truck traffic.

PROJECT DESCRIPTION (PREFERRED ALTERNATIVE):

County: Jefferson Municipality: Madison

Limits of Proposed Work: US 421 from Milton-Madison Bridge to the intersection of US 421/Baltimore Street and US 421/Main Street to the west and through the intersection of SR-56/Sering Street to the east.

Total Work Length: 0.46 Mile(s) Total Work Area: 6.98 Acre(s)

	Yes[1]	No
Is an Interchange Modification Study / Interchange Justification Study (IMS/IJS) required?		X
If yes, when did the FHWA grant a conditional approval for this project?	Date:	

[1]*If an IMS or IJS is required; a copy of the approved CE/EA document must be submitted to the FHWA with a request for final approval of the IMS/IJS.*

In the remarks box below, describe existing conditions, provide in detail the scope of work for the project, including the preferred alternative. Include a discussion of logical termini. Discuss any major issues for the project and how the project will improve safety or roadway deficiencies if these are issues.

Existing Conditions:

The proposed project is located within Jefferson County, Indiana in the City of Madison and located through a portion of the Madison NHL Historic District and Madison NRHP Historic District. The project is located within Section 2, Township 3 North, and Range 10 East within the Madison, Indiana 7.5-minute United States Geological Survey (USGS) Topographic Quadrangle and is approximately 0.46 mile in length. A map showing the project area is located at Appendix A, A-4. The proposed corridor improvements, located on the Indiana border of the Ohio River, are immediately adjacent to the Milton-Madison Bridge, providing approach access from the north. The limits of the project area begin at the northern approach to the Milton-Madison Bridge and extend through the intersection of US 421/Baltimore Street and US 421/Main Street to the west and through the intersection Second Street and SR-56/Sering Street to the east. The southern project limits begin at the termini of a previous project (Milton-Madison Bridge Replacement Project, Des. No.: 0902256) to the south and extends to SR-56 to the north. These logical termini were established based on the Milton-Madison Bridge crossing and where US 421 routes through the Madison NHL Historic District and Madison NRHP Historic District. The proposed project is not dependent on any other future projects to meet the project purpose and need and therefore exhibits independent utility. A description of the roadways within the project limits is provided below:

US 421 (Sering Street and Main Street)

US 421 is listed as a MAP-21 National Highway System (NHS) urban principal arterial by the FHWA. It travels north-south, connecting Michigan City, Indiana to Wilmington, North Carolina. Through the project area, the speed limit is 30 mph. From the Milton-Madison Bridge to the intersection of US 421 and Second

Street, there is one twelve foot lane in each direction of travel. From Harrison Street, US 421 turns west along Second Street and then north onto Baltimore Street, where both streets are 32 feet wide (not including curb and gutter) to allow on-street parking. US 421 west of the Main Street/Baltimore Street intersection has two 12-foot lanes in each direction and an 8-foot parking lane on either side of the roadway.

The current alignment routes nearly 11,500 vehicles through a series of 90-degree turns in a mixed commercial and residential neighborhood, causing traffic congestion, safety concerns, and negative environmental impacts. The congestion and environmental pollution is heightened due to the large volume of truck traffic (8% of the overall Average Annual Daily Traffic (AADT)). Most trucks are forced to idle at the intersections waiting for clear gaps in oncoming traffic because the trucks are required to complete turns outside of their lane due to inadequate turning radii at intersections.

SR-56 (Main Street, Sering Street, Park Avenue)

SR-56 in Jefferson County is listed as a MAP-21 NHS urban principal arterial by the FHWA and travels east-west from Hazleton, Indiana to Aurora, Indiana. The speed limit through the project area is 30 mph. SR-56 has one 11 foot travel lane in each direction with no shoulder on the north side and a narrow 4 foot sidewalk flush with the mainline pavement on the south side. SR-56 follows the same alignment as US 421 on Main Street between Jefferson Street and Baltimore Street.

Second Street

Second Street in Madison, Indiana is designated as an urban minor arterial and is the responsibility of the City of Madison. Second Street travels east-west through Madison. From Baltimore Street to Harrison Street, Second Street is a part of US 421. The existing 32 foot section consists of two travel lanes with on-street parking allowed on both sides.

Project Description:

The preferred alternative is an at grade alignment (Alternative 6). A copy of the alternative analysis showing all the examined alternatives is located on Appendix J, J-16 to J-62 (the alternatives can be seen at Appendix J, J-55 to J-62). The proposed project will include maintaining US 421 on the existing Harrison Street alignment north of the Milton-Madison bridge. North of the Second Street intersection, US 421 will follow a new alignment on horizontal curve to the north and west tying into Main Street at Roosevelt Street. A signalized intersection will be provided at the intersection of Second Street/SR 56 and US 421. A 15 to 20 foot grade change between Second Street and Sering/US 421 will require retaining walls of varying location and height. Second Street will be re-designated as SR-56 between Sering Street and US 421/Main Street, and then continue on a shared alignment with US 421 to Jefferson Street, consistent with the existing route designations. The existing SR-56/Sering Street between Second Street and Main Street will be converted to an access road serving two residences. The access road will consist of a 16-foot drive approach. Adjacent to the pavement will be a raised curb on the north and south sides of the street. A 5-foot sidewalk with a 3-foot buffer will be adjacent to the south curb. The sidewalk will not impact the historic properties to the south.

The proposed cross section along US 421 consists of two 11-foot travel lanes, one each northbound and southbound. Adjacent to the roadway pavement will be a raised curb and gutter with a 6-foot sidewalk adjacent to the curb and gutter on the east side of US 421 from Fillmore Street to Second Street. Adjacent to the west side curb and gutter from Fillmore Street to Second Street will be a 10-foot multi-use trail separated by a 5-foot grass strip. North of Second Street, US 421 will consist of two 11-foot travel lanes, one each

northbound and southbound, with adjacent curb and gutter on both sides.

SR-56 and Second Street will consist of two 10-foot travel lanes, one each eastbound and westbound, with an additional 6-foot of pavement on either side for an 8-foot parking lane. The other 2-foot of parking lane width will come from the 2-foot gutter portion of the raised curb and gutter adjacent to the pavement on both the north and south sides of the street. A 5-foot sidewalk will be adjacent to the curb and gutter on both sides of the street, separated by a 4.5-foot grass strip on the south side and a 5.5-foot grass strip on the north side.

The project will include the construction of a pedestrian bridge with a 16 foot clear width. This pedestrian structure will connect to the walkway on the bridge carrying US 421 over the Ohio River. The proposed structure will be a single span (84.5 feet) composite continuous steel W-beam structure with a reinforced concrete deck. The total bridge length will be 88.29 feet. The clear structure roadway width will be 6.63 feet. The out to out coping width will be 8 feet. Please see Appendix A, A-57 to A-58 for a drawing showing the pedestrian connection.

The preferred alternative offers the best movement of trucks through the corridor and several municipal amenity opportunities, as well as providing good pedestrian access. The traffic signal at US 421 (Harrison Street) and SR-56/Second Street will provide a controlled location for pedestrians to cross US 421. Because it has the best movement of trucks, this alternative also has the best reduction in both air and noise pollution.

OTHER ALTERNATIVES CONSIDERED:

Describe all discarded alternatives, including the Do-Nothing Alternative and an explanation of why each discarded alternative was not selected.

The proposed project analyzed alternatives (including the No-build or Do Nothing alternative) based on the ability to improve mobility and safety in the corridor, reduce the environmental impacts of trucks, support economic development by managing access and enhancing pedestrian accessibility, and minimizing impacts to the City of Madison, Jefferson County, and local stakeholders. Nine preliminary build alternatives and a no-build alternative were evaluated. Each of the alternatives are shown on Appendix J, J-55 to J-62. They are briefly discussed below.

No-Build Alternative

This alternative would not result in improvements to the condition of the existing roadway. This alternative would not meet the objectives of the purpose and need. It would not improve maneuverability, reduce commercial vehicle impacts, reduce impacts to contributing properties and improve pedestrian connectivity; nor would it improve safety conditions or increase passing opportunities or decrease vehicular crashes. This alternative would avoid impacts to historic resources and Section 4(f) properties.

1) Improved US 421 Intersection

This alternative keeps US 421 on its existing alignment but upgrades the intersections to accommodate the turning radii required for the larger semis using the corridor. Corner radii would be improved at the Main Street /Baltimore Street, Baltimore Street /Second Street and Second Street /Harrison Street intersections.

2) Reroute US 421 along Second Street to Jefferson Street

In this alternative, after turning west onto Second Street, US 421 would continue along Second Street to

Jefferson Street. At Jefferson Street, US 421 would turn north (right) through historic downtown Madison before rejoining the existing US 421 alignment. Existing Second Street is stop-controlled at all intersections west of Baltimore Street.

3) Signalized T-Intersection with SR-56 Intersecting US 421

US 421 would be at-grade at the intersection with 1st Street in this alternative. North of 1st Street, US 421 would be built up in order to bridge over Second Street and then would turn to connect to Main Street at the Roosevelt Street/Main Street intersection. West of where SR-56 intersects Second Street, SR-56 would turn to "T" into US 421. The intersection of US 421 and SR-56 would be signalized.

4) Signalized T-Intersection with US 421 Intersecting SR-56

Similar to the previous alternative, US 421 would be at-grade at the intersection with 1st Street. North of 1st Street, US 421 would be built up in order to bridge over Second Street and then would turn to intersect SR-56 between Main Street and Second Street, creating a "T" intersection. SR-56 would maintain its current alignment. The intersection of US 421 and SR-56 would be signalized.

5) Four-Leg Two-Way Stop-Control Intersection at Second Street & Harrison Street

For this alternative, US 421 would be at-grade at the intersection with 1st Street and Second Street. North of Second Street, US 421 would cut through the hillside as it turns to connect to Main Street at the Roosevelt Street/Main Street intersection. The four-leg intersection would be stop-controlled on the east and west approaches.

6) Four-Leg Signalized Intersection at Second Street & Harrison Street (Preferred Alternative)

Utilizing the same geometrics as the previous alternative, US 421 would be at-grade at the intersection with 1st Street and Second Street. North of Second Street, US 421 would cut through the hillside as it turns to connect to Main Street at the Roosevelt Street/Main Street intersection. Unlike the previous alternative, the four-leg intersection would be signal-controlled.

7) Single-Quadrant Interchange

This alternative includes many of the same elements as the Signalized T-Intersection with US 421 Intersecting SR-56 alternative except that the similar elements are shifted to the east enough to maintain the current Harrison Street roadway. Starting at the Fillmore Street, US 421 would shift east and be at-grade at the intersection with 1st Street. North of 1st Street, US 421 would be built up in order to bridge over Second Street and then would turn to intersect SR-56 between Main Street and Second Street, creating a "T" intersection. SR-56 would maintain its current alignment. The intersection of US 421 and SR-56 would be signalized. Meanwhile, Harrison Street would shift west south of the Adams Avenue and intersect 1st Street just west of the new US 421/1st Street intersection.

8) Roundabout at SR-56 and Ferry Street

This alternative turns US 421 east starting north of the Milton-Madison Bridge approach. US 421 would head

east a little further north than the 1st Street alignment before turning northeast to tie in at the existing location of the SR-56/Ferry Street intersection. Due to the irregular intersection geometry, the intersection will be redesigned to be a single lane roundabout to better and more safely accommodate all approaches to the intersection. US 421 would then follow the existing SR-56 alignment to Main Street.

9) US 421 Bridge Over Second Street, Direct Connection to Main Street

The alignment for US 421 in this alternative is the same as in the Signalized T-Intersection with SR-56 Intersecting US 421 alternative. US 421 would be at-grade at the intersection with 1st Street. North of 1st Street, US 421 would be built up in order to bridge over Second Street and then would turn to connect to Main Street at the Roosevelt Street/Main Street intersection. SR-56 would turn west at the existing SR-56/Second Street intersection and follow Second Street to Baltimore Street At Baltimore Street, SR-56 would turn north and intersect US 421 at Main Street. The intersection of US 421 and SR-56 at Main Street and Baltimore Street would be stop-controlled on the northbound and southbound approaches.

Screening of Alternatives:

Through discussion with INDOT, FHWA, the City of Madison, Consulting Parties, and residents of the City of Madison, nine preliminary build alternatives and a no-build alternative were developed and included in a 2016 Alternatives Analysis (Appendix J, J-16 to J-62). An evaluation matrix was constructed to compare the alternatives based on mainline (US 421) operations, local traffic operations, environmental impacts, access, supporting economic development and cost. The extent of the analysis encompassed the impacts of the proposed alternatives on the surrounding road network, as congestion on US 421 could also impact local street operations.

The only feasible Section 4(f) avoidance alternative for this project is the no build alternative due to the project's location in the Madison NHL Historic District and Madison NRHP Historic District. As a result, no other Section 4(f) avoidance alternative were considered for this project.

The evaluation conducted for the screening consisted primarily of desktop environmental/historical reviews, microscopic traffic analysis, and conceptual geometric designs. From the analysis results, it became quickly apparent that the alternatives that kept any mainline traffic on the existing route could be eliminated because traffic operation results did not meet the purpose and need of enhancing mobility; thus, eliminating alternatives 2, 3, and 9. Due to the similarities in configuration between Alternative 4 and 5, the results of both alternatives were compared. Because Alternative 4 outperformed Alternative 5 in terms of mobility and safety, Alternative 5 was eliminated. Alternative 7, while providing good mobility results, was eliminated because of its lesser safety benefits, significant footprint, and overall right-of-way impact. Alternative 1, the no-build, will be carried forward as a baseline for comparison. Alternatives 4, 6, and 8 best meet the purpose and need of enhancing traffic flow and safety in the corridor and were forwarded for further analysis.

To further evaluate the four primary alternatives, additional criteria, consistent with the project purpose and need, were outlined to enhance the alternative selection process and reflect the broader project goals and objectives. Since the reduction of environmental impacts of trucks through the corridor was such a large driver to the project initiation, both environmental considerations and truck movement became secondary criteria, subdivided into measurable criteria. Additionally, factors reflecting a need to support economic development opportunities by managing access and enhancing pedestrian connectivity were identified through municipal amenity and pedestrian access measures. Finally, while not a direct principle highlighted in the purpose and need, the importance of delivering the project was highlighted through schedule implications and project cost

factors. These non-traffic related criteria were then evaluated by project leadership consisting of INDOT Project and Program Management, City of Madison Community Leaders and the consultant Project Team to ensure they reflected the purpose and need of the project. Alternatives 4 and 8 were discarded because alternative 6 provided the least overall impact to historic resources. Alternative 6 offers one of the best options for enhanced mobility and safety in the corridor. This alternative provides the best mobility for truck traffic that will provide the greatest environmental improvements in air and noise pollution. The four-leg intersection has a similar right of way impact to the SR-56 T-intersection with US 421 alternative in both acreage and parcels impacted, but does not have a bridge creating a visually divisive barrier through the historic districts.

The Do Nothing Alternative is not feasible, prudent or practicable because (*Mark all that apply*):

It would not correct existing capacity deficiencies;	X
It would not correct existing safety hazards;	
It would not correct the existing roadway geometric deficiencies;	X
It would not correct existing deteriorated conditions and maintenance problems; or	
It would result in serious impacts to the motoring public and general welfare of the economy.	X
Other (Describe)	

ROADWAY CHARACTER:

US 421

Functional Classification:	Principal Arterial				
Current ADT:	12,223	VPD (2020)	Design Year ADT:	15,826	VPD (2040)
Design Hour Volume (DHV):	1,472	Truck Percentage (%)	10%		
Designed Speed (mph):	30	Legal Speed (mph):	30		

	Existing		Proposed	
Number of Lanes:	2		3	
Type of Lanes:	2 travel lanes		2 travel lanes and a turn lane	
Pavement Width:	22	ft.	33	ft.
Shoulder Width:	N/A	ft.	N/A	ft.
Median Width:	N/A	ft.	N/A	ft.
Sidewalk Width:	6	ft.	6	ft.

Setting:	X	Urban		Suburban		Rural
Topography:	X	Level		Rolling		Hilly

If the proposed action has multiple roadways, this section should be filled out for each roadway.

Indiana Department of Transportation

County Jefferson Route US 421 Des. No. 1400918

SR-56

Functional Classification: Principal Arterial
Current ADT: 3,821 VPD (2020) Design Year ADT: 9,948 VPD (2040)
Design Hour Volume (DHV): 460 Truck Percentage (%) 10%
Designed Speed (mph): 30 Legal Speed (mph): 30

	Existing		Proposed	
Number of Lanes:	2		2	
Type of Lanes:	2 travel lanes		2 travel lanes	
Pavement Width:	22	ft.	22	ft.
Shoulder Width:	3	ft.	3	ft.
Median Width:	N/A	ft.	N/A	ft.
Sidewalk Width:	5	ft.	5	ft.

Setting: [X] Urban [ ] Suburban [ ] Rural
Topography: [X] Level [ ] Rolling [ ] Hilly

If the proposed action has multiple roadways, this section should be filled out for each roadway.

Second Street

Functional Classification: Minor Arterial
Current ADT: 1,774 VPD (2020) Design Year ADT: 2,297 VPD (2040)
Design Hour Volume (DHV): 214 Truck Percentage (%) 2
Designed Speed (mph): 30 Legal Speed (mph): 30

	Existing		Proposed	
Number of Lanes:	2		2	
Type of Lanes:	2 travel lanes		2 travel lanes	
Pavement Width:	22	ft.	33	ft.
Shoulder Width:	N/A	ft.	N/A	ft.
Median Width:	N/A	ft.	N/A	ft.
Sidewalk Width:	5	ft.	5	ft.

Setting: [X] Urban [ ] Suburban [ ] Rural
Topography: [X] Level [ ] Rolling [ ] Hilly

oposed action has multiple roadways, this section should be filled out for each roadway.

DESIGN CRITERIA FOR BRIDGES:

Structure/NBI Number(s): Pedestrian bridge Sufficiency Rating: N/A
(Rating, Source of Information)

	Existing		Proposed	
Bridge Type:	N/A		Composite Continuous Steel Beam	
Number of Spans:	N/A		1	
Weight Restrictions:	N/A	ton	90 psf	ton

County Jefferson Route US 421 Des. No. 1400918

			pedestrian loading	
Height Restrictions:	N/A	ft.	N/A	ft.
Curb to Curb Width:	N/A	ft.	6.63	ft.
Outside to Outside Width:	N/A	ft.	8	ft.
Shoulder Width:	N/A	ft.	N/A	ft.
Length of Channel Work:			N/A	ft.

Describe bridges and structures; provide specific location information for small structures.

Remarks: The proposed structure will be a single span (84.5 feet) composite continuous steel W-beam structure with a reinforced concrete deck. The total bridge length will be 88.29 feet. The clear structure roadway width will be 6.63 feet. The out to out coping width would be 8 feet. Please see Appendix A, A-57 to A-58 for plan sheets showing the pedestrian bridge.

	Yes	No	N/A
Will the structure be rehabilitated or replaced as part of the project?		X	

If the proposed action has multiple bridges or small structures, this section should be filled out for each structure.

MAINTENANCE OF TRAFFIC (MOT) DURING CONSTRUCTION:

	Yes	No
Is a temporary bridge proposed?		X
Is a temporary roadway proposed?		X
Will the project involve the use of a detour or require a ramp closure? (describe in remarks)		X
Provisions will be made for access by local traffic and so posted.	X	
Provisions will be made for through-traffic dependent businesses.	X	
Provisions will be made to accommodate any local special events or festivals.	X	
Will the proposed MOT substantially change the environmental consequences of the action?		X
Is there substantial controversy associated with the proposed method for MOT?		X

Remarks:

An evaluation of the existing roadway network, the proposed scope of work, the footprint required for construction, and the constraints associated with the adjacent land uses was made to develop a traffic maintenance plan that encourages a minimal cost and impact to the traveling public. Because the Milton-Madison Bridge is the only Ohio River crossing for approximately 45 miles in either direction, construction sequencing will seek to utilize construction methods that will allow use of the bridge during construction. Due to high truck traffic volumes, it is recommended that the project be done in phases. It is further recommended that the traffic maintenance be divided into five primary phases:

Phase I

- Restriction of traffic on US 421 (Harrison Street) for the construction pavement and temporary pavement on US 421 (Harrison Street) for use in future Maintenance of Traffic phases.
- Closure of Second Street (no detour provided), from US 421 (Harrison Street) to Sering Street for the construction of pavement, sidewalk, curb, driveways and drainage.
- Restriction of traffic on Main Street for construction of the north side of Main Street, from Baltimore to Roosevelt Street pavement, sidewalk, curb, driveways and drainage.
- Construction of the US 421 extension from Second Street to just south of Sering Street.
- Maintain access to residential properties and businesses.

Phase IA

- Install temporary traffic signal for completion of Second Street / Sering Street intersection realignment. Construction to include the pavement and curb at this intersection.
- Temporary traffic signal will be limited to a 1-week duration to facilitate 1-lane, 2-way traffic.

Phase II

- Construction of the US 421 connection to Main Street for curbs, sidewalk pavement and drainage. Construct Sering Street access to the residential properties that will remain.
- Permanent closure of Sering Street from Main Street to Second Street.
- Restriction of traffic on Main Street to access only to Roosevelt Street and hotel for the construction of the south side of Main Street pavement, sidewalk, curb, driveway and drainage.
- Detour SR-56 traffic onto Second Street to follow existing US 421 (Harrison Street) on Second Street and Baltimore Street.
- Maintain access to residential and businesses.

Phase III

- Traffic to be moved to the east side of US 421 (Harrison Street) utilizing the temporary pavement to maintain two-way traffic.
- Closure of Second Street (no detour provided) from Baltimore Street to US 421 (Harrison Street) for the construction of pavement, sidewalk, curb, driveways and drainage.
- Restriction of traffic on Main Street to construct the south side approach to Baltimore Street and Main Street intersection.

- Construct the west side of US 421 (Harrison Street) from Fillmore Street to Second Street pavement, sidewalk, curb, driveway and drainage.
- Traffic to be maintained in two directions on US 421.

Phase IV

- Construct east side of US 421 (Harrison Street), from Second Street south to Fillmore Street.
- Traffic to be maintained in two directions on US 421 (Harrison Street).

Phase V

- Construct remainder of new southbound US 421 (Harrison Street) pavement from Milton-Madison Bridge to 1st Street.
- Use temporary traffic signal from 1st Street south to Milton-Madison Bridge to maintain one-lane, two-way traffic.
- Complete all reconstruction activities prior to opening to traffic.

Phase VI

- Replacement of the sidewalk and driveways on Second Street, Baltimore Street to US 421 (Harrison Street) and the replacement of sidewalk on Baltimore Street from Second Street to Main Street.
- Work to be performed by daily lane closures in accordance to the INDOT Standard Drawings.

Phase VII

- Placement of surface pavement and pavement markings.
- Work to be performed by daily lane closures in accordance to the INDOT Standard Drawings.

Numerous local events and festivals occur within the City of Madison. Please see the section entitled "Community Impacts" for a listing of annual events held in the City of Madison. Traffic is being maintained on US 421 during construction. As a result, the project is not expected to significantly impact festivals and events occurring within Madison.

The maintenance of traffic will remain within the existing footprint of the existing roadway. As a result, the proposed MOT will not substantially change the environmental consequences of the action. As part of the Memorandum of Agreement (MOA) executed during completion of the Section 106 process, INDOT shall ensure that the contractor utilize a Traffic and Parking Management Plan for maintenance of traffic during construction that is sensitive to the historic districts and makes practical and reasonable efforts to minimize impacts to historic districts.

ESTIMATED PROJECT COST AND SCHEDULE:

Engineering: $ 750,000 (2018) Right-of-Way: $ 1,200,000 (2018) Construction: $ 10,760,000 (2019)

Anticipated Start Date of Construction: February 2019

Date project incorporated into STIP July 3, 2017

	Yes	No
Is the project in an MPO Area?		X

If yes,

Indiana Department of Transportation

County Jefferson Route US 421 Des. No. 1400918

Name of MPO N/A

Location of Project in TIP N/A

Date of incorporation by reference into the STIP N/A

RIGHT OF WAY:

	Amount (acres)	
Land Use Impacts	Permanent	Temporary
Residential	0.60	0.00
Commercial	1.40	0.22
Agricultural	0.00	0.00
Forest	0.00	0.00
Wetlands	0.00	0.00
Other:	0.00	0.00
Other:	0.00	0.00
TOTAL	2.00	0.22

Describe both Permanent and Temporary right-of-way and describe their current use. Typical and Maximum right-of-way widths (existing and proposed) should also be discussed. Any advance acquisition or reacquisition, either known or suspected, and there impacts on the environmental analysis should be discussed.

Remarks:

It is estimated that 2.0 acres of permanent right-of-way will need to be acquired as part of this project. The project does not involve any early acquisition. This project will require the acquisition of six structures. It is not anticipated that reacquisition of right-of-way will be required for this project. Land uses along the project corridor are primarily commercial and residential.

The proposed project will require the acquisition of 0.22 acres of temporary right-of-way which will be used for grading and drive construction.

US 421

The existing right-of-way width from the centerline of US 421 is a minimum of 61feet and a maximum 209 feet. The proposed typical right-of-way width along US 421 will be 99 feet.

Second Street

The existing right-of-way width from the centerline of Second Street is a minimum of 60 feet and a maximum 73 feet. The proposed typical right-of-way width along Second Street will be 60 feet.

SR-56

The existing right-of-way width from the centerline of SR-56 is a minimum of 40 feet and a maximum 73 feet. The proposed typical right-of-way width along SR-56 will be 60 feet.

Part III – Identification and Evaluation of Impacts of the Proposed Action

SECTION A – ECOLOGICAL RESOURCES

	Presence	Impacts Yes	Impacts No
Streams, Rivers, Watercourses & Jurisdictional Ditches	X		X
Federal Wild and Scenic Rivers			
State Natural, Scenic or Recreational Rivers			
Nationwide Rivers Inventory (NRI) listed			
Outstanding Rivers List for Indiana			
Navigable Waterways			

Remarks:

The United States Geological Survey (USGS) Quadrangle map shows three unnamed tributaries (UNT's) to the Ohio River within the project limits. The Ohio River is approximately 550 feet south of the project. Please see the attached USGS Quadrangle map and ground level photographs located in Appendix A.

A Waters of the U.S. Report was completed for the project in November 9, 2015 (September 24, 2015 site visit) by United Consulting and was approved by INDOT's Environmental Services, Ecology and Waterway Permitting on January 7, 2016. UNT #1 and UNT #2 to the Ohio River, which are likely jurisdictional, are located within the project limits. The report did not identify any other streams, rivers, or jurisdictional ditches within the limits of the project. The jurisdictional opinions were determined using the May 30, 2007 "U.S. Army Corps of Engineers (USACE) Jurisdictional Determination Form Instructional Guidebook" and the 2011 USACE "Draft Guidance on Identifying Waters Protected under Clean Water Act". All drainages that displayed a defined channel and ordinary high water mark (OHWM) were considered a stream. Please see the Waters of the U.S. Report, which begins on Appendix F, F-1.

UNT #1 to Ohio River currently flows southeast under SR-56 via 79.5 feet of 60 inch corrugated metal pipe (CMP) and under Second Street/US 421 via 255 feet of a historic stone box culvert of varying size. No work to this structure will be required. Additionally, no work below the OHWM of UNT #1 will be required to construct this project.

UNT #2 to Ohio River currently flows under SR-56 via 73 feet of 3 feet by 6 feet box culvert. No work to this structure will be required. Additionally, no work below the OHWM of UNT #2 will be required to construct this project.

In response to the early coordination letter, the Indiana Department of Natural Resources (IDNR DFW) provided several recommendations in a letter dated June 1, 2017 (Appendix B, B-7 to B-8) to reduce impacts to the UNTs to the Ohio River floodways. Recommendations applicable to this project that will be addressed in the project design and specifications include: development and implementation of erosion control measures both during and post-construction including re-vegetation of bare areas and stream bank restoration; seasonal fish spawning restrictions; minimum riprap size recommendations; and general measures to minimize channel disturbance. All of IDNR DFW's commitments are located in Section J, "Environmental Commitments". The Regulatory Assessment Section indicated this project may require formal approval for construction in a

floodway pursuant to the Flood Control Act (IC 14-28-1), for any proposal to construct, excavate, or fill in or on the floodway of a stream or other flowing waterbody which has a drainage area greater than one square mile. The project will not involve construction within the floodway of the Ohio River.

The project falls within the U.S. Fish and Wildlife Service (USFWS) Interim Policy for the Review of Highway Transportation Projects in Indiana (5-29-2013). The USFWS list of standard recommendations apply to this project and are included in Section J, "Environmental Commitments".

Early coordination was initiated on May 2, 2017 with the mailing of an early coordination letter to resource agencies and public officials containing information and seeking comment about the proposed project. A list of early coordination recipients can be found on Appendix B, B-6. The USACE and USFWS did not respond to the early coordination letter.

Other Surface Waters	**Presence**	**Impacts Yes**	**Impacts No**
Reservoirs			
Lakes			
Farm Ponds			
Detention Basins			
Storm Water Management Facilities			
Other:			

Remarks: A September 24, 2015 site visit by United Consulting verified that no other surface waters are located within the limits of the project. This was also verified by reviewing aerial photographs of the project area. Please see the aerial photograph map and ground level photographs located in Appendix A.

	Presence	**Impacts Yes**	**Impacts No**
Wetlands			

Total wetland area: N/A acre(s) Total wetland area impacted: N/A acre(s)

(If a determination has not been made for non-isolated/isolated wetlands, fill in the total wetland area impacted above.)

Wetland No.	Classification	Total Size (Acres)	Impacted Acres	Comments
N/A	N/A	N/A	N/A	N/A
N/A	N/A	N/A	N/A	N/A

Wetlands (*Mark all that apply*)	**Documentation**	**ES Approval Dates**
Wetland Determination	X	January 7, 2016
Wetland Delineation		
USACE Isolated Waters Determination		
Mitigation Plan		

Improvements that will not result in any wetland impacts are not practicable because such avoidance would result in (Mark all that apply and explain):

Substantial adverse impacts to adjacent homes, business or other improved properties; ☐

Substantially increased project costs;	
Unique engineering, traffic, maintenance, or safety problems;	
Substantial adverse social, economic, or environmental impacts, or	
The project not meeting the identified needs.	

Measures to avoid, minimize, and mitigate wetland impacts need to be discussed in the remarks box.

Remarks: No wetlands were identified on the National Wetlands Inventory map within the project limits. Please see Appendix A, A-6 for a copy of the National Wetlands Inventory Map. No wetlands or potential wetland areas were observed in or near the project area during a field investigation by United Consulting on September 24, 2015. A waters of the U.S. Report prepared by United Consulting documents that no wetlands were observed within the project limits. This report was approved by INDOT Environmental Services, Ecology and Waterway Permitting on January 7, 2016. A copy of the Waters of the U.S. Report is located in Appendix F.

Early coordination for this project was initiated on May 2, 2017 with the mailing of an early coordination letter. The IDNR DFW did not provide specific comments in regards to wetlands during early coordination, other than to say impacts should be mitigated at the appropriate ratio according to the 1991 INDOT/IDNR/USFWS Memorandum of Understanding. The project falls within the USFWS Interim Policy for the Review of Highway Transportation Projects in Indiana (5-29-2013). The USFWS list of standard recommendations apply to this project. The USACE did not respond to the early coordination letter. Please see Appendix B for the early coordination response letters.

	Presence	Impacts Yes	Impacts No
Terrestrial Habitat	X	X	
Unique or High Quality Habitat			

Use the remarks box to identify each type of habitat and the acres impacted (i.e. forested, grassland, farmland, lawn, etc).

Remarks: Land uses along the project corridor are primarily commercial and residential. Several habitat types were identified along the US 421 corridor and are evaluated in the table below:

Land-Use	Impact (Acres) includes existing right-of-way	Habitat
Commercial and Residential	0.70 acre	Mowed lawns and grasses
Riparian Forest	0.35 acre	Forested area along stream corridor

The project will primarily impact commercial and residential land uses. The project will result in the loss of vegetated lawn areas. Additionally, a small amount of riparian forest adjacent to UNT#1 and UNT#2 to the Ohio River will be cleared by this project. Most of these losses will occur where US 421 is constructed on new alignment, north of Second Street. Loss of vegetated lawn areas and riparian forest have been minimized to only what is needed for the construction of the project. A much larger area of forested habitat is located north of the project. This area will not be impacted by the project. As a result, losses from the project will not cause substantial impacts to terrestrial habitat in the vicinity of the project.

TERRESTRIAL ECOLOGY: The following terrestrial ecologic or evidence of terrestrial ecologic features were observed during a June 13, 2017 site visit by United Consulting. A summary of the species observed during the site visit is provided below:

Flora - Fescue, spruce trees, and other ornamental species.

Fauna - Squirrels and other common terrestrial birds and mammals.

Early coordination was initiated on May 2, 2017 with the mailing of an early coordination letter to resource agencies and public officials containing information and seeking comment about the proposed project. A list of early coordination recipients can be found on Appendix B, B-6.
In response to early coordination, the IDNR DFW provided a response letter dated June 1, 2017 (Appendix B, B-7 to B-8). The letter contained several recommendations to reduce impacts to habitat and wildlife resources. Recommendations applicable to this project that will be addressed in the project design and specifications include: development and implementation of erosion control measures during construction, and re-vegetation of bare areas with a mixture of grasses (excluding all varieties of tall fescue). All of IDNR DFW's recommendations are located in Section J "Environmental Commitments".

If there are high incidences of animal movements observed in the project area, or if bridges and other areas appear to be the sole corridor for animal movement, consideration of utilizing wildlife crossings should be taken.

Karst	**Yes**	**No**
Is the proposed project located within or adjacent to the potential Karst Area of Indiana?		X
Are karst features located within or adjacent to the footprint of the proposed project?		X
If yes, will the project impact any of these karst features?		

Use the remarks box to identify any karst features within the project area. (Karst investigation must comply with the Karst MOU, dated October 13, 1993)

Remarks: The project is located outside of the designated Karst area of the state as identified in the October 13, 1993 Memorandum of Understanding (MOU) between INDOT, IDNR, the Indiana Department of Environmental Management (IDEM), and USFWS. No karst features are known to exist within the limits of the project.

Threatened or Endangered Species	**Presence**	**Impacts Yes**	**Impacts No**
Within the known range of any federal species	X		X
Any critical habitat identified within project area			
Federal species found in project area (based upon informal consultation)			
State species found in project area (based upon consultation with IDNR)			

	Yes	**No**
Is Section 7 formal consultation required for this action?		X

Remarks: The project is within the range of the federally endangered Indiana bat (*Myotis sodalis*) and the federally threatened northern long-eared bat (*Myotis septentrionalis).* A review of the USFWS database by INDOT's Hazardous Materials Unit did not indicate the presence of endangered bat species in or within 0.5 mile of the project area.

The following federally endangered or threatened species are known to occur within Jefferson County.

Epioblasma triquetra	Snuffbox	Federally Endangered
Plethobasus cyphyus	Sheepnose	Federally Endangered
Myotis sodalis	Indiana bat	Federally Endangered
Myotis septentrionalis	Northern long-eared bat	Federally Endangered

The project area does not contain suitable habitat for any of the federally listed mussel species shown in the table above. As a result, no impacts are anticipated.

A field inspection by United Consulting on June 13, 2017 saw no bats or evidence of bats at the project site. Preparation of the Scoping Sheet for the Indiana bat and northern long-eared bat Range-Wide Programmatic Informal Consultation was completed (Appendix J, J-3 to J-8). The Scoping Worksheet for the Indiana bat and northern long-eared bat Range-Wide Programmatic Informal Consultation and Project Submittal Form were transmitted to the USFWS on September 26, 2017. No response was received from the USFWS. Based on the IDNR DFW database review and the USFWS Scoping Worksheet, the proposed project may affect, but is not likely to adversely affect, the Indiana bat and Northern long-eared bat, provided the required Avoidance and Minimization Measures (AMMs) are incorporated into the project. The project will have no effect on other federally or state endangered, threatened or rare species. The project will have no effect on designated critical habitat.

The AMMs are listed below and on Appendix J, J-3 to J-8. The AMMs are also located in Section J "Environmental Commitments".

1. If the goal of the project is to exclude bats, coordinate with the local Service Field Office and follow Acceptable Management Practices for Bat Control Activities in Structures guidance document.

2. Perform any structure maintenance and/or repair work during the winter hibernation period unless a hibernating colony of bats is present.

3. If maintenance and/or repair work will be performed outside of the winter hibernation period, determine if work will occur in an area with roosting bats. If there is observed bat activity (or signs of frequent bat activity), Transportation Agencies/State DOTs will conduct maintenance activity or similar structure alteration when bats are not present (e.g., foraging) or in a manner that will not disturb them.

4. If roosting bats or signs of roosting bats are observed Transportation Agencies/State DOTs will avoid removing the structure. NOTE: If there are concerns about human health/safety/property, coordinate with a nuisance wildlife control officer and the local Service Field Office.

5. Modify all phases/aspects of project (e.g. temporary work areas, alignments) to the extent practicable to avoid tree removal in excess of what is required to implement project safely.

6. Apply time of year restrictions for tree removal when bats are not likely to be present.

7. Ensure tree removal is limited to that specified in project plans. Install bright orange flagging/fencing prior to any tree clearing to ensure contractors stay within clearing limits. Ensure that contractors understand the clearing limits and how they are marked in the field.

8. Avoid cutting down documented Indiana bat and NLEB roosts that are still suitable for roosting or documented foraging habitat *at any time of year*. Avoid cutting down trees within 0.25 miles of documented roosts *at any time of year*. Ensure that suitable roosts remain on the landscape rather than focusing on general forest loss.

In an early coordination response letter dated June 1, 2017 (Appendix B, B-7 to B-8), the IDNR DFW indicated that the Natural Heritage Program database was checked. The following species were documented within ½ mile of the project area:

1) Barn Owl (*Tyto alba*), state endangered
2) Peregrine Falcon (*Falco peregrinus*), state special concern
3) Ohio Pigtoe (*Pleurobema cordatum*), state special concern

In the June 1, 2017 early coordination response letter, the IDNR DFW said the following: "The project area does not provide suitable habitat for barn owls; however, peregrine falcons (*Falco peregrinus*) have been nesting on Milton-Madison bridge in a nest box since 2002, but the nest box was moved from the Indiana side to the Kentucky side of the bridge. Therefore, since work will be conducted only on the Indiana side, we do not foresee any impacts to the peregrine falcons as a result of this project".

Regarding migratory birds, the IDNR DFW had the following comment: "If trees and shrubs are removed for expansion of the right-of-way, then there may be significant negative effects on migratory birds that are federally protected by the Migratory Bird Treaty Act of 1918. IDNR DFW recommended that either:

1) The area be surveyed for nesting birds and monitored to make sure that any active nests are not disturbed and work be completed after any active nest has failed or successfully fledged chicks; or

2) Work occurs in the fall and winter between early September to early March to avoid disturbing nesting bird species that breed in the spring and summer".

No active nests with nesting birds were identified during a June 13, 2017 site visit by United Consulting. All trees and shrub removal will occur in the fall and winter months between October 1 and April 1. This is also listed as a Firm Commitment in Section J "Environmental Commitments".

SECTION B – OTHER RESOURCES

	Presence	Impacts	
Drinking Water Resources		**Yes**	**No**
Wellhead Protection Area	X		X
Public Water System(s)	X		X
Residential Well(s)			

Indiana Department of Transportation

County Jefferson Route US 421 Des. No. 1400918

Source Water Protection Area(s)			
Sole Source Aquifer (SSA)			

If a SSA is present, answer the following:

	Yes	No
Is the Project in the St. Joseph Aquifer System?		
Is the FHWA/EPA SSA MOU Applicable?		
Initial Groundwater Assessment Required?		
Detailed Groundwater Assessment Required?		

Remarks: The project is not located in the St. Joseph Aquifer System, the only legally designated sole source aquifer in Indiana.

In a May 4, 2017 early coordination response letter (Appendix B, B-11), the IDEM – Groundwater Section indicated the proposed project is within a wellhead protection area. In a May 12, 2017 email, the City of Madison, Utilities Manager provided a five years of travel time exhibit showing the proposed project outside of this scenario (see Appendix B, B-12). Further coordination in regards to the wellhead protection area with the City of Madison, Utilities Manager will occur once construction limits have been finalized.

No other drinking water resources were identified within the limits of the proposed project during a September 24, 2015 site visit by United Consulting.

Flood Plains	**Presence**	**Impacts** Yes	**Impacts** No
Longitudinal Encroachment			
Transverse Encroachment	X	X	
Project located within a regulated floodplain	X	X	
Homes located in floodplain within 1000' up/downstream from project			

Discuss impacts according to classification system described in the "Procedural Manual for Preparing Environmental Studies".

Remarks: According to the guidelines listed in INDOT's Categorical Exclusion Manual (2013 version), this project will have a Category 2 Transverse encroachment upon the Ohio River regulated floodplain. A copy of the Flood Emergency Management Agency Flood Plain Map is located Appendix A, A-7. This project will not involve the replacement or modification of any existing drainage structures or the addition of any new drainage structures. As a result, this project will not affect flood heights or floodplain limits. This project will not increase flood risks or damage, and it will not adversely affect existing emergency services or emergency routes, therefore, it has been determined that this encroachment is not substantial.

Farmland	**Presence**	**Impacts** Yes	**Impacts** No
Agricultural Lands			
Prime Farmland (per NRCS)			

Total Points (from Section VII of CPA-106/AD-1006* _____

**If 160 or greater, see CE Manual for guidance.*

See CE Manual for guidance to determine which NRCS form is appropriate for your project.

Remarks: None of the land within the project limits meets the definition of farmland under the Farmland Protection Policy Act (FPPA). The Natural Resources Conservation Service indicated the project will not cause a conversion of prime farmland in a May 4, 2017 early coordination response letter

(Appendix B, B-9 to B-10). The requirements of the FPPA do not apply to this project. No additional alternatives in addition to those examined here will be considered without a re-evaluation of possible impacts to prime farmland.

SECTION C – CULTURAL RESOURCES

	Category	Type	INDOT Approval Dates	N/A
Minor Projects PA Clearance				X

Results of Research

	Eligible and/or Listed Resource Present
Archaeology	X
NRHP Buildings/Site(s)	X
NRHP District(s)	X
NRHP Bridge(s)	

Project Effect

No Historic Properties Affected [ ] No Adverse Effect [ ] Adverse Effect [X]

Documentation (mark all that apply)	Documentation Prepared	ES/FHWA Approval Date(s)	SHPO Approval Date(s)
Historic Properties Short Report			
Historic Property Report	X	January 26, 2016	February 24, 2016
Archaeological Records Check/ Review	X	October 14, 2016	November 18, 2016
Archaeological Phase Ia Survey Report	X	October 14, 2016	November 18, 2016
Archaeological Phase Ic Survey Report			
Archaeological Phase II Investigation Report			
Archaeological Phase III Data Recovery			
APE, Eligibility and Effect Determination	X	February 14, 2017	March 15, 2017
800.11 Documentation	X	February 14, 2017	March 15, 2017

		MOA Signature Dates (List all signatories)
Memorandum of Agreement (MOA)	X	FHWA - September 27, 2017 SHPO – September 14, 2017 INDOT – September 15, 2017 City of Madison – September 18, 2017 ACHP – October 5, 2017 **Concurring Parties** Indiana Landmarks – August 16, 2017 Historic Madison – August 18, 2017 Cornerstone Society, Inc. – August 31, 2017 Bob Canida – August 17, 2017

Describe all efforts to document cultural resources, including a detailed summary of the Section 106 process, using the categories outlined in the remarks box. The completion of the Section 106 process requires that a Legal Notice be published in local newspapers. Please indicate the publication date, name of paper(s) and the comment period deadline. Likewise include any further Section 106 work which must be completed at a later date, such as mitigation or deep trenching.

Remarks:

Area of Potential Effect (APE):

The Area of Potential Effects (APE) for this project includes properties adjacent to or near the limits of the preliminary study area. The preliminary study area encompasses the footprint of the alternatives carried forward that meet purpose and need. The APE is bound approximately by St. Michael's Avenue to the west, East Third Street to the north, Ferry Street to the east, and Vaughn Drive to the south. The APE for archaeological resources is defined as the entirety of any parcel located within or partially within the footprint of the preferred alternative.

Coordination with Consulting Parties:

On October 9, 2015 the agencies and local organizations listed below were invited to become Section 106 consulting parties. The Federal Highway Administration (FHWA), Indiana Department of Transportation (INDOT), and Indiana State Historic Preservation Officer (SHPO) are always consulting parties (CPs) for federally funded transportation projects. The organizations that accepted the invitation are identified below.

Federal Highway Administration (FHWA)
Indiana State Historic Preservation Officer (SHPO)
Indiana Department of Transportation (INDOT)
Nathan Adams, resident;
Bob Canida, resident;
Jefferson County Historical Society;
Patrick Cunningham, resident;
National Park Service (NPS);
Camille Fife, resident;
Madison Main Street Program;
Madison Historic District Board of Review;
Cornerstone Society;
Tracey Keller, resident;
Wayne Kyle, resident;
Advisory Council on Historic Preservation (ACHP);
Link Ludington, resident;
National Trust for Historic Preservation;
Indiana Landmarks—Southern Regional Office;
Historic Madison Foundation;
Steven and Elizabeth Thomas, residents;
Judith Wolf (resident);
Vickie Young, resident;
Jefferson County Historic Preservation Council;
Jefferson County Historian;
United Keetoowah Band of Cherokee Indians;
Absentee Shawnee Tribe of Oklahoma;
Eastern Shawnee Tribe of Oklahoma;
Red Cliff Band of Lake Superior Chippewas;
Grand Traverse Band of Ottawa and Chippewa Indians, Michigan;
Chippewa-Cree Indians of the Rocky Boy's Reservation (Chippewa-Cree Tribe);
Saginaw Chippewa Tribe of Michigan;

Miami Tribe of Oklahoma;
Peoria Tribe of Indians of Oklahoma;

A detailed description of consulting party coordination is located in Appendix C of this document. Numerous meeting were held with consulting parties. A summary of the meetings is provided below.

A consulting parties meeting was held December 3, 2015, at the Clifty Falls Inn in Clifty Falls State Park, Madison, Indiana. The meeting discussed the project in general, noting that it was early in the process. The prior study for the Milton-Madison Bridge Project initially included this approach but it was later eliminated from the project. It was noted that the prior study is a few years old and this study is starting with a blank slate. Weintraut & Associates, Inc. (W&A) discussed that historic and archaeological studies would occur but noted no reports had yet been produced. It was also explained that the W&A archaeologist had completed a records search of those resources within a one-mile radius and that pending the selection of the preferred alternative, an archaeological field reconnaissance may be necessary. Consulting parties discussed the importance of US 421 as "gateway" into Madison and the current adverse conditions due to truck traffic. The group also discussed and commented on the importance of the area as a cohesive neighborhood or district. Regarding impacts to historic resources, consulting parties said that the National Historic Landmark (NHL) could not be impacted. Chippewa-Cree Indians of the Rocky Boy's Reservation, noted there are tribes with a demonstrated interest in this area prior to the Indian Removal Act. The Ohio River is one example of a resource important to the Chippewa-Cree and others. They asked for more content during consulting party meetings about archaeological resources within the project area. The group also discussed whether the APE should expand or contract based on the alternative. The meeting concluded with a request for consulting parties to identify resources that they felt are so important to the community that they should not be impacted. A resident (consulting party) said that the entire NHL is important as a whole. In summing up the meeting, W&A noted that those at the meeting had expressed concerns over the present US 421 and the impact that it has on individual resources. Impacts include: drainage, noise, vibrations, and a situation that inhibits walkability and the cohesiveness of neighborhoods. The consulting parties expressed a desire for a project that is pedestrian friendly and honors the NHL and the working-class character of the east side of Madison. The entrance is important to the community.

After the meeting, National Park Service (NPS) sent an email to the project team and consulting parties discussing Section 110 of the National Historic Preservation Act.

A public information meeting was held later the same day, also at Clifty Falls Inn. At that meeting, attendees shared information with W&A about cultural resources within the APE and Madison, including the presence of an underground culvert beneath Harrison Street and the reported location of a burial ground (possibly Native American) at Ferry Street near Park School. Attendees also shared information on specific resources in the APE and offered suggestions or sources for further research.

A second consulting parties meeting was held February 16, 2016, at the Ivy Tech campus in Madison, Indiana. The NPS stated that the Indiana Historic Sites and Structures Inventory (IHSSI) numbers used in the report should be removed from the discussion of the NHL, since the designations of "Notable" and "Outstanding" do not apply to the NHL. The NPS stated all

captions should be removed from the photographs of the NHL. The NPS also stated that Section 110 was not mentioned in the HPR.

A third consulting parties meeting was held on August 11, 2016, in the City Center. The invitation to the consulting parties meeting had been sent to all who had previously accepted consulting party status as well as property owners of contributing resources in the APE. The purpose of the day-long consulting parties meeting was to discuss the project alternatives, Section 4(f) resources, the status of the effects study and archaeological investigations, and mitigation ideas. The meeting also included a walking tour showing project activities under the alternatives carried forward.

After the meeting the group asked questions about the alternatives, including information about grade changes, signal installation and noise and vibration studies. Following the walking tour, the discussion turned toward Section 106, Section 110, and Section 4(f). Consulting parties asked if any of the resources would be subject to "constructive use." Following a discussion of the alternatives, consulting parties asked about adding limestone to the bridge under Alternative 4, the height of limestone walls under Alternatives 4 and 6, and potential drainage issues. The representative for NPS revisited the discussion of noise increases at fourteen homes under Alternative 4 and requested additional information when the noise analysis was available. It was also noted by another party of that the Fulton community began at the corporation limit lines of Madison and another party asked about the traffic noise associated with a bridge versus on the ground.

The meeting broke into groups to discuss mitigation options. Themes that emerged from these smaller discussions were:

- Landscaping (and removal of billboards—billboards might be local) Landscaping should account for engineering, drainage, and artistry. Landscaping as gateway. Some called for terracing of retaining walls,
- Signalized intersection (on-demand) for pedestrian and bicycle traffic across Harrison Street/US 421,
- Creation of an Advisory Team that includes a mix of representatives including artists, and could include some consulting parties,
- Avoidance or treatment of the red house on Sering Street (106/112 Sering Street), and
- Pedestrian and bicycle access.

A public open house was held on August 15, 2016 in the City of Madison. On August 19, 2016, SHPO provided comments on the meeting and memorandum of the "Effects of the US 421 New Road Project" (letter dated June 28, 2016). SHPO agreed that Alternatives 4 and 6 would cause adverse effects but that Alternative 6 "is less likely to have as severe an overall impact on the Madison [NHL] District or Madison [NRHP] District."

A conference call to discuss the mitigation stipulations was held on March 9, 2017 with consulting parties. The meeting discussed the adverse effect in general and the stipulations proposed to mitigate the adverse effect. Conference call meeting minutes can be found in Appendix C.

During the March 9, 2017 conference call, INDOT agreed to investigate relocating the house at 106/112 Sering Street to another location within Madison. An investigation into the possibility of

relocating the house, especially the cost associated with moving the house at 106/112 Sering Street was conducted. Quotes were obtained from two independent house moving companies to develop the house relocation costs. Available city appraising data was used to estimate the land cost for the move, and RSM Means (2016), a published industry cost estimating handbook was utilized to estimate the remaining costs associated with relocating the structure.

A conference call to discuss the mitigation stipulations was held on July 11, 2017 with consulting parties. The purpose of the call was to discuss the MOA and other documents that had been uploaded to INSCOPE on June 27, 2017. The consulting parties discussed funding additional historic preservation staff for the City of Madison, the historic advisory committee, and relocation cost estimates associated with 106/112 Sering Street. A summary of the conference call was issued on July 17, 2017 and is located in Appendix C, C-242 to C-244.

Archaeology:

An archaeological reconnaissance occurred on May 11, 2016 within the footprint of the undertaking (approximately 5.46 acres). Thirteen archaeological sites were identified as a result of the undertaking. Six of the 13 sites contain historic features or possible intact deposits that may yield information important to the NRHP or the NHL. Two sites (12JE0551 and 12JE0553) were recommended for Phase Ib intensive survey. Site 12JE0549 was recommended for Level III documentation per the Historic American Landscape Survey (HALS) and Sites 12JE0552, 12JE0553, 12Je0555, and 12JE0561 were recommended for Level III documentation per the Historic American Engineering Survey (HAER). The report also recommended a firm commitment and special provision in the construction documents to contact INDOT-Cultural Resources Office (INDOT-CRO) if historic features are encountered during construction.

On October 19, 2016, W&A sent the Phase Ia Records Check and Reconnaissance Report (approved by INDOT-CRO on October 14, 2016) to the SHPO and notified the Tribal Historic Preservation Officer (THPO)s who had accepted the invitation to consult, of its availability on the INDOT's IN-SCOPE website.

On November 18, 2016, the SHPO concurred with the findings of the Phase Ia Records Check and Reconnaissance Report. Two sites will require a Phase Ib "unless they can be avoided by construction activities" and five sites will require additional archival research and photo documentation. "If any prehistoric or historic archaeological artifacts or human remains are uncovered during construction, demolition, or earthmoving activities, state law (Indiana Code 14-21-1-27 and -29) requires that the discovery be reported to the Department of Natural Resources." The letter further reminded that federal and state regulations and statues must be followed.

Historic Properties:

W&A which is included as a Qualified Professional (QP) satisfying the *Secretary of Interior's Professional Qualification Standards*, produced a Historic Property Report (HPR). In that report, W&A identified the Madison, Indiana NHL Historic District and the Madison NRHP Historic District as present within the APE.

Madison NRHP Historic District – The Madison NRHP Historic District contains more than 2,200 resources and was listed in 1973. At the time of the nomination, the Madison NRHP Historic District was recognized for having significance in the areas of architecture, commerce, and transportation. The district is also significant in the areas of industry and recreation. The district's period of significance begins in 1806 and extends to 1970, for the purposes of this study.

Madison, Indiana NHL District – The NHL, designated as such in 2006, contains 1,695 Contributing resources and 401 Non-Contributing resources. The NHL is significant under the thematic framework of "Expressing Cultural Values" as Madison "embodies the distinguishing characteristics of nearly all popular architectural styles from the early nineteenth to early twentieth centuries as demonstrated in a small river town." It is also significant under the thematic framework of "Creating Social Institutions and Movements." Specifically: "the community of Madison was integrally involved in the mid-nineteenth century national issues of Abolitionism, the Underground Railroad, and the growth of African-American communities." The period of significance is circa 1817 to circa 1939.

W&A sent a letter (dated January 25, 2016 and emailed on January 26, 2016) conveying the HPR and inviting all consulting parties and agencies to the second consulting party meeting to be held on February 16, 2016. The HPR was sent on CD to Native American Tribes on January 27, 2016.

The National Park Service, Indiana Department of Natural Resources and Indiana Landmarks Foundation provided comments in regards to the rating system used for properties evaluated in the HPR. A copy of their response letters can be found in Appendix C.

Documentation, Findings:

The preferred alternative is an "at-grade" alignment. US 421 would remain on the existing north-south Harrison Street alignment with a widened intersection and turning radii at Sering/Main Street. Buildings and land between Second and Sering/Main Streets would be acquired so that the new US 421 roadway would begin the new alignment portion of the undertaking north of the north side of Second Street and it would tie into existing roadway at Sering/Main Street. Second Street/SR-56 will contain a stop and a new traffic signal at its intersection with US 421 (Harrison Street). The 15- to 20-foot grade change between Second and Sering/Main would require a retaining wall along the north side of US 421. SR-56 would become an access road east of the intersection where US 421 ties in with Sering/Main Street.

The undertaking will adversely affect the Madison NRHP Historic District and the Madison, Indiana, NHL District. On February 14, 2017, the FHWA issued an Adverse Effect finding for impacts to the Madison NRHP Historic District and the Madison NHL Historic District (see Appendix C, C-1). The SHPO concurred with this determination in a March 15, 2017 review letter (see Appendix C, C-236 to C-238). No other responses were received in regards to the Adverse Effect finding.

Madison NRHP Historic District (1973)

By changing the path and grade of US 421 (which follows a nineteenth century roadway), introducing retaining walls, and creating a cul de sac at SR-56, which also follows a nineteenth century roadway, this alternative has an impact on the "concentration, linkage, or continuity of

sites, buildings, structures, or objects united historically or aesthetically by plan or physical development."

The preferred alternative will require the acquisition of 2.18 acres of temporary/permanent right of way (ROW) from the Madison NRHP Historic District and 6 relocations.

Madison, Indiana NHL District (2006)

By changing the grade and path of US 421 (which follows a nineteenth century roadway) and introducing retaining walls and by altering the route of SR-56, which also follows the path of a nineteenth century roadway, this alternative has an impact on the "concentration, linkage, or continuity of sites, buildings, structures, or objects united historically or aesthetically by plan or physical development" of the historic street plan.

The preferred alternative will require the acquisition of 1.53 acres of temporary/permanent ROW from the NHL Historic District and 6 relocations.

Memorandum of Agreement (MOA)

In an effort to mitigate the finding of Adverse Effect, a MOA was established between the FHWA, SHPO, ACHP, INDOT, and the City of Madison. The MOA was developed in discussion with consulting parties through meetings and correspondence. All of the stipulations contained in the MOA are firm project commitments. A copy of the executed MOA is located on Appendix I, I-61 to I-89. The MOA contains the following mitigation measures:

I. PROFESSIONAL QUALIFICATIONS

A) In consultation with the Indiana SHPO, INDOT shall ensure that all work performed pursuant to this MOA is performed or supervised by a qualified individual and/or team(s) that meet the Secretary of the Interior's Professional Qualification Standards as outlined in Appendix A to 36 CFR 61 for history, archaeology, architectural history, architecture, and/or historic architecture, as appropriate.

B) The individual and/or team(s) performing or supervising the archaeology investigations shall have supervisory experience in the prehistoric and historic archaeology of the southeastern Indiana region. All work performed or supervised by such person or persons shall be conducted pursuant the provisions of Indiana Code14-21-1, 312 Indiana Administrative Code 21, 312 Indiana Administrative Code 22,and the most current "Guidebook for Indiana Historic Sites and Structures Inventory-Archaeological Sites."

II. MITIGATION MEASURES

A) The FHWA and INDOT, in recognition of the significance of Madison as a National Historic Landmark, shall consider and, wherever feasible, shall implement a design with elements that best reflect the historic fabric and incorporate facets of the historic landscape of the Madison NRHP Historic District and the Madison NHL Historic District including but not limited to protecting existing character-defining

landscape features, both cultural and natural, and dealing with light, sound, and air quality issues.

B) As soon as practical, FHWA and INDOT (and/or their consultants) will convene a Historic Preservation Advisory Committee ("Advisory Committee") to ensure that the Project is designed in a manner that respects the historic qualities, landscapes, buildings, and features in the Madison NRHP Historic District and the Madison NHL Historic District. Responsibilities of and participation on the Advisory Committee include the following:

1) Representatives of the following jurisdictions and organizations will be invited by FHWA to participate on the Advisory Committee, based upon their established geographic connection to or specific interest in the Madison NRHP Historic District and/or the Madison NHL Historic District, or expertise pertaining to the historic preservation area: selected representatives of the City of Madison and all consulting parties identified in Attachment B. Representatives from INDOT or the Indiana SHPO may participate in Advisory Committee meetings at their discretion.

2) As soon as practical, FHWA will convene the Advisory Committee for an initial organizational meeting to establish processes and procedures for the operation of the Advisory Committee and to select the number of and the dates of future meetings to ensure the timely completion of the project. The Advisory Committee will review plans, comment, and make specific recommendations regarding the Project design, scopes of work, and details for consideration by FHWA. Advisory Committee meetings will be held in Madison, Indiana; Advisory Committee members will have the opportunity to participate via teleconference upon request. The Advisory Committee will be chaired by a representative from INDOT or by a consultant. The chair will be responsible for convening meetings of the Advisory Committee, preparing and maintaining a summary of meetings, and preparing and submitting Advisory Committee recommendations to FHWA for consideration and action, in consultation with the Indiana SHPO.

3) The Advisory Committee will function in an advisory capacity to assist INDOT in developing Project design details to implement the measures stipulated in this MOA regarding the Madison NRHP Historic District and the Madison NHL Historic District.

4) INDOT and/or its consultants will provide project updates every other month to Advisory Committee members that will include new or altered project design details. This project update will be distributed to members via electronic mail. Additionally, INDOT and/or its consultants will provide any materials needed for review by the Advisory Committee at least fifteen (15) days before scheduled meetings. In addition to comments voiced in meetings, Advisory Committee members may provide written comments to the chair within fifteen (15) days following the scheduled meeting.

5) Specific design topics reviewed by the Advisory Committee shall include but are not limited to: pedestrian and non-motorized vehicle access; appropriate parking; the use of streetscape elements such as historically scaled lighting, contextually appropriate street fixtures, native landscape plantings, and as stipulated below in Stipulation II.D. and II.E., a context sensitive gateway feature and architecturally appropriate retaining walls.

6) Based on the comments provided by the Advisory Committee members, the chair will develop recommendations and submit them to FHWA and INDOT for consideration and action, in consultation with the Indiana SHPO.

7) FHWA shall have the authority for final approval of actions regarding the implementation of measures to avoid, minimize, or mitigate effects to the Madison NRHP Historic District and the Madison NHL Historic District.

C. INDOT shall salvage, where feasible, and the City of Madison shall store limestone removed from culverts, walls, and walks with the intent of incorporating such stone within the construction of the Project. If the limestone cannot feasibly be incorporated into this project, it shall be made available to residents of the Madison NRHP Historic District and the Madison NHL Historic District for use within those districts.

D. INDOT shall incorporate architecturally appropriate retaining walls in terms of height, scale, and aesthetic treatment into the design of the project. INDOT shall, where feasible, incorporate limestone salvaged from culverts, walls, and walks into the design of the retaining walls.

E. INDOT shall incorporate a context-sensitive gateway feature into the final construction of the project.

F. INDOT shall, where feasible, salvage architectural details from the home at 112 E. Sering Street and offer them for use in other residences in the NHL or NRHP. INDOT or its consultant will develop a Dispensation Plan; the Advisory Committee will have thirty (30) days to review and comment. INDOT or its consultant will oversee the dispensation of the salvaged architectural details. A report will be provided to FHWA and the Advisory Committee after all architectural details have been removed and dispensed.

G. The City of Madison will employ a Historic Preservation Officer for the purpose of seeking new opportunities to apply for grants and other assistance for use in improvements for the Madison NRHP Historic District and Madison NHL Historic District. The Historic Preservation Officer shall meet the qualifications specified in *The Secretary of the Interior's Historic Preservation Professional Qualification Standards, Federal Register, June 20, 1997*. The City may elect to receive reimbursement of $40,000.00 annually for a period of two (2) years or for $20,000.00 annually for a period of four (4) years. This reimbursement shall not exceed $80,000.00. This stipulation will be implemented through an INDOT Local Public Agency (LPA) agreement with the City of Madison.

H. INDOT shall reimburse the Historic Preservation Officer and the Madison Historic District Board of Review for activities and educational training for program members and employees. The reimbursement shall not exceed five thousand dollars ($5,000.00) per year and shall be applicable for two years.

I. INDOT shall monitor historic properties for potential construction and traffic vibration damage. Attachment C lists the properties where monitoring is scheduled to occur. A Vibration Monitoring Plan shall be developed and presented to the Historic Preservation Advisory Committee for a thirty (30) day review and comment period. The Plan shall include provisions for pre- and post-construction surveys, installation of vibration monitoring devices and visual inspection during construction. As appropriate, INDOT will observe the vibration monitors and make the determination as to whether vibration from construction and traffic could cause damage to historic properties. INDOT or its consultant shall provide regularly-scheduled reports to the Advisory Committee summarizing the results of the data generated by the monitoring devices.

1. If damage occurs as a result of Project activities, INDOT or their contractors shall be responsible for repair of any resulting vibration damage to historic properties. Any repairs will be coordinated in advance with the SHPO to ensure they are carried out in accordance with *The Secretary of the Interior's Standards for Rehabilitation and Guidelines for Rehabilitating Historic Buildings* ("Secretary's Standards"). Where access to privately owned property is necessary for monitoring or damage repair, consent shall be obtained prior to entry. If access is denied, a good faith effort shall be made by INDOT to identify an alternative historic property nearby for monitoring that is likely to experience similar impacts.

2. Construction activities shall occur in accordance with local noise regulations, policies, and guidance to minimize adverse noise effects.

3. INDOT shall require the contractor to obtain all necessary permitting to allow oversize vehicles or heavy loads to access the Project site. INDOT's standard specifications state that the contractor must confirm allowable routing with the local government if they are going to use local roads.

4. INDOT shall ensure that the contractor utilize a Traffic and Parking Management Plan for maintenance of traffic during construction that is sensitive to the historic districts and makes practical and reasonable efforts to minimize impacts to historic districts.

5. INDOT shall include provisions in their contract that limit construction activities and construction noise during special events. INDOT, with input from the City of Madison, shall identify the special events for which these provisions apply.

III. TREATMENT OF ARCHAEOLOGICAL RESOURCES

A. Statutory and Regulatory Standards

1. The studies completed pursuant to Stipulation III.E. shall demonstrate level of effort consistent with the 36 C.F.R. part 800 regulations in effect on the date upon which the last of the required signatories has signed this MOA and provide FHWA with the information to determine, in consultation with the Indiana SHPO, which archaeological properties are eligible for inclusion in the NRHP. FHWA shall acknowledge and seek the special expertise of any federally recognized Indian Tribes which have previously entered into consultation in assessing the eligibility of historic properties that may possess religious and cultural significance to them.

2. In implementing Stipulation III.A through III.G., INDOT may consult with the consulting parties listed in Attachment B and others identified in accordance with the 36 C.F.R. part 800 regulations in effect on the date upon which this MOA is fully executed.

3. In accordance with Section 304 of the NHPA and the 36 C.F.R. part 800 regulations in effect on the date upon which this MOA is fully executed INDOT and its consultants, shall ensure that sensitive information regarding the nature and location of human remains and grave goods, and the location, character, and ownership of archaeological sites is kept confidential from the public.

4. In ensuring that any human remains and grave goods identified are treated in a sensitive, respectful, and careful manner, INDOT shall be guided by the Council's "Policy Statement Regarding Treatment of Human Remains and Grave Goods" (February 23, 2007) and the Native American Graves Protections and Repatriation Act ("NAGPRA") regulations set forth in 43 C.F.R. part 10, and other guidelines as appropriate.

5. If any human remains are encountered during the project, work shall cease in the immediate area and the human remains left undisturbed. INDOT shall contact the county coroner and law enforcement officials immediately, and the discovery must be reported to the Indiana SHPO within two (2) business days. The discovery must be treated in accordance with Indiana Code 14-21-1 and 312 Indiana Administrative Code 22. Work at this site shall not resume until a plan for the treatment of the human remains is developed and approved in consultation with the Indiana SHPO, the INDOT Cultural Resources Office, and any appropriate consulting parties.

6. Modification or modifications ("modifications") to the Project which fall outside of the archaeological APE, depicted in Attachment A, dated October 2016, shall be subject to archaeological identification and evaluation and assessment per Stipulations III.B. and III.C. If FHWA determines that the modifications have the potential to cause adverse effects on archaeological resources, then FHWA shall treat the

archaeological resource in accordance with Stipulation III.G. .

7. Any dispute regarding the report(s) shall be resolved in accordance with Stipulations IV.A.

B. Identification & Evaluation

1. Before commencing ground-disturbing activities in the Project archaeological APE for the Preferred Alternative, INDOT shall complete the identification and evaluation of archaeological properties contributing to the Madison Historic District and National Historic Landmark in accordance with applicable Federal and State standards and guidelines listed in Stipulations I and III.A.

2. INDOT shall prepare and distribute a final Identification and Evaluation report in accordance with Stipulations I and III.A.

3. Upon completion of the evaluation, FHWA shall follow the procedures set forth in the 36 C.F.R. part 800 regulations in effect on the date upon which this MOA is fully executed which shall include updated documentation described in those regulations, if it is determined that no historic properties shall be affected.

C. Assessment of Effects

1. Any dispute regarding the report(s) shall be resolved in accordance with Stipulations IV.A.

2. In consultation with the Indiana SHPO, federally recognized Indian Tribes that may ascribe traditional cultural and religious significance to affected properties, and other parties whom FHWA deems appropriate, FHWA shall determine if the Project shall adversely affect archeological properties determined eligible for inclusion in the NRHP pursuant to the 36 C.F.R. part 800 regulations in effect on the date upon which this MOA is fully executed.

3. If, in consultation with the Indiana SHPO, federally recognized Indian Tribes that may ascribe traditional cultural and religious significance to affected properties, and other parties whom FHWA deems appropriate, FHWA determines the Project may adversely affect NRHP-eligible archeological properties, then FHWA shall make reasonable efforts to avoid or minimize the adverse effect. If, after this consultation, FHWA determines it is not possible to avoid or minimize adverse effects, then FHWA shall treat the archaeological resource in accordance with Stipulation III.G. of the MOA.

4. Any dispute regarding the determination of effects on NRHP-eligible archaeological properties shall be resolved in accordance with applicable Federal and State standards and guidelines listed in Stipulation IV.A.

D. Avoidance

1. Consultation with the Indiana SHPO has determined that the following properties are within the Archaeology APE and must be avoided or subjected to archival research and photo documentation,: Sites 12JE0549, 12JE0552,12JE0553, 12JE0555, and 12JE0561.

2. Consultation with the Indiana SHPO has determined that Sites 12JE0551 and 12JE0553 within the Archaeology APE must be avoided or subjected to additional archaeological investigations. If avoidance is not feasible, INDOT will submit a plan for further archaeological investigations to the SHPO for review and comment and will follow the provisions in Stipulation III.E.

3. INDOT shall investigate a design that avoids Sites 12JE0549, 12JE0551, 12JE0552, 12JE0553, 12JE0555, and 12JE0561.

E. Additional Investigations

1. Where avoidance is not possible, all archaeological investigations shall be conducted according to applicable Federal and State standards and guidelines listed in Stipulations I and III.A.

2. To maximize the opportunity to avoid adverse effects, the required archaeological investigations shall be conducted as soon as practicable upon securing the appropriate rights to access property.

3. INDOT, in consultation with the Indiana SHPO, and other parties deemed appropriate by INDOT, shall take reasonable measures to avoid disinterment and disturbance to human remains and grave goods of religious and cultural significance to Native Americans, including investigations associated with modifications of the Project.

F. Documentation Standards

1. If Sites 12JE0552, 12JE0553, 12JE0555, and 12JE0561 cannot be avoided by construction activities, INDOT shall develop, or provide funding for a consultant to develop, Historic American Engineering Record (HAER) Level II documentation of Sites 12JE0552, 12JE0553, 12JE0555, and 12JE0561 for submittal to the Library of Congress. Level II requires a sketch plan, large format photographs and a narrative per HAER standards. The NPS shall review the work of the HAER documentation submitted by INDOT to ensure the work meets the required standard and format. INDOT and its consultants shall prepare the documentation for submission through the HAER Program to the Library of Congress in Washington, D.C.

2. If Site 12JE0549 cannot be avoided by construction activities, INDOT shall develop or provide funding for a consultant to develop Historic American Landscapes Survey (HALS) Level II documentation of Site 12JE0549 for submittal to the Library of Congress. Level II requires a sketch plan, large format photographs and a narrative per HALS standards. The NPS

shall review the work of the HALS documentation submitted by INDOT to ensure the work meets the required standard and format. INDOT and its consultants shall prepare the documentation for submission through the HALS Program to the Library of Congress in Washington, D.C.

G. Treatment

If FHWA, in consultation with the Indiana SHPO, federally recognized Indian Tribes that may ascribe traditional cultural and religious significance to affected properties, and other parties whom FHWA deems appropriate, determines that the adverse effect cannot be avoided or minimized, then FHWA shall develop and implement a Treatment Plan(s), as part of the above consultation, to mitigate the adverse effects to an archeological resource on a site-by-site basis. The implementation of the Treatment Plan(s) must be completed for each site prior to the initiation of any Project construction activities within a segment that could affect that site.

Public Involvement:

To meet the public involvement requirements of Section 106, FHWA's finding of "Adverse Effect" was advertised in the Madison Courier on July 1, 2017. The public comment period closed on August 1, 2017. The Publisher's Affidavit can be viewed at Appendix C, C-235. No comments were received by the published deadline.

With the execution of the MOA, the Section 106 process has been completed and the responsibilities of the FHWA under Section 106 have been fulfilled.

SECTION D – SECTION 4(f) RESOURCES/ SECTION 6(f) RESOURCES

Section 4(f) Involvement (mark all that apply)

	Presence	Use Yes	Use No
Parks & Other Recreational Land			
Publicly owned park			
Publicly owned recreation area			
Other (school, state/national forest, bikeway, etc.)			

	Evaluations Prepared	FHWA Approval date
Programmatic Section 4(f)*		
"De minimis" Impact*		
Individual Section 4(f)		

	Presence	Use Yes	Use No
Wildlife & Waterfowl Refuges			
National Wildlife Refuge			
National Natural Landmark			
State Wildlife Area			
State Nature Preserve			

	Evaluations Prepared	FHWA

Indiana Department of Transportation

County Jefferson Route US 421 Des. No. 1400918

		Approval date
Programmatic Section 4(f)*		
"De minimis" Impact*		
Individual Section 4(f)		

	Presence	Use Yes	Use No
Historic Properties			
Sites eligible and/or listed on the NRHP	X	X	

	Evaluations Prepared	FHWA Approval date
Programmatic Section 4(f)*		
"De minimis" Impact*		
Individual Section 4(f)	X	Pending

**FHWA approval of the environmental document also serves as approval of any Section 4f Programmatic and/or De minimis evaluation(s) discussed below.*

Discuss Programmatic Section 4(f) and "de minimis" Section 4(f) impacts in the remarks box below. Individual Section 4(f) documentation must be separate Draft and Final documents. For further discussions on Programmatic, "de minimis" and Individual Section 4(f) evaluations please refer to the "Procedural Manual for the Preparation of Environmental Studies". Discuss proposed alternatives that satisfy the requirements of Section 4(f).

Remarks:

Section 4(f) of the US Department of Transportation (USDOT) Act of 1966 states that USDOT-funded projects are prohibited from using land from certain properties unless there is no feasible and prudent alternative to the use of the Section 4(f) resource. The proposed action must also include planning to minimize harm to the property that would result from such use. The purpose of Section 4(f) is to protect historic sites and publicly owned park and recreation lands and wildlife and waterfowl refuges. The following paragraphs detail the Section 4(f) impacts associated with this project.

Section 4(f) Recreational

United Consulting completed a field review of the project area on September 24, 2015 and a Red Flag Investigation (RFI) on July 19, 2016 which was approved by INDOT's Hazardous Materials Unit on July 20, 2016. Jaycee Park is located 150 feet southwest of the project and Madison Riverwalk is located 250 feet south of the project. No restrictions in access during or after construction, parking or the acquisition of right-of-way will occur from either parcel. As a result, no Section 4(f) impacts are expected to occur to Jaycee Park or the Madison Riverwalk (Section 4(f) Recreational Areas). No parks, playgrounds, or other public recreational areas were identified in the project area. No wildlife reserves or waterfowl refuges were identified.

Section 4(f) Cultural

The Madison NRHP Historic District and Madison NHL Historic District are located within the project limits. Both resources are considered Section 4(f) properties. Historic properties are the only Section 4(f) properties identified within the project area. The Indiana State Historic Preservation Officer (SHPO), National Park Service (NPS) and Advisory Council on Historic Preservation (ACHP) are the officials with jurisdiction over these properties. Section 106 consultation performed to date indicates that all of these alternatives will result in an adverse effect upon the Madison NRHP Historic District and Madison NHL Historic District. The details of the Madison NRHP Historic District and Madison NHL Historic District are discussed in the cultural resources section above. The Madison NRHP Historic District overlaps most of the Madison NHL Historic District. A figure showing

the limits of each district can be found in Appendix C, C-30

A Section 4(f) evaluation was completed for this project in August 2017. The FWHA issued legal sufficiency in an October 2, 2017 letter. A copy of the letter is located in Appendix I, I-92. The issuance of a Finding of No Significant Impact (FONSI) will constitute FHWA approval of the 4(f) use. A copy of the Section 4(f) evaluation is included in Appendix I.

Consideration of Alternatives:

Prior to consideration of any alternative which results in the use of Section 4(f) property, Section 4(f) requires consideration of a reasonable range of feasible and prudent alternatives which avoid the use of Section 4(f) property, including the No-Build Alternative. Feasible and prudent avoidance alternatives are those that avoid using any Section 4(f) property and do not cause other severe problems of a magnitude that substantially outweigh the importance of protecting the Section 4(f) property.

If the evaluation of avoidance alternatives identifies a feasible and prudent alternative that would not result in the use of Section 4(f) property and does not cause other severe problems of a magnitude that substantially outweigh the importance of protecting the Section 4(f) property, Section 4(f) requires that it be selected as the Preferred Alternative.

If the evaluation of avoidance alternatives concludes that there is no feasible and prudent avoidance alternative, then, from among the alternatives that would use Section 4(f) property, the alternative that causes the least overall harm to Section 4(f) property may be approved. Nine preliminary build alternatives and a no-build alternative were evaluated. Each of the alternatives are described in the section entitled "Other Alternatives Considered" beginning on page 8 of this document.

Description of Alternatives Carried Forward for Section 4(f) Evaluation:

The only alternative that would avoid the use of a Section 4(f) property is the No-Build.

In addition to this avoidance alternative, three alternatives that would result in the use of both Section 4(f) properties (Madison NHL Historic District and Madison NRHP Historic District) have been considered. These consisted of:

1) Alternative 4 ("Grade-Separated") Alternative carrying US 421 north-south over Second Street. US 421 would be at-grade at the intersection with 1st Street. North of 1st Street, US 421 would be built up in order to bridge over Second Street and then would turn to intersect SR-56 between Main Street and Second Street, creating a "T" intersection. SR-56 would maintain its current alignment. The intersection of US 421 and SR-56 would be signalized. A graphic showing Alternative 4 is shown on Appendix J, J-57.

2) Alternative 6 ("At-Grade Alternative") utilizing the same geometrics as the previous alternative, US 421 would be at-grade at the intersection with 1st Street and Second Street. North of Second Street, US 421 would cut through the hillside as it turns to connect to Main Street at the Roosevelt Street/Main Street intersection. A graphic showing Alternative 4 is shown on Appendix J, J-59.

3) Alternative 8 ("Roundabout" Alternative) would carry traffic east to Ferry Street via a new terrain roadway and an "at grade" roundabout interchange. This alternative turns US 421 east

starting at the end of the Milton-Madison Bridge approach. US 421 would head east a little further north than the 1st Street alignment before turning northeast to tie in at the existing location of the SR-56/Ferry Street intersection. Due to the irregular intersection geometry, the intersection would be redesigned to be a single lane roundabout to better and more safely accommodate all approaches to the intersection. US 421 would then follow the existing SR-56 alignment to Main Street. A graphic showing Alternative 4 is shown on Appendix J, J-61.

To further evaluate the four primary alternatives, additional criteria, consistent with the project purpose and need, were outlined to enhance the alternative selection process and reflect the broader project goals and objectives. Since the reduction of environmental impacts of trucks through the corridor was such a large driver to the project initiation, both environmental considerations and freight movement became secondary criteria, subdivided into measurable criteria. Additionally, factors reflecting a need to support economic development opportunities by managing access and enhancing pedestrian connectivity were identified through municipal amenity and pedestrian access measures. Finally, while not a direct principle highlighted in the purpose and need, the importance of delivering the project was highlighted through *schedule implications* and *project cost* filters. These non-traffic related criteria were then evaluated by project leadership consisting of INDOT Project and Program Management, City of Madison Community Leaders and the consultant Project Team to ensure they reflected the purpose and need of the project.

Assessment of Least Overall Harm to Section 4(f) Properties by Remaining Alternatives:

Because the evaluation of avoidance alternatives concluded that there is no feasible and prudent avoidance alternative, an assessment of remaining alternatives to identify the alternative that causes the least overall harm to Section 4(f) property is required. To determine which of the alternatives would cause the least overall harm, the following seven factors set forth in 23 CFR 774.3(c)(l) must be balanced. The seven factors are listed below:

1) Ability to mitigate adverse impacts to each Section 4(f) property (including any measures that result in benefits to the property).

2) Relative severity of the remaining harm, after mitigation, to the protected activities, attributes, or features that qualify each Section 4(f) property for protection.

3) Relative significance of each Section 4(f) property.

4) The view of the officials with jurisdiction over each Section 4(f) property.

5) Degree to which each alternative meets the project purpose and need.

6) After reasonable mitigation, the magnitude of any adverse impacts to resources not protected by Section 4(f).

7) Substantial differences in costs among the alternatives.

A detailed discussion of the seven factors are included in the Section 4(f) Evaluation found in Appendix I. The seven factors set forth in 23 CFR 774.3(c)(l) were compared for the remaining alternatives under consideration (refer to table below). Alternative 6 ranks most favorably, relative

to the other alternatives, with regard to Section 4(f) property impacts, the ability to mitigate adverse effects, the relative severity of remaining harm after mitigation, views of the officials with jurisdiction, relative satisfaction of the stated project Purpose and Need, neighborhood cohesion impacts, relocations, right-of-way impacts, and CAC / public input. Based upon comparison of Section 4(f) impacts and other factors associated with the alternatives that would satisfy the project Purpose and Need, Alternative 6 results in the least overall harm to Section 4(f) property in light of the statute's preservation purpose. Therefore, this alternative is recommended to be the preferred alternative.

The Section 4(f) Evaluation concluded there are no feasible and prudent alternative to the use of land from the Madison NRHP Historic District and the Madison NHL Historic District. The proposed action includes all possible planning to minimize harm to each of the districts resulting from such use. The document was submitted to the Department of Interior for review on August 18, 2017. The NPS concurred with the Section 4(f) Analysis in a September 28, 2017 review letter. A copy of this letter is located in Appendix I, I-90 to I-91. The FWHA issued legal sufficiency in an October 2, 2017 letter. A copy of the letter is located in Appendix I, I-92. The issuance of a Finding of No Significant Impact (FONSI) will constitute FHWA approval of the 4(f) use.

Section 6(f) Involvement	**Presence**	**Use**	
		Yes	**No**
Section 6(f) Property			

Discuss proposed alternatives that satisfy the requirements of Section 6(f). Discuss any Section 6(f) involvement.

Remarks: No Section 6(f) resources were identified within or near the project area on the National Park Service Land and Water Conservation (LWCF) Fund Database (http://waso-lwcf.ncrc.nps.gov/public/index.cfm). The project will not involve any properties acquired by or improved with the LWCF. A copy the LWCF funded projects for Jefferson County is included in Appendix J, J-2.

SECTION E – Air Quality

Air Quality

Conformity Status of the Project	**Yes**	**No**
Is the project in an air quality non-attainment or maintenance area?		X
If YES, then:		
Is the project in the most current MPO TIP?		
Is the project exempt from conformity?		
If the project is NOT exempt from conformity, then:		
Is the project in the Transportation Plan (TP)?		
Is a hot spot analysis required (CO/PM)?		

Level of MSAT Analysis required?

Level 1a [ ] Level 1b [X] Level 2 [ ] Level 3 [ ] Level 4 [ ] Level 5 [ ]

Remarks:

This project is located in Jefferson County. Jefferson County is currently listed in attainment for all air pollutants. Therefore the conformity procedures of 40 CFR 93 do not apply.

The project's overall length is accurately reflected in the INDOT State Transportation Improvement Program (STIP) (Appendix J, J-1).

The purpose of the proposed project is to increase operational efficiency and traffic safety by relieving congestion at a series of 90-degree turns on US 421 between the Milton-Madison Bridge and Main Street, while reducing the environmental impacts associated with idling and braking of trucks. This project has been determined to generate minimal air quality impacts for Clean Air Act criteria pollutants and has not been linked with any special mobile source air toxic (MSAT) concerns. As such, this project will not result in changes in traffic volumes, vehicle mix, basic project location, or any other factor that would cause a meaningful increase in MSAT impacts of the project from that of the no-build alternative.

Moreover, Environmental Protection Agency (EPA) regulations for vehicle engines and fuels will cause overall MSAT emissions to decline significantly over the next several decades. Based on regulations now in effect, an analysis of national trends with EPA's MOVES2014 model forecasts a combined reduction of over 90 percent in the total annual emissions rate for the priority MSAT from 2010 to 2050 while vehicle-miles of travel are projected to increase by over 45 percent (Updated Interim Guidance on Mobile Source Air Toxic Analysis in NEPA Documents, Federal Highway Administration, October 12, 2016). This will both reduce the background level of MSAT as well as the possibility of even minor MSAT emissions from this project.

SECTION F - NOISE

Noise	**Yes**	**No**
Is a noise analysis required in accordance with FHWA regulations and INDOT's traffic noise policy?	X	

	No	**Yes/ Date**
ES Review of Noise Analysis		February 13, 2017

Remarks:

Because this activity is classified as a Type I project involving construction of a new roadway, a noise analysis was required per 23 CFR 772 and the INDOT Traffic Noise Policy (effective 07-13-2011). Crawford, Murphy & Tilly (CMT) completed a Traffic Noise Analysis dated January 30, 2017. INDOT issued technical sufficiency for the Noise Analysis on February 13, 2017. See Appendix E, E-1. As part of this Traffic Noise Analysis, receptors within 500 feet of (in both directions) were identified and modeled with the FHWA Traffic Noise Model (TNM) version 2.5. A copy of the Traffic Noise Analysis is located in Appendix E. The results of the Traffic Noise Analysis are summarized in the paragraphs below:

Traffic noise was evaluated at eight (8) common noise environments (CNE), and eight (8) receptors were chosen to represent the study area locations within the CNE's. Traffic noise levels were evaluated for the existing (2015) and projected (2040) traffic volumes for the No-Build and Build Alternatives. Based on this analysis, of the total 178 dwelling units within the eight (8) CNEs, there were two (2) dwelling units in CNE 1 and one (1) dwelling unit in

CNE 4 that would approach or exceed the NAC of 67 dB(A) under the Build Alternative scenario. For the three receptors experiencing a noise impact, the feasibility of constructing a noise barrier was analyzed. The INDOT Traffic Noise Analysis Procedure states that "…noise barriers require long, uninterrupted segments of barrier to be feasible. As such, if there are existing access points and/or driveways, it is not feasible to construct effective noise barriers for the roadway." Based on this analysis, it was determined that noise abatement using noise barriers would not be feasible due to existing driveway connections and intersecting streets that would not allow for an uninterrupted barrier. Therefore, based on the studies thus far accomplished, the State of Indiana has not identified any locations where noise abatement is likely. A reevaluation of the noise analysis will occur during final design. If during final design it is determined that conditions have changed such that noise abatement is feasible and reasonable, the abatement measures might be provided. The final decision on the installation of any abatement measure will be made upon the completion of the project's final design.

SECTION G – COMMUNITY IMPACTS

Regional, Community & Neighborhood Factors	**Yes**	**No**
Will the proposed action comply with the local/regional development patterns for the area?	X	
Will the proposed action result in substantial impacts to community cohesion?		X
Will the proposed action result in substantial impacts to local tax base or property values?		X
Will construction activities impact community events (festivals, fairs, etc.)?		X
Does the community have an approved transition plan?	X	
If No, are steps being made to advance the community's transition plan?	X	
Does the project comply with the transition plan? (explain in the remarks box)	X	

Remarks:

The preferred alternative is consistent with local land use plans developed by the City of Madison. No negative impacts to community cohesion are anticipated. This project will not have any significant short or long-term economic impacts.

The following festivals are held annually within the City of Madison:

River Roots Music & Folk Arts Festival	Third Weekend In May
Spring Old Court Days	Memorial Day Weekend
Lanier Civil War Days	Second Weekend In June
Madison Regatta	Independence Day Weekend
Madison Ribberfest BBQ & Blues	Third Weekend In August
Fall Old Court Days	Labor Day Weekend
Madison Chautauqua Festival of Art	Last Weekend In September
Soup, Stew, Chili & Brew	Second Saturday In October
Nights Before Christmas Candlelight Tour	Last Weekend In November
Christmas Parade	First Saturday In December

Access will be maintained to each of these events during construction. Additionally, early coordination was initiated on May 2, 2017 and with the mailing of an early coordination letter to resource agencies and public officials containing information and seeking comment about the proposed project. A list of early coordination recipients can be found on Appendix B, B-6. No impacts to community events were identified by local officials during early coordination.

Additionally, US 421 will remain open during construction. Sidewalks currently exist along the US 421 project corridor. As a result, the project complies with the approved ADA transition plan for Madison (Adopted 2013).

As part of the Memorandum of Agreement (MOA) executed during completion of the Section 106 process, an Advisory Committee shall be convened. INDOT shall ensure specific design topics reviewed by the Advisory Committee shall include but are not limited to: pedestrian and non-motorized vehicle access; appropriate parking; the use of streetscape elements such as historically scaled lighting, contextually appropriate street fixtures and native landscape plantings.

Indirect and Cumulative Impacts	**Yes**	**No**
Will the proposed action result in substantial indirect or cumulative impacts?		X

Remarks: There are no substantial indirect or cumulative effects resulting from the project. The proposed project does not add capacity to US 421. Additionally, the proposed project is not expected to result in new commercial, industrial, or residential developments.

Public Facilities & Services	**Yes**	**No**
Will the proposed action result in substantial impacts on health and educational facilities, public and private utilities, emergency services, religious institutions, airports, public transportation or pedestrian and bicycle facilities? *Discuss how the maintenance of traffic will affect public facilities and services.*	X	

Remarks: **Potential Impacts –** All public facilities and services will be notified in writing at least two weeks before construction begins. Impacts to any public facilities and services identified are as follows:

No health facilities, schools, religious institutions, public transportation facilities, trails or parks were identified within the limits of the project. However, health facilities, schools, religious institutions, trails and parks are located near the project. No direct impacts to these facilities are anticipated.

Public Utilities – Overhead power lines are present along US 421. Underground telephone, fiber optic, and gas were noted within the project limits.

The project will include coordination with utilities affected by the proposed construction in accordance with 105 IAC 13. This coordination will include a request to verify the location of the facilities owned by the utility after the survey is completed. Once the preliminary plans have been prepared, designers will work with the utilities to identify and resolve conflicts with the proposed construction and will review and approve the utility's proposed relocation plan.

Fire, Police, and Emergency Services – The proposed project is not expected to result in substantial impacts on fire, police, and emergency services. Any impacts will be temporary and will cease upon completion of the project. All emergency service units will be notified prior to construction to make them aware of the project and potential delays. Traffic will be maintained to all adjacent properties during construction.

Airports - The Madison Municipal Airport is located approximately 4.5 nautical miles northwest of the proposed project site and a hospital heliport is located approximately 0.5 miles from the project. No impacts to these facilities are expected.

Maintenance of Traffic - The maintenance of traffic plan will not result in substantial impacts on health and educational facilities, public utilities, fire, police, emergency services, religious institutions, public transportation, or pedestrian and bicycle facilities. Any impacts will be temporary and will cease upon completion of the project. The local fire department, police stations, emergency services, and schools will be updated periodically on construction and delays for their planning purposes. Public services such as police and fire protection will have improved access at the completion of the project.

Environmental Justice (EJ) (Presidential EO 12898)	**Yes**	**No**
During the development of the project were EJ issues identified?		X
Does the project require an EJ analysis?	X	
If YES, then:		
Are any EJ populations located within the project area?		X
Will the project result in adversely high or disproportionate impacts to EJ populations?		X

Remarks:

Title VI of the Civil Rights Act of 1964 and the subsequent legislation require federal agencies to ensure that none of their programs discriminate on the basis of race, color, national origin, age gender, handicap/disability and religion. The President's Executive Order 12898 on February 11, 1994 and the President's Memorandum on Environmental Justice (EJ) of the same date underscore these provisions with respect to Environmental Justice in Minority Populations and Low Income Populations. The intent is to ensure that the federal departments and agencies identify and address any disproportionately high and adverse human health or environmental effects from their policies, programs and activities on minority and low income populations of EJ concern.

This project will require the acquisition of 2.0 acres of new permanent right-of-way and 6 relocations. Per the INDOT Environmental Justice in NEPA Documentation Process (4-3-2012), an EJ analysis is required for Environmental Assessments.

The following information was determined by a review of U.S. Census Tract – 5 year (2010-2014) American Community Survey (ACS) Data concerning race, income, and poverty levels within the project limits. The Census Data was obtained from http://factfinder2.census.gov/faces/nav/jsf/pages/index.xhtml. The reference community is typically a county, city, or town that contains the project and is called the community of comparison (COC). The community that overlaps the project limits is called the affected community (AC). Affected communities that are more than 50 percent minority or low-income are automatically EJ populations. EJ populations are present if the low-income population or minority population of the AC is 125 percent of the COC (see Appendix H).

At the project location, 2014 U.S Census Tract Data was analyzed for the City of Madison. The proposed project spans two affected communities (i.e. census tracts). The EJ Analysis for the affected communities is provided in the paragraphs below:

Census Tract 9665

The percentage of low-income population in the AC along the project is 14.7% which is less than the 125% threshold of the COC (19.3%). The minority population in the AC is 4.8% which is less than the 125% threshold of the COC (11.7%). This comparison indicates that the AC contains no elevated low-income and minority populations of EJ concern.

The following table restates the comparisons described in the above paragraph:

	Madison (COC)	125% of COC	Census Tract 9665 (AC)	EJ Population of Concern
Low-Income Population	15.5%	19.3%	14.7%	No
Minority Population	9.4%	11.7%	4.8%	No

Census Tract 9666

The percentage of low-income population in the AC along the project is 6.2% which is less than the 125% threshold of the COC (19.3%). The minority population in the AC is 7.5% which is less than the 125% threshold of the COC (11.7%). This comparison indicates that the AC contains no elevated low-income and minority populations of EJ concern.

The table below restates the comparisons described in the above paragraph.

	Madison (COC)	125% of COC	Census Tract 9666 (AC)	EJ Population of Concern
Low-Income Population	15.5%	19.3%	6.2%	No
Minority Population	9.4%	11.7%	7.5%	No

The proposed project will not result in disproportionate negative impacts to EJ populations. INDOT is committed to ensure nondiscrimination in its federally funded activities and to comply with the intent of the Executive Order and the Memorandum on EJ, through the continuous public involvement process. Three public information meetings have been offered for this project.
A public hearing will be provided for this project. The public hearing will provide a chance for all interested and affected parties, including any affected minority and low income populations which may be impacted to identify themselves and express their opinions regarding the human health and environmental impacts due to the proposed project.

Relocation of People, Businesses or Farms

	Yes	No
Will the proposed action result in the relocation of people, businesses or farms?	X	
Is a Business Information Survey (BIS) required?		X
Is a Conceptual Stage Relocation Study (CSRS) required?		X
Has utility relocation coordination been initiated for this project?	X	

Number of relocations: Residences: 2 Businesses: 4 Farms: 0 Other: 0

If a BIS or CSRS is required, discuss the results in the remarks box.

Remarks: The roadway alignment has been set to minimize impacts to residential and commercial properties. The acquisition and relocation of 2 residential and 4 business properties were determined to be unavoidable. The proposed relocations are shown on the project aerial map found at Appendix A, A-3. The properties to be relocated are listed below:

Relocations
112 Sering Street, Madison, Indiana
114 Sering Street, Madison, Indiana
901 Second Street, Madison, Indiana
902 Second Street, Madison, Indiana
202 Harrison Street, Madison, Indiana
210 Harrison Street, Madison, Indiana

The acquisitions and relocations will be conducted in accordance with 49 CFR 24 of the Uniform Relocation Assistance and Real Property Acquisition Policies Act of 1970 as amended. Relocation resources are available to all residential and business relocatees without discrimination. No person displaced by this project will be required to move from a displaced dwelling unless comparable replacement housing is available to that person.

An Early Utility Coordination Meeting was held on December 3, 2015 to discuss existing utility facilities and the impact of project conflicts on project delivery. A second utility coordination meeting was conducted on April 8, 2016 to review the project alternatives and determine the overall impact each alternative could have on the existing utilities. All of the utility companies have confirmed their facilities on the preliminary design plans. The anticipated impacts to the utilities, at this time, involve the lowering of an existing watermain under Second Street at the intersection of US 421, and the relocation of roadway lighting along US 421 between the Milton-Madison Bridge and Second Street. Finally, various castings, valves, and service line adjustments will be required throughout the project limits.

SECTION H – HAZARDOUS MATERIALS & REGULATED SUBSTANCES

Hazardous Materials & Regulated Substances (Mark all that apply)	**Documentation**
Red Flag Investigation	X
Phase I Environmental Site Assessment (Phase I ESA)	X
Phase II Environmental Site Assessment (Phase II ESA)	X
Design/Specifications for Remediation required?	

	No	**Yes/ Date**
ES Review of Investigations		7/20/16 (RFI) / 1/9/17 (Phase I ESA) / 12/11/17 (Phase II)

Include a summary of findings for each investigation.

Remarks: A red flag investigation (RFI) was completed on July 19, 2016 by United Consulting. See Appendix D, D-1 to D-15. INDOT Hazardous Material Unit concurred with the results of the RFI on July 20, 2016.

A search of the hazardous material sites revealed several areas of concern within a 0.5 mile radius of the project. As a result, a Phase I Environmental Site Assessment (Phase I ESA) was recommended. A Phase I ESA was conducted on November 5, 2016 and revised on December 28, 2016 (Appendix D, D-16 to D-59) by Weaver Consultants Group. The sites listed below represent the recognized environmental concern

locations identified in the Phase I ESA. The location of each site is shown on Appendix D, D-59.

1) Former Filling Station (901 E. Second Street),
2) Former Filling Station (814 E. Second Street),
3) Former Filling Station (902 E. Second Street),
4) Former Filling Station (822 E. First Street),
5) Former Brewery/Machine Shop (928 Park),
6) Historic Tannery (906, 910, and 918 E. Second Street and 903 E. First Street),
7) Former Filling Station/Dry Cleaner (901 E. First Street),
8) Former Filling Station (114 Sering Street), and
9) Former Filling Station (150 Harrison Street).

Metric Environmental, LLC (Metric) performed a Phase II Limited Subsurface Environmental Site Assessment dated December 1, 2017 (Appendix D, D-61 to D-76). Four (4) soil borings from Second Street north to Main Street were proposed to be advanced to a total depth of up to 20 feet below ground surface (bgs) consistent with the excavation of existing ground surface to proposed grade and utility work presented in the proposed scope of construction activities. The remaining seventeen (17) soil borings south of Fillmore Street to Second Street were advanced to a depth of 10 feet bgs consistent with the excavation of existing ground surface to proposed grade and utility work presented in the proposed scope of construction activities. One additional site (213 East Harrison Street) was added to the investigation during the scope coordination with INDOT for the Phase II Limited Subsurface Environmental Site Assessment.

Metric advanced a total of 21 soil borings along the project corridor. Soil samples were collected along the corridor and analyzed for chemicals of concern as indicated in the table below:

Site Number	Site	Address	Excavation Depth	Maximum Sample Depth	Number of Borings	Environmental Testing
1	Former Filling Station	901 E. Second Street	20 feet	20 feet	3	polycyclic aromatic hydrocarbons (PAHs) via, lead, and volatile organic compounds (VOCs)
2	Former Filling Station	814 E. Second Street	20 feet	10 feet (boring refusal)	2	PAHs, VOCs, and Lead
3	Former Filling Station	902 E. Second Street	5 feet	10 feet	1	PAHs, VOCs, and Lead
4	Former Filling Station	822 E. First Street	5 feet	10 feet	2	PAHs, VOCs, and Lead
5	Former Brewery/Machine Shop	928 Park	5 feet	10 feet	1	Metals, PAHs, VOCs, and Lead
6	Historic Tannery	906, 910, and 918 E. Second Street and 903 E. First Street	5 feet	10 feet	3	PAHs, VOCs, and Lead
7	Former Filling Station/Dry Cleaner	901 E. First Street	5 feet	10 feet	2	PAHs, VOCs, and Lead
8	Former Filling Station	114 Sering Street	20 feet	16 feet (boring refusal)	2	PAHs, VOCs, and Lead

9	Former Filling Station	150 Harrison Street	5 feet	8 feet	3	PAHs, VOCs, and Lead
10	Former Filling Station	213 E. Harrison Street	10 feet	10 feet	2	PAHs, VOCs, and Lead

Results of all soil samples collected were compared to the 2017 Indiana Department of Environmental Management Remediation Closure Guide and Screening Levels (IDEM RCG and SLs) for regulatory guidance. Specifically soil samples were compared to the IDEM RCG soil migration to groundwater (MTG) and residential direct contact SLs.

While several chemicals of concern were detected in soils above the applicable IDEM RCG MTG, none were above the applicable residential direct contact SLs or exceeded the applicable Toxicity Characteristic Leaching Procedure (TCLP) screening levels. Properties with soils that exceeded the applicable IDEM RCG soil MTG SLs will be required to be properly disposed of in a municipal landfill. Further, workers who may come into contact with these impacted soils will be required to wear appropriate personal protective equipment (PPE), including disposable nitrile gloves to prevent any personal contact with impacted soils encountered at the site.

The properties and depths to which this applies include the following:

1) 902 East Second Street, from 0-2 feet,
2) 822 East First Street, from 2-4 feet, and
3) 150 Harrison Street 0-2 feet.

The Phase II concluded that no further investigation of the soils in the project corridor was warranted.

If a spill occurs or contaminated soils or water are encountered during construction, appropriate PPE should be used. Contaminated materials will need to be properly handled by trained personnel and disposed in accordance with current regulations. IDEM should be notified through the spill line at (888) 233-7745 within 24 hours of discovery of contamination from a Leaking Underground Storage Tank and 2 hours from a spill.

SECTION I – PERMITS CHECKLIST

Permits (mark all that apply)	**Likely Required**
Army Corps of Engineers (404/Section10 Permit)	
Individual Permit (IP)	
Nationwide Permit (NWP)	
Regional General Permit (RGP)	
Pre-Construction Notification (PCN)	
Other	
Wetland Mitigation required	
Stream Mitigation required	
IDEM	
Section 401 WQC	
Isolated Wetlands determination	
Rule 5	X
Other	
Wetland Mitigation required	
Stream Mitigation required	

IDNR

Construction in a Floodway	
Navigable Waterway Permit	
Lake Preservation Permit	
Other	
Mitigation Required	
US Coast Guard Section 9 Bridge Permit	
Others (Please discuss in the remarks box below)	

Remarks: It will be the responsibility of the designer to submit plans to INDOT Environmental Services to process permits.

I.D.E.M. Rule 5 Permit: The project will disturb greater than one acre. Rule 5 administered through the Indiana Department of Environmental Management will apply to this project. Completion of this permit will be coordinated with IDEM.

SECTION J- ENVIRONMENTAL COMMITMENTS

The following information should be provided below: List all commitments, name of agency/organization requesting the commitment(s), and indicating which are firm and which are for further consideration. The commitments should be numbered.

Remarks:

Firm:

1. The use of cutback asphalt, or asphalt emulsion containing more than (7%) oil distillate, is prohibited during the months of April through October. (IDEM)

2. Reasonable precautions must be taken to minimize fugitive dust emissions from construction and demolition activities. Dirt tracked onto paved road from unpaved areas should be minimized. (IDEM)

3. Public or private roadways shall be kept cleared of accumulated sediment that is a result of run-off or tracking. (IDEM)

4. Wastes and unused building materials shall be managed and disposed of in accordance with all applicable statues and regulations. (IDEM)

5. All facilities slated for renovation or demolition must be inspected by an Indiana-licensed asbestos inspector prior to renovation or demolition activities. If regulated asbestos-containing material (RACM) that may become airborne is found, demolition, renovation, or asbestos removal activities must be performed in accordance with notification and emission control requirements. (IDEM)

6. If permanent or temporary right of way amounts change, INDOT Environmental Services will be contacted immediately. (INDOT)

7. Any work in a wetland area within existing right-of-way or in a borrow/waste area is prohibited unless specifically allowed in the US Army Corps of Engineers or IDEM permit. (INDOT)

8. School corporations and emergency services will be notified at least two weeks prior to any construction that would block or limit access. (INDOT)

9. If the project scope of work changes, including depths of excavation, then INDOT Hazardous Materials Unit will be contacted to determine if additional Phase II environmental sampling activities will be necessary. (INDOT)

10. Further coordination in regards to the wellhead protection area with the City of Madison, Utilities Manager will occur once construction limits have been finalized. (INDOT)

11. Access will be provided to adjacent businesses and residences during construction. (INDOT)

12. If a spill occurs or contaminated soils or water are encountered during construction, appropriate Personal Protection Equipment (PPE) should be used. Contaminated materials will need to be properly handled by trained personnel and disposed in accordance with current regulations. IDEM should be notified through the spill line at (888) 233-7745 within 24 hours of discovery of contamination from a Leaking Underground Storage Tank and 2 hours from a spill. (INDOT)

13. Representatives of the following jurisdictions and organizations will be invited by FHWA to participate on the Advisory Committee, based upon their established geographic connection to or specific interest in the Madison NRHP Historic District and/or the Madison NHL Historic District, or expertise pertaining to the historic preservation area: selected representatives of the City of Madison and all consulting parties identified in Attachment B. Representatives from INDOT or the Indiana SHPO may participate in Advisory Committee meetings at their discretion. (INDOT)

14. As soon as practical, FHWA will convene the Advisory Committee for an initial organizational meeting to establish processes and procedures for the operation of the Advisory Committee and to select the number of and the dates of future meetings to ensure the timely completion of the project. The Advisory Committee will review plans, comment, and make specific recommendations regarding the Project design, scopes of work, and details for consideration by FHWA. Advisory Committee meetings will be held in Madison, Indiana; Advisory Committee members will have the opportunity to participate via teleconference upon request. The Advisory Committee will be chaired by a representative from INDOT or by a consultant. The chair will be responsible for convening meetings of the Advisory Committee, preparing and maintaining a summary of meetings, and preparing and submitting Advisory Committee recommendations to FHWA for consideration and action, in consultation with the Indiana SHPO. (INDOT)

15. The Advisory Committee will function in an advisory capacity to assist INDOT in developing Project design details to implement the measures stipulated in this MOA regarding the Madison NRHP Historic District and the Madison NHL Historic District. (INDOT)

16. INDOT and/or its consultants will provide project updates every other month to Advisory Committee members that will include new or altered project design details. This project update will be distributed to members via electronic mail. Additionally, INDOT and/or its consultants will provide any materials needed for review by the Advisory Committee at least fifteen (15) days before scheduled meetings. In addition to comments voiced in

meetings, Advisory Committee members may provide written comments to the chair within fifteen (15) days following the scheduled meeting. (INDOT)

17. Specific design topics reviewed by the Advisory Committee shall include but are not limited to: pedestrian and non-motorized vehicle access; appropriate parking; the use of streetscape elements such as historically scaled lighting, contextually appropriate street fixtures, native landscape plantings, and a context sensitive gateway feature and architecturally appropriate retaining walls. (INDOT)

18. INDOT shall include provisions in their contract that limit construction activities and construction noise during special events. INDOT, with input from the City of Madison, shall identify the special events for which these provisions. (INDOT)

19. Based on the comments provided by the Advisory Committee members, the chair will develop recommendations and submit them to FHWA and INDOT for consideration and action, in consultation with the Indiana SHPO. (INDOT)

20. FHWA shall have the authority for final approval of actions regarding the implementation of measures to avoid, minimize, or mitigate effects to the Madison NRHP Historic District and the Madison NHL Historic District. (INDOT)

21. INDOT shall salvage, where feasible, and the City of Madison shall store limestone removed from culverts, walls, and walks with the intent of incorporating such stone within the construction of the Project. If the limestone cannot feasibly be incorporated into this project, it shall be made available to residents of the Madison NRHP Historic District and the Madison NHL Historic District for use within those districts. (INDOT)

22. INDOT shall incorporate architecturally appropriate retaining walls in terms of height, scale, and aesthetic treatment into the design of the project. INDOT shall, where feasible, incorporate limestone salvaged from culverts, walls, and walks into the design of the retaining walls. (INDOT)

23. INDOT shall incorporate a context-sensitive gateway feature into the final construction of the project. (INDOT)

24. INDOT shall, where feasible, salvage architectural details from the home at 112 E. Sering Street and offer them for use in other residences in the NHL or NRHP. INDOT or its consultant will develop a Dispensation Plan; the Advisory Committee will have thirty (30) days to review and comment. INDOT or its consultant will oversee the dispensation of the salvaged architectural details. A report will be provided to FHWA and the Advisory Committee after all architectural details have been removed and dispensed. (INDOT)

25. The City of Madison will employ a Historic Preservation Officer for the purpose of seeking new opportunities to apply for grants and other assistance for use in improvements for the Madison NRHP Historic District and Madison NHL Historic District. The Historic Preservation Officer shall meet the qualifications specified in *The Secretary of the Interior's Historic Preservation Professional Qualification Standards,*

Federal Register, June 20, 1997. The City may elect to receive reimbursement of $40,000.00 annually for a period of two (2) years or for $20,000.00 annually for a period of four (4) years. This reimbursement shall not exceed $80,000.00. This stipulation will be implemented through an INDOT Local Public Agency (LPA) agreement with the City of Madison. (INDOT)

26. INDOT shall reimburse the Historic Preservation Officer and the Madison Historic District Board of Review for activities and educational training for program members and employees. The reimbursement shall not exceed five thousand dollars ($5,000.00) per year and shall be applicable for two years. (INDOT)

27. INDOT shall monitor historic properties for potential construction and traffic vibration damage. Attachment C lists the properties where monitoring is scheduled to occur. A Vibration Monitoring Plan shall be developed and presented to the Historic Preservation Advisory Committee for a thirty (30) day review and comment period. The Plan shall include provisions for pre- and post-construction surveys, installation of vibration monitoring devices and visual inspection during construction. As appropriate, INDOT will observe the vibration monitors and make the determination as to whether vibration from construction and traffic could cause damage to historic properties. INDOT or its consultant shall provide regularly-scheduled reports to the Advisory Committee summarizing the results of the data generated by the monitoring devices. (INDOT)

28. If damage occurs as a result of Project activities, INDOT or their contractors shall be responsible for repair of any resulting vibration damage the historic properties. Any repairs will be coordinated in advance with the SHPO to ensure they are carried out in accordance with *The Secretary of the Interior's Standards for Rehabilitation and Guidelines for Rehabilitating Historic Buildings* ("Secretary's Standards"). Where access to privately owned property is necessary for monitoring or damage repair, consent shall be obtained prior to entry. If access is denied, a good faith effort shall be made by INDOT to identify an alternative historic property nearby for monitoring that is likely to experience similar impacts. (INDOT)

29. Construction activities shall occur in accordance with local noise regulations, policies, and guidance to minimize adverse noise effects. INDOT shall require the contractor to obtain all necessary permitting to allow oversize vehicles or heavy loads to access the Project site. INDOT's standard specifications state that the contractor must confirm allowable routing with the local government if they are going to use local roads. (INDOT)

30. INDOT shall ensure that the contractor utilize a Traffic and Parking Management Plan for maintenance of traffic during construction that is sensitive to the historic districts and makes practical and reasonable efforts to minimize impacts to historic districts. (INDOT)

31. INDOT shall include provisions in their contract that limit construction activities and construction noise during special events. INDOT, with input from the City of Madison, shall identify the special events for which these provisions apply. (INDOT)

32. The studies completed pursuant to Stipulation III.E. of the MOA shall demonstrate a level of effort consistent with the 36 C.F.R. part 800 regulations in effect on the date upon which

the last of the required signatories has signed this MOA and provide FHWA with the information to determine, in consultation with the Indiana SHPO, which archaeological properties are eligible for inclusion in the NRHP. FHWA shall acknowledge and seek the special expertise of any federally recognized Indian Tribes which have previously entered into consultation in assessing the eligibility of historic properties that may possess religious and cultural significance to them. (INDOT)

33. In implementing Stipulation III.A through III.G of the MOA., INDOT may consult with the consulting parties listed in Attachment B and others identified in accordance with the 36 C.F.R. part 800 regulations in effect on the date upon which this MOA is fully executed. (INDOT)

34. In accordance with Section 304 of the NHPA and the 36 C.F.R. part 800 regulations in effect on the date upon which this MOA is fully executed INDOT and its consultants, shall ensure that sensitive information regarding the nature and location of human remains and grave goods, and the location, character, and ownership of archaeological sites is kept confidential from the public. (INDOT)

35. In ensuring that any human remains and grave goods identified are treated in a sensitive, respectful, and careful manner, INDOT shall be guided by the Council's "Policy Statement Regarding Treatment of Human Remains and Grave Goods" (February 23, 2007) and the Native American Graves Protections and Repatriation Act ("NAGPRA") regulations set forth in 43 C.F.R. part 10, and other guidelines as appropriate. (INDOT)

36. If any human remains are encountered during the project, work shall cease in the immediate area and the human remains left undisturbed. INDOT shall contact the county coroner and law enforcement officials immediately, and the discovery must be reported to the Indiana SHPO within two (2) business days. The discovery must be treated in accordance with Indiana Code 14-21-1 and 312 Indiana Administrative Code 22. Work at this site shall not resume until a plan for the treatment of the human remains is developed and approved in consultation with the Indiana SHPO, the INDOT Cultural Resources Office, and any appropriate consulting parties. (INDOT)

37. Modification or modifications ("modifications") to the Project which fall outside of the archaeological APE, depicted in Attachment A, dated October 2016, shall be subject to archaeological identification and evaluation and assessment per Stipulations III.B. and III.C of the MOA. If FHWA determines that the modifications have the potential to cause adverse effects on archaeological resources, then FHWA shall treat the archaeological resource in accordance with Stipulation III.G. (INDOT)

38. Before commencing ground-disturbing activities in the Project archaeological APE for the Preferred Alternative, INDOT shall complete the identification and evaluation of archaeological properties contributing to the Madison Historic District and National Historic Landmark in accordance with applicable Federal and State standards and guidelines listed in Stipulations I and III.A of the MOA. (INDOT)

39. INDOT shall prepare and distribute a final Identification and Evaluation report in accordance with Stipulations I and III.A of the MOA. (INDOT)

40. Upon completion of the evaluation, FHWA shall follow the procedures set forth in the 36 C.F.R. part 800 regulations in effect on the date upon which this MOA is fully executed which shall include updated documentation described in those regulations, if it is determined that no historic properties shall be affected. (INDOT)

41. In consultation with the Indiana SHPO, federally recognized Indian Tribes that may ascribe traditional cultural and religious significance to affected properties, and other parties whom FHWA deems appropriate, FHWA shall determine if the Project shall adversely affect archeological properties determined eligible for inclusion in the NRHP pursuant to the 36 C.F.R. part 800 regulations in effect on the date upon which this MOA is fully executed. (INDOT)

42. If, in consultation with the Indiana SHPO, federally recognized Indian Tribes that may ascribe traditional cultural and religious significance to affected properties, and other parties whom FHWA deems appropriate, FHWA determines the Project may adversely affect NRHP-eligible archeological properties, then FHWA shall make reasonable efforts to avoid or minimize the adverse effect. If, after this consultation, FHWA determines it is not possible to avoid or minimize adverse effects, then FHWA shall treat the archaeological resource in accordance with Stipulation III.G. of the MOA. (INDOT)

43. Any dispute regarding the determination of effects on NRHP-eligible archaeological properties shall be resolved in accordance with applicable Federal and State standards and guidelines listed in Stipulation IV.A of the MOA. (INDOT)

44. Consultation with the Indiana SHPO has determined that the following properties are within the Archaeology APE and must be avoided or subjected to archival research and photo documentation,: Sites 12JE0549, 12JE0552, 12JE0553, 12JE0555, and 12JE0561. (INDOT)

45. Consultation with the Indiana SHPO has determined that Sites 12JE0551 and 12JE0553 within the Archaeology APE must be avoided or subjected to additional archaeological investigations. If avoidance is not feasible, INDOT will submit a plan for further archaeological investigations to the SHPO for review and comment and will follow the provisions in Stipulation III.E of the MOA. (INDOT)

46. Consultation with the Indiana SHPO has determined that Sites 12JE0551 and 12JE0553 within the Archaeology APE must be avoided or subjected to additional archaeological investigations. If avoidance is not feasible, INDOT will submit a plan for further archaeological investigations to the SHPO for review and comment and will follow the provisions in Stipulation III.E of the MOA. (INDOT)

47. INDOT shall investigate a design that avoids Sites 12JE0549, 12JE0551, 12JE0552, 12JE0553, 12JE0555, and 12JE0561. (INDOT)

48. Where avoidance is not possible, all archaeological investigations shall be conducted according to applicable Federal and State standards and guidelines listed in Stipulations I and III.A. (INDOT)

49. To maximize the opportunity to avoid adverse effects, the required archaeological investigations shall be conducted as soon as practicable upon securing the appropriate rights to access property. (INDOT)

50. INDOT, in consultation with the Indiana SHPO, and other parties deemed appropriate by INDOT, shall take reasonable measures to avoid disinterment and disturbance to human remains and grave goods of religious and cultural significance to Native Americans, including investigations associated with modifications of the Project. (INDOT)

51. If Sites 12JE0552, 12JE0553, 12JE0555, and 12JE0561 cannot be avoided by construction activities, INDOT shall develop, or provide funding for a consultant to develop, Historic American Engineering Record (HAER) Level II documentation of Sites 12JE0552, 12JE0553, 12JE0555, and 12JE0561 for submittal to the Library of Congress. Level II requires a sketch plan, large format photographs and a narrative per HAER standards. The NPS shall review the work of the HAER documentation submitted by INDOT to ensure the work meets the required standard and format. INDOT and its consultants shall prepare the documentation for submission through the HAER Program to the Library of Congress in Washington, D.C. (INDOT)

52. If Site 12JE0549 cannot be avoided by construction activities, INDOT shall develop or provide funding for a consultant to develop Historic American Landscapes Survey (HALS) Level II documentation of Site 12JE0549 for submittal to the Library of Congress. Level II requires a sketch plan, large format photographs and a narrative per HALS standards. The NPS shall review the work of the HALS documentation submitted by INDOT to ensure the work meets the required standard and format. INDOT and its consultants shall prepare the documentation for submission through the HALS Program to the Library of Congress in Washington, D.C. (INDOT)

53. After the construction limits of the project are established, coordinate with the City of Madison to ensure the Wellhead Protection Area does not overlap the construction limits. (City of Madison)

54. The area must be surveyed for nesting migratory birds and monitored to make sure that any active nests are not disturbed and work be completed after any active nest has failed or successfully fledged chicks; or work occurs in the fall and winter between early September to early March to avoid disturbing nesting bird species that breed in the spring and summer. (IDNR)

55. Do not cut any trees suitable for Indiana bat or Northern Long-eared bat roosting (greater than 3 inches dbh, living or dead, with loose hanging bark, or with cracks, crevices or cavities) from April 1 through September 30. (IDNR)

56. If the goal of the project is to exclude bats, coordinate with the local Service Field Office and follow Acceptable Management Practices for Bat Control Activities in Structures guidance document. (USFWS)

57. Perform any structure maintenance and/or repair work during the winter hibernation period unless a hibernating colony of bats is present. (USFWS)

58. If maintenance and/or repair work will be performed outside of the winter hibernation period, determine if work will occur in an area with roosting bats. If there is observed bat activity (or signs of frequent bat activity), Transportation Agencies/State DOTs will conduct maintenance activity or similar structure alteration when bats are not present (e.g., foraging) or in a manner that will not disturb them. (USFWS)

59. If roosting bats or signs of roosting bats are observed Transportation Agencies/State DOTs will avoid removing the structure. NOTE: If there are concerns about human health/safety/property, coordinate with a nuisance wildlife control officer and the local Service Field Office. (USFWS)

60. Modify all phases/aspects of project (e.g. temporary work areas, alignments) to the extent practicable to avoid tree removal in excess of what is required to implement project safely. (USFWS)

61. Apply time of year restrictions for tree removal when bats are not likely to be present. (USFWS)

62. Ensure tree removal is limited to that specified in project plans. Install bright orange flagging/fencing prior to any tree clearing to ensure contractors stay within clearing limits. Ensure that contractors understand the clearing limits and how they are marked in the field. (USFWS)

63. Avoid cutting down documented Indiana bat and NLEB roosts that are still suitable for roosting or documented foraging habitat *at any time of year.* Avoid cutting down trees within 0.25 miles of documented roosts *at any time of year*. Ensure that suitable roosts remain on the landscape rather than focusing on general forest loss. (USFWS)

64. All trees and shrub removal will occur in the fall and winter months between October 1 and April 1. (IDNR)

For Further Consideration:

65. Appropriately designed measures for controlling erosion and sediment must be implemented to prevent sediment form entering the stream or leaving the construction site; maintain these measure until construction is complete and all disturbed areas are stabilized. (IDNR)

66. Seed and protect all disturbed slopes that are 3:1 or steeper with heavy-duty biodegradable erosion control blankets (follow manufacturer's recommendations for selection and installation); seed and apply mulch on all other disturbed areas. (IDNR)

67. Do not excavate the in the low flow area except for the placement of piers, foundations, and riprap, or removal of the old structure. (IDNR)

68. Minimize and contain within the project limits inchannel disturbance and the clearing of trees and brush. (IDNR)

69. Do not work in the waterway from April 1 through June 30 without the prior written approval of the Division of Fish and Wildlife. (IDNR)

70. Do not construct any temporary runarounds, causeways, cofferdams, pump arounds, or stream diversion systems. (IDNR)

71. Use minimum average 6 inch graded riprap stone extended below the normal water level to provide habitat for aquatic organisms in the voids. (IDNR)

72. Revegetate all bare and disturbed areas with a mixture of grasses (excluding all varieties of tall fescue), legumes, and native shrub and hardwood tree species as soon as possible upon completion of the project. (IDNR)

73. Impacts to non-wetland forest under one (1) acre in an urban setting should be mitigated by planting five trees, at least 2 inches in diameter-at-breast height (dbh), for each tree which is removed that is 10” dbh or greater (5:1 mitigation based on the number of large trees).

74. Creek crossings should be constructed using a bridge or a three-sided culvert structure instead of box culverts or pipes. Duet to natural down cutting of unconsolidated stream bed substrates over time, a three-sided culvert or a bridge is recommended over a sumped box culvert, if possible. Do not place riprap in or across the stream except at the edges of the structure to protect the footings and at the toe of the stream bank.

75. Do not clear trees or understory vegetation outside the construction zone boundaries. (USFWS)

76. Restrict below low-water work in streams to placement of culverts, piers, pilings and/or footings, shaping of the spill slopes around the bridge abutments, and placement of riprap. (USFWS)

77. Culverts should span the active stream channel, should be either embedded or a 3-sided or open-arch culvert, and be installed where practicable on an essentially flat slope. When an open-bottomed culvert or arch is used in a stream, which has a good natural bottom substrate, such as gravel, cobbles and boulders, the existing substrate should be left undisturbed beneath the culvert to provide natural habitat for the aquatic community. (USFWS)

78. Restrict channel work and vegetation clearing to the minimum necessary for installation of the stream crossing structure. (USFWS)

79. Minimize the extent of hard armor (riprap) in bank stabilization by using bioengineering techniques whenever possible. If rip rap is utilized for bank stabilization, extend it below low-water elevation to provide aquatic habitat. (USFWS)

80. Implement temporary erosion and sediment control methods within areas of disturbed soil. All disturbed soil areas upon project completion will be vegetated following INDOT’s standard specifications. (USFWS)

81. Avoid all work within the inundated part of the stream channel (in perennial streams and larger intermittent streams) during the fish spawning season (April 1 through June 30), except for work within sealed structures such as caissons or cofferdams that were installed prior to the spawning season. No equipment shall be operated below Ordinary High Water Mark during this time unless the machinery is within the caissons or on the cofferdams. (USFWS)

82. Evaluate wildlife crossings under bridge/culverts projects in appropriate situations. Suitable crossings include flat areas below bridge abutments with suitable ground cover, high water shelves in culverts, amphibian tunnels and diversion fencing. (USFWS)

SECTION K- EARLY COORDINATION

Please list the date coordination was sent and all agencies that were contacted as a part of the development of this Environmental Study. Also, include the date of their response or indicate that no response was received. INDOT and FHWA are automatically considered early coordination participants and should only be listed if a response is received.

Remarks:

The early coordination for this project was initiated on May 2, 2017 with the mailing of an early coordination letter containing information about the proposed project. The purpose of this correspondence was to inform all concerned parties of the intentions of the FHWA, INDOT and City of Madison.

A sample copy of the early coordination letter is included at Appendix B, B-1 to B-6. The table below shows the recipients of the early coordination letter and whether or not a response was received:

Agency	Response Received	Response Location
Natural Resources Conservation Service	May 4, 2017	B-9– B-10
Indiana Department of Environmental Management	June 16, 2017	B-13 – B-20
US Fish and Wildlife Service	Did not respond	----------
US Army Corps of Engineers	Did not respond	----------
Indiana Department of Natural Resources – Davison of Fish and Wildlife	June 1, 2017	B-7 – B-8
INDOT Department of Aviation	May 10, 2017	B-21
Indiana Geological Survey	Did not respond	----------
National Park Service	Did not respond	----------
US HUD	Did not respond	----------
Indiana Department of Environmental Management – Groundwater Section	May 4, 2017	B-11
MS4 Coordinator	May 12, 2017	B-12
INDOT Public Involvement	Did not respond	----------

FHWA	Did not respond	----------
City of Madison	Did not respond	----------

Index to Appendices

Appendix A: Graphics

A-1	State Location Map
A-2	Existing Conditions Map
A-3	Relocations Map
A-4	Preferred Alternative Map
A-5	United States Geological Survey Quadrangle Map
A-6	National Wetlands Inventory Map
A-7	Flood Insurance Rate Map
A-8 – A-9	Photo Orientation Sheets
A-10 – A-34	Ground Level Photographs
A-35 – A-58	Plan and Profile Sheets

Appendix B: Early Coordination

B-1 – B-6	Sample Early Coordination Letter
B-7 – B-8	IDNR – Division of Fish and Wildlife - Early Coordination Responses
B-9 – B-10	NRCS Early Coordination Response
B-11	IDEM Wellhead Protection Determination
B-12	City of Madison Wellhead Protection Email
B-13 – B-20	IDEM Early Coordination Response Letter
B-21	INDOT Aviation Early Coordination Response

Appendix C: Section 106 Documentation

C-1– C-234	Section 106 Documentation
C-235	Public Notice
C-236 – C-238	SHPO Concurrence Letter
C-239 – C-241	Relocation Estimate
C-242 – C-244	July 11, 2017 Conference Call Summary
C-245	ACHP Email

Appendix D: Red Flag and Hazardous Materials

D-1 – D-15	Red Flag Investigation
D-16 – D-59	Phase I ESA
D-60	Phase I ESA INDOT Approval
D-61 – D-76	Phase II ESA
D-77	Phase II ESA INDOT Approval

Appendix E: Noise Analysis

E-1	INDOT Technical Approval
E-2 – E-82	Noise Analysis

Appendix F: Ecological and Water Resources

F-1 – F-27	Waters of the U.S. Report

Appendix G: Public Involvement

G-1	December 3, 2015 Open House Flier
G-2 – G-7	December 3, 2015 Sign in Sheets
G-8	February 18, 2016 Open House Flier
G-9 – G-19	February 18, 2016 Sign in Sheets
G-20	August 18, 2016 Open House Flier
G-21 – G-25	August 18, 2016 Sign in Sheets

Appendix H: Environmental Justice

H-1 – H-7	Environmental Justice Analysis

Appendix I: Section 4(f) Documentation

I-1 – I-89	Individual Section 4(f) Document
I-90 – I-91	NPS Concurrence Letter
I-92	FHWA Legal Sufficiency Review

Appendix J: Additional Information

J-1	INDOT STIP
J-2	Section 6(f) Database Search
J-3 – J-8	Range-wide Programmatic Consultation for Indiana Bat and Northern Long-eared Bat Scoping Worksheet
J-9	Land-Use Map
J-10 – J-15	Project Submittal Form for FHWA, FRA, and Transportation Agencies
J-16 – J-62	Alternative Analysis Report

Appendix A

Graphics

Project 421
Des. No.: 1400918
Madison, Indiana

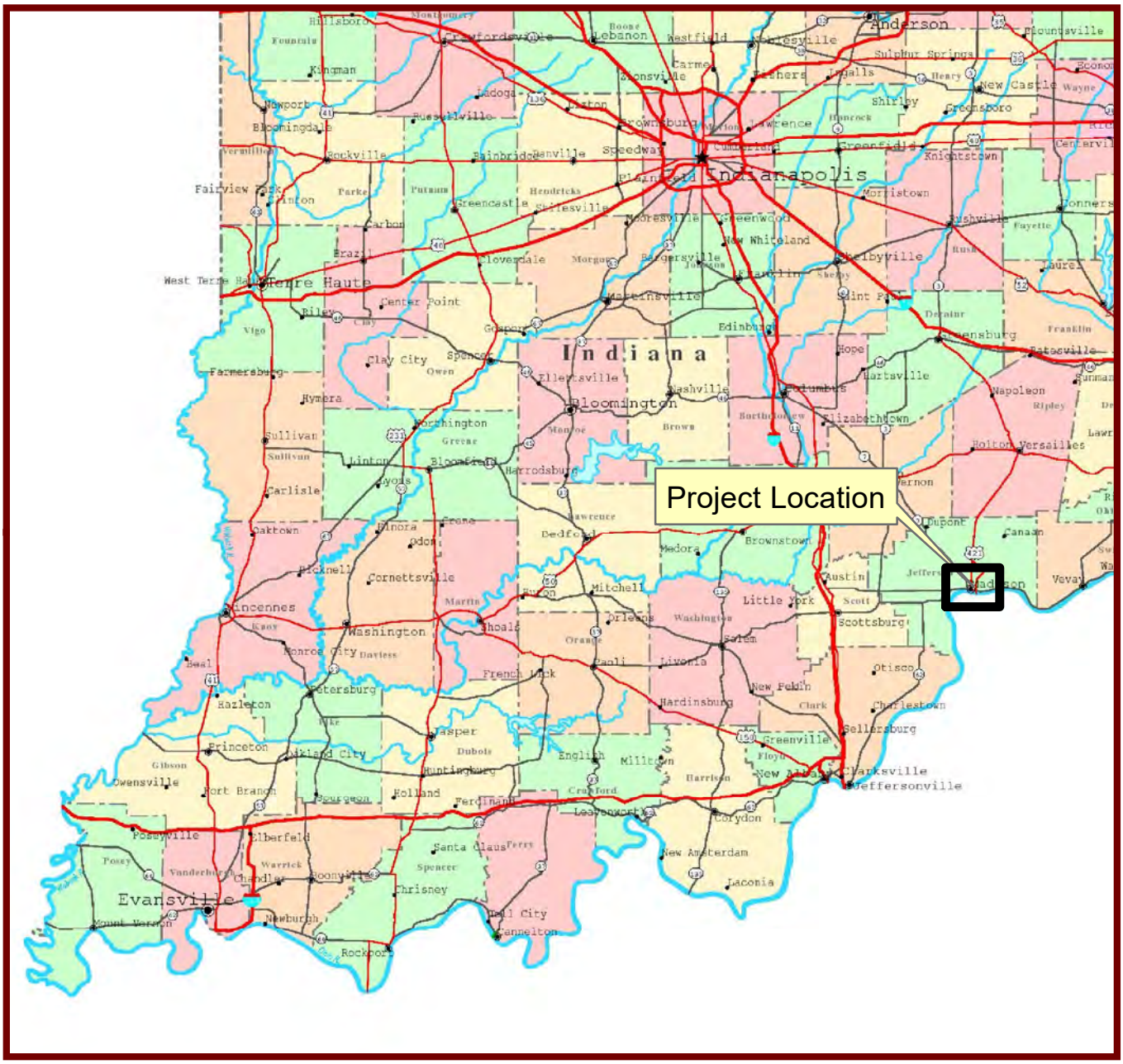

Indiana Highway Map

Indiana Department of Transportation
Environmental Services
Ecology & Waterway Permitting
100 North Senate Avenue, Room N642
Indianapolis, Indiana 46204

N
W E
S

PROJECT 421
MADISON, INDIANA
EXISTING CONDITIONS

INDOT DES. NO. : 1400918

SCALE = 1" = 100'

LEGEND

- Existing US 421
- Existing SR-56
- Existing US 421/SR-56
- Existing Right of Way Line

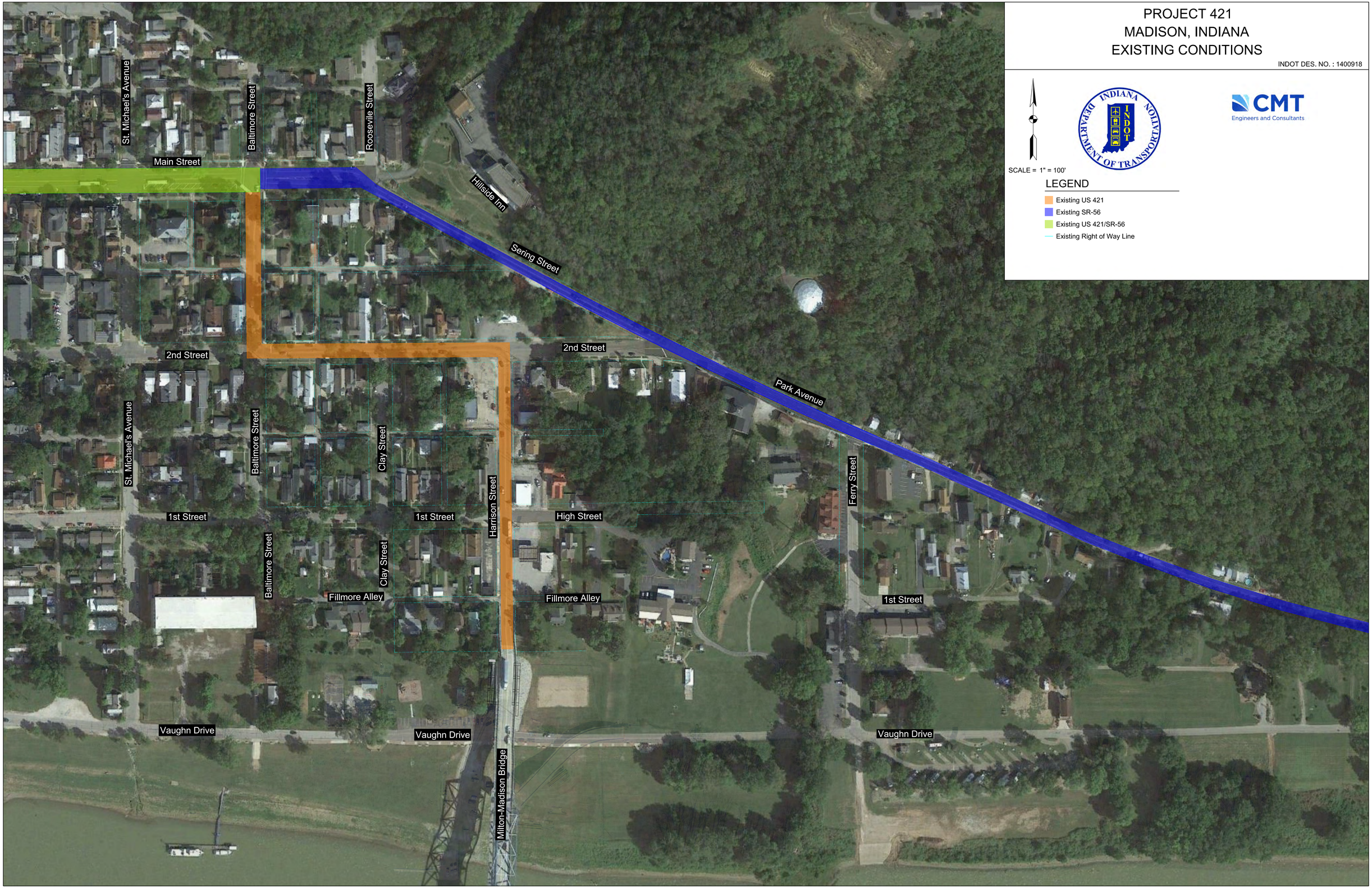

PROJECT 421
MADISON, INDIANA
RELOCATION MAP

INDOT DES. NO. : 1400918

SCALE = 1" = 100'

LEGEND

- Relocation
- Existing Property Line

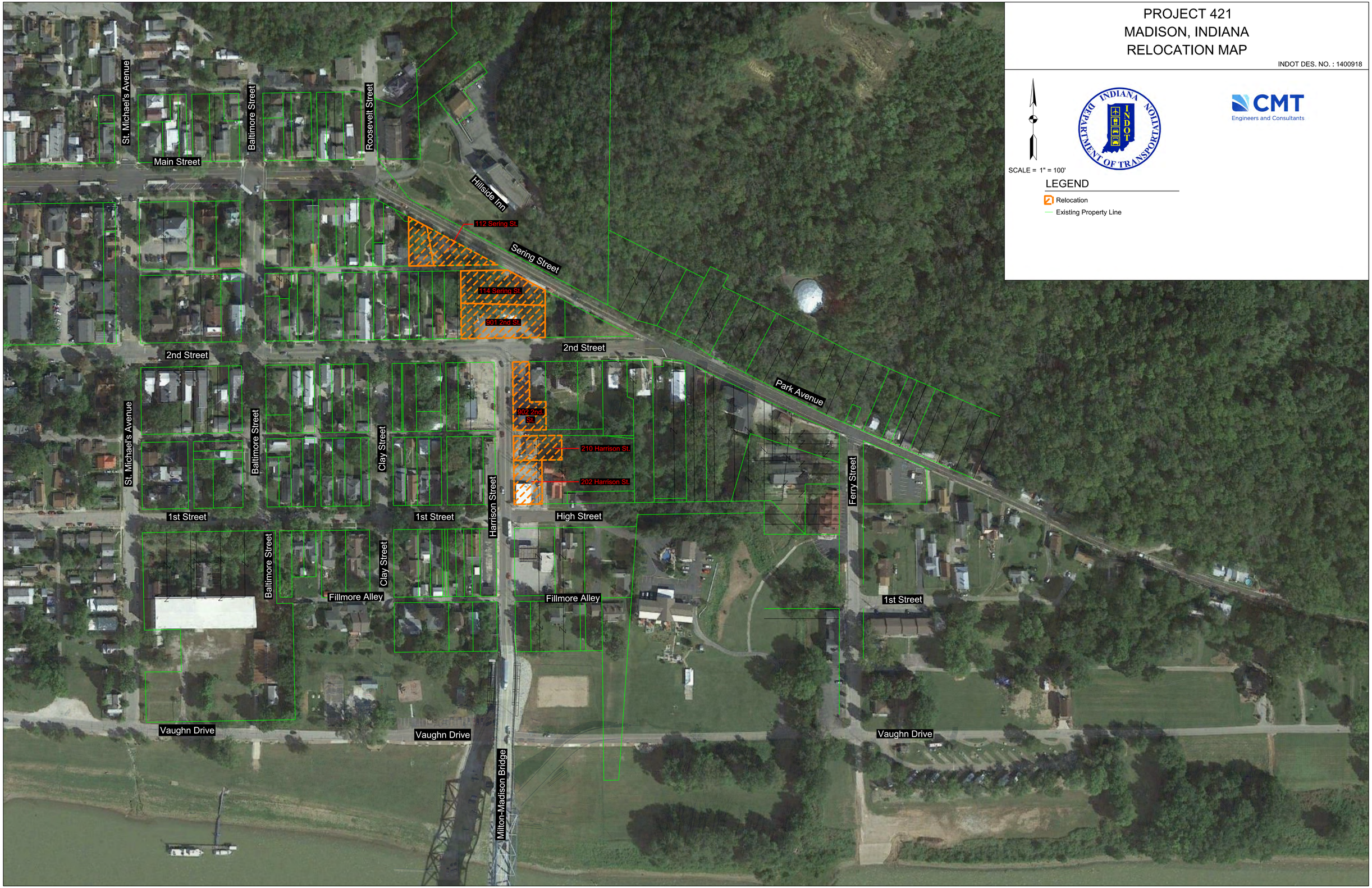

PROJECT 421
MADISON, INDIANA
ALTERNATIVE 6

INDOT DES. NO. : 1400918

SCALE = 1" = 100'

LEGEND

- Pavement
- Curb/Curb and Gutter/Driveway
- Sidewalk/Path
- Grass
- Retaining Wall
- Construction Limits
- Proposed Right of Way Line
- Contributing to NHL & NRHP
- Non-Contributing to NRHP / Outside NHL
- Contributing to NRHP / Outside NHL
- Non-Contributing to NHL & NRHP
- Contributing to NRHP / Non-Contributing to NHL
- APE
- NHLD Boundary
- Structure
- Site
- Object
- Temporary Right of Way Line
- Existing Right of Way Line

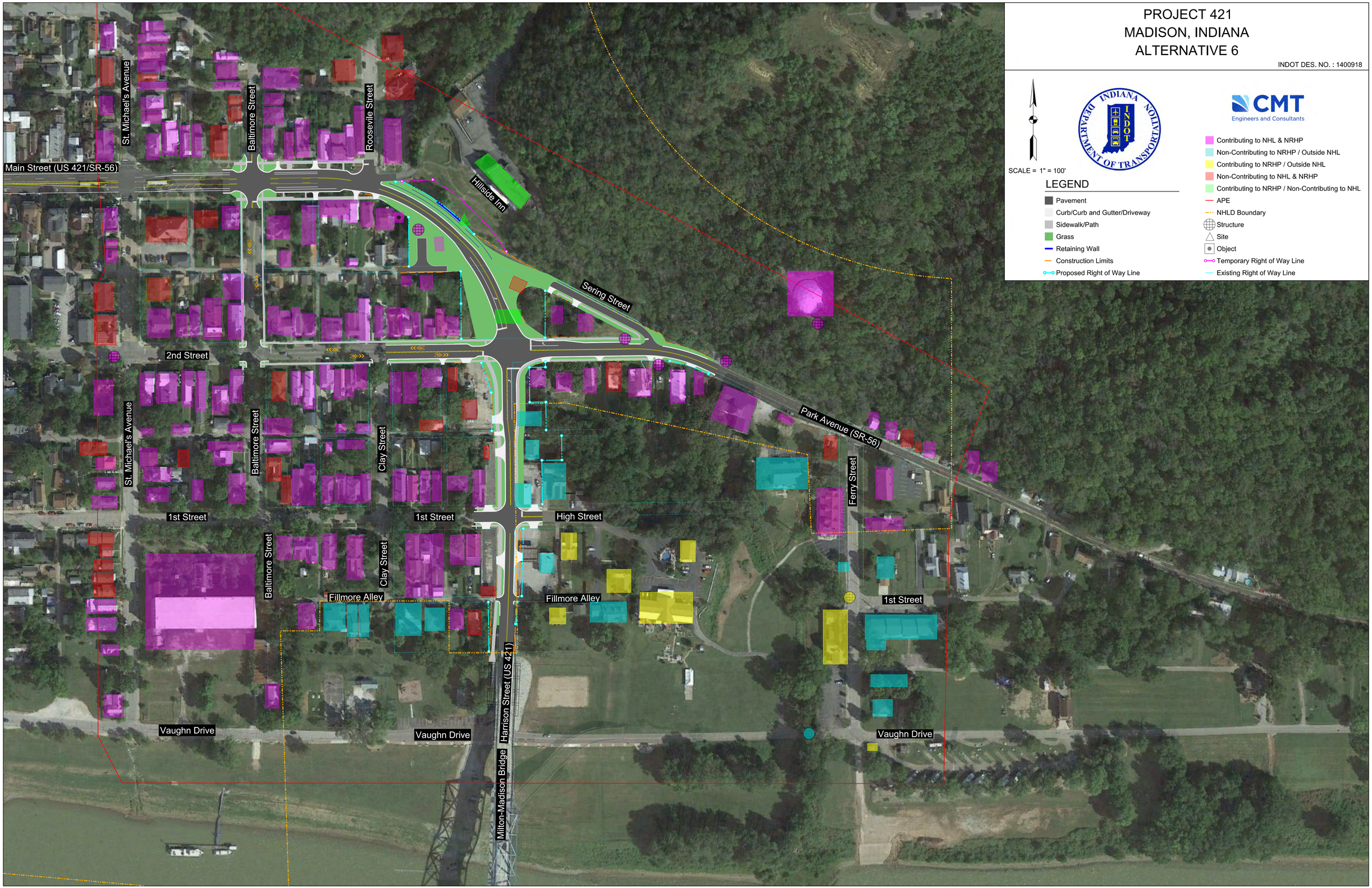

Project 421
Des. No.: 1400918
Madison, Indiana

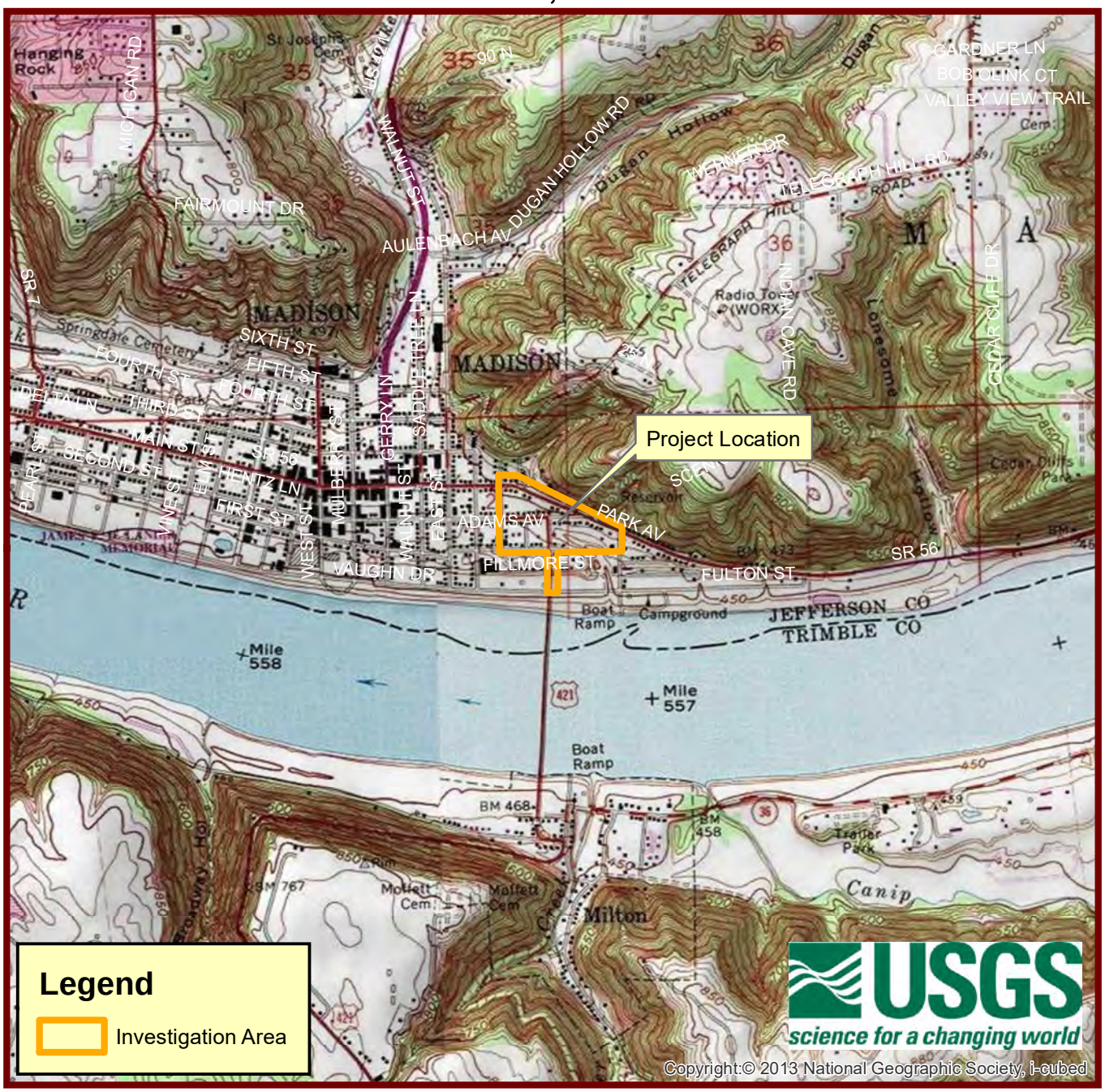

2,500 1,250 0 2,500 5,000 7,500 10,000 Feet

United States Geological Survey Quadrangle

Indiana Department of Transportation
Environmental Services
Ecology & Waterway Permitting
100 North Senate Avenue, Room N642
Indianapolis, Indiana 46204

N W E S

Project 421
Des. No.: 1400918
Madison, Indiana

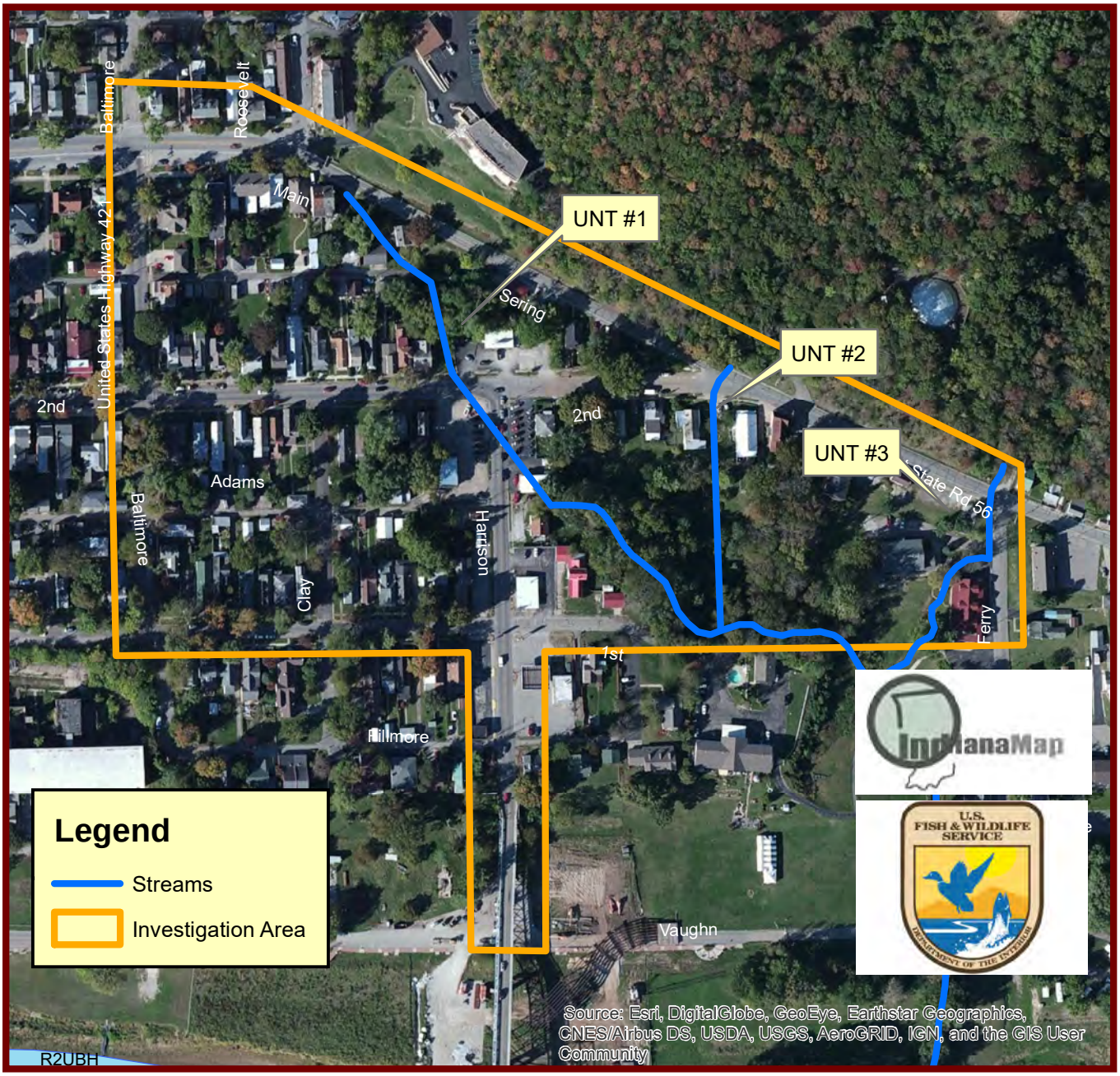

300 150 0 300 600 900 1,200 Feet

UNITED Consulting

National Wetlands Inventory Map

Indiana Department of Transportation
Environmental Services
Ecology & Waterway Permitting
100 North Senate Avenue, Room N642
Indianapolis, Indiana 46204

N W E S

Project 421
Des. No.: 1400918
Madison, Indiana

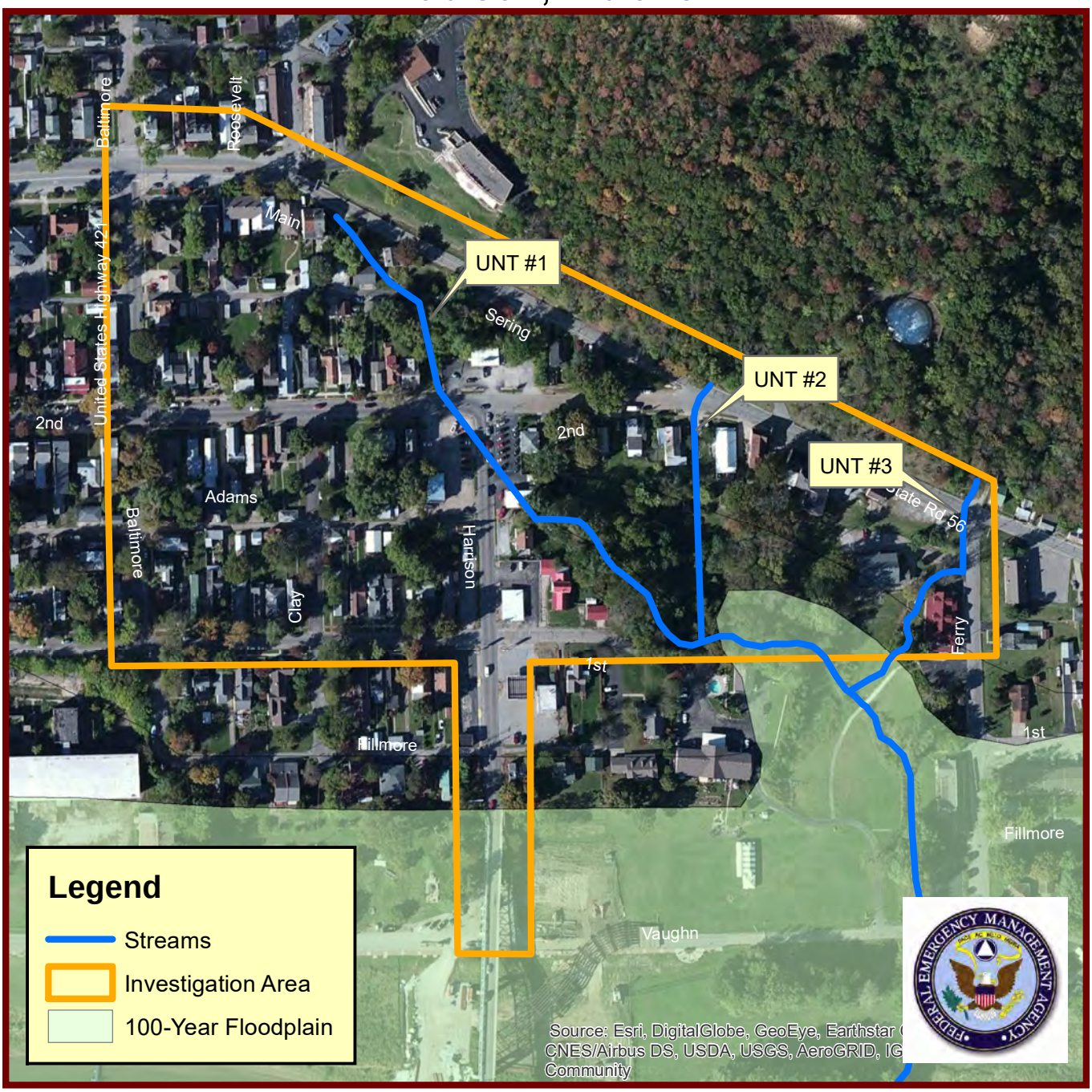

300 150 0 300 600 900 1,200 Feet

UNITED Consulting

Digital Flood Insurance Rate Map

Indiana Department of Transportation
Environmental Services
Ecology & Waterway Permitting
100 North Senate Avenue, Room N642
Indianapolis, Indiana 46204

N W E S

Photo Orientation Map
Project 421
Des. No.: 1400918
Madison, Indiana

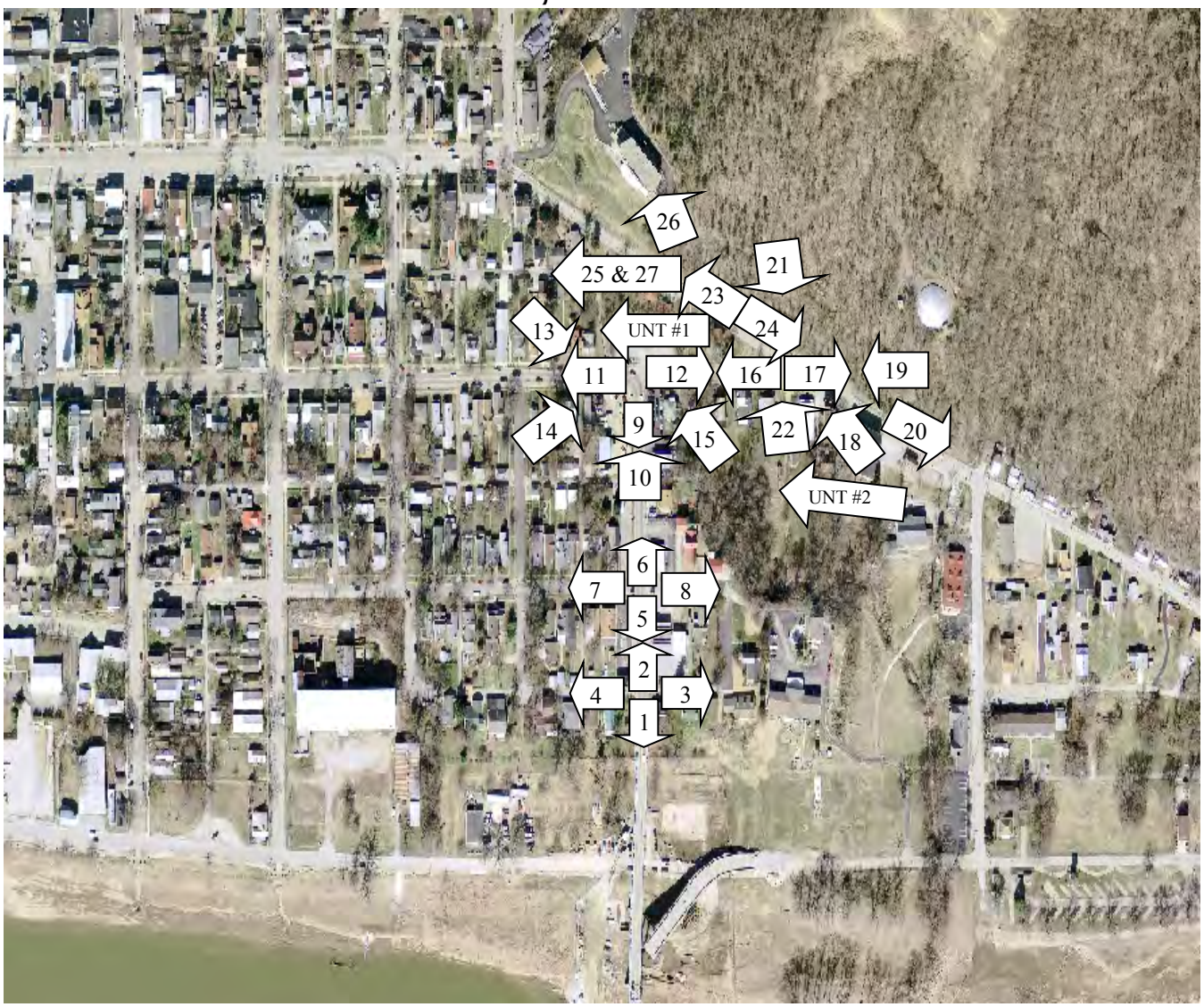

Project: Project 421
Applicant: Indiana Department of Transportation
Agent: United Consulting
Date: August 24, 2017

Photo Orientation Map
Project 421
Des. No.: 1400918
Madison, Indiana

Project: Project 421
Applicant: Indiana Department of Transportation
Agent: United Consulting
Date: August 24, 2017

Photograph #1: Looking south along US 421 from south end of project.

Photograph #2: Looking north along US 421 from south end of project.

Photograph #3: Looking east toward Fillmore Street from US 421.

Photograph #4: Looking west toward Fillmore Street from US 421.

Photograph #5: Looking south along US 421 south of 1st Street.

Photograph #6: Looking north along US 421 north of 1st Street.

Photograph #7: Looking west along 1st Street from US 421.

Photograph #8: Looking east along 1st Street from US 421.

Photograph #9: Looking south along US 421 from just south of 2nd Street/US 421.

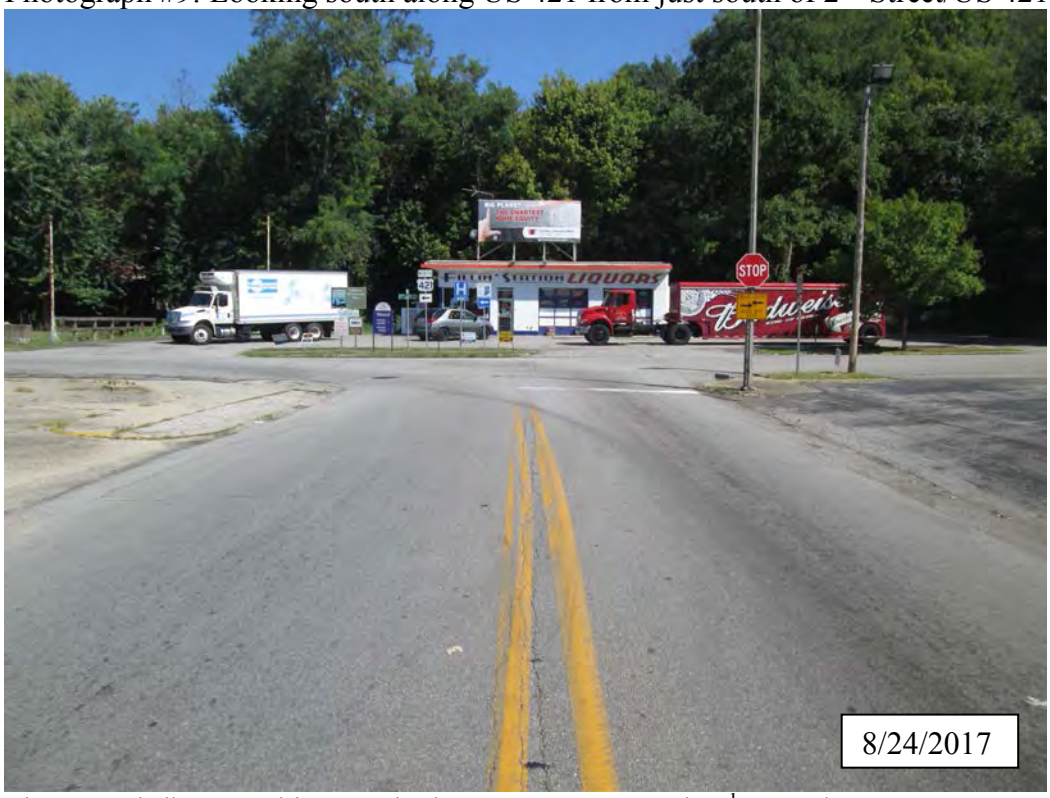

Photograph #10: Looking north along US 421 toward 2nd Street/US 421.

Photograph #11: Looking west along 2nd Street/US 421.

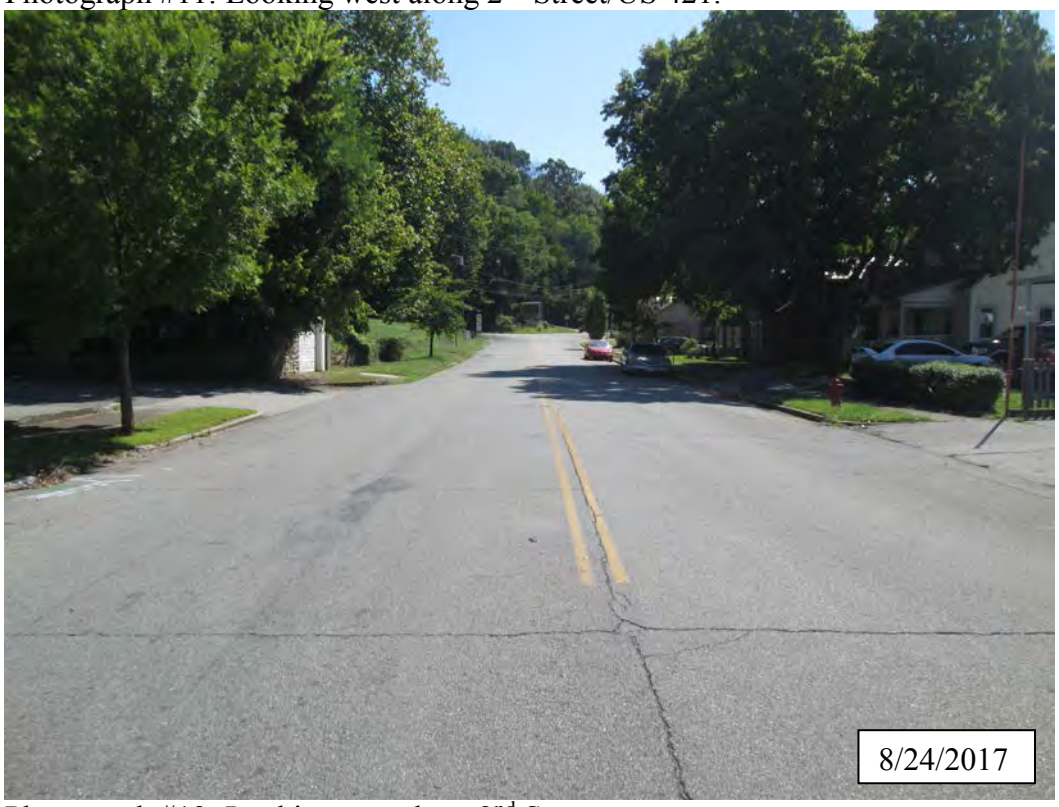

Photograph #12: Looking east along 2nd Street.

Photograph #13: Looking southeast across 2nd Street/US 421 from UNT #1.

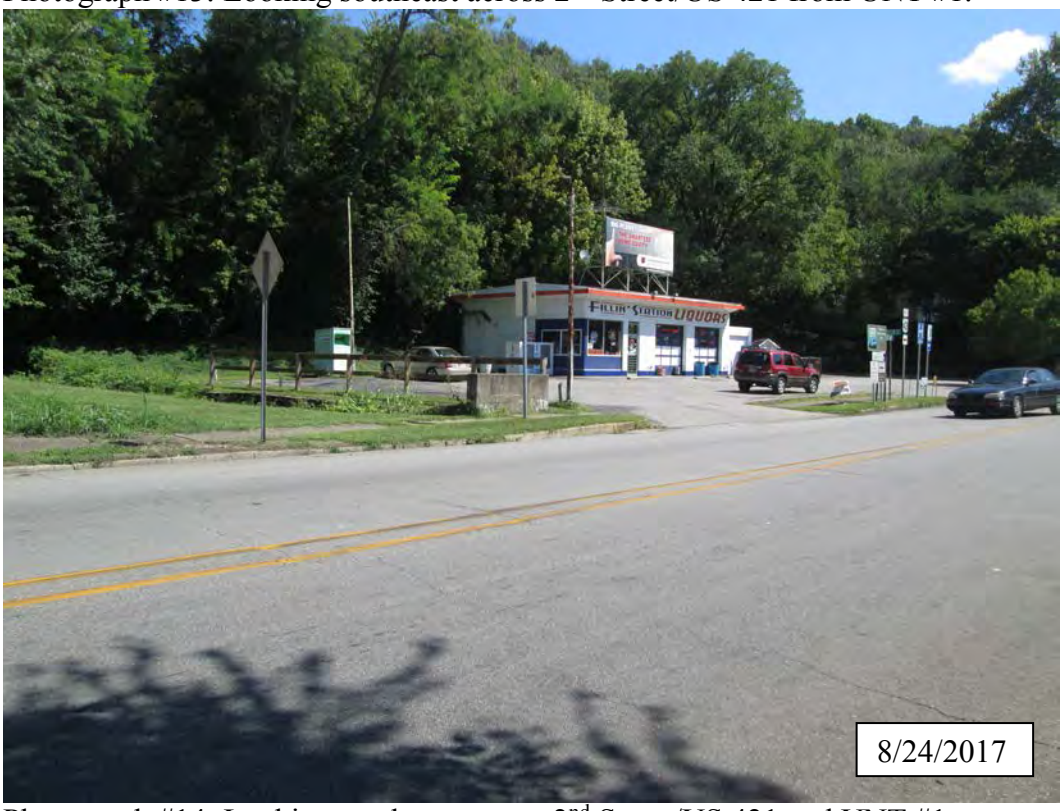

Photograph #14: Looking northeast across 2nd Street/US 421 and UNT #1.

Photograph #15: Looking northwest from 2nd Street toward proposed new roadway.

Photograph #16: Looking west along 2nd Street toward US 421.

Photograph #17: Looking along 2nd Street toward SR 56.

Photograph #18: Looking northwest toward intersection of 2nd Street and SR 56.

Photograph #19: Looking west along SR 56 toward 2nd Street.

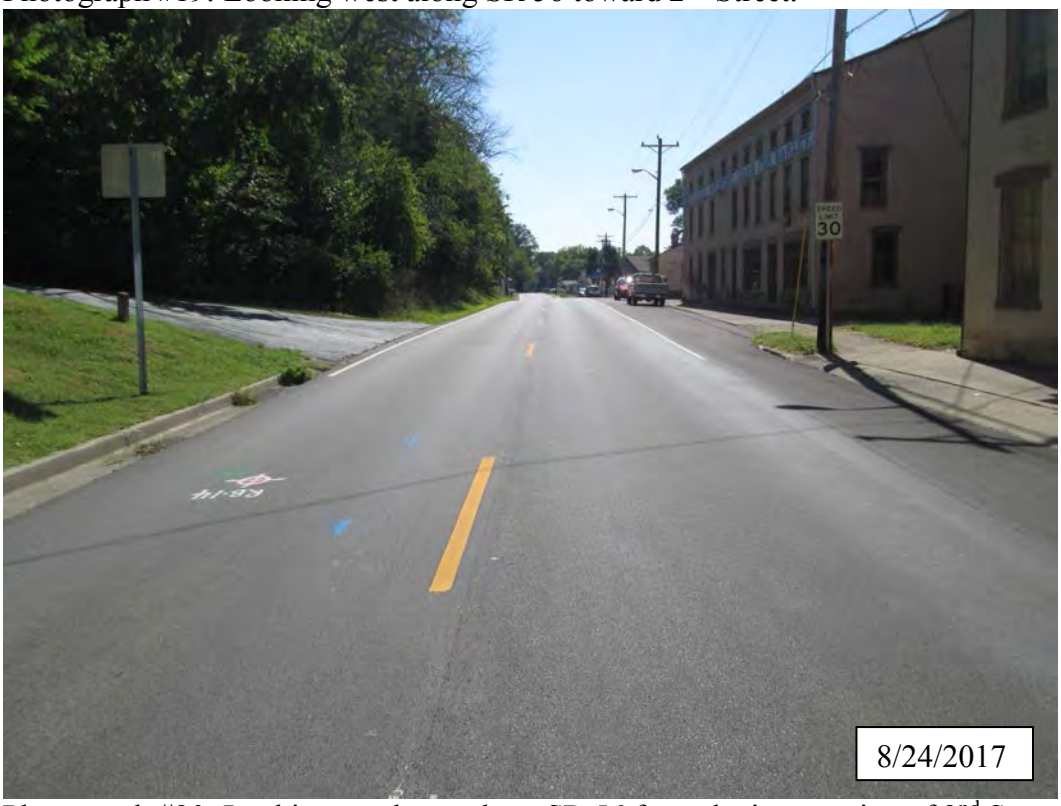

Photograph #20: Looking southeast along SR 56 from the intersection of 2nd Street.

Photograph #21: Looking south along UNT #2.

Photograph #22: Looking north along UNT #2.

Photograph #23: Looking northwest along SR 56 west of 2nd Street.

Photograph #24: Looking southeast along SR 56 west of 2nd Street.

Photograph #25: Looking west toward Hentz Lane from SR 56.

Photograph #26: Looking northwest across SR 56 from Hentz Lane.

Photograph #27: Looking west along Hentz Lane from SR 56.

Photograph #28: Looking northwest toward UNT #1 from Hentz Lane.

Photograph #29: Looking southeast toward UNT #1 from Hentz Lane.

Photograph #30: Looking south along UNT #1 toward 2nd Street/US 421.

Photograph #31: Looking north along UNT #1 toward Hentz Lane.

Photograph #32: Looking south along UNT #1 toward 2nd Street/US 421.

Photograph #33: Looking north along UNT #1 from 2nd Street/US 421.

Photograph #34: Looking northwest toward proposed new roadway from Hentz Lane.

Photograph #35: Looking southeast toward proposed new roadway from Hentz Lane.

Photograph #36: Looking southeast toward proposed new roadway from SR 56.

Photograph #37: Looking northwest along SR 56 toward Roosevelt Street.

Photograph #38: Looking northeast across SR 56 toward Roosevelt Street.

Photograph #39: Looking east along SR 56 at intersection of Roosevelt Street.

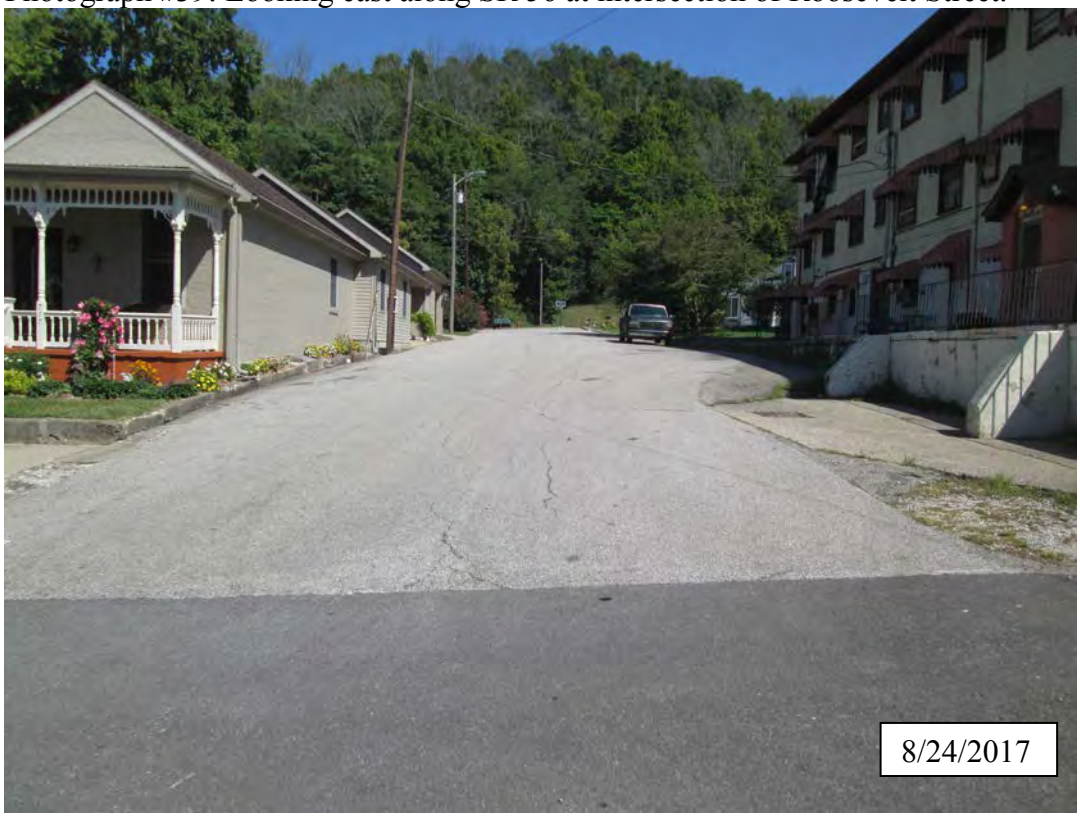

Photograph #40: Looking north along Roosevelt Street from SR 56.

Photograph #41: Looking west along SR 56 at intersection of Roosevelt Street.

Photograph #42: Looking east along SR 56 from east of Baltimore Street.

Photograph #43: Looking west along SR 56 toward intersection of Baltimore Street.

Photograph #44: Looking north along Baltimore Street from SR 56.

Photograph #45: Looking east along SR 56/US 421 toward Baltimore Street.

Photograph #46: Looking south along Baltimore Street/US 421 from SR 56.

Photograph #47: Looking east along SR 56 from the intersection of Baltimore Street.

Photograph #48: Looking north along Baltimore Street/US 421 toward SR 56.

Photograph #49: Looking west along 2nd Street/US 421 at Clay Street.

Photograph #50: Looking east along 2nd Street/US 421 at Clay Street.

PROJECT	DESIGNATION
1400918	1400918
CONTRACT	
R-37592	

INDIANA DEPARTMENT OF TRANSPORTATION

ROAD PLANS

ROUTE: US 421 NEW ROAD CONSTRUCTION

PROJECT NO. 1400918 P.E.
1400918 R/W
1400918 CONST.

TRAFFIC DATA		US 421	SR 56	2nd Street
A.A.D.T.	(2020)	12,223 V.P.D.	3,821 V.P.D.	1,774 V.P.D.
A.A.D.T.	(2040)	15,826 V.P.D.	9,948 V.P.D.	2,297 V.P.D.
D.H.V	(2040)	1.472 V.P.H.	460 V.P.H.	214 V.P.H.
DIRECTIONAL DISTRIBUTION		53 %	53 %	51 %
TRUCKS		10 % A.A.D.T.	10 % A.A.D.T.	2 % A.A.D.T.
		9.3 % D.H.V.	9.3 % D.H.V.	9.3 % D.H.V.

DESIGN DATA	US 421	SR 56	2nd Street
DESIGN SPEED	30 M.P.H.	30 M.P.H.	30 M.P.H.
PROJECT DESIGN CRITERIA	4R, NON FREEWAY	4R, NON FREEWAY	4R, NON FREEWAY
FUNCTIONAL CLASSIFICATION	PRINCIPAL ARTERIAL	PRINCIPAL ARTERIAL	MINOR ARTERIAL
RURAL/URBAN	URBAN	URBAN	URBAN
TERRAIN	LEVEL	LEVEL	LEVEL
ACCESS CONTROL	NONE	NONE	NONE

PROJECT LOCATION SHOWN BY
JEFFERSON COUNTY

LATITUDE: 38° 44' 06" N LONGITUDE: 85° 22' 11" W

STAGE I PLANS
NOVEMBER 3, 2016

End Incidental Construction
Sta. 88+37.00
Line PR-E

End Construction
Sta. 82+60.00
Line PR-E

Begin Incidental Construction
Sta. 195+65.00
Line PR-D

Begin Construction
Sta. 199+30.00
Line PR-D

Project Description:

New road construction at US 421 and SR 56 is located on the Indiana border of Ohio River and immediately adjacent to the Milton - Madison Bridge, in Section 2, T-3-N, R-10-E, Madison Township, Jefferson County, Indiana.

Gross Length: 0.32 MILES

Net Length: 0.32 MILES

Maximum Grade: 4.64%

End Construction
Sta. 207+65.00
Line PR-D

Begin Construction
Sta. 66+91.75
Line PR-E

Vicinity Map
Jefferson County
Scale: 1" = 500'

Begin Incidental Construction
Sta. 65+75.00
Line PR-E

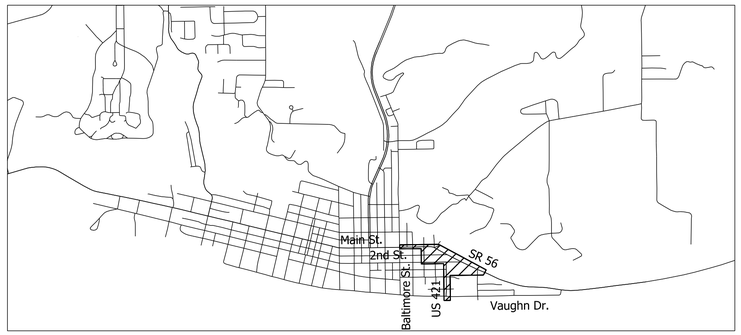

Project Area

Location Map
Jefferson County
Scale: 1" = 2000'

INDIANA DEPARTMENT OF TRANSPORTATION
STANDARD SPECIFICATIONS DATED 2016
TO BE USED WITH THESE PLANS

CMT Engineers and Consultants
8790 PURDUE ROAD
INDIANAPOLIS, IN 46268-6128
PHONE: (317) 298-4500

© Copyright CMT, Inc.

NOT FOR CONSTRUCTION

PLANS PREPARED BY: CRAWFORD, MURPHY & TILLY, INC. (317) 298-4500 PHONE NUMBER

CERTIFIED BY: 1/19/2017 DATE

APPROVED FOR LETTING: INDIANA DEPARTMENT OF TRANSPORTATION DATE

BRIDGE FILE
N/A
DESIGNATION
1400918

SURVEY BOOK	SHEETS
N/A	1 of 51
CONTRACT	PROJECT
R-37592	1400918

pw:\\cmtengr-pw.bentley.com:cmtengr-pw-02\Documents\Projects\INDOT\15709-01\Draw\MS\Sht_Title.dgn

UTILITIES

Utility	Contace Name	Address	City/State/Zip	Phone	Email
Cinergy Metronet	Rick Bowen	3701 Communication Way	Evansville, IN 47715	(812)213-1340	rick.bowen@metronet.com
Duke Energy	Tim Umbaugh	1619 W. Defenbaugh	Kokomo, IN 46902	(812)375-5828	tim.umbaugh@duke-energy.com
Frontier Communications of Indiana	Mark Gibson	8001 West Jefferson Blvd	Fort Wayne, IN 46804	(812)522-1502	mark.e.gibson@ftr.com
City of Madison - Storm	Brian Jackson	101 W. Main Street	Madison, IN 47250	(812)265-8326	utilitymanager@madison-in.gov
City of Madison - Sanitary	Brian Jackson	101 W. Main Street	Madison, IN 47250	(812)265-8326	utilitymanager@madison-in.gov
City of Madison - Water	Brian Jackson	101 W. Main Street	Madison, IN 47250	(812)265-8326	utilitymanager@madison-in.gov
Charter - Time Warner Cable	Kevin Mercer	1900 N. Fares Avenue	Evansville, IN 47711	(502)357-4724	kevin.mercer@charter.com
Vectren - Gas	Paul Schroeder	1 North Main Street	Evansville, IN 47702	(812)948-4954	pschroeder@vectren.com

GENERAL NOTES

1. Access to all entrances shall be maintained at all times.
2. The contractor shall ensure that safe access is maintained to all residences and businesses during all phases of construction.
3. All removal items not paid for directly will be included in the lump sum cost of clearing right of way, per Standard Specifications 201 and 202.
4. It is contractor's responsibility to contact any and all utility companies within the limits of the project 3 weeks prior to any construction.
5. Any borrow not obtained within the limits of the right-of-way shall be as a specified in INDOT Std. Spec. 203.08.
6. Existing curb types may vary by street. Contractor shall inspect curb prior to beginning work to assure proper fit and transition.
7. For any bid item for which a quanitity is bid (see itemized proposal), prior written approval from the engineer to exceed the bid quantity is required or no payment will be made for the overage.
8. All drainage structure adjustments shall use 2 In. concrete riser rings. Bricks will not be allowed.
9. Contractor to ensure that positive drainage is maintained at all intersections and along curb and gutter flowlines after the completion of curb ramp construction.
10. ADA compliant access to all businesses and residences requiring ADA access shall be maintained at all times.
11. All utility information shall be considered QL-D unless otherwise indicated and is for informational purpose only. The contractor is responsible for locating and coordinating with utility companies in accordance with the plans and specifications.
12. Contractor shall be aware of the project site conditions and shall take these conditions into account when excavating, ordering materials, or performing any other activities.

INDEX

SHEET NO.	DRAWINGS INDEX
1	TITLE SHEET
2	INDEX SHEET
3 - 6	TYPICAL SECTIONS
7	TYPICAL CROSS SECTIONS CONSTRUCTION DETAILS
8 - 11	LOCATION CONTROL ROUTE SURVEY
12 - 20	PLAN AND PROFILE
21 - 26	SUPER ELEVATION
27	GENERAL PLAN AND DETAILS
28 - 51	CROSS SECTIONS

REVISIONS

SHEET NO.	DATE	REVISED

NOT FOR CONSTRUCTION

RECOMMENDED FOR APPROVAL _____ 1/19/2017
DESIGN ENGINEER DATE

DESIGNED: GTB 1/19/2017 DRAWN: RY 1/19/2017
CHECKED: AJB 1/19/2017 CHECKED: AJB 1/19/2017

INDIANA
DEPARTMENT OF TRANSPORTATION

INDEX & GENERAL NOTES

SCALE	BRIDGE FILE
N/A	N/A
	DESIGNATION
	1400918
SURVEY BOOK	SHEETS
N/A	2 of 51
CONTRACT	PROJECT
IR-35485	1400918

pw:\\cmtengr-pw.bentley.com:cmtengr-pw-02\Documents\Projects\INDOT\15709-01\Draw\MS\Sht_Index.dgn

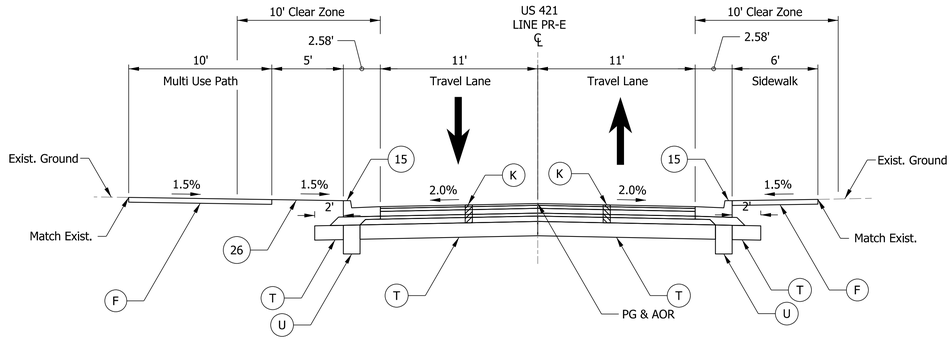

TYPICAL SECTION - US 421

Sta. 66+91.75 "PR-E" to Sta. 69+21.00 "PR-E"

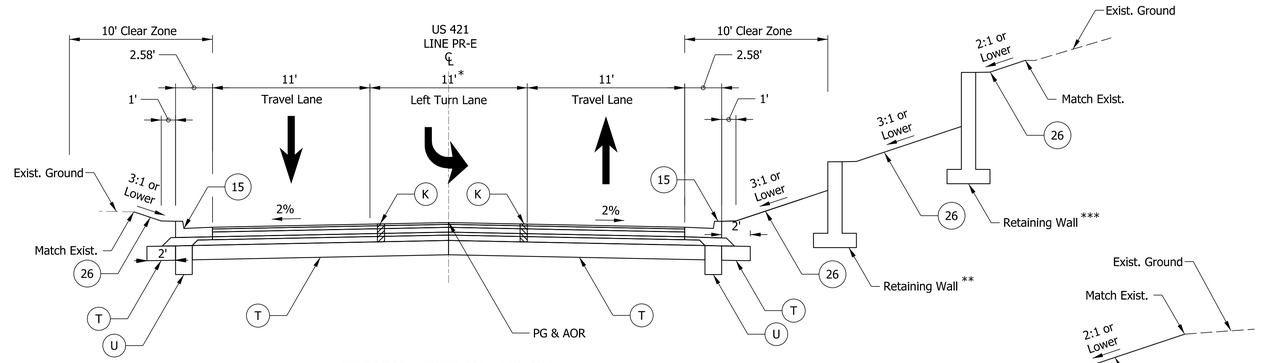

TYPICAL SECTION - US 421

Sta. 73+50.00 "PR-E" to Sta. 76+35.00 "PR-E"

Note: * Varies from 11" at Sta. 75+80.00 to 0' at Sta. 76+35.00
** Retaining wall starts at Sta. 75+85.00
*** Retaining wall starts at Sta. 75+45.00

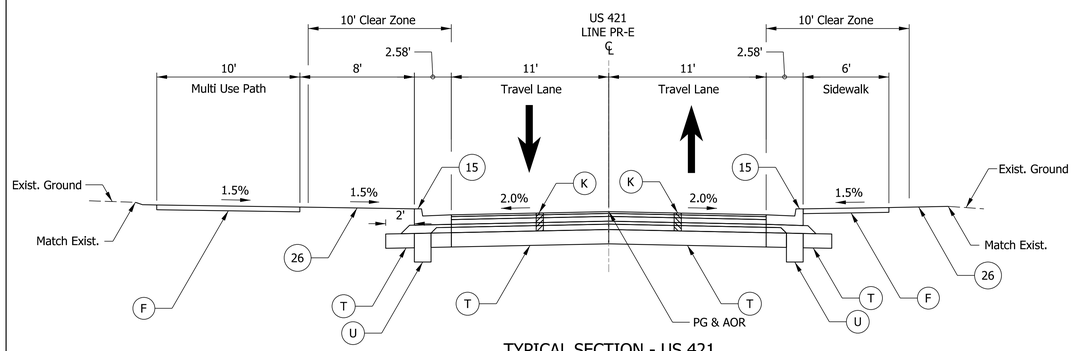

TYPICAL SECTION - US 421

Sta. 69+21.00 "PR-E" to Sta. 70+96.50 "PR-E"

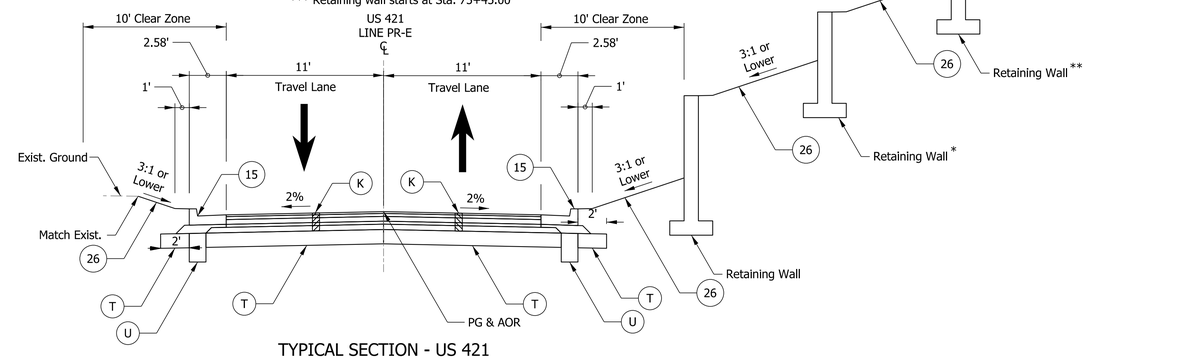

TYPICAL SECTION - US 421

Sta. 76+35.00 "PR-E" to Sta. 77+45.00 "PR-E"

Note: * Retaining wall ends at Sta. 77+95.00
** Retaining wall starts at Sta. 76+60.00 and ends at Sta. 77+30.00

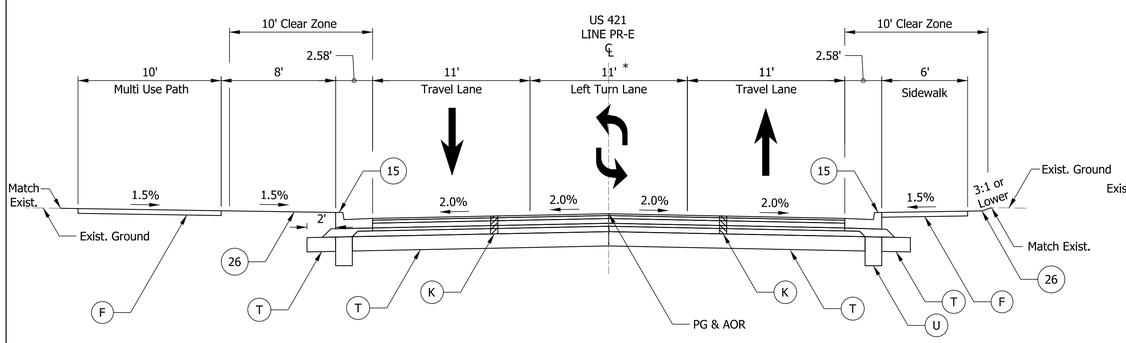

TYPICAL SECTION - US 421

Sta. 70+96.50 "PR-E" to Sta. 75+45.00 "PR-E"

Note: * Varies from 0'-0" at Sta. 70+96.50 to 11'-0" at Sta. 71+51.50

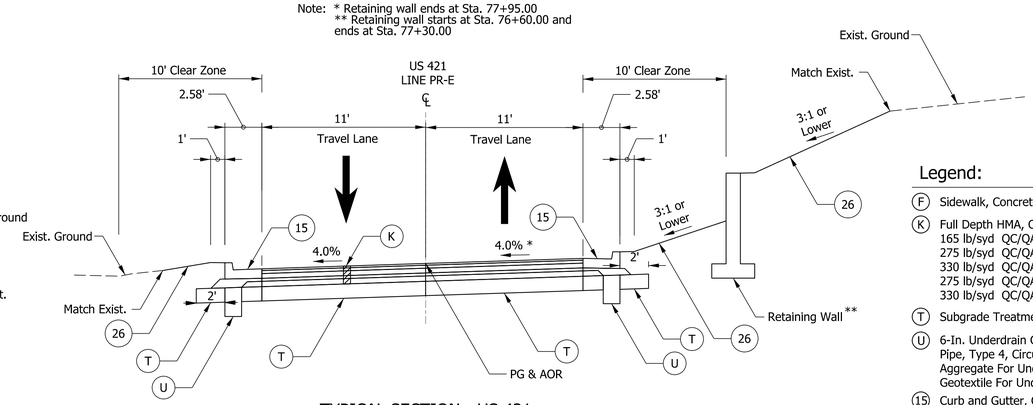

TYPICAL SECTION - US 421

Sta. 77+45.00 "PR-E" to Sta. 78+65.00 "PR-E"

Note: * Varies from -2.0% at Sta. 77+45.00 to 4.0% at Sta. 78+65.00
** Retaining wall ends at Sta. 78+50.00

Legend:

- (F) Sidewalk, Concrete
- (K) Full Depth HMA, Composed of:
  165 lb/syd QC/QA HMA, _, 70 Surface, 9.5 mm, on
  275 lb/syd QC/QA HMA, _, 70 Intermediate, 19 mm, on
  330 lb/syd QC/QA HMA, _, 64 Base, 19 mm, on
  275 lb/syd QC/QA HMA, _, 76 Base, OG 19 mm, on
  330 lb/syd QC/QA HMA, _, 64 Base, 19 mm
- (T) Subgrade Treatment, Type _
- (U) 6-In. Underdrain Composed Of
  Pipe, Type 4, Circular, 6 In.
  Aggregate For Underdrains
  Geotextile For Underdrains
- (15) Curb and Gutter, Combined
- (26) Sodding
- PG Profile Grade
- AOR Axis Of Rotation

NOT FOR CONSTRUCTION

RECOMMENDED FOR APPROVAL 1/19/2017
DESIGN ENGINEER DATE

DESIGNED: GTB 1/19/2017 DRAWN: GTB 1/19/2017
CHECKED: AJB 1/19/2017 CHECKED: AJB 1/19/2017

INDIANA
DEPARTMENT OF TRANSPORTATION

TYPICAL CROSS SECTIONS
LINE "PR-E"

SCALE	BRIDGE FILE
N.T.S.	
	DESIGNATION
	1400918
SURVEY BOOK	SHEETS
	3 of 51
CONTRACT	PROJECT
R-37592	1400918

pw:\\cmtengr-pw.bentley.com:cmtengr-pw-02\Documents\Projects\INDOT\15709-01\Draw\MS\Sht_TypicalSections.dgn

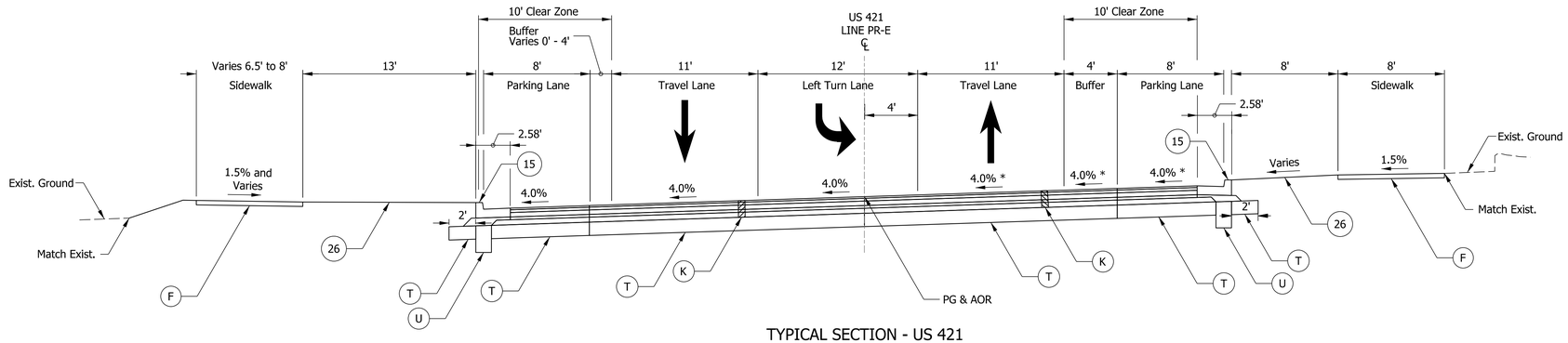

TYPICAL SECTION - US 421

Sta. 78+65.00 "PR-E" to Sta. 80+80.00 "PR-E"

Note: * Varies from 4% at Sta. 79+60.00 to -2% at Sta. 80+80.00

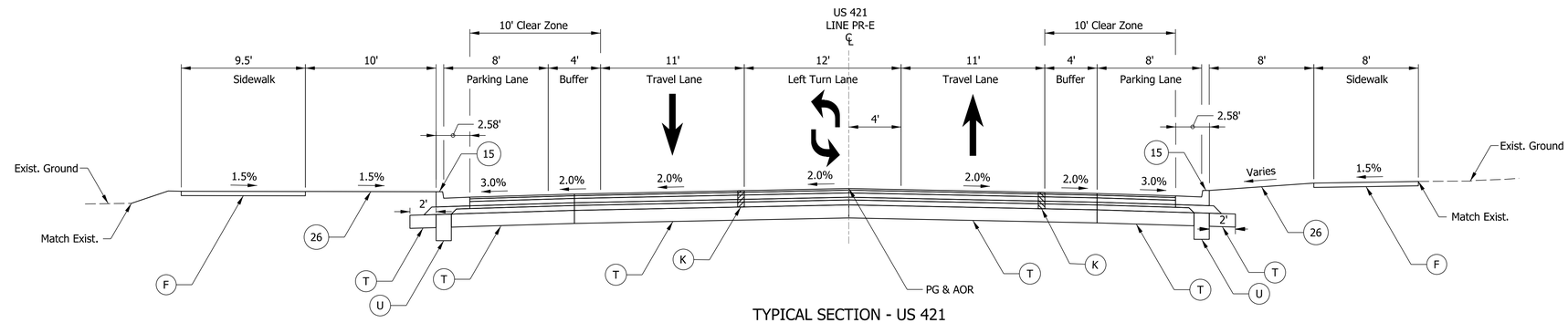

TYPICAL SECTION - US 421

Sta. 80+80.00 "PR-E" to Sta. 82+28.66 "PR-E"

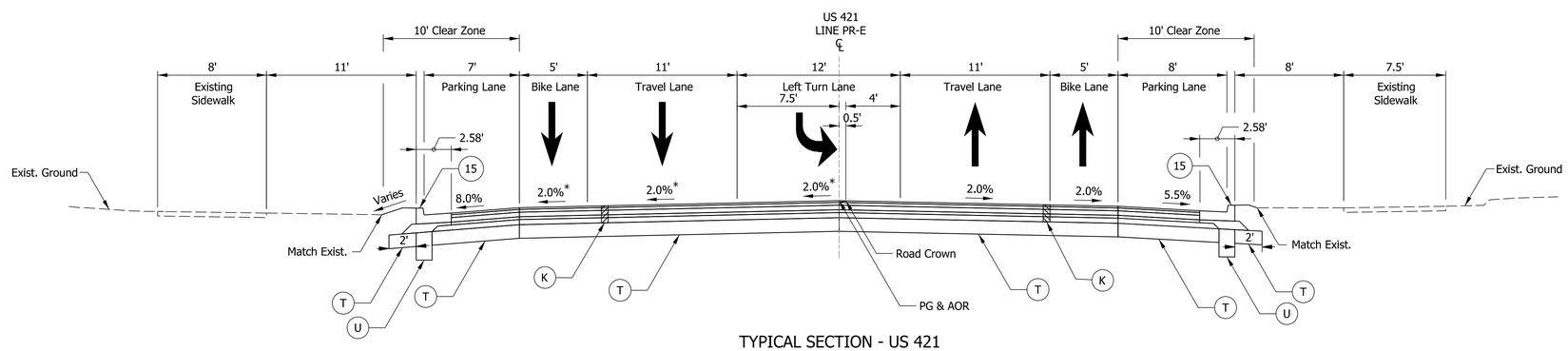

TYPICAL SECTION - US 421

Sta. 82+28.66 "PR-E" to Sta. 82+50.00 "PR-E"

Note: * Varies from 2.0% at Sta. 82+45.00 to 2.5% at Sta. 82+60.00

Legend:

- (F) Sidewalk, Concrete
- (K) Full Depth HMA, Composed of:
  165 lb/syd QC/QA HMA, _, 70 Surface, 9.5 mm, on
  275 lb/syd QC/QA HMA, _, 70 Intermediate, 19 mm, on
  330 lb/syd QC/QA HMA, _, 64 Base, 19 mm, on
  275 lb/syd QC/QA HMA, _, 76 Base, OG 19 mm, on
  330 lb/syd QC/QA HMA, _, 64 Base, 19 mm
- (T) Subgrade Treatment, Type _
- (U) 6-In. Underdrain Composed Of
  Pipe, Type 4, Circular, 6 In.
  Aggregate For Underdrains
  Geotextile For Underdrains
- (15) Curb and Gutter, Combined
- (26) Sodding
- PG Profile Grade
- AOR Axis Of Rotation

NOT FOR CONSTRUCTION

RECOMMENDED FOR APPROVAL _____ 1/19/2017
DESIGN ENGINEER DATE

DESIGNED: GTB 1/19/2017 DRAWN: GTB 1/19/2017
CHECKED: AJB 1/19/2017 CHECKED: AJB 1/19/2017

INDIANA
DEPARTMENT OF TRANSPORTATION

TYPICAL CROSS SECTIONS
LINE "PR-E"

SCALE	BRIDGE FILE
N.T.S.	
	DESIGNATION
	1400918
SURVEY BOOK	SHEETS
	4 of 51
CONTRACT	PROJECT
R-37592	1400918

pw:\\cmtengr-pw.bentley.com:cmtengr-pw-02\Documents\Projects\INDOT\15709-01\Draw\MS\Sht_TypicalSections.dgn

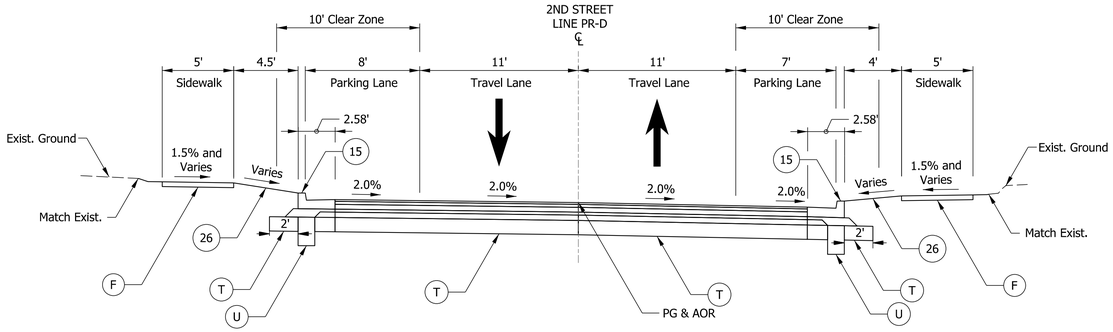

TYPICAL SECTION - 2ND STREET

Sta. 199+30.00 "PR-D" to Sta. 201+79.00 "PR-D"

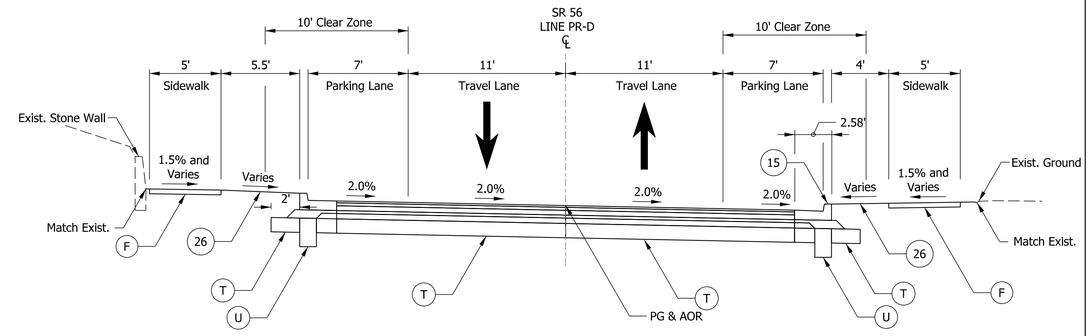

TYPICAL SECTION - SR 56

Sta. 203+75.00 "PR-D" to Sta. 205+43.08 "PR-D"

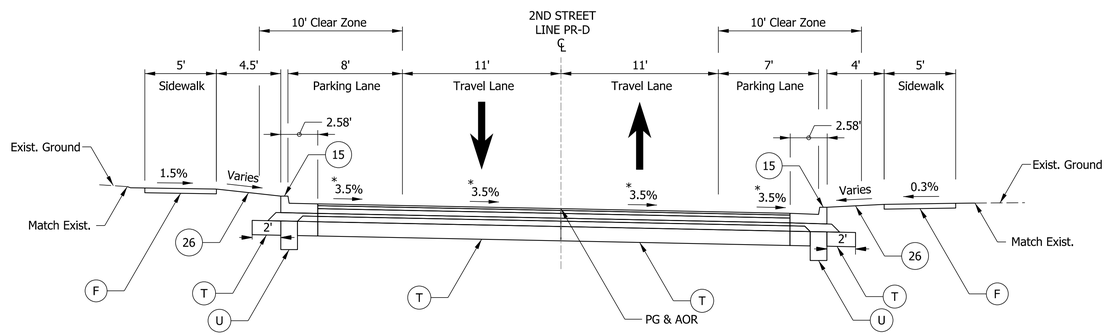

TYPICAL SECTION - 2ND STREET

Sta. 201+79.00 "PR-D" to Sta. 202+19.54 "PR-D"

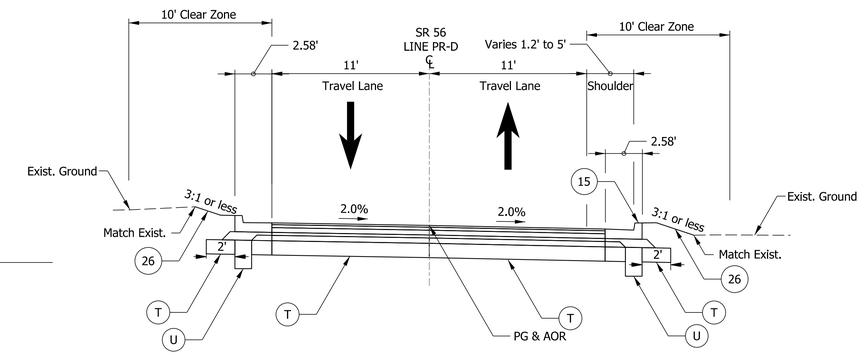

TYPICAL SECTION - SR 56

Sta. 205+43.08 "PR-D" to Sta. 207+30.00 "PR-D"

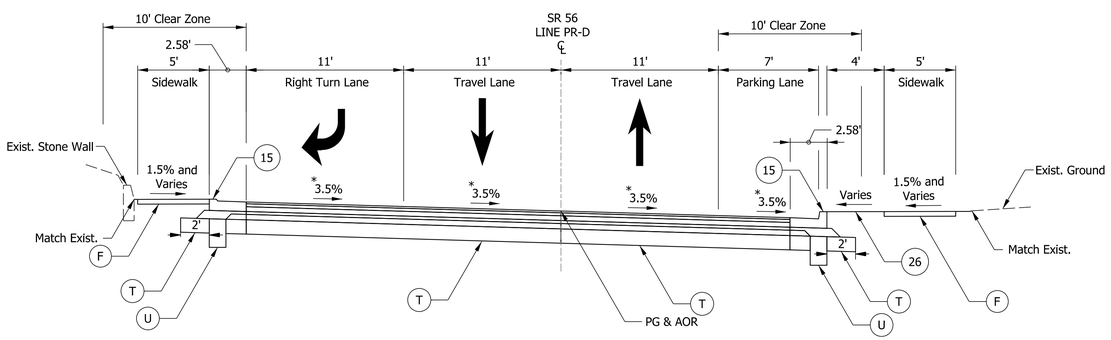

TYPICAL SECTION - SR 56

Sta. 202+52.54 "PR-D" to Sta. 203+75.00 "PR-D"

Note: * Varies from 2.0% at Sta. 202+16.50 to 2.0% at Sta. 203+72.50

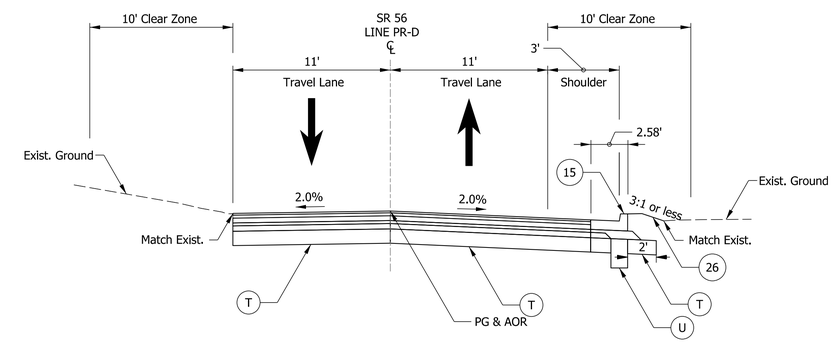

TYPICAL SECTION - SR 56

Sta. 207+30.00 "PR-D" to Sta. 207+65.00 "PR-D"

Legend:

- (F) Sidewalk, Concrete
- (T) Subgrade Treatment, Type _
- (U) 6-In. Underdrain Composed Of Pipe, Type 4, Circular, 6 In. Aggregate For Underdrains Geotextile For Underdrains
- (15) Curb and Gutter, Combined
- (26) Sodding
- PG Profile Grade
- AOR Axis Of Rotation

NOT FOR CONSTRUCTION

RECOMMENDED FOR APPROVAL _____ 1/19/2017
DESIGN ENGINEER DATE

DESIGNED: GTB 1/19/2017 DRAWN: GTB 1/19/2017
CHECKED: AJB 1/19/2017 CHECKED: AJB 1/19/2017

INDIANA
DEPARTMENT OF TRANSPORTATION

TYPICAL CROSS SECTIONS
LINE "PR-D"

SCALE	BRIDGE FILE
N.T.S.	
	DESIGNATION
	1400918
SURVEY BOOK	SHEETS
	5 of 51
CONTRACT	PROJECT
R-37592	1400918

pw:\\cmtengr-pw.bentley.com:cmtengr-pw-02\Documents\Projects\INDOT\15709-01\Draw\MS\Sht_TypicalSections.dgn

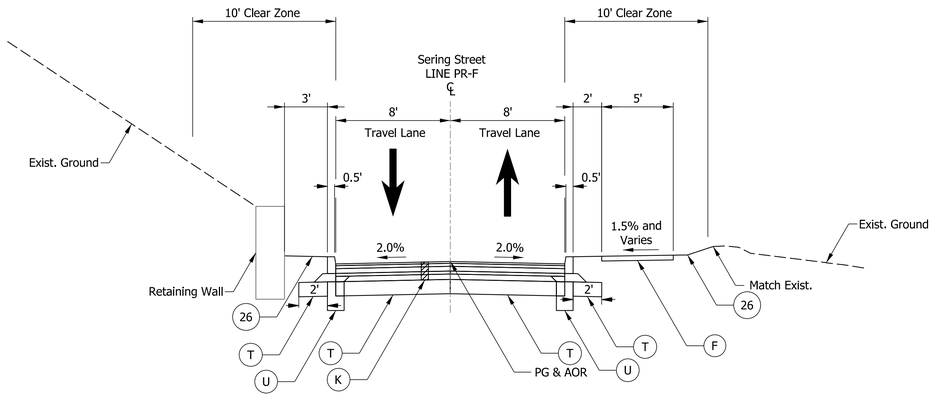

TYPICAL SECTION - SERING STREET

Sta. 12+00.00 "PR-F" to Sta. 13+40.00 "PR-F"

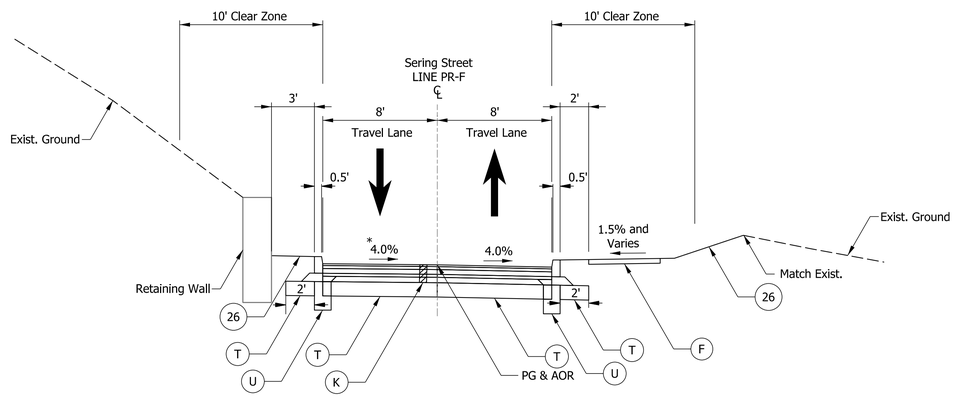

TYPICAL SECTION - SERING STREET

Sta. 13+40.00 "PR-F" to Sta. 15+00.62 "PR-F"

Note: * Varies from 2.0% at Sta. 13+40.00 to -4.0% at Sta. 14+60.00

Legend:

- (F) Sidewalk, Concrete
- (K) Full Depth HMA, Composed of:
  165 lb/syd QC/QA HMA, _, 70 Surface, 9.5 mm, on
  275 lb/syd QC/QA HMA, _, 70 Intermediate, 19 mm, on
  330 lb/syd QC/QA HMA, _, 64 Base, 19 mm, on
  275 lb/syd QC/QA HMA, _, 76 Base, OG 19 mm, on
  330 lb/syd QC/QA HMA, _, 64 Base, 19 mm
- (T) Subgrade Treatment, Type _
- (U) 6-In. Underdrain Composed Of
  Pipe, Type 4, Circular, 6 In.
  Aggregate For Underdrains
  Geotextile For Underdrains
- (15) Curb and Gutter, Combined
- (26) Sodding
- PG Profile Grade
- AOR Axis Of Rotation

NOT FOR CONSTRUCTION

RECOMMENDED FOR APPROVAL _____ 1/19/2017
DESIGN ENGINEER DATE

DESIGNED: GTB 1/19/2017 DRAWN: GTB 1/19/2017
CHECKED: AJB 1/19/2017 CHECKED: AJB 1/19/2017

INDIANA
DEPARTMENT OF TRANSPORTATION

TYPICAL CROSS SECTIONS
LINE "PR-F"

SCALE	BRIDGE FILE
N.T.S.	
	DESIGNATION
	1400918
SURVEY BOOK	SHEETS
	6 of 51
CONTRACT	PROJECT
R-37592	1400918

pw:\\cmtengr-pw.bentley.com:cmtengr-pw-02\Documents\Projects\INDOT\15709-01\Draw\MS\Sht_TypicalSections.dgn

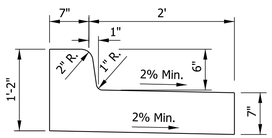

Curb and Gutter, Concrete, Modified

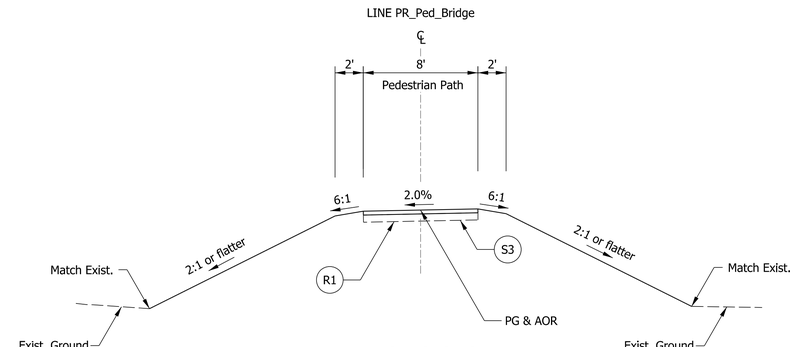

TYPICAL SECTION

Sta. 150+89.00 "PR-Ped_Bridge" to Sta. 151+50.97 "PR-Ped_Bridge"

Legend:

- (K1) 165 lb/syd QC/QA - HMA, 3, 70, Surface, 9.5mm
  275 lb/syd QC/QA - HMA, 3, 70, Intermediate, 19.0 mm
  330 lb/syd QC/QA - HMA, 2, 64, Base, 19.0 mm
  3-In. Compacted Aggregate, No. 53 Base
- (R1) 360 lb/syd, HMA for Sidewalk,
  6 In. Compacted Aggregate Base, No. 53
- (S1) Sungrade Treatment, TYPE IB
  (Cement Modification Only)
- (S3) Subgrade Treatment, Type II
- (U) 6-In. Underdrain Composed Of
  Pipe, Type 4, Circular, 6 In.
  Aggregate For Underdrains
  Geotexile For Underdrains
- (15) Curb And Gutter, Combined
- (26) Sodding

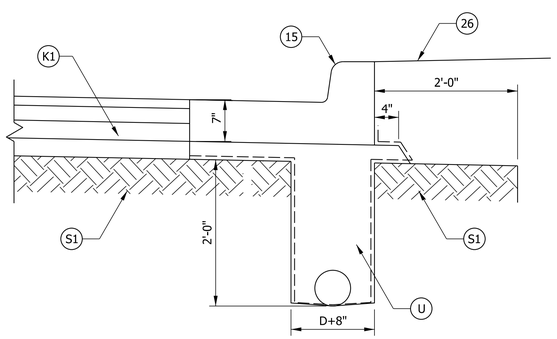

Modified Concrete Curb and Gutter Section For HMA
Pavement with Underdrain - Shoulder Side

NOT FOR CONSTRUCTION

RECOMMENDED FOR APPROVAL — DESIGN ENGINEER — 1/19/2017 DATE

DESIGNED: GTB 1/19/2017 DRAWN: RY 1/19/2017

CHECKED: AJB 1/19/2017 CHECKED: AJB 1/19/2017

INDIANA
DEPARTMENT OF TRANSPORTATION

TYPICAL CROSS SECTIONS
CONSTRUCTION DETAILS

SCALE	BRIDGE FILE
N.T.S.	
	DESIGNATION
	1400918
SURVEY BOOK	SHEETS
	7 of 51
CONTRACT	PROJECT
R-37592	1400918

pw:\\cmtengr-pw.bentley.com:cmtengr-pw-02\Documents\Projects\INDOT\15709-01\Draw\MS\Sht_Typical _Section_1.dgn

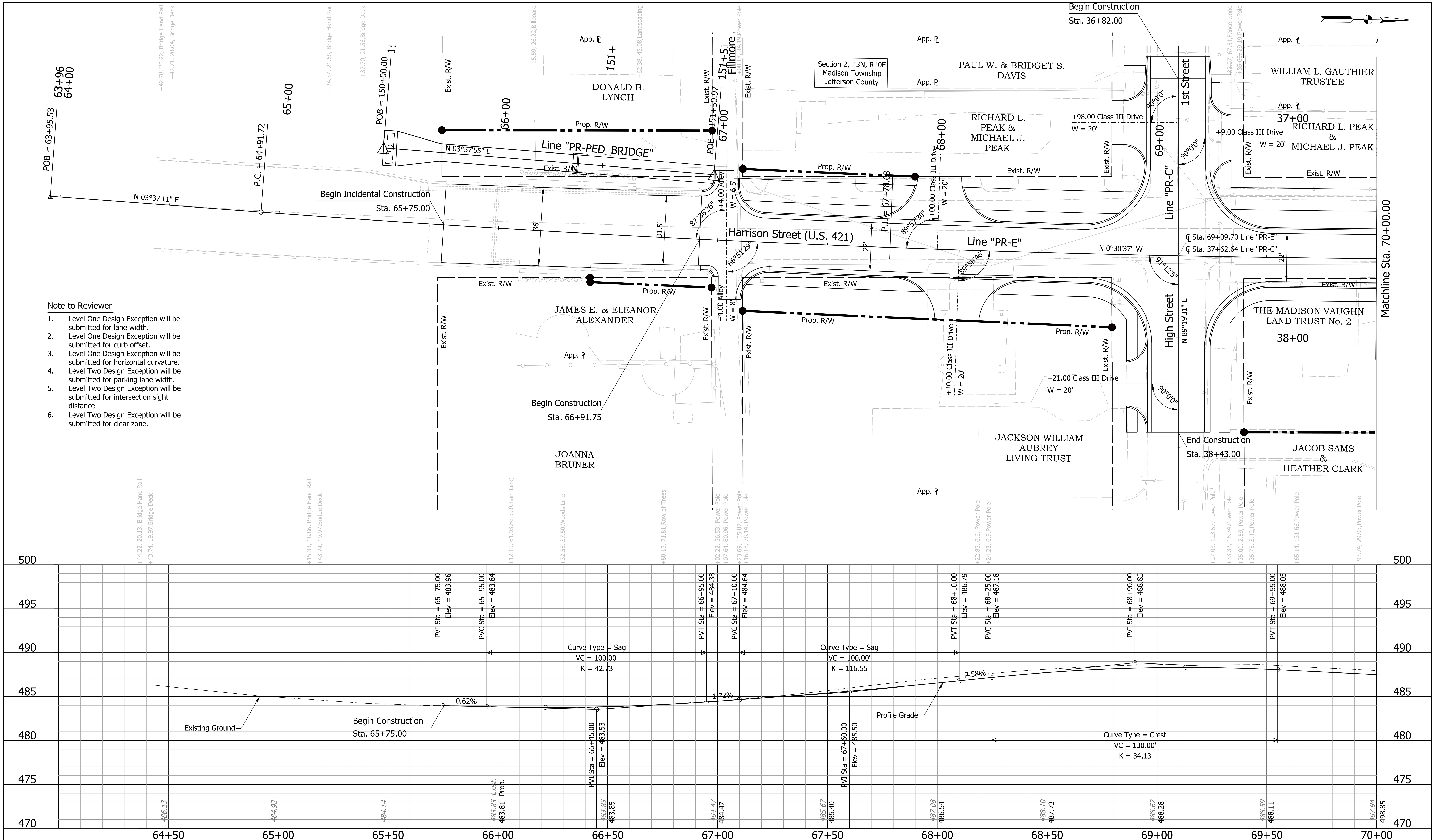

Note to Reviewer

1. Level One Design Exception will be submitted for lane width.
2. Level One Design Exception will be submitted for curb offset.
3. Level One Design Exception will be submitted for horizontal curvature.
4. Level Two Design Exception will be submitted for parking lane width.
5. Level Two Design Exception will be submitted for intersection sight distance.
6. Level Two Design Exception will be submitted for clear zone.

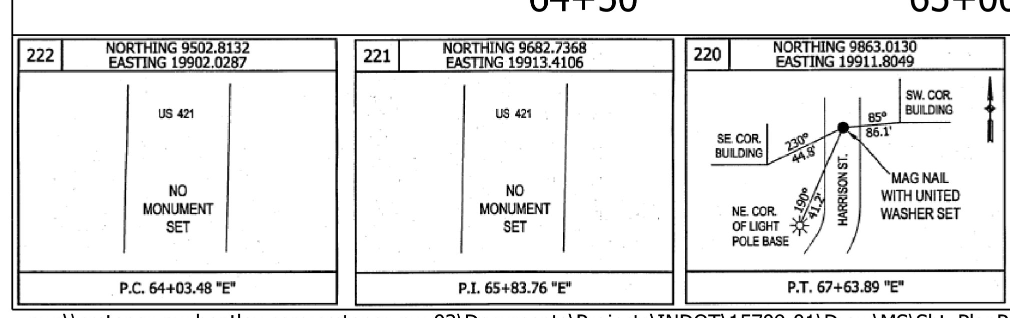

NOT FOR CONSTRUCTION

RECOMMENDED FOR APPROVAL	DESIGN ENGINEER		1/19/2017 DATE
DESIGNED: GTB 1/19/2017		DRAWN: RY 1/19/2017	
CHECKED: AJB 1/19/2017		CHECKED: AJB 1/19/2017	

INDIANA
DEPARTMENT OF TRANSPORTATION

PLAN & PROFILE
HARRISON STREET LINE "PR-E"

HORIZONTAL SCALE	BRIDGE FILE
1" = 20'	N/A
VERTICAL SCALE	DESIGNATION
1" = 10'	1400918
SURVEY BOOK	SHEETS
	12 of 51
CONTRACT	PROJECT
R-37592	1400918

pw:\\cmtengr-pw.bentley.com:cmtengr-pw-02\Documents\Projects\INDOT\15709-01\Draw\MS\Sht_PlanProfile_20_01.dgn

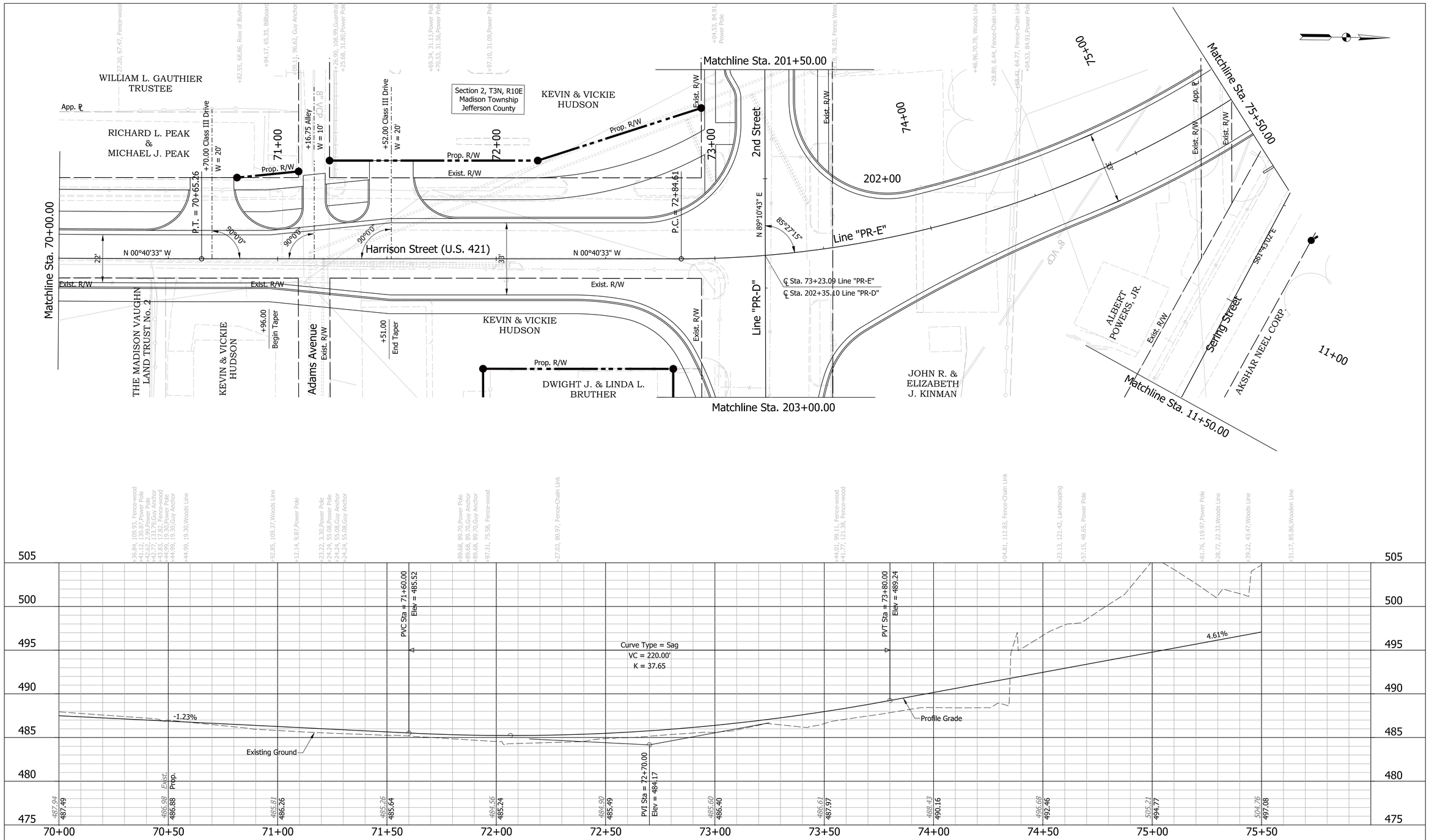

NOT FOR CONSTRUCTION

RECOMMENDED FOR APPROVAL		1/19/2017	
	DESIGN ENGINEER		DATE
DESIGNED: GTB	1/19/2017	DRAWN: RY	1/19/2017
CHECKED: AJB	1/19/2017	CHECKED: AJB	1/19/2017

INDIANA
DEPARTMENT OF TRANSPORTATION

PLAN & PROFILE
HARRISON STREET LINE "PR-E"

HORIZONTAL SCALE	BRIDGE FILE
1" = 20'	N/A
VERTICAL SCALE	DESIGNATION
1" = 10'	1400918
SURVEY BOOK	SHEETS
	13 of 51
CONTRACT	PROJECT
R-37592	1400918

pw:\\cmtengr-pw.bentley.com:cmtengr-pw-02\Documents\Projects\INDOT\15709-01\Draw\MS\Sht_PlanProfile_20_02.dgn

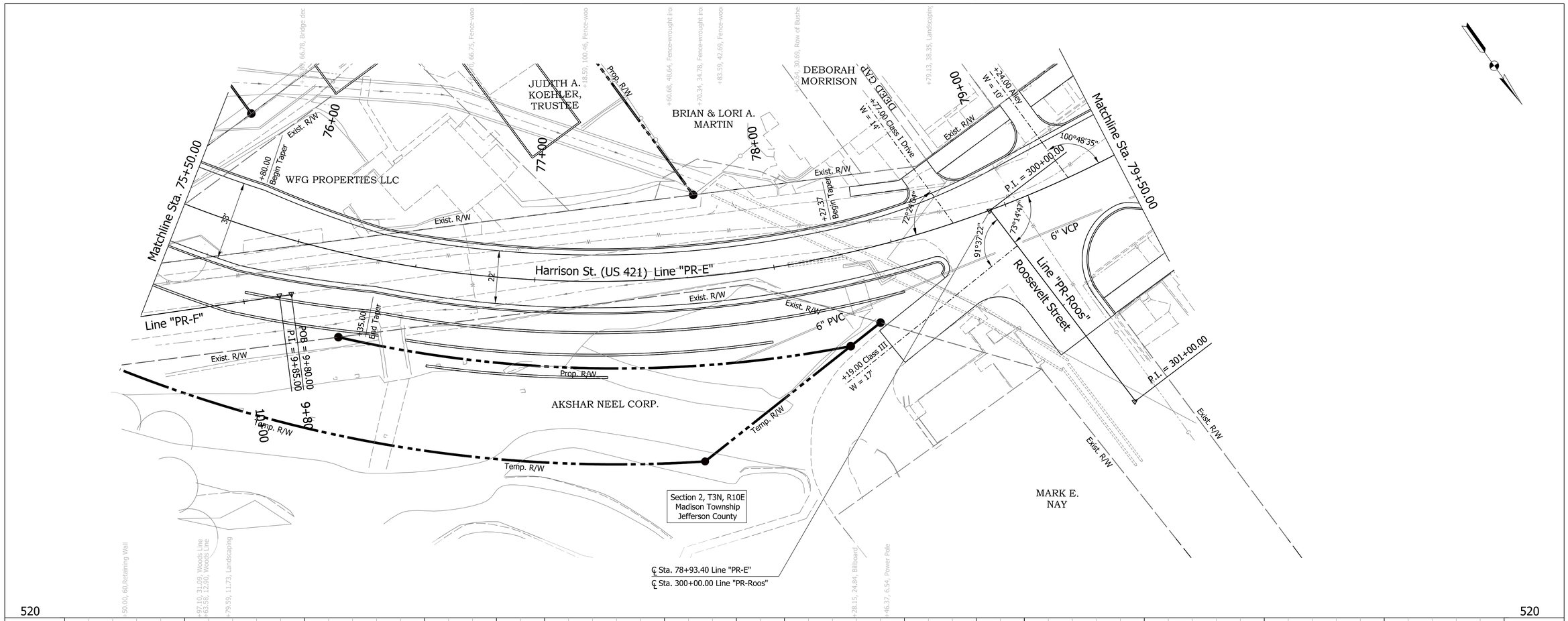

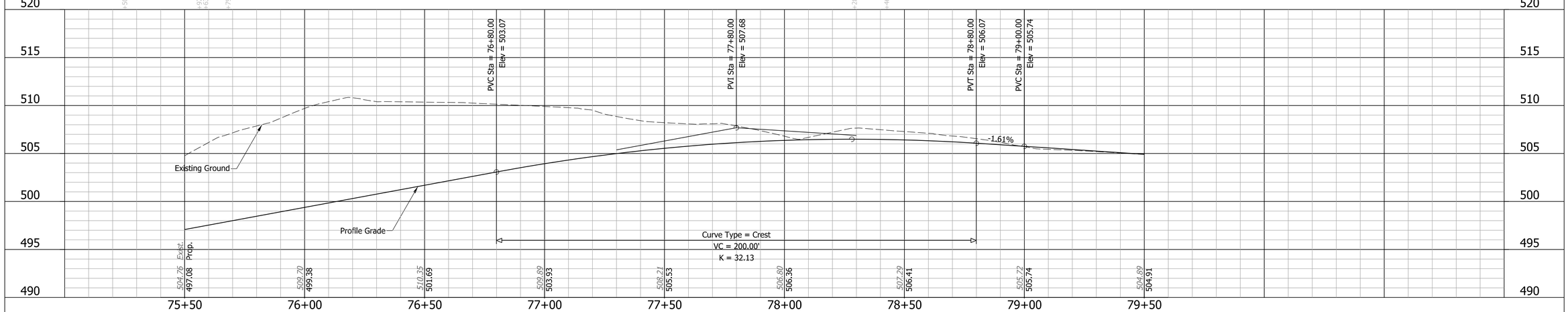

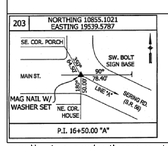

NOT FOR CONSTRUCTION

RECOMMENDED FOR APPROVAL — DESIGN ENGINEER — 1/19/2017 DATE

DESIGNED: GTB 1/19/2017 DRAWN: RY 1/19/2017

CHECKED: AJB 1/19/2017 CHECKED: AJB 1/19/2017

INDIANA
DEPARTMENT OF TRANSPORTATION

PLAN & PROFILE
HARRISON STREET LINE "PR-E"

HORIZONTAL SCALE	BRIDGE FILE
1" = 20'	N/A
VERTICAL SCALE	DESIGNATION
1" = 10'	1400918
SURVEY BOOK	SHEETS
	14 of 51
CONTRACT	PROJECT
R-37592	1400918

pw:\\cmtengr-pw.bentley.com:cmtengr-pw-02\Documents\Projects\INDOT\15709-01\Draw\MS\Sht_PlanProfile_20_03.dgn

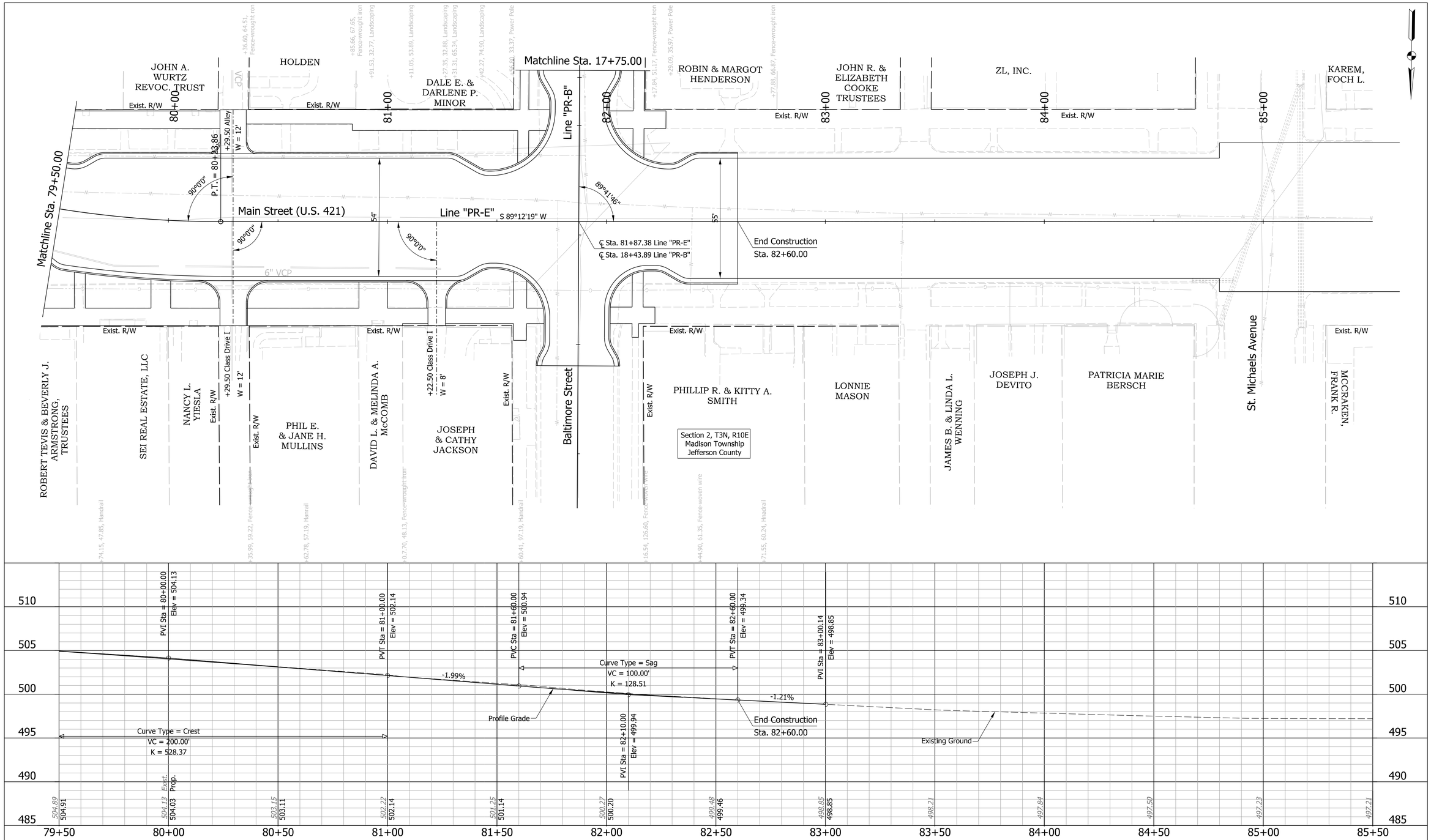

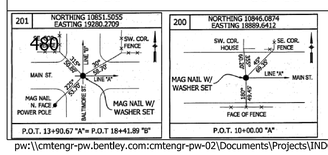

NOT FOR CONSTRUCTION

RECOMMENDED FOR APPROVAL _____ 1/19/2017
DESIGN ENGINEER DATE

DESIGNED: GTB 1/19/2017 DRAWN: RY 1/19/2017
CHECKED: AJB 1/19/2017 CHECKED: AJB 1/19/2017

INDIANA DEPARTMENT OF TRANSPORTATION

PLAN & PROFILE
MAIN STREET LINE "PR-E"

HORIZONTAL SCALE	BRIDGE FILE
1" = 20'	N/A
VERTICAL SCALE	DESIGNATION
1" = 10'	1400918
SURVEY BOOK	SHEETS
	15 of 51
CONTRACT	PROJECT
R-37592	1400918

pw:\\cmtengr-pw.bentley.com:cmtengr-pw-02\Documents\Projects\INDOT\15709-01\Draw\MS\Sht_PlanProfile_20_04.dgn

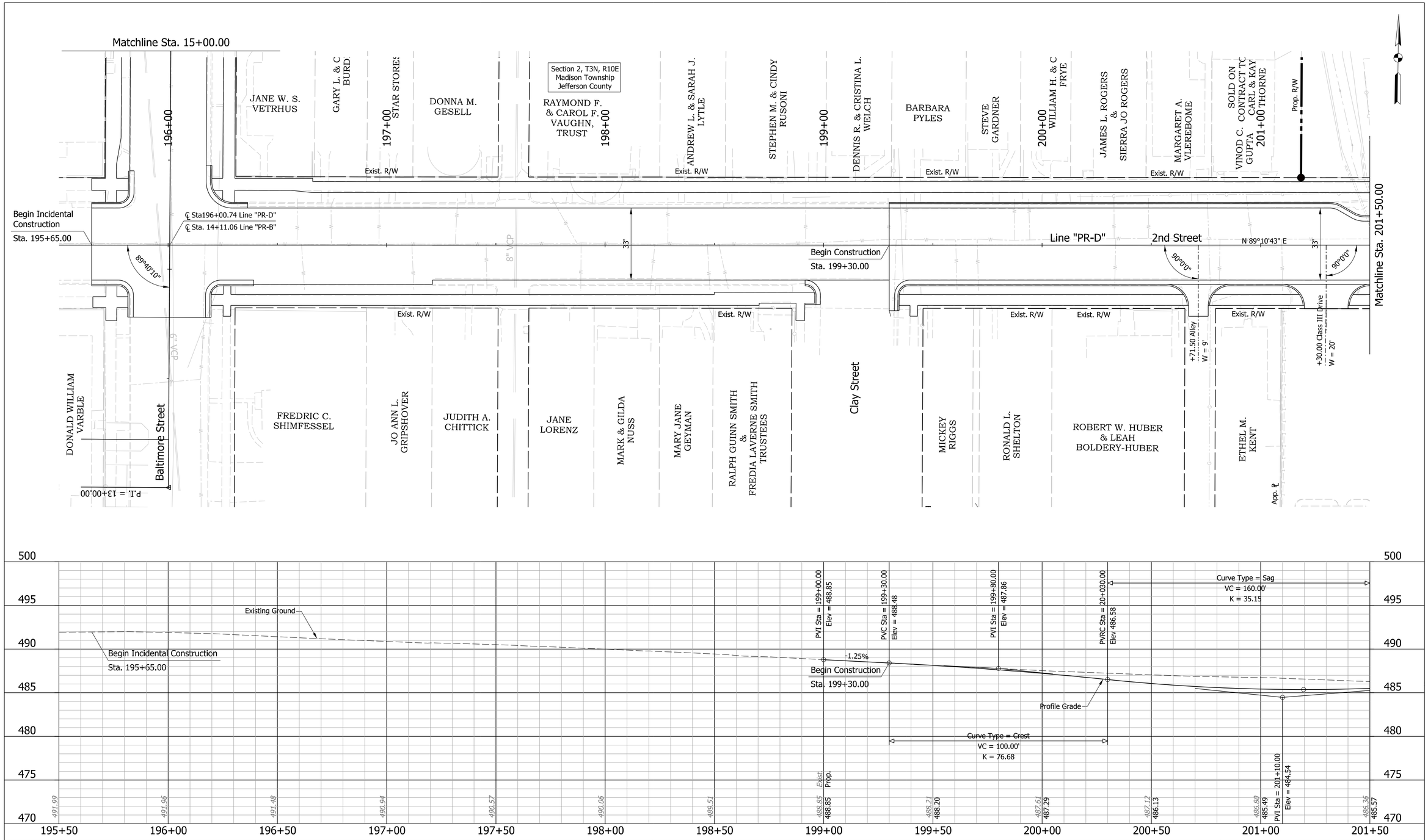

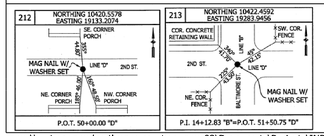

NOT FOR CONSTRUCTION

RECOMMENDED FOR APPROVAL		1/19/2017	
	DESIGN ENGINEER		DATE
DESIGNED: GTB	1/19/2017	DRAWN: RY	1/19/2017
CHECKED: AJB	1/19/2017	CHECKED: AJB	1/19/2017

INDIANA
DEPARTMENT OF TRANSPORTATION

PLAN & PROFILE
2ND STREET LINE "PR-D"

HORIZONTAL SCALE	BRIDGE FILE
1" = 20'	N/A
VERTICAL SCALE	DESIGNATION
1" = 10'	1400918
SURVEY BOOK	SHEETS
	16 of 51
CONTRACT	PROJECT
R-37592	1400918

pw:\\cmtengr-pw.bentley.com:cmtengr-pw-02\Documents\Projects\INDOT\15709-01\Draw\MS\Sht_PlanProfile_20_05.dgn

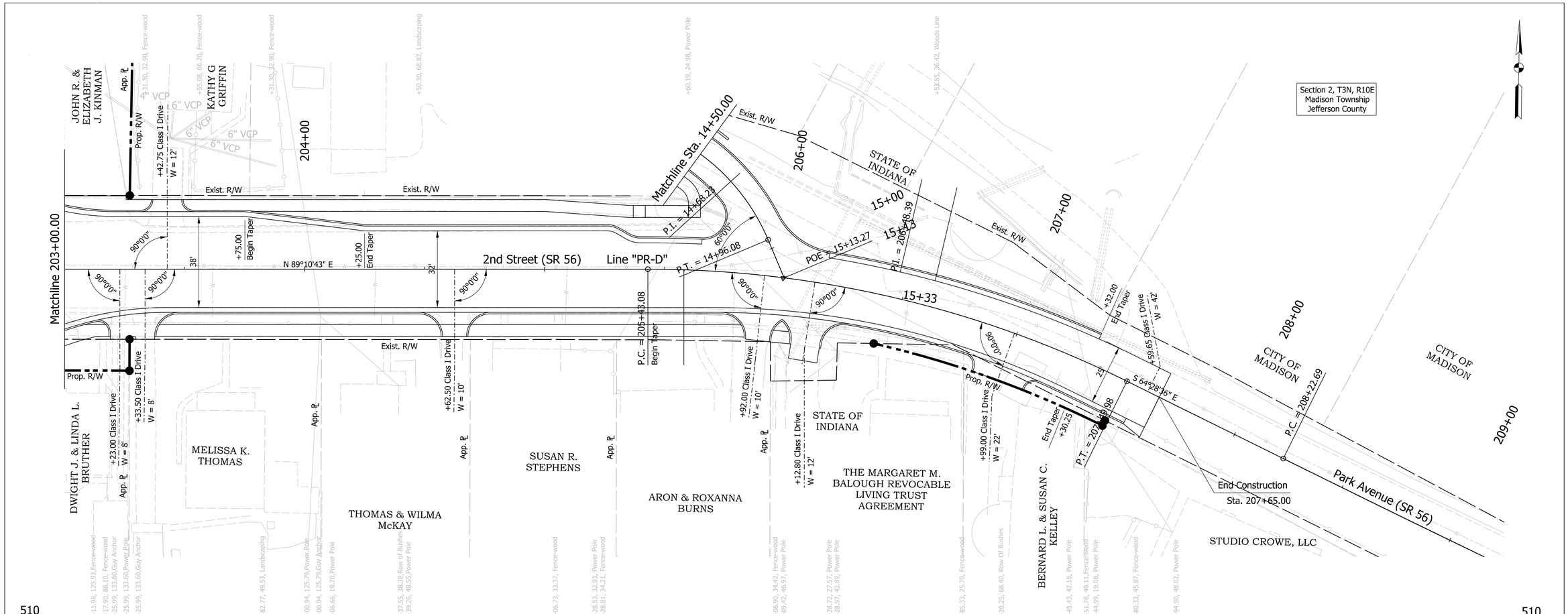

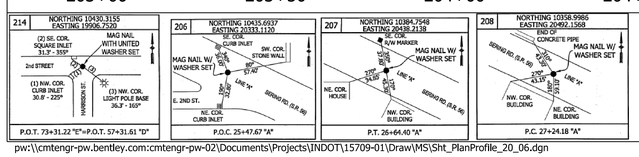

NOT FOR CONSTRUCTION

RECOMMENDED FOR APPROVAL	DESIGN ENGINEER	1/19/2017	DATE
DESIGNED: GTB	1/19/2017	DRAWN: RY	1/19/2017
CHECKED: AJB	1/19/2017	CHECKED: AJB	1/19/2017

INDIANA
DEPARTMENT OF TRANSPORTATION

PLAN & PROFILE
2ND STREET LINE "PR-D"

HORIZONTAL SCALE	BRIDGE FILE
1" = 20'	N/A
VERTICAL SCALE	DESIGNATION
1" = 10'	1400918
SURVEY BOOK	SHEETS
	17 of 51
CONTRACT	PROJECT
R-37592	1400918

pw:\\cmtengr-pw.bentley.com:cmtengr-pw-02\Documents\Projects\INDOT\15709-01\Draw\MS\Sht_PlanProfile_20_06.dgn

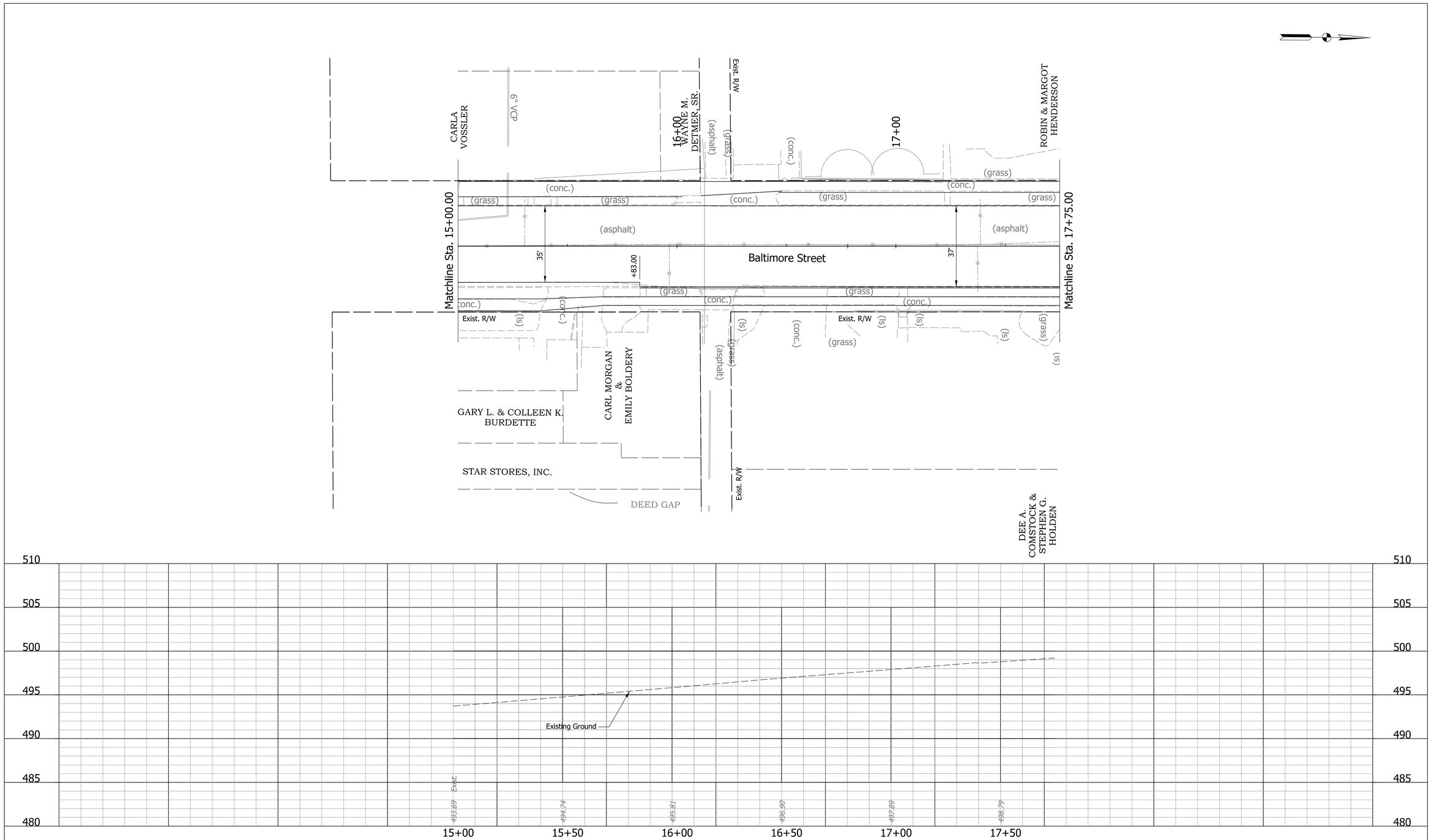

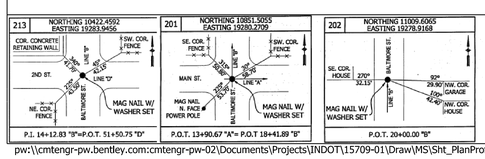

NOT FOR CONSTRUCTION

RECOMMENDED FOR APPROVAL	DESIGN ENGINEER	1/19/2017 DATE	INDIANA DEPARTMENT OF TRANSPORTATION	HORIZONTAL SCALE: 1" = 20' / BRIDGE FILE: N/A / VERTICAL SCALE: 1" = 10' / DESIGNATION: 1400918
DESIGNED: GTB 1/19/2017	DRAWN: RY 1/19/2017		PLAN & PROFILE BALTIMORE STREET	SURVEY BOOK / SHEETS: 18 of 51
CHECKED: AJB 1/19/2017	CHECKED: AJB 1/19/2017			CONTRACT: R-37592 / PROJECT: 1400918

pw:\\cmtengr-pw.bentley.com:cmtengr-pw-02\Documents\Projects\INDOT\15709-01\Draw\MS\Sht_PlanProfile_20_07.dgn

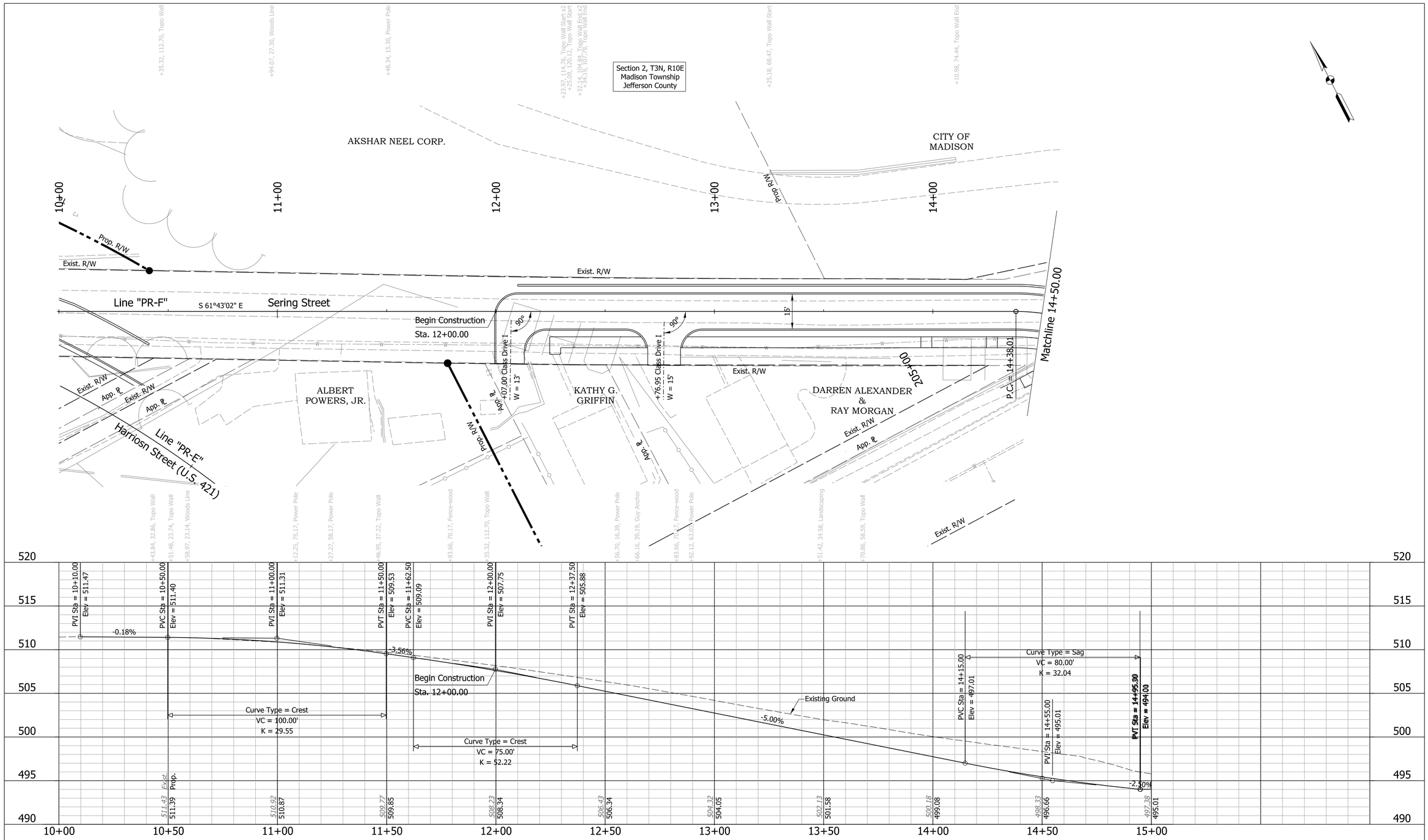

NOT FOR CONSTRUCTION

RECOMMENDED FOR APPROVAL — DESIGN ENGINEER — 1/19/2017 DATE

DESIGNED: GTB 1/19/2017 DRAWN: RY 1/19/2017

CHECKED: AJB 1/19/2017 CHECKED: AJB 1/19/2017

INDIANA
DEPARTMENT OF TRANSPORTATION

PLAN & PROFILE
SERING STREET LINE "PR-F"

HORIZONTAL SCALE	BRIDGE FILE
1" = 20'	N/A
VERTICAL SCALE	DESIGNATION
1" = 10'	1400918
SURVEY BOOK	SHEETS
	19 of 51
CONTRACT	PROJECT
R-37592	1400918

pw:\\cmtengr-pw.bentley.com:cmtengr-pw-02\Documents\Projects\INDOT\15709-01\Draw\MS\Sht_PlanProfile_20_08.dgn

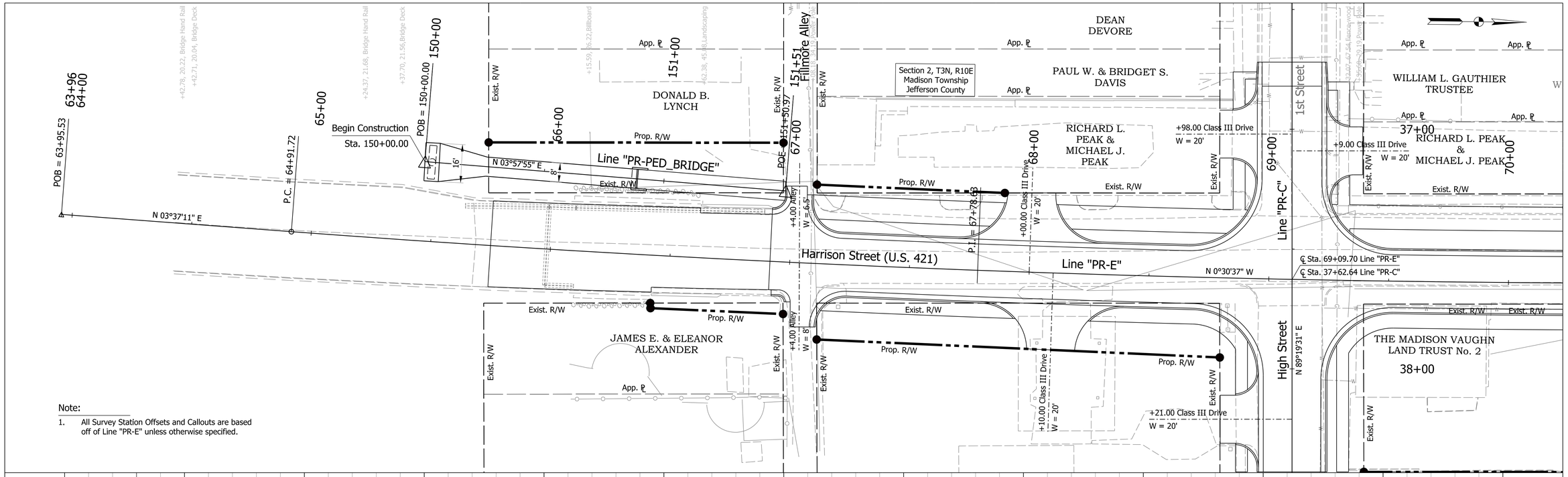

Note:

1. All Survey Station Offsets and Callouts are based off of Line "PR-E" unless otherwise specified.

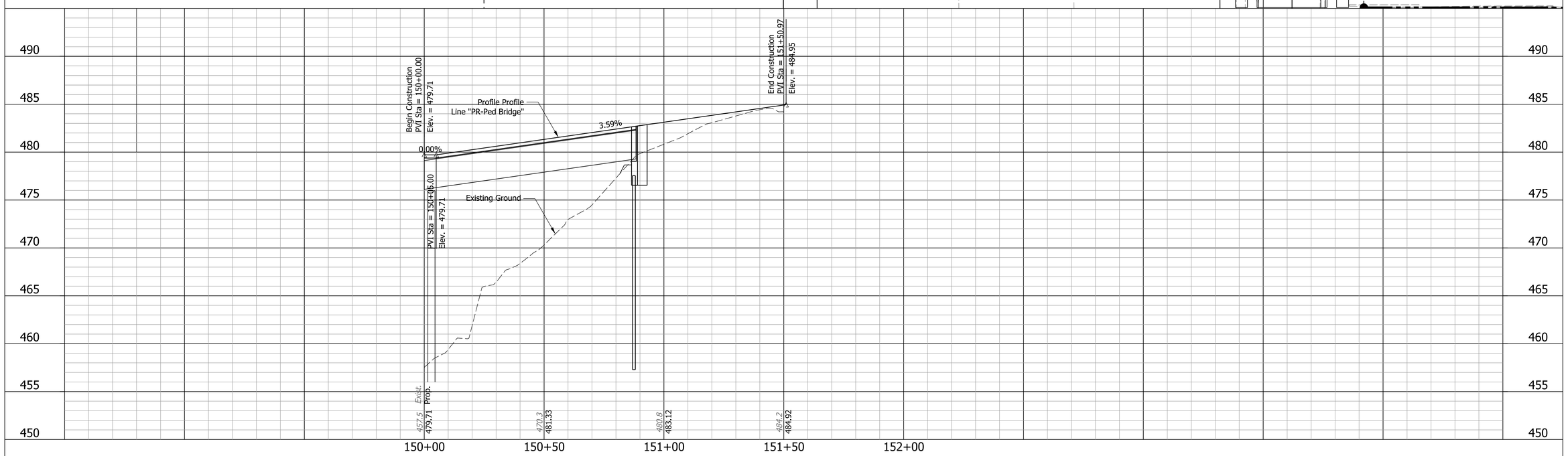

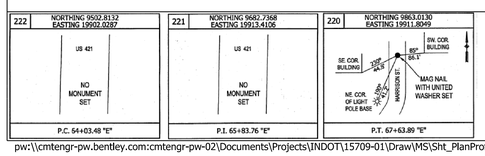

NOT FOR CONSTRUCTION

RECOMMENDED FOR APPROVAL _____ 1/19/2017
DESIGN ENGINEER DATE

DESIGNED: MJL 1/19/2017 DRAWN: MJL 1/19/2017
CHECKED: AJB 1/19/2017 CHECKED: AJB 1/19/2017

INDIANA
DEPARTMENT OF TRANSPORTATION

PLAN & PROFILE
PEDESTRIAN BRIDGE LINE "PR-PED-BRIDGE"

HORIZONTAL SCALE	BRIDGE FILE
1" = 20'	N/A
VERTICAL SCALE	DESIGNATION
1" = 10'	1400918
SURVEY BOOK	SHEETS
	20 of 51
CONTRACT	PROJECT
R-37592	1400918

pw:\\cmtengr-pw.bentley.com:cmtengr-pw-02\Documents\Projects\INDOT\15709-01\Draw\MS\Sht_PlanProfile_20_09.dgn

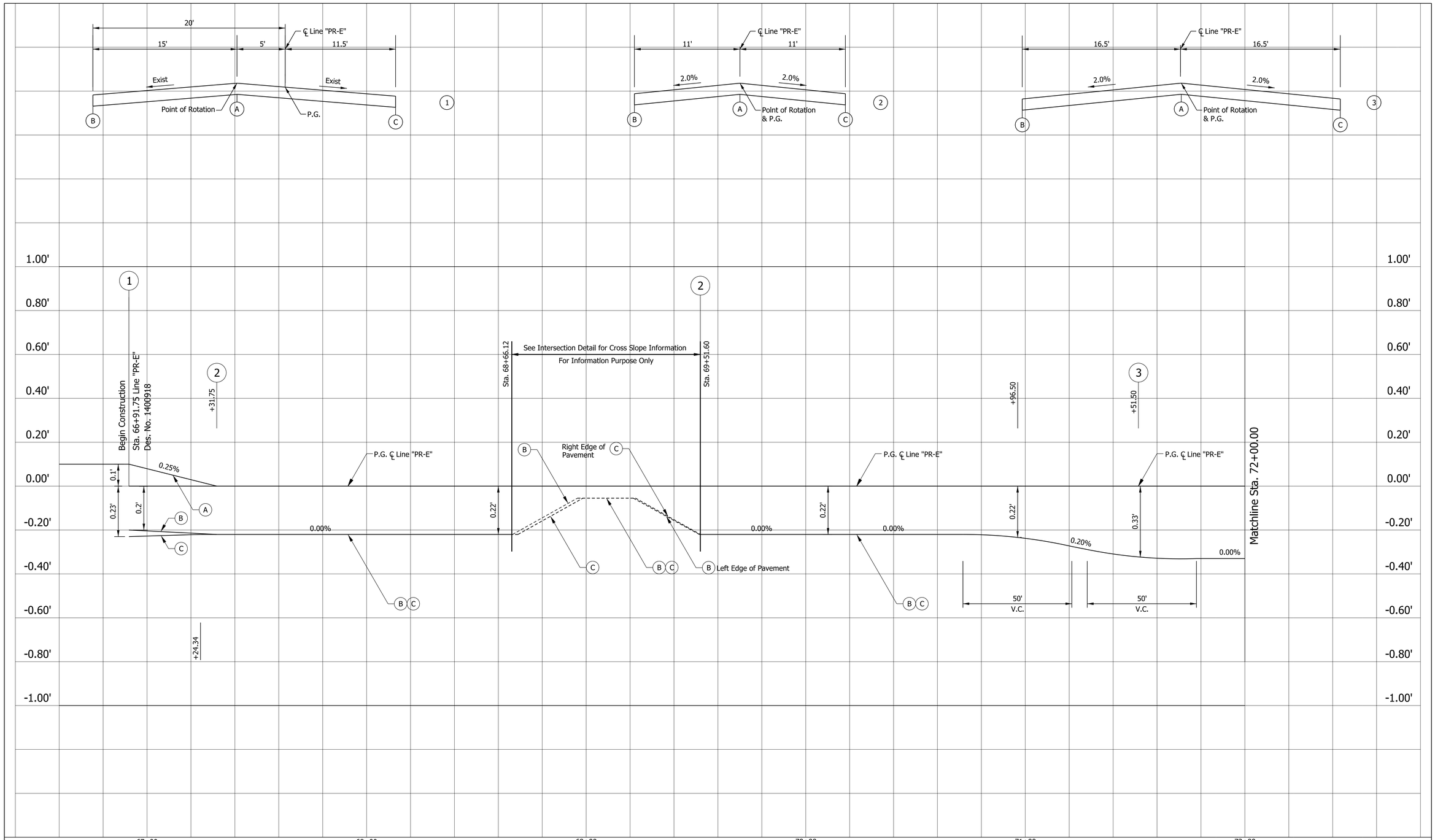

NOT FOR CONSTRUCTION

RECOMMENDED FOR APPROVAL _____ 1/19/2017
DESIGN ENGINEER DATE

DESIGNED: GTB 1/19/2017 DRAWN: RY 1/19/2017
CHECKED: AJB 1/19/2017 CHECKED: AJB 1/19/2017

INDIANA
DEPARTMENT OF TRANSPORTATION

SUPERELEVATION DETAIL
LINE "PR-E"

HORIZONTAL SCALE	BRIDGE FILE
1" = 20'	N/A
VERTICAL SCALE	DESIGNATION
1" = 100'	1400918
SURVEY BOOK	SHEETS
N/A	21 of 51
CONTRACT	PROJECT
R-37592	1400918

pw:\\cmtengr-pw.bentley.com:cmtengr-pw-02\Documents\Projects\INDOT\15709-01\Draw\MS\Sht_Super_US 421.dgn

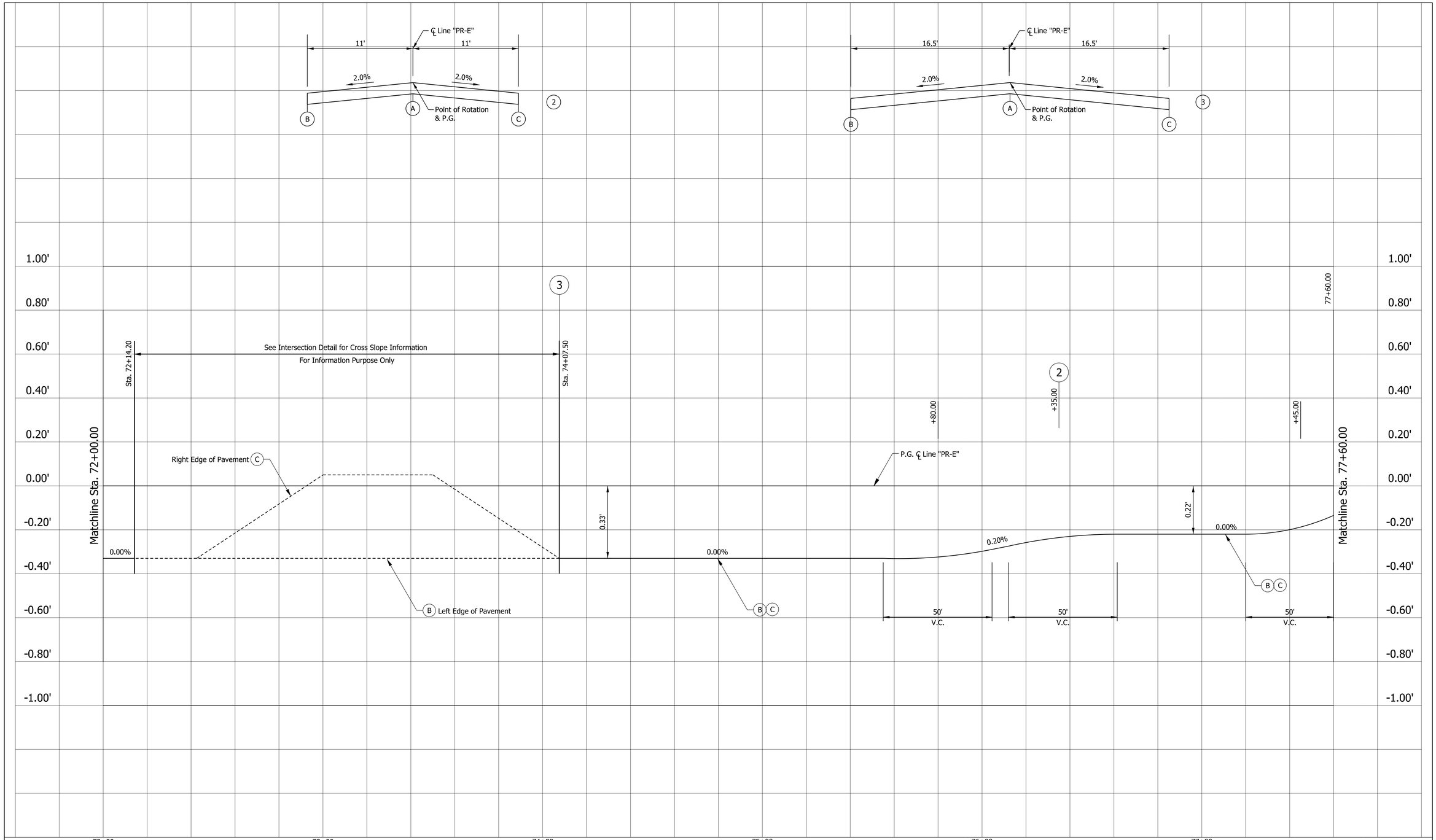

NOT FOR CONSTRUCTION

RECOMMENDED FOR APPROVAL _____ 1/19/2017
DESIGN ENGINEER DATE

DESIGNED: GTB 1/19/2017 DRAWN: RY 1/19/2017
CHECKED: AJB 1/19/2017 CHECKED: AJB 1/19/2017

INDIANA
DEPARTMENT OF TRANSPORTATION

SUPERELEVATION DETAIL
LINE "PR-E"

HORIZONTAL SCALE	BRIDGE FILE
1" = 20'	N/A
VERTICAL SCALE	DESIGNATION
1" = 100'	1400918
SURVEY BOOK	SHEETS
N/A	22 of 51
CONTRACT	PROJECT
R-37592	1400918

pw:\\cmtengr-pw.bentley.com:cmtengr-pw-02\Documents\Projects\INDOT\15709-01\Draw\MS\Sht_Super_US 421.dgn

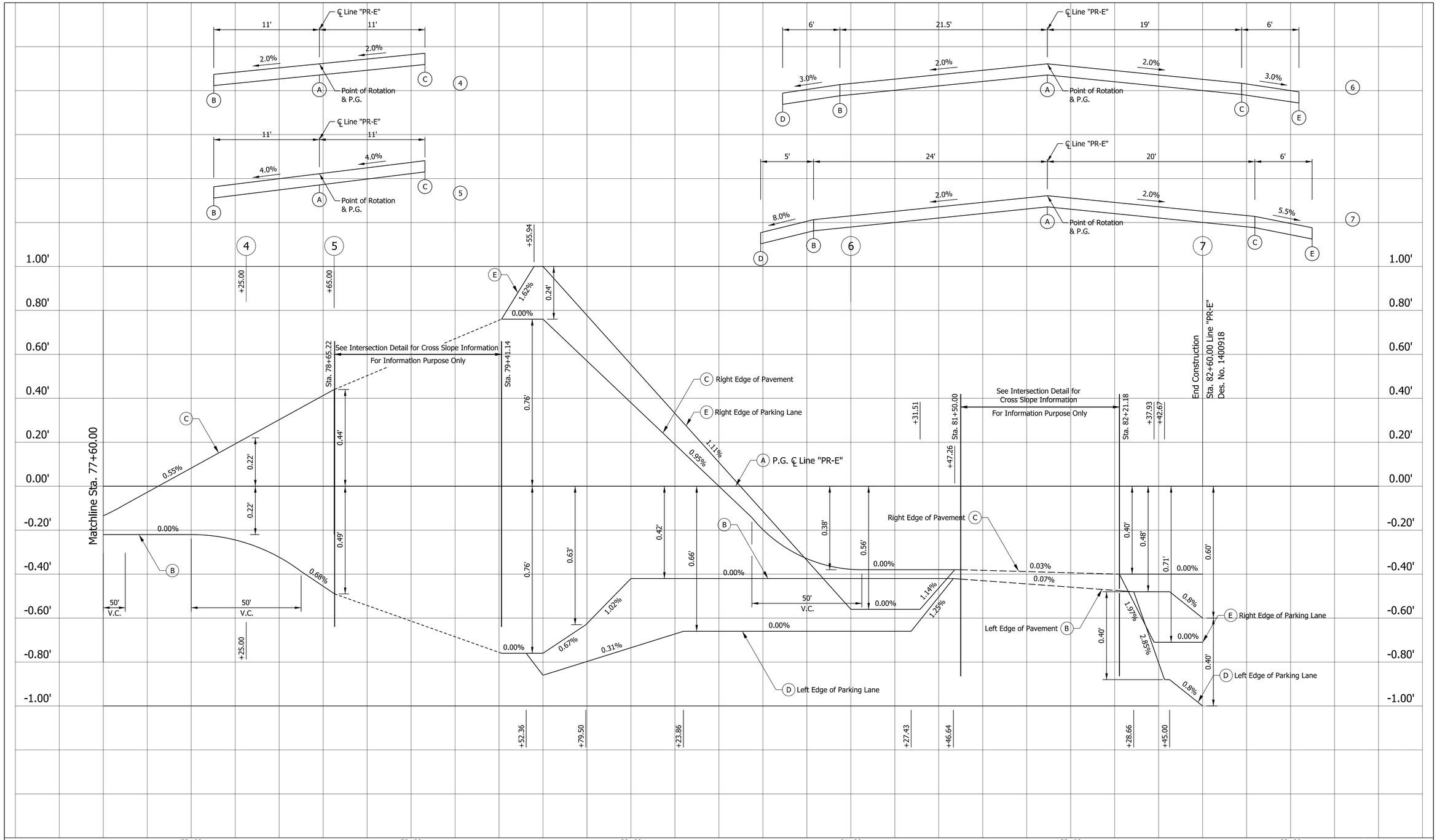

NOT FOR CONSTRUCTION

RECOMMENDED FOR APPROVAL _____ 1/19/2017
DESIGN ENGINEER DATE

DESIGNED: GTB 1/19/2017 DRAWN: RY 1/19/2017
CHECKED: AJB 1/19/2017 CHECKED: AJB 1/19/2017

INDIANA
DEPARTMENT OF TRANSPORTATION

SUPERELEVATION DETAIL
LINE "PR-E"

HORIZONTAL SCALE	BRIDGE FILE
1" = 20'	N/A
VERTICAL SCALE	DESIGNATION
1" = 100'	1400918
SURVEY BOOK	SHEETS
N/A	23 of 51
CONTRACT	PROJECT
R-37592	1400918

pw:\\cmtengr-pw.bentley.com:cmtengr-pw-02\Documents\Projects\INDOT\15709-01\Draw\MS\Sht_Super_US 421.dgn

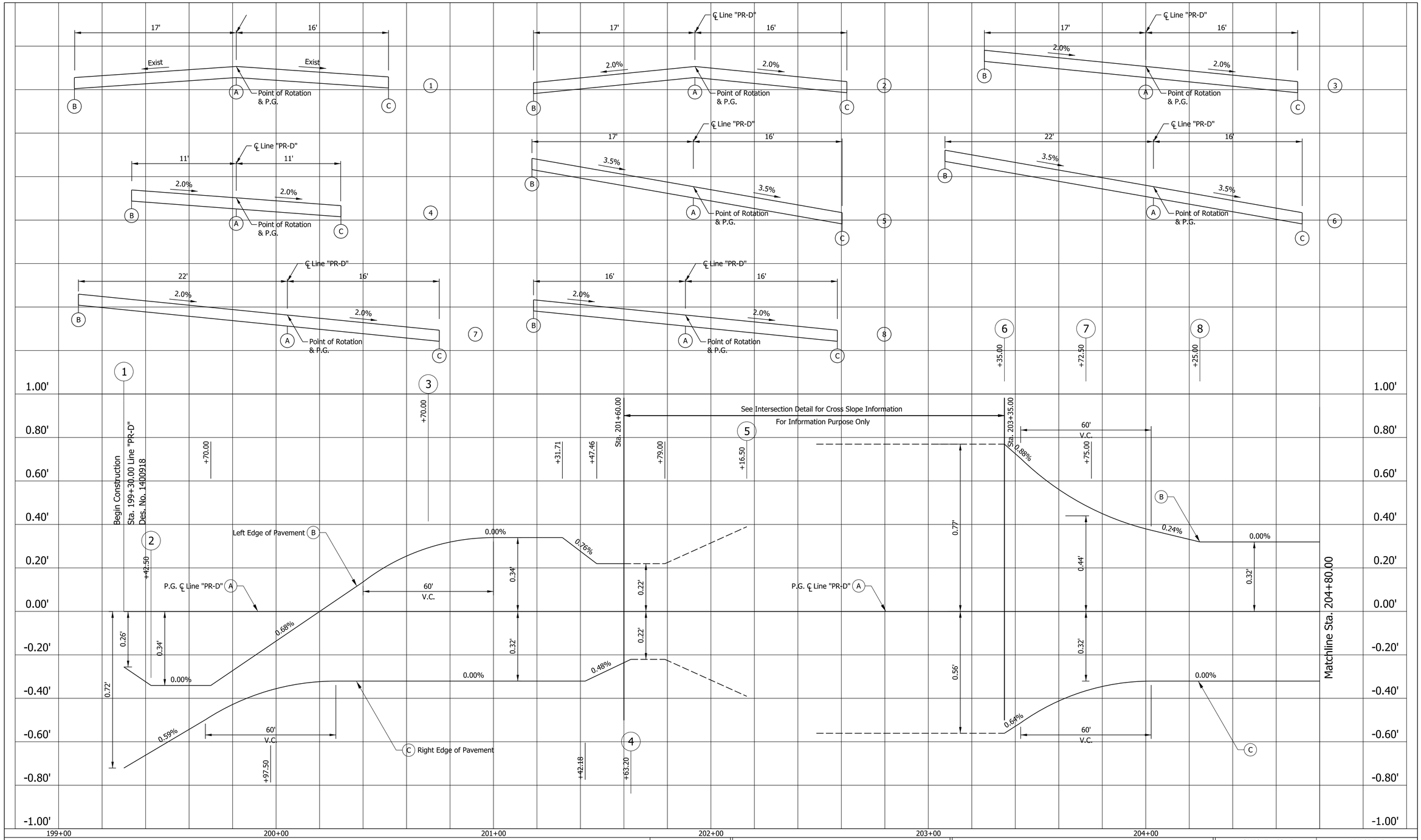

NOT FOR CONSTRUCTION

RECOMMENDED FOR APPROVAL _____ 1/19/2017
DESIGN ENGINEER DATE

DESIGNED: GTB 1/19/2017 DRAWN: RY 1/19/2017
CHECKED: AJB 1/19/2017 CHECKED: AJB 1/19/2017

INDIANA
DEPARTMENT OF TRANSPORTATION

SUPERELEVATION DETAIL
LINE "PR-D"

HORIZONTAL SCALE	BRIDGE FILE
1" = 20'	N/A
VERTICAL SCALE	DESIGNATION
1" = 100'	1400918
SURVEY BOOK	SHEETS
N/A	24 of 51
CONTRACT	PROJECT
R-37592	1400918

pw:\\cmtengr-pw.bentley.com:cmtengr-pw-02\Documents\Projects\INDOT\15709-01\Draw\MS\Sht_Super_2nd St.dgn

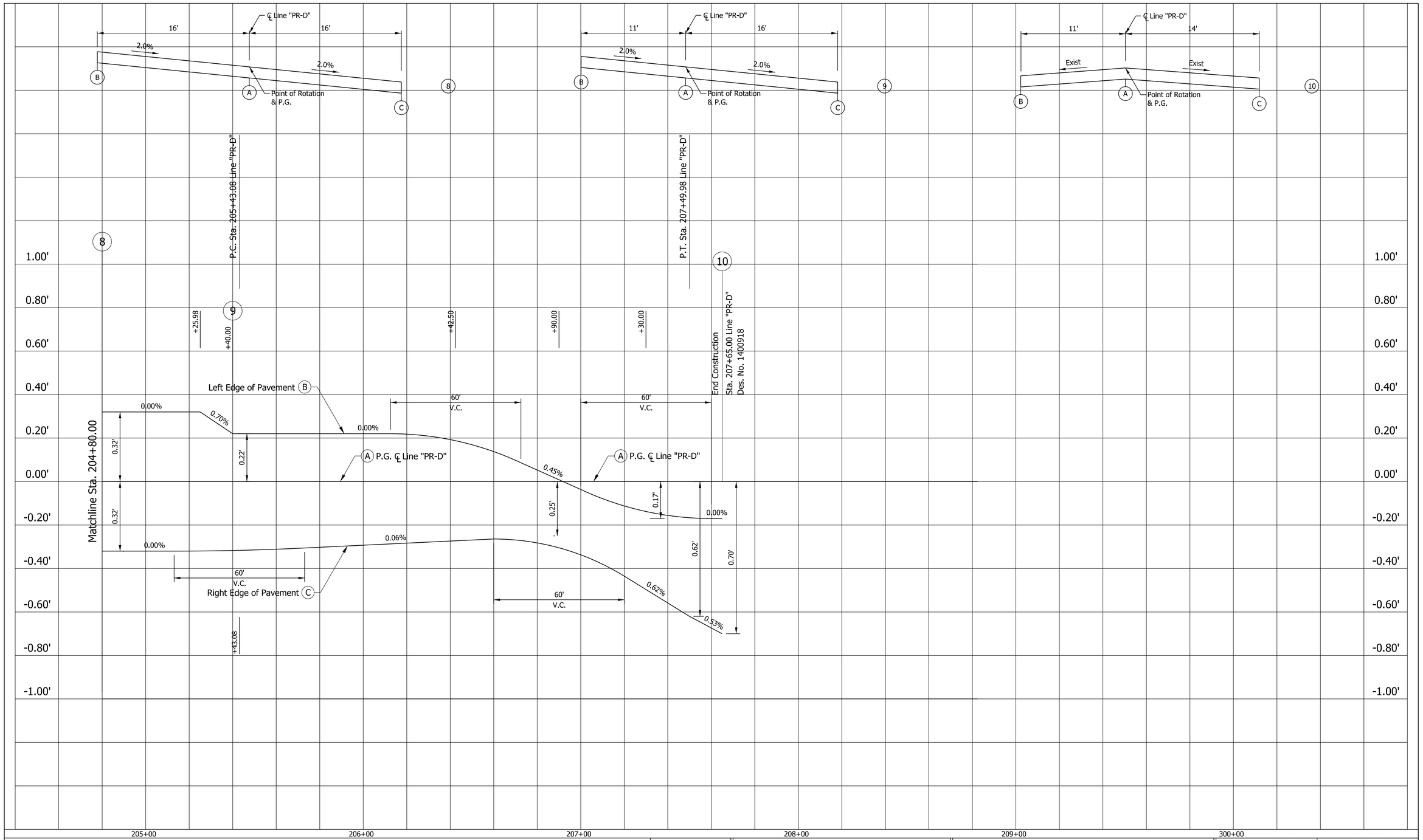

NOT FOR CONSTRUCTION

RECOMMENDED FOR APPROVAL _____ 1/19/2017
DESIGN ENGINEER DATE

DESIGNED: GTB 1/19/2017 DRAWN: RY 1/19/2017

CHECKED: AJB 1/19/2017 CHECKED: AJB 1/19/2017

INDIANA
DEPARTMENT OF TRANSPORTATION

SUPERELEVATION DETAIL
LINE "PR-D"

HORIZONTAL SCALE	BRIDGE FILE
1" = 20'	N/A
VERTICAL SCALE	DESIGNATION
1" = 100'	1400918
SURVEY BOOK	SHEETS
N/A	25 of 51
CONTRACT	PROJECT
R-37592	1400918

pw:\\cmtengr-pw.bentley.com:cmtengr-pw-02\Documents\Projects\INDOT\15709-01\Draw\MS\Sht_Super_2nd St.dgn

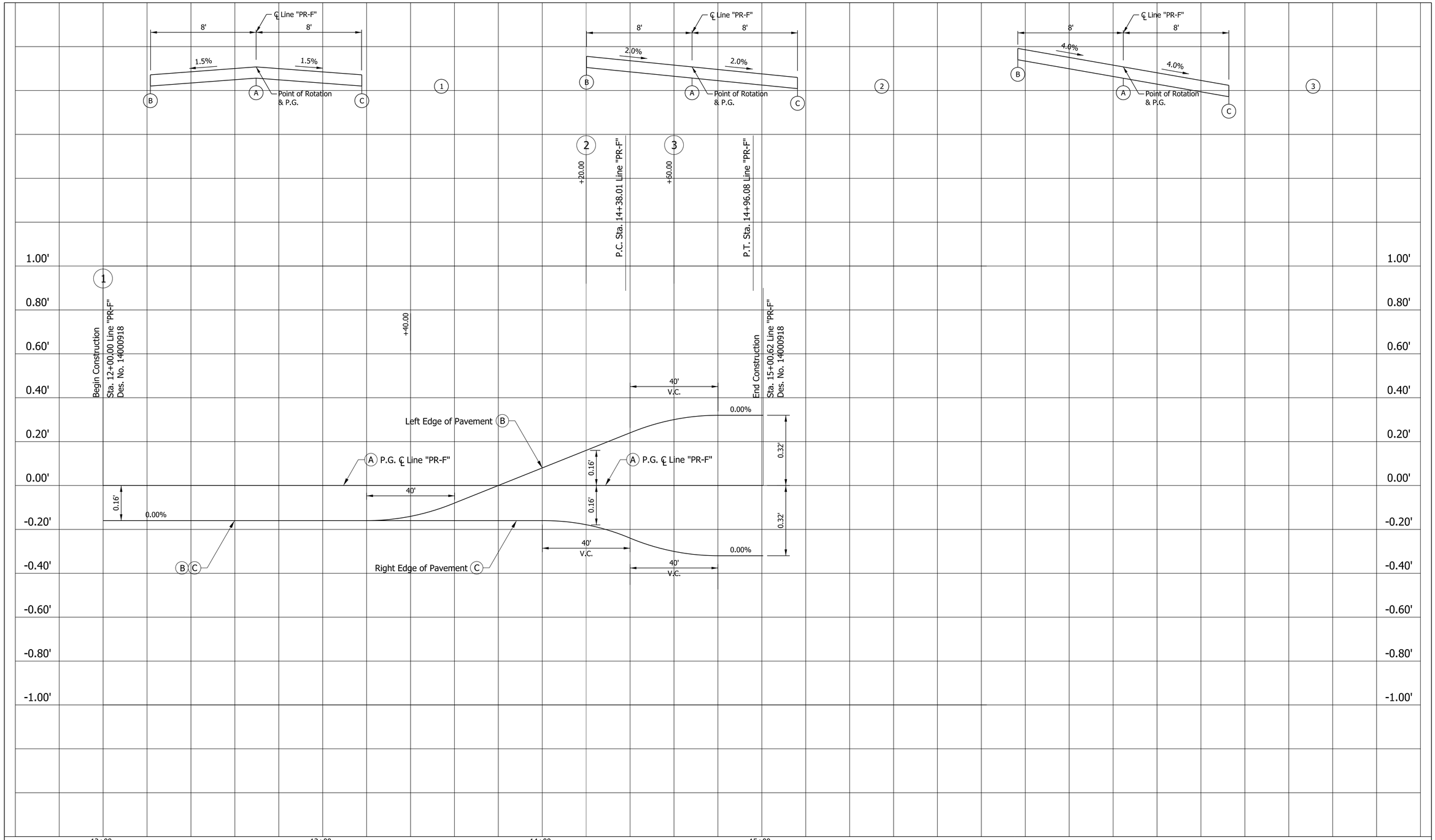

NOT FOR CONSTRUCTION

RECOMMENDED FOR APPROVAL _____ 1/19/2017
DESIGN ENGINEER DATE

DESIGNED: GTB 1/19/2017 DRAWN: RY 1/19/2017
CHECKED: AJB 1/19/2017 CHECKED: AJB 1/19/2017

INDIANA
DEPARTMENT OF TRANSPORTATION

SUPERELEVATION DETAIL
LINE "PR-F"

HORIZONTAL SCALE	BRIDGE FILE
1" = 20'	N/A
VERTICAL SCALE	DESIGNATION
1" = 100'	1400918
SURVEY BOOK	SHEETS
N/A	26 of 51
CONTRACT	PROJECT
R-37592	1400918

pw:\\cmtengr-pw.bentley.com:cmtengr-pw-02\Documents\Projects\INDOT\15709-01\Draw\MS\Sht_Super_Sering St.dgn

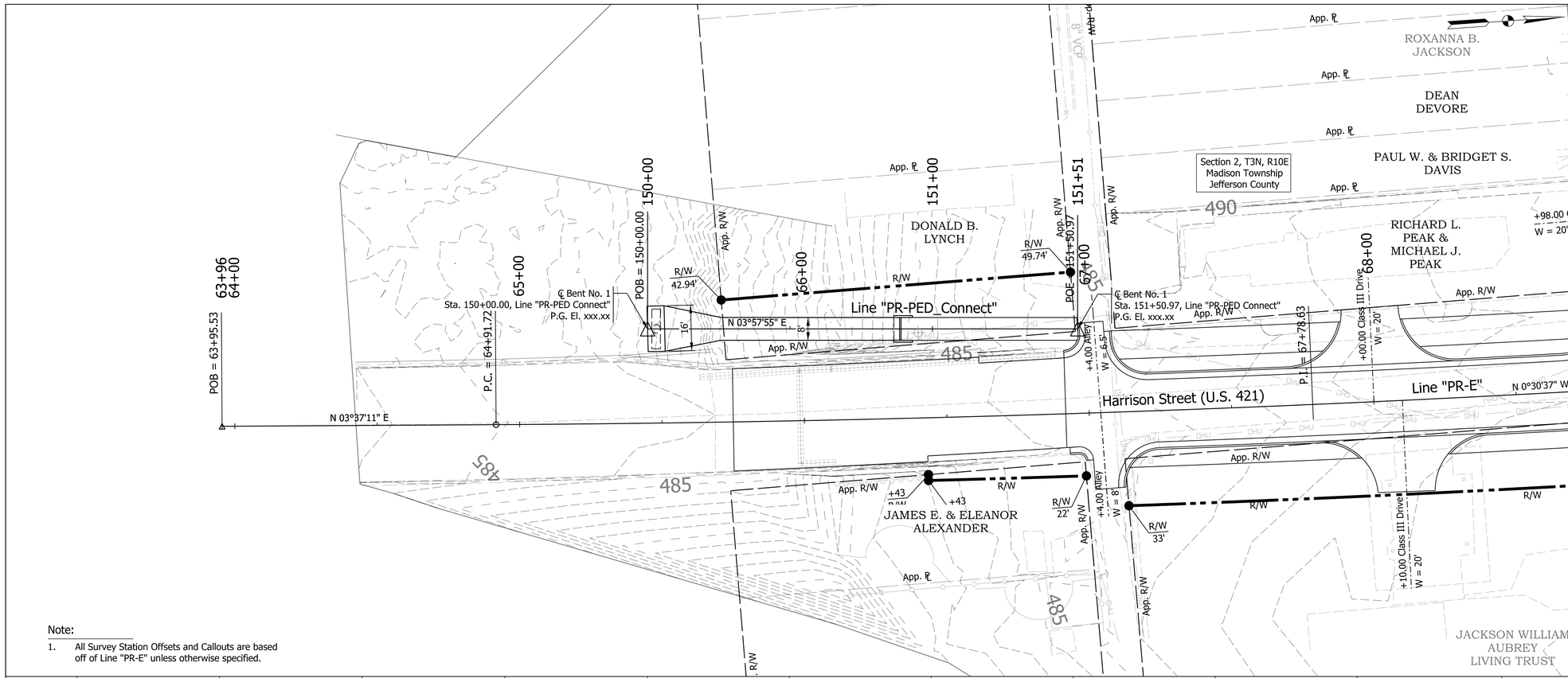

Note:

1. All Survey Station Offsets and Callouts are based off of Line "PR-E" unless otherwise specified.

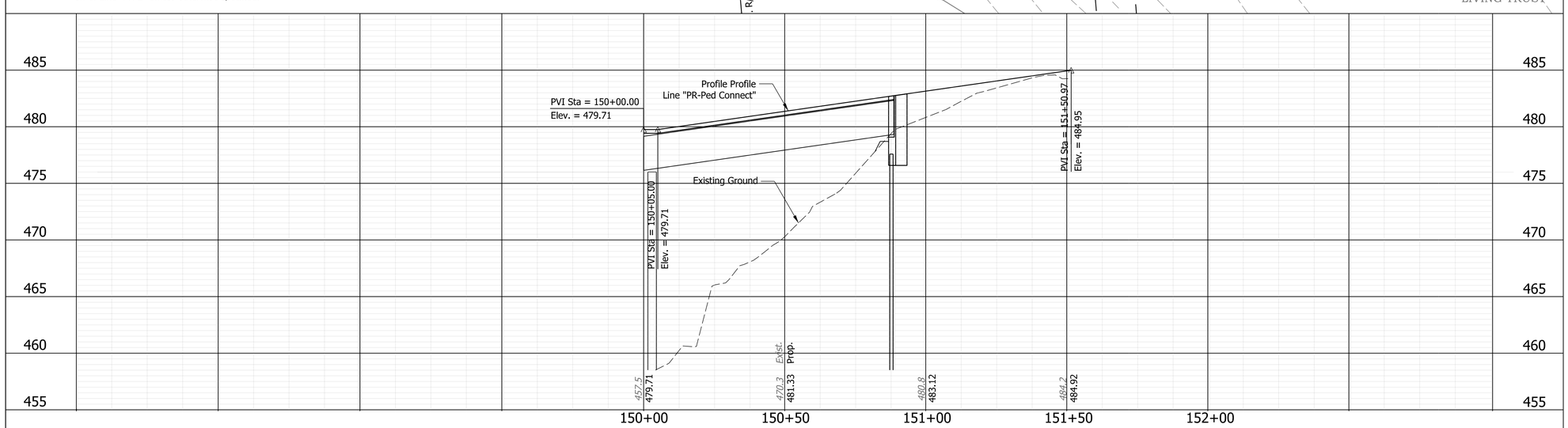

EXISTING STRUCTURE

The existing Pedestrian Structure No. 4 is part of the U.S. 421 Steel Truss Bridge Reconstruction (421-39-6003) over the Ohio River. The existing pedestrian bridge at the Indiana Approach has multiple spans from pier 7B to pier A has a span of 94'-4⅝" on 2-W36x150. The deck width is 7'-0" with a minimum of a 6" depth. The deck turns and has an equivalent span that runs from Pier A to Pier 7B. Pier A is a a wall pier built on 14" diameter Secant Piles. See Contract IB-33023 for additional details on Structure No. 4.

EARTHWORK SUMMARY

Fill X%	X cys
Common Excavation	X cys
Suplus Foundation Excavation (X%)	X cys
Borrow	X cys
Excavation unclassfied	X cys
Benching (Estimated)	X cys
	X cys

SINGLE SPAN STEEL W-BEAM BRIDGE
1 SPAN: 84'-6"; VARIES 8'-0" TO 16'-0" CLEAR WIDTH; SKEW: NONE
US-421 PEDESTRIAN CONNECTION OVER OHIO RIVER
JEFFERSON COUNTY

DATE	REVISION

NOT FOR CONSTRUCTION

RECOMMENDED FOR APPROVAL $ENG_SIGNATURE$ 8/22/2017
DESIGN ENGINEER DATE

DESIGNED: MJL 8/22/2017 DRAWN: MJL 8/22/2017
CHECKED: AJB 8/22/2017 CHECKED: AJB 8/22/2017

INDIANA
DEPARTMENT OF TRANSPORTATION

LAYOUT
PEDESTRIAN CONNECTION LINE "PR-PED-CONNECT"

SCALE	BRIDGE FILE
1" = 20'	TBD
	DESIGNATION
1" = 10'	TBD
SURVEY BOOK	SHEETS
	$LAYOUT$ of 7
CONTRACT	PROJECT
R-37592	1400918

pw:\\cmtengr-pw.bentley.com:cmt-projects\Documents\Projects\INDOT\15709-01\Draw\MS\Sht_Layout_20_01.dgn

Note to Reviewer

Geotechnical Investigation has not yet been completed. Assumed foundation types based on limited existing information.

As-built plans for existing structures (bridge and retaining walls) have been requested, but not yet aquired for this location.

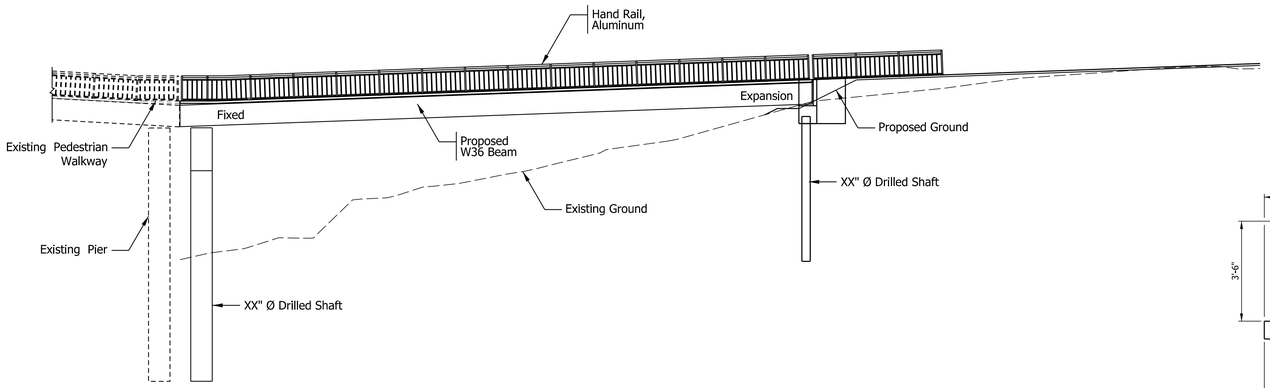

PIER NO. 1

END BENT NO. 2

ELEVATION

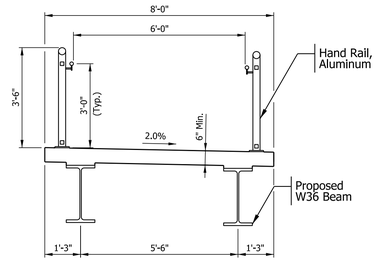

TYPICAL SECTION

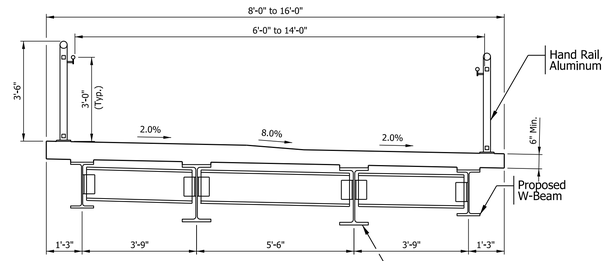

TYPICAL SECTION

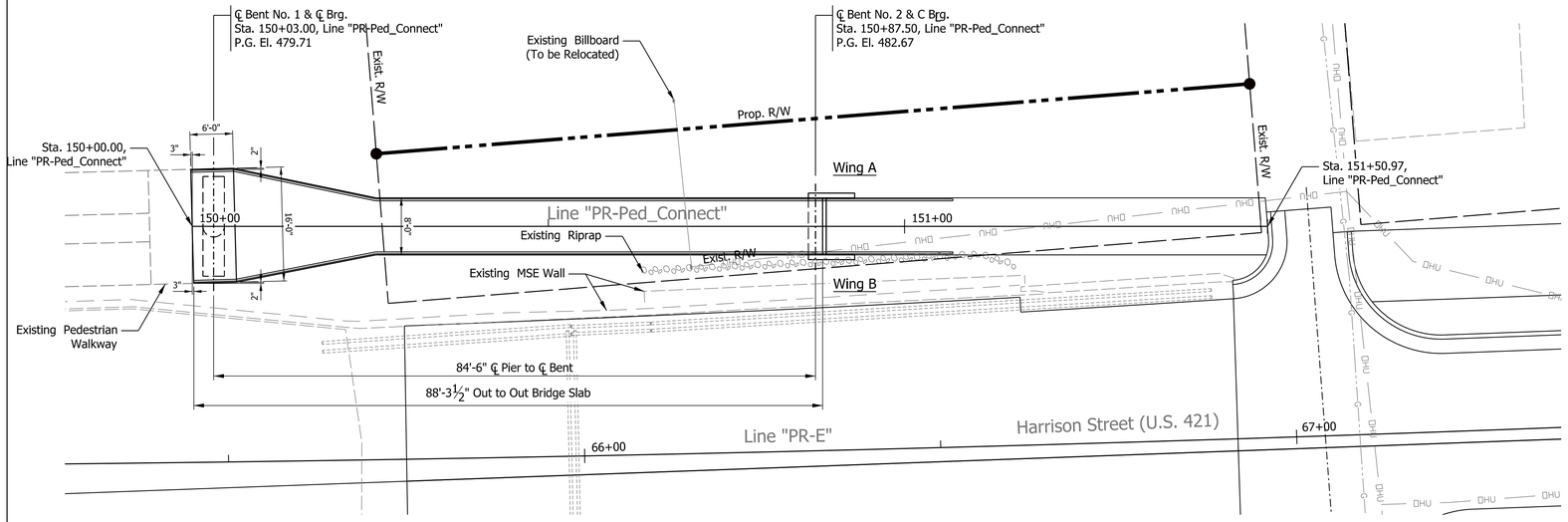

PLAN

GENERAL NOTES

Reinforcing steel covering shall be 2½" in Top and 1" min. in bottom of floor slab, 3" in footings except bottom steel which shall be 4", and 2" in all other parts, unless noted.

All New Reinforcement Shall be Epoxy Coated.

Surface Seal Shall be Applied to the Approach Slabs, All Exposed Surfaces of Concrete Railings and Railing Transitions, Deck Copings, and All Exposed Ends of the Substructure Units.

Contractor to Verify Plan Dimensions versus Field Conditions.

DESIGN DATA

Designed for 90 psf pedestrian loading, in accordance with AASHTO LRFD Guide Specification for the Design of Pedestrian Bridges 2009 with 2015 Interims. This loading shall be patterned to produce the maximum load effects. Dynamic load allowance is not required for this load.

DEAD LOAD

Actual weight of the structure shall be taken into consideration. Plus 25 plf per Railing and 15 psf (Non-Composite) for Permanent Metal Deck Forms.

FLOOR SLAB

Designed with a minimum structural depth of 6".

DESIGN STRESSES

CONCRETE

Class "A" Concrete	f'c = 3,500 p.s.i.
Class "B" Concrete	f'c = 3,000 p.s.i.
Class "C" Concrete	f'c = 4,000 p.s.i.

REINFORCING STEEL

Grade 60	fy = 60,000 p.s.i.

WIND LOAD

Designed for 100 mph horizontal wind loading in accordance with LRFD 3.8.1.

SEISMIC DESIGN DATA

Seismic Performance Zone	Zone 1
Acceleration Coefficient	0.076
Seismic Soil Profile Type	Class D

NOTES:

1. All information described from Line "PR-Ped_Connect". For Additional information see Roadway Planss Des. No. 1400918.

SINGLE SPAN STEEL W-BEAM BRIDGE
1 SPAN: 84'-6"
VARIES 8'-0" TO 16'-0" CLEAR WIDTH; SKEW: NONE
US-421 PEDESTRIAN CONNECTION OVER OHIO RIVER
JEFFERSON COUNTY

DATE	REVISION

NOT FOR CONSTRUCTION

RECOMMENDED FOR APPROVAL — DESIGN ENGINEER — 8/22/2017 DATE

DESIGNED: MJL 8/22/2017 DRAWN: MJL 8/22/2017

CHECKED: AJB 8/22/2017 CHECKED: AJB 8/22/2017

INDIANA
DEPARTMENT OF TRANSPORTATION

GENERAL PLAN AND DETAILS
PEDESTRIAN CONNECTION

SCALE	BRIDGE FILE
1" = 10'	TBD
	DESIGNATION
	TBD
SURVEY BOOK	SHEETS
	6 of 7
CONTRACT	PROJECT
R-37592	1400918

pw:\\cmtengr-pw.bentley.com:cmt-projects\Documents\Projects\INDOT\15709-01\Draw\MS\Sht_GeneralPlan_01.dgn

Appendix B

Early Coordination

UNITED Consulting

ENGINEERING
ENVIRONMENTAL
INSPECTION
LAND SURVEYING
LAND ACQUISITION
PLANNING
WATER & WASTEWATER
SINCE 1965

OFFICERS
William E. Hall, PE
Dave Richter, PE, PLS
Steven W. Jones
Christopher R. Pope, PE
B. Keith Bryant, PE
Michael Rowe, PE

PROFESSIONAL STAFF
Andrew T. Wolka, PE
Devin L. Stettler, AICP
Adam C. Post, PE
Michael S. Oliphant, AICP
E. Rachelle Pemberton, PE
Timothy J. Coomes, PLS
Jon E. Clodfelter, PE
Steven R. Passey, PE
Brian J. Pierson, PE
Christopher L. Hammond, PE
Paul D. Glotzbach, PE
Brian S. Frederick, PE
Jay N. Ridens, PE
Christopher J. Dyer, PE
Matthew R. Lee, PE
William R. Curtis, PE
Jeromy A. Richardson, PE
Heather E. Kilgour, PE
Adam J. Greulich, PLS
Caleb C. Ross, PE
Matthew A. Taylor, PE
Dann C. Barrett, PE
Scott G. Minnich, PE
John R. Stocks, PE
Jim R. Lesh, PE
Nicholas J. Kocher, PE
Jennifer L. Hart, PE
Jeffrey R. Andrews, PE
Kelton S. Cunningham, PE
Jonathan M. Korff, PE
Braun S. Rodgers, PE
Jordan C. Baker, PE
Chris J. Andrzejewski, PE
Greg J. Broz, PE
John E. Harstad, PE

1625 N. Post Road, Indianapolis, IN 46219 (317) 895-2585 www.ucindy.com

Sample Early Coordination Letter

May 2, 2017

Ms. Christie Stanifer, Environmental Coordinator
Indiana Department of Natural Resources
Divsion of Water
Indiana Government Center, Room W264
Indianapolis, Indiana 46204-2641

RE: Early Coordination Letter
Project 421
Des. No.: 1400918
Madison, Indiana

Dear Ms. Stanifer,

The Indiana Department of Transportation (INDOT), Federal Highway Administration (FHWA), and the City of Madison desire to improve the approach roadway to the Milton-Madison Bridge over the Ohio River. The proposed project is located within Jefferson County, Indiana in the City of Madison and located through a portion of the National Historic Landmark Madison Historic District and National Register of Historic Places (NRHP) Historic District. The project is located in Section 2, Township 3 North, Range 10 East in Madison Township, Jefferson County.

Our firm is part of a project team retained by the Indiana Department of Transportation to complete the required preliminary engineering activities for this project. Please refer to the attached location maps and ground level photographs to assist with your review.

As part of early coordination for this project, you are asked to review the enclosed information and prepare a written evaluation of the potential project impacts upon resources within your jurisdiction. Please utilize the referenced designation number (Des. No.: 1400918) in your reply. We ask that you reply within 30 days of receipt of the Early Coordination Letter. If no reply is received, it will be noted in the environmental document that your agency has no comment on the proposed project. Please address your agency's response to Michael S. Oliphant, Environmental Specialist, United Consulting, 1625 North Post Road, Indianapolis, Indiana 46219 or email mikeo@ucindy.com.

Introduction and Project History:

The Milton-Madison Bridge Project was a joint effort between the Kentucky Transportation Cabinet (KYTC), INDOT, and the FHWA to replace the aging US 421 Bridge over the Ohio River between Milton, Kentucky and Madison, Indiana. The original US 421 Bridge over the Ohio River contained a steel truss structure with a total length of 3,181 feet 6 3/8 inches. It had two 10-foot travel lanes and no shoulders. The original US 421 Bridge over the Ohio River was built in 1929 between Trimble County, Kentucky and Jefferson County, Indiana.

In the mid-1990s, KYTC undertook a planning study and environmental overview to replace the US 421 Bridge over the Ohio River. This study identified a number of potential river crossing alternatives and assembled information on the environmental constraints existing at that time. However, no final alternative was selected for implementation. Therefore, the existing structure was rehabilitated in 1997 to extend the life by 10 to 20 years.

In 2009, a Fracture Critical Inspection (a visual inspection of key bridge members) was undertaken as part of the KYTC's routine bridge maintenance activities, which identified numerous bridge elements that were in poor or serious conditions. Due to the severity of the inspection findings, the Milton-Madison Bridge was replaced in 2014. Due to the accelerated need to address the structural integrity of the bridge, INDOT, through coordination with Section 106 Consulting Parties committed to enhance mobility and access to the US 421 Bridge during a subsequent roadway project.

Purpose and Need:

Need for the US 421 Road Construction Project

The need for improvement is caused by poor geometry of the existing roadway alignment which has led to vehicle congestion. This congestion has led to a history of vehicle collisions throughout the corridor. Additionally, the poor geometry has led to increased noise and air pollution. The City of Madison, INDOT, and FHWA previously committed to improving the approach roadway conditions as part of the Milton-Madison Bridge Rehabilitation. Overall, the need for improvement is caused by poor geometry, traffic congestion, air pollution, noise pollution, poor pedestrian connectivity, and perpetual impacts to historic properties. The following paragraphs further describe each aspect of the project need.

1) Enhance Mobility and Safety in the Corridor

With approximately 11,500 vehicles per day, including 920 local commercial trucks, using US 421 over the Ohio River between Milton, Kentucky and Madison, Indiana, the efficiency of the corridor is essential to not only the citizens of Madison but the traveling public of Indiana. Additionally, the importance of this route is highlighted by the next nearest river crossings being located at Markland Dam over 26 miles upstream and I-65 in Louisville over 46 miles downstream. Commuters in both Jefferson County, Indiana and Trimble County, Kentucky travel the US 421 Bridge over the Ohio River to access jobs, emergency and health care facilities, and commerce across the river, represented by 70% of the trips crossing the US 421 Bridge over the Ohio River having origins or destinations within Madison.

Currently, vehicles traveling along US 421 must negotiate a series of 90-degree turns in a residential neighborhood intermingled with commercial businesses on a segment of highway north of the US 421 Bridge. Many of the properties adjacent to the existing roadway are contributing to the National Historic Landmark (NHL) District within the City of Madison. Traveling northbound, vehicles must make a left turn from Harrison Street to Second Street and a right turn from Second Street to Baltimore Street, before turning left from Baltimore Street onto SR-56/East Main Street. Additionally, vehicular access to/from adjacent properties is limited during peak hour traffic due to congestion along US 421. The poor access has contributed to the underutilization of several

parcels along US 421 north of the bridge.

Crash records were collected from the Indiana Department of Transportation (INDOT) over a four year period (January 1, 2012 through September 30, 2015). North of the US 421 Bridge, 22 crashes were reported along US 421 south of the intersection with SR-56.

- One crash was reported at the Harrison Street/Fillmore Alley intersection.
- Six crashes, including two injury collisions, were reported at the Harrison Street intersection with First Street and the adjacent approaches. The majority of these crashes were rear-end and right-angle collisions; northbound bridge traffic will often use First Street as a cut-through to avoid delays along Second Street and Baltimore Street. The right-angle collisions can be traced to drivers failing to yield right-of-way.
- Six crashes were reported at the Harrison Street/Second Street intersection and adjacent approaches. The majority of these crashes were rear-end (vehicles backing up to clear space for turning trucks) and side-swipe (trucks not being able to make left turns and avoid oncoming vehicles within the pavement limits).
- Four crashes, including one injury collision, were reported at the Second Street/Baltimore Street intersection and the adjacent approaches. The majority of these crashes can be traced to drivers failing to yield right of-way and performing unsafe turning maneuvers.
- Five crashes, including one injury collision, were reported at the Baltimore Street intersection with SR-56. The majority of these crashes can be traced to drivers failing to yield right of-way and performing unsafe turning maneuvers.

2) Environmental Impact of Trucks

The existing US 421 corridor accommodates approximately 920 commercial trucks per day. Tight turning radii at roadways intersecting US 421 are inadequate for truck movements, forcing large trucks to travel outside of their designated lane and use multiple lanes when turning. Trucks often must wait until the adjacent lane is clear of other traffic before completing turns. Alternately, trucks resort to driving on the outside curb and/or sidewalk to complete turns if there is not a clear space in the adjacent lane. The noise, vibration, and air pollution caused by idling, braking, and accelerating trucks along the existing US 421 route degrades the quality of life for adjacent residents.

3) Pedestrian Connectivity

Currently, the US 421 corridor has limited means to accommodate pedestrian traffic (i.e. sidewalks, multi-use paths, bike lanes, etc.). The lack of pedestrian facilities along this corridor creates disconnectivity among neighborhoods, businesses, historic sites, and the new pedestrian facility on the Milton-Madison Bridge. Also, the new pedestrian facility along the Milton-Madison Bridge is inaccessible from 2nd Street. Pathway users must access the facility from a stairway underneath the bridge.

Residents, business owners, and local officials view US 421 north of the Milton-Madison Bridge as a gateway into their community. Several underutilized properties have been identified adjacent to existing US 421 north of the Milton-Madison Bridge. Facilitating

pedestrian connectivity to these properties will bring added visibility and marketability to this area.

4) Impacts to Contributing Historic Properties

Currently, thirty-three properties identified as contributing to the Madison NHL District and contributing to the Madison NRHP Historic District are adjacent to the existing US 421 alignment. The existing alignment bisects a residential neighborhood within the Madison NHL District and Madison NRHP Historic District. All properties within this neighborhood, including thirty-three contributing properties to the Madison NHL District and contributing to the Madison NRHP Historic District are subject to air, noise, and vibration pollutants. In addition, access to these properties is often impaired or limited during peak hours due to the heavy volume of truck traffic.

Purpose of the US 421 Road Construction Project

The purpose of the proposed project is to increase operational efficiency and traffic safety by relieving congestion at a series of 90-degree turns on US 421 between the Milton-Madison Bridge and Main Street, while reducing the environmental impacts associated with idling and braking of trucks. Additionally, the project will support opportunities for economic development in the community by managing access and enhancing pedestrian accessibility in the project area.

The purpose of the proposed project is summarized in the following four bullets:

- Enhance mobility and safety in the corridor, distinguishing between local and through traffic.
- Reduce the environmental impact of trucks through the corridor.
- Support opportunities for economic development in the community by managing access and enhancing pedestrian accessibility.
- Reduce the number of contributing historic properties impacted by US 421 vehicular traffic.

Project Description:

The proposed project is located within Jefferson County, Indiana in the City of Madison and located through a portion of the National Historic Landmark Madison Historic District. The proposed corridor improvements, located on the Indiana border of the Ohio River, are immediately adjacent to the Milton-Madison Bridge, providing approach access from the north. The limits of the project area begin at the northern approach to the Milton-Madison Bridge and extend to the intersection of US 421/Baltimore Street and US 421/Main Street to the west and through the intersection of SR 56/Sering Street to the east.

The current alignment routes nearly 11,500 vehicles through a series of 90-degree turns in a mixed commercial and residential neighborhood, causing traffic congestion, safety concerns, and negative environmental impacts. The congestion and environmental pollution is heightened due to the large volume of truck traffic (8% of the overall AADT). Most trucks are forced to idle at the intersections waiting for clear gaps in oncoming traffic because the trucks are required to complete turns outside of their lane due to inadequate turning radii at intersections.

The proposed project analyzed nine alternatives (including the No-build or Do Nothing alternative) based on the ability to improve mobility and safety in the corridor, reduce the environmental impacts of trucks, support economic development by managing access and enhancing pedestrian accessibility, and minimizing impacts to the City of Madison, Jefferson County, and local stakeholders. The preferred alternative is described below:

Four-Leg Two-Way Stop-Control Intersection at 2nd St. & Harrison St.:

The preferred alternative is an "At-Grade" Alignment. US 421 will remain on the existing north-south Harrison Street alignment with a widened intersection and turn radii. North of the Second Street intersection US 421 will follow a new alignment on horizontal curve to the north and west tying into Main Street at Roosevelt Street. US 421 will move north-south without a stop, via a new terrain roadway beginning at the north side of Second Street and tying into Main/Sering Street. Second Street (east-west) will contain a stop. A traffic signal will be constructed at this intersection. A 15 to 20 foot grade change between Second Street and Sering/US 421 will require a retaining wall. SR-56 will become an access road. Please see attachments for a map showing the preferred alternative.

Right-of-Way Information:

The proposed project will require the acquisition of 2.0 acres of additional permanent right-of-way.

Permanent: It is estimated that 2.0 acres of permanent right-of-way will need to be acquired as part of this project. This project will require the acquisition of six structures. Additional permanent right-of-way required for this project can be broken down into the following land uses.

Commercial =	1.4 acres
Residential =	0.6 acres
TOTAL =	2.0 acres

Temporary: The proposed project will require the acquisition of 0.22 acres of temporary right-of-way which will be used for grading and drive construction.

Wetland and Stream Impacts:

The National Wetlands Inventory (NWI) Map shows no wetlands within the project limits. United Consulting performed a jurisdictional determination of the boundaries of "waters of the United States (U.S.)", including wetlands on September 24, 2015 using the U.S. Army Corps of Engineers Wetland Delineation Manual (Technical Report Y-87-1) and the 2010 U.S. Army Corps of Engineers - Midwestern Supplement. The study location included areas within the existing and proposed right-of-way. Three streams were located within the investigation area of the project during the field reconnaissance.

Hazardous Materials:

A recognized environmental condition (REC) is the presence or likely presence of any hazardous substance or petroleum product on a property or facility. A Red Flag Survey was

conducted using the Indiana Geological Survey GIS which revealed three REC sites adjacent to the proposed project. As a result, an environmental site assessment will be required for this project.

Your cooperation in expediting the development of this project is appreciated. Officials with INDOT, FHWA, and the City of Madison want to advance this project to construction as soon as possible to provide for a safe and efficient facility. If you need additional information or have any questions, please contact our office.

Sincerely,
United Consultants

Michael S. Oliphant, AICP
Environmental Specialist

enclosures: Location Maps
Preferred Project Alternative Map
Ground Level Photographs

Graphics are located in Appendix A

c: Natural Resources Conservation Service
Indiana Department of Environmental Management
US Fish and Wildlife Service
US Army Corps of Engineers
Indiana Department of Natural Resources – Division of Water
Indiana State Department of Health
INDOT Aeronautics Division
INDOT Environmental Services
INDOT Public Involvement
HUD
Indiana Geological Survey
National Park Service
Federal Highway Administration
Adam Burns, CMT
Whitney Carlin, INDOT
City of Madison
UNITED File: (15-414)

THIS IS NOT A PERMIT

State of Indiana
DEPARTMENT OF NATURAL RESOURCES
Division of Fish and Wildlife
Early Coordination/Environmental Assessment

DNR #: ER-19761 **Request Received:** May 2, 2017

Requestor: United Consulting
Michael S Oliphant
1625 North Post Road
Indianapolis, IN 46219-1995

Project: Milton-Madison bridge approach roadway improvements, Project 421; Des #1400918

County/Site info: Jefferson

The Indiana Department of Natural Resources has reviewed the above referenced project per your request. Our agency offers the following comments for your information and in accordance with the National Environmental Policy Act of 1969.

If our agency has regulatory jurisdiction over the project, the recommendations contained in this letter may become requirements of any permit issued. If we do not have permitting authority, all recommendations are voluntary.

Regulatory Assessment: This proposal may require the formal approval of our agency pursuant to the Flood Control Act (IC 14-28-1) for any proposal to construct, excavate, or fill in or on the floodway of a stream or other flowing waterbody which has a drainage area greater than one square mile. Please submit more detailed plans to the Division of Water's Technical Services Section if you are unsure whether or not a permit will be required.

Natural Heritage Database: The Natural Heritage Program's data have been checked.
The species below have been documented within 1/2 mile of the project area.
A) Mussel: Ohio Pigtoe (Pleurobema cordatum), state special concern
B) Birds:
1. Barn Owl (Tyto alba), state endangered
2. Peregrine Falcon (Falco peregrinus), state special concern

Fish & Wildlife Comments: We do not foresee any impacts to the Ohio Pigtoe as a result of this project.

Avoid and minimize impacts to fish, wildlife, and botanical resources to the greatest extent possible, and compensate for impacts. The following are recommendations that address potential impacts identified in the proposed project area:

1) Birds:
The project area does not provide suitable habitat for barn owls; however, peregrine falcons have been nesting on this bridge in a nest box since 2002, but the next box was moved from the Indiana side to the Kentucky side of the bridge. Therefore, since work will be conducted only on the Indiana side, we do not foresee any impacts to peregrine falcons as a result of this project.

If trees and shrubs are removed for the expansion of the right-of-way, then there may be significant negative effects on migratory birds that are federally protected by the Migratory Bird Treaty Act of 1918. We recommend that either: 1) the area be surveyed for nesting birds and monitored to make sure that any active nests are not disturbed, and work be completed after any active nest has failed or successfully fledged chicks; or 2) work occurs in the fall and winter between early September to early March to avoid disturbing nesting bird species that breed in the spring and summer.

2) Crossing Structures:
Creek crossings should be constructed using a bridge or a three-sided culvert structure instead of box culverts or pipes. Due to natural down-cutting of unconsolidated stream

bed substrates over time, a three-sided culvert or a bridge is recommended over a sumped box culvert, if possible. Do not place riprap in or across the stream bed except at the edges of the structure to protect the footings and at the toe of the stream banks.

3) Riparian Habitat:
We recommend a mitigation plan be developed (and submitted with the permit application, if required) if habitat impacts will occur. The mitigation site should be located in the floodway preferably as close to the impact site as possible and adjacent to existing forested riparian habitat. The DNR's Floodway Habitat Mitigation guidelines (and plant lists) can be found online at:
http://www.in.gov/legislative/iac/20140806-IR-312140295NRA.xml.pdf.

Impacts to non-wetland forest of one (1) acre or more should be mitigated at a minimum 2:1 ratio. If less than one acre of non-wetland forest is removed in a rural setting, replacement should be at a 1:1 ratio based on area. Impacts to non-wetland forest under one (1) acre in an urban setting should be mitigated by planting five trees, at least 2 inches in diameter-at-breast height (dbh), for each tree which is removed that is 10" dbh or greater (5:1 mitigation based on the number of large trees). Impacts to wetland habitat should be mitigated at the appropriate ratio according to the 1991 INDOT/IDNR/USFWS Memorandum of Understanding.

The additional measures listed below should be implemented to avoid, minimize, or compensate for impacts to fish, wildlife, and botanical resources:
1. Revegetate all bare and disturbed areas with a mixture of grasses (excluding all varieties of tall fescue), legumes, and native shrub and hardwood tree species as soon as possible upon completion.
2. Minimize and contain within the project limits inchannel disturbance and the clearing of trees and brush.
3. Do not work in the waterway from April 1 through June 30 without the prior written approval of the Division of Fish and Wildlife.
4. Do not cut any trees suitable for Indiana bat or Northern Long-eared bat roosting (greater than 3 inches dbh, living or dead, with loose hanging bark, or with cracks, crevices, or cavities) from April 1 through September 30.
5. Do not excavate in the low flow area except for the placement of piers, foundations, and riprap, or removal of the old structure.
6. Do not construct any temporary runarounds, causeways, cofferdams, pump around or stream diversion systems.
7. Use minimum average 6 inch graded riprap stone extended below the normal water level to provide habitat for aquatic organisms in the voids.
8. Appropriately designed measures for controlling erosion and sediment must be implemented to prevent sediment from entering the stream or leaving the construction site; maintain these measures until construction is complete and all disturbed areas are stabilized.
9. Seed and protect all disturbed slopes that are 3:1 or steeper with heavy duty biodegradable erosion control blankets (follow manufacturer's recommendations for selection and installation; seed and apply mulch on all other disturbed areas.

Contact Staff:

Christie L. Stanifer, Environ. Coordinator, Fish & Wildlife
Our agency appreciates this opportunity to be of service. Please contact the above staff member at (317) 232-4080 if we can be of further assistance.

Christie L. Stanifer **Date:** June 1, 2017
Christie L. Stanifer
Environ. Coordinator
Division of Fish and Wildlife

USDA
United States Department of Agriculture

Natural Resources Conservation Service
Indiana State Office
6013 Lakeside Boulevard
Indianapolis, Indiana 46278
317-290-3200

May 4, 2017

Michael S. Oliphant, AICP
Environmental Specialist
United Consulting
1625 North Post Road
Indianapolis, Indiana 46219

Dear Mr. Oliphant:

The proposed Milton-Madison Bridge Roadway Approach Improvement project over the Ohio River located in the City of Madison, Jefferson County, Indiana (Des No. 1400918), as referred to in your letter received May 2, 2017, will not cause a conversion of prime farmland.
If you need additional information, please contact Rick Neilson at 317-295-5875.

Sincerely,

Jane E. Hardisty

JANE E. HARDISTY
State Conservationist

Enclosure

Helping People Help the Land.

USDA is an equal opportunity provider and employer.

U.S. DEPARTMENT OF AGRICULTURE
Natural Resources Conservation Service

NRCS-CPA-106
(Rev. 1-91)

FARMLAND CONVERSION IMPACT RATING FOR CORRIDOR TYPE PROJECTS

PART I *(To be completed by Federal Agency)*	3. Date of Land Evaluation Request 5/2/17	4. Sheet 1 of 1
1. Name of Project Project 421	5. Federal Agency Involved FHWA	
2. Type of Project Roadway Improvement Project	6. County and State Jefferson County, Indiana	
PART II *(To be completed by NRCS)*	1. Date Request Received by NRCS 5/2/17	2. Person Completing Form SV
3. Does the corridor contain prime, unique statewide or local important farmland? (If no, the FPPA does not apply - Do not complete additional parts of this form). YES ☐ NO ☒		4. Acres Irrigated / Average Farm Size
5. Major Crop(s)	6. Farmable Land in Government Jurisdiction Acres: %	7. Amount of Farmland As Defined in FPPA Acres: %
8. Name Of Land Evaluation System Used	9. Name of Local Site Assessment System	10. Date Land Evaluation Returned by NRCS 5/4/17

PART III *(To be completed by Federal Agency)*	Alternative Corridor For Segment			
	Corridor A	Corridor B	Corridor C	Corridor D
A. Total Acres To Be Converted Directly	0			
B. Total Acres To Be Converted Indirectly, Or To Receive Services	0			
C. Total Acres In Corridor	0	0	0	0
PART IV *(To be completed by NRCS) Land Evaluation Information*				
A. Total Acres Prime And Unique Farmland				
B. Total Acres Statewide And Local Important Farmland				
C. Percentage Of Farmland in County Or Local Govt. Unit To Be Converted				
D. Percentage Of Farmland in Govt. Jurisdiction With Same Or Higher Relative Value				
PART V *(To be completed by NRCS) Land Evaluation Information Criterion Relative value of Farmland to Be Serviced or Converted (Scale of 0 - 100 Points)*				
PART VI *(To be completed by Federal Agency) Corridor Assessment Criteria (These criteria are explained in 7 CFR 658.5(c))* — Maximum Points				
1. Area in Nonurban Use — 15				
2. Perimeter in Nonurban Use — 10				
3. Percent Of Corridor Being Farmed — 20				
4. Protection Provided By State And Local Government — 20				
5. Size of Present Farm Unit Compared To Average — 10				
6. Creation Of Nonfarmable Farmland — 25				
7. Availablility Of Farm Support Services — 5				
8. On-Farm Investments — 20				
9. Effects Of Conversion On Farm Support Services — 25				
10. Compatibility With Existing Agricultural Use — 10				
TOTAL CORRIDOR ASSESSMENT POINTS — 160	0	0	0	0
PART VII *(To be completed by Federal Agency)*				
Relative Value Of Farmland (From Part V) — 100				
Total Corridor Assessment (From Part VI above or a local site assessment) — 160	0	0	0	0
TOTAL POINTS *(Total of above 2 lines)* — 260	0	0	0	0

1. Corridor Selected:	2. Total Acres of Farmlands to be Converted by Project:	3. Date Of Selection:	4. Was A Local Site Assessment Used? YES ☐ NO ☑

5. Reason For Selection:

Signature of Person Completing this Part: | DATE

NOTE: Complete a form for each segment with more than one Alternate Corridor

May 4, 2017

66-33
United Consulting
Attention: Mr. Michael S. Oliphant
1625 North Post Road
Indianapolis, Indiana 46219

Dear Mr. Michael S. Oliphant,

RE: Wellhead Protection Area
Proximity Determination
Des No 1400918
Approach roadway to Milton
Madison Bridge
Madison, Indiana

Upon review of the above referenced project site, it has been determined that the proposed project area **is located within** a Wellhead Protection Area. If the contact information is needed for the WHPA, please contact the reference located at the bottom of the letter for the appropriate information. The information is accurate to the best of our knowledge; however, there are in some cases a few factors that could impact the accuracy of this determination. Some Wellhead Protection Area Delineations have not been submitted, and many have not been approved by this office. In these cases we use a 3,000 foot fixed radius buffer to make the proximity determination. To find the status of a Public Water Supply System's (PWSS's) Wellhead Protection Area Delineation please visit our tracking database at http://www.in.gov/idem/cleanwater/2456.htm and scroll to the bottom of the page.

Note: the Drinking Water Branch has launched a new self service feature which allows one to determine wellhead proximity without submitting the application form. Use the following instructions:

1. Go to http://idemmaps.idem.in.gov/whpa2/
2. Use the search tool located in the upper left hand corner of the application to zoom to your site of interest by way of city, county, or address; or use the mouse to click on the site of interest displayed on the map.
3. Once the site of interest has been located and selected, use the print tool to create a .pdf of a wellhead protection area proximity determination response.

In the future please consider using this self service feature if it is suits your needs.

If you have any additional questions please feel free to contact me at the address above or at (317) 233-9158 and aturnbow@idem.in.gov.

Sincerely,

Alisha Turnbow

Alisha Turnbow,
Environmental Manager, Ground Water Section, Drinking Water Branch, Office of Water Quality

From:	Brian Jackson
To:	Campbell, Mike; Oliphant, Mike
Cc:	Jay Thompson; Huckaby, Robert (Rob.Huckaby@stantec.com)
Subject:	Wellhead Protection Area - US 421
Date:	Friday, May 12, 2017 10:17:43 AM
Attachments:	Map 6 Summary of 1 year travel time all scenarios_MSH(revised 10_10_12).pdf (12) Map 12 5 year travel time all scenarios_MSH(revised 10_10_12).pdf

Mike,

Please see the attached PDFs for information on our existing Wellhead Protection Area. As you can see from the 5 year drawing, the heavy, bold dark line showing the "Approved Wellhead Protection Area" is depicting the Area as it was laid out in the past. The red hatched areas are now delineating the current Wellhead Protection Area (WPA) as was established in the most recent Wellhead Protection Area study. It would appear that the 421 project is falling outside the 5 year travel time scenario. However, once the construction limits of the project are established, it would be beneficial for us to overlay your construction limits with our WPA to make sure that there is no overlap. I have included our engineer from Stantec (Rob Huckaby) in this email chain to make sure everyone is kept in the loop on this and so that he can correct my explanation if I have misstated anything.
Thanks and let me know if you have any questions or concerns.

Brian Jackson
Utilities Manager
City of Madison
101 W Main Street
Madison, IN 47250
812-265-8326 [office]

The referenced attachments were removed per INDOT CE guidance regarding confidential information.

Indiana Department of Environmental Management

We make Indiana a cleaner, healthier place to live.

Mike Pence
Governor

Thomas W. Easterly
Commissioner

100 North Senate Avenue
Indianapolis , Indiana 46206

(317) 232-8603
800) 451-6027
www.IN.gov/idem

Indiana Department of Transportation
Whitney Carlin, PE, PLS
185 Agrico Lane
Seymour , IN 47274

United Consulting
Michael Oliphant
1625 N. Post Road
Indianapolis , IN 46219

Date

To Engineers and Consultants Proposing Roadway Construction Projects:

RE: The Indiana Department of Transportation (INDOT) and Federal Highway Administration (FHWA) desire to improve the approach roadway to the Milton-Madison Bridge over the Ohio River. The proposed project is located within Jefferson County, Indiana in the City of Madison and located through a portion of the National Historic Landmark District (NHL) and the National Register of Historic Places (NRHP) - Madison Historic District. The project is located in Section 2, Township 3 North, Range 10 East in Madison Township, Jefferson County.

This letter from the Indiana Department of Environmental Management (IDEM) serves as a standardized response to enquiries inviting IDEM comments on roadway construction, reconstruction, or other improvement projects within existing roadway corridors when the proposed scope of the project is beneath the threshold requiring a formal National Environmental Policy Act-mandated Environmental Assessment or Environmental Impact Statement. As the letter attempts to address all roadway-related environmental topics of potential concern, it is possible that not every topic addressed in the letter will be applicable to your particular roadway project.

For additional information on specific roadway-related topics of interest, please visit the appropriate Web pages cited below, many of which provide contact information for persons within the various program areas who can answer questions not fully addressed in this letter. Also please be mindful that some environmental requirements may be subject to change and so each person intending to include a

copy of this letter in their project documentation packet is advised to download the most recently revised version of the letter; found at: http://www.in.gov/idem/5283.htm.

To ensure that all environmentally-related issues are adequately addressed, IDEM recommends that you read this letter in its entirety, and consider each of the following issues as you move forward with the planning of your proposed roadway construction, reconstruction, or improvement project:

WATER AND BIOTIC QUALITY

1. Section 404 of the Clean Water Act requires that you obtain a permit from the U.S. Army Corps of Engineers (USACE) before discharging dredged or fill materials into any wetlands or other waters, such as rivers, lakes, streams, and ditches. Other activities regulated include the relocation, channelization, widening, or other such alteration of a stream, and the mechanical clearing (use of heavy construction equipment) of wetlands. Thus, as a project owner or sponsor, it is your responsibility to ensure that no wetlands are disturbed without the proper permit. Although you may initially refer to the U.S. Fish and Wildlife Service National Wetland Inventory maps as a means of identifying potential areas of concern, please be mindful that those maps do not depict jurisdictional wetlands regulated by the USACE or the Department of Environmental Management. A valid jurisdictional wetlands determination can only be made by the USACE, using the 1987 Wetland Delineation Manual.

   USACE recommends that you have a consultant check to determine whether your project will abut, or lie within, a wetland area. To view a list of consultants that have requested to be included on a list posted by the USACE on their Web site, see USACE Permits and Public Notices (http://www.lrl.usace.army.mil/orf /default.asp) and then click on "Information" from the menu on the right-hand side of that page. Their "Consultant List" is the fourth entry down on the "Information" page. Please note that the USACE posts all consultants that request to appear on the list, and that inclusion of any particular consultant on the list does not represent an endorsement of that consultant by the USACE, or by IDEM.

   Much of northern Indiana (Newton, Lake, Porter, LaPorte, St. Joseph, Elkhart, LaGrange, Steuben, and Dekalb counties; large portions of Jasper, Starke, Marshall, Noble, Allen, and Adams counties; and lesser portions of Benton, White, Pulaski, Kosciusko, and Wells counties) is served by the USACE District Office in Detroit (313-226-6812). The central and southern portions of the state (large portions of Benton, White, Pulaski, Kosciosko, and Wells counties; smaller portions of Jasper, Starke, Marshall , Noble, Allen, and Adams counties; and all other Indiana counties located in north-central, central, and southern Indiana) are served by the USACE Louisville District Office (502-315-6733).

   Additional information on contacting these U.S. Army Corps of Engineers (USACE) District Offices, government agencies with jurisdiction over wetlands, and other water quality issues, can be found at http://www.in.gov/idem/4396.htm. IDEM recommends that impacts to wetlands and other water resources be avoided to the fullest extent.

2. In the event a Section 404 wetlands permit is required from the USACE, you also must obtain a Section 401 Water Quality Certification from the IDEM Office of Water Quality Wetlands Program. To learn more about the Wetlands Program, visit: http://www.in.gov/idem/4384.htm.

3. If the USACE determines that a wetland or other water body is isolated and not subject to Clean Water Act regulation, it is still regulated by the state of Indiana . A State Isolated Wetland permit

from IDEM's Office of Water Quality (OWQ) is required for any activity that results in the discharge of dredged or fill materials into isolated wetlands. To learn more about isolated wetlands, contact the OWQ Wetlands Program at 317-233-8488.

4. If your project will involve over a 0.5 acre of wetland impact, stream relocation, or other large-scale alterations to water bodies such as the creation of a dam or a water diversion, you should seek additional input from the OWQ Wetlands Program staff. Consult the Web at: http://www.in.gov/idem/4384.htm for the appropriate staff contact to further discuss your project.

5. Work within the one-hundred year floodway of a given water body is regulated by the Department of Natural Resources, Division of Water. The Division issues permits for activities regulated under the follow statutes:
    - IC 14-26-2 Lakes Preservation Act 312 IAC 11
    - IC 14-26-5 Lowering of Ten Acre Lakes Act No related code
    - IC 14-28-1 Flood Control Act 310 IAC 6-1
    - IC 14-29-1 Navigable Waterways Act 312 IAC 6
    - IC 14-29-3 Sand and Gravel Permits Act 312 IAC 6
    - IC 14-29-4 Construction of Channels Act No related code

    For information on these Indiana (statutory) Code and Indiana Administrative Code citations, see the DNR Web site at: http://www.in.gov/dnr/water/9451.htm . Contact the DNR Division of Water at 317-232-4160 for further information.

    The physical disturbance of the stream and riparian vegetation, especially large trees overhanging any affected water bodies should be limited to only that which is absolutely necessary to complete the project. The shade provided by the large overhanging trees helps maintain proper stream temperatures and dissolved oxygen for aquatic life.

6. For projects involving construction activity (which includes clearing, grading, excavation and other land disturbing activities) that result in the disturbance of one (1), or more, acres of total land area, contact the Office of Water Quality – Watershed Planning Branch (317/233-1864) regarding the need for of a Rule 5 Storm Water Runoff Permit. Visit the following Web page
    - http://www.in.gov/idem/4902.htm

    To obtain, and operate under, a Rule 5 permit you will first need to develop a Construction Plan (http://www.in.gov/idem/4917.htm#constreq), and as described in 327 IAC 15-5-6.5 (http://www.in.gov/legislative/iac/T03270/A00150 [PDF], pages 16 through 19). Before you may apply for a Rule 5 Permit, or begin construction, you must submit your Construction Plan to your county Soil and Water Conservation District (SWCD) (http://www.in.gov/isda/soil/contacts/map.html).

    Upon receipt of the construction plan, personnel of the SWCD or the Indiana Department of Environmental Management will review the plan to determine if it meets the requirements of 327 IAC 15-5. Plans that are deemed deficient will require re-submittal. If the plan is sufficient you will be notified and instructed to submit the verification to IDEM as part of the Rule 5 Notice of Intent (NOI) submittal. Once construction begins, staff of the SWCD or Indiana Department of Environmental Management will perform inspections of activities at the site for compliance with the regulation.

Please be mindful that approximately 149 Municipal Separate Storm Sewer System (MS4) areas are now being established by various local governmental entities throughout the state as part of the implementation of Phase II federal storm water requirements. All of these MS4 areas will eventually take responsibility for Construction Plan review, inspection, and enforcement. As these MS4 areas obtain program approval from IDEM, they will be added to a list of MS4 areas posted on the IDEM Website at: http://www.in.gov/idem/4900.htm.

If your project is located in an IDEM-approved MS4 area, please contact the local MS4 program about meeting their storm water requirements. Once the MS4 approves the plan, the NOI can be submitted to IDEM.

Regardless of the size of your project, or which agency you work with to meet storm water requirements, IDEM recommends that appropriate structures and techniques be utilized both during the construction phase, and after completion of the project, to minimize the impacts associated with storm water runoff. The use of appropriate planning and site development and appropriate storm water quality measures are recommended to prevent soil from leaving the construction site during active land disturbance and for post construction water quality concerns. Information and assistance regarding storm water related to construction activities are available from the Soil and Water Conservation District (SWCD) offices in each county or from IDEM.

7. For projects involving impacts to fish and botanical resources, contact the Department of Natural Resources - Division of Fish and Wildlife (317/232-4080) for addition project input.

8. For projects involving water main construction, water main extensions, and new public water supplies, contact the Office of Water Quality - Drinking Water Branch (317-308-3299) regarding the need for permits.

9. For projects involving effluent discharges to waters of the State of Indiana , contact the Office of Water Quality - Permits Branch (317-233-0468) regarding the need for a National Pollutant Discharge Elimination System (NPDES) permit.

10. For projects involving the construction of wastewater facilities and sewer lines, contact the Office of Water Quality - Permits Branch (317-232-8675) regarding the need for permits.

AIR QUALITY

The above-noted project should be designed to minimize any impact on ambient air quality in, or near, the project area. The project must comply with all federal and state air pollution regulations. Consideration should be given to the following:

1. Regarding open burning, and disposing of organic debris generated by land clearing activities; some types of open burning are allowed (http://www.in.gov/idem/4148.htm) under specific conditions. You also can seek an open burning variance from IDEM.

   However, IDEM generally recommends that you take vegetative wastes to a registered yard waste composting facility or that the waste be chipped or shredded with composting on site (you must register with IDEM if more than 2,000 pounds is to be composted; contact 317/232-0066). The finished compost can then be used as a mulch or soil amendment. You also may bury any vegetative wastes (such as leaves, twigs, branches, limbs, tree trunks and stumps) onsite, although burying large quantities of such material can lead to subsidence problems, later on.

Reasonable precautions must be taken to minimize fugitive dust emissions from construction and demolition activities. For example, wetting the area with water, constructing wind barriers, or treating dusty areas with chemical stabilizers (such as calcium chloride or several other commercial products). Dirt tracked onto paved roads from unpaved areas should be minimized.

Additionally, if construction or demolition is conducted in a wooded area where blackbirds have roosted or abandoned buildings or building sections in which pigeons or bats have roosted for 3-5 years precautionary measures should be taken to avoid an outbreak of histoplasmosis. This disease is caused by the fungus Histoplasma capsulatum, which stems from bird or bat droppings that have accumulated in one area for 3-5 years. The spores from this fungus become airborne when the area is disturbed and can cause infections over an entire community downwind of the site. The area should be wetted down prior to cleanup or demolition of the project site. For more detailed information on histoplasmosis prevention and control, please contact the Acute Disease Control Division of the Indiana State Department of Health at (317) 233-7272.

2. The U.S. EPA and the Surgeon General recommend that people not have long-term exposure to radon at levels above 4 pCi/L. (For a county-by-county map of predicted radon levels in Indiana, visit: http://www.in.gov/idem/4145.htm.)

   The U.S. EPA further recommends that all homes (and apartments within three stories of ground level) be tested for radon. If in-home radon levels are determined to be 4 pCi/L, or higher, EPA recommends a follow-up test. If the second test confirms that radon levels are 4 pCi/L, or higher, EPA recommends the installation of radon-reduction measures. (For a list of qualified radon testers and radon mitigation (or reduction) specialists visit: http://www.in.gov/isdh/regsvcs/radhealth/pdfs/radon_testers_mitigators_list.pdf.) It also is recommended that radon reduction measures be built into all new homes, particularly in areas like Indiana that have moderate to high predicted radon levels.

   To learn more about radon, radon risks, and ways to reduce exposure visit: http://www.in.gov/isdh/regsvcs/radhealth/radon.htm, http://www.in.gov/idem/4145.htm, or http://www.epa.gov/radon/index.html.

3. With respect to asbestos removal: all facilities slated for renovation or demolition (except residential buildings that have (4) four or fewer dwelling units and which will not be used for commercial purposes) must be inspected by an Indiana-licensed asbestos inspector prior to the commencement of any renovation or demolition activities. If regulated asbestos-containing material (RACM) that may become airborne is found, any subsequent demolition, renovation, or asbestos removal activities must be performed in accordance with the proper notification and emission control requirements.

   If no asbestos is found where a renovation activity will occur, or if the renovation involves removal of less than 260 linear feet of RACM off of pipes, less than 160 square feet of RACM off of other facility components, or less than 35 cubic feet of RACM off of all facility components, the owner or operator of the project does not need to notify IDEM before beginning the renovation activity.

   For questions on asbestos demolition and renovation activities, you can also call IDEM's Lead/Asbestos section at 1-888-574-8150.

However, in all cases where a demolition activity will occur (even if no asbestos is found), the owner or operator must still notify IDEM 10 working days prior to the demolition, using the form found at http://www.in.gov/icpr/webfile/formsdiv/44593.pdf.

Anyone submitting a renovation/demolition notification form will be billed a notification fee based upon the amount of friable asbestos containing material to be removed or demolished. Projects that involve the removal of more than 2,600 linear feet of friable asbestos containing materials on pipes, or 1,600 square feet or 400 cubic feet of friable asbestos containing material on other facility components, will be billed a fee of $150 per project; projects below these amounts will be billed a fee of $50 per project. All notification remitters will be billed on a quarterly basis.

For more information about IDEM policy regarding asbestos removal and disposal, visit: http://www.in.gov/idem/4983.htm.

4. With respect to lead-based paint removal: IDEM encourages all efforts to minimize human exposure to lead-based paint chips and dust. IDEM is particularly concerned that young children exposed to lead can suffer from learning disabilities. Although lead-based paint abatement efforts are not mandatory, any abatement that is conducted within housing built before January 1, 1978 , or a child-occupied facility is required to comply with all lead-based paint work practice standards, licensing and notification requirements. For more information about lead-based paint removal visit: http://www.in.gov/isdh/19131.htm.

5. Ensure that asphalt paving plants are permitted and operate properly. The use of cutback asphalt, or asphalt emulsion containing more than seven percent (7%) oil distillate, is prohibited during the months April through October. See 326 IAC 8-5-2 , Asphalt Paving Rule (http://www.ai.org/legislative/iac/T03260/A00080.PDF).

6. If your project involves the construction of a new source of air emissions or the modification of an existing source of air emissions or air pollution control equipment, it will need to be reviewed by the IDEM Office of Air Quality (OAQ). A registration or permit may be required under 326 IAC 2 (View at: www.ai.org/legislative/iac/t03260/a00020.pdf.) New sources that use or emit hazardous air pollutants may be subject to Section 112 of the Clean Air Act and corresponding state air regulations governing hazardous air pollutants.

7. For more information on air permits visit: http://www.in.gov/idem/4223.htm, or to initiate the IDEM air permitting process, please contact the Office of Air Quality Permit Reviewer of the Day at (317) 233-0178 or OAMPROD atdem.state.in.us.

LAND QUALITY

In order to maintain compliance with all applicable laws regarding contamination and/or proper waste disposal, IDEM recommends that:

1. If the site is found to contain any areas used to dispose of solid or hazardous waste, you need to contact the Office of Land Quality (OLQ)at 317-308-3103.

2. All solid wastes generated by the project, or removed from the project site, need to be taken to a properly permitted solid waste processing or disposal facility. For more information, visit http://www.in.gov/idem/4998.htm.

3. If any contaminated soils are discovered during this project, they may be subject to disposal as hazardous waste. Please contact the OLQ at 317-308-3103 to obtain information on proper disposal procedures.

4. If PCBs are found at this site, please contact the Industrial Waste Section of OLQ at 317-308-3103 for information regarding management of any PCB wastes from this site.

5. If there are any asbestos disposal issues related to this site, please contact the Industrial Waste Section of OLQ at 317-308-3103 for information regarding the management of asbestos wastes (Asbestos removal is addressed above, under Air Quality).

6. If the project involves the installation or removal of an underground storage tank, or involves contamination from an underground storage tank, you must contact the IDEM Underground Storage Tank program at 317/308-3039. See: http://www.in.gov/idem/4999.htm.

FINAL REMARKS

Should you need to obtain any environmental permits in association with this proposed project, please be mindful that IC 13-15-8 requires that you notify all adjoining property owners and/or occupants within ten days your submittal of each permit application. However, if you are seeking multiple permits, you can still meet the notification requirement with a single notice if all required permit applications are submitted with the same ten day period.

Should the scope of the proposed project be expanded to the extent that a National Environmental Policy Act Environmental Assessment (EA) or Environmental Impact Statement (EIS) is required, IDEM will actively participate in any early interagency coordination review of the project.

Meanwhile, please note that this letter does not constitute a permit, license, endorsement or any other form of approval on the part of the Indiana Department of Environmental Management regarding any project for which a copy of this letter is used. Also note that is it the responsibility of the project engineer or consultant using this letter to ensure that the most current draft of this document, which is located at http://www.in.gov/idem/5284.htm, is used.

Sincerely,

Thomas W. Easterly
Commissioner

Signature(s) of the Applicant

I acknowledge that the following proposed roadway project will be financed in part, or in whole, by public monies.

Project Description

The Indiana Department of Transportation (INDOT) and Federal Highway Administration (FHWA) desire to improve the approach roadway to the Milton-Madison Bridge over the Ohio River. The proposed project is located within Jefferson County, Indiana in the City of Madison and located through a portion of the National Historic Landmark District (NHL) and the National Register of Historic Places (NRHP) - Madison Historic District. The project is located in Section 2, Township 3 North, Range 10 East in Madison Township, Jefferson County.

With my signature, I do hereby affirm that I have read the letter from the Indiana Department of Environment that appears directly above. In addition, I understand that in order to complete that project in which I am interested, with a minimum of impact to the environment, I must consider all the issues addressed in the aforementioned letter, and further, that I must obtain any required permits.

Date: 06/27/2017

Signature of the INDOT
Project Engineer or Other Responsible Agent Whitney Carlin PE, PLS Digitally signed by Whitney Carlin PE, PLS DN: cn=Whitney Carlin PE, PLS, o=INDOT, ou=Capital Program Management, email=wcarlin@indot.in.gov, c=US Date: 2017.06.27 06:31:56 -04'00'

Whitney Carlin, PE, PLS

Date: 7/17/17

Signature of the
For Hire Consultant

Michael Oliphant

INDIANA DEPARTMENT OF TRANSPORTATION

100 North Senate Avenue
Room N955
Indianapolis, Indiana 46204

PHONE: (317) 232-1477
FAX: (317) 232-1499

Eric Holcomb, Governor
Joe McGuinness, Commissioner

May 10, 2017

Mr. Michael S. Oliphant, Environmental Specialist
United Consulting
1625 North Post Road
Indianapolis, Indiana 46219

Subject: Early Coordination Review (Des. No. 1400918)

Dear Mr. Oliphant,

In response to your request on May 2, 2017 for early coordination review of roadway approac project to the Milton-Madison Bridge over the Ohio River in Madison, Indiana; the Indiana Department of Transportation, Office of Aviation has reviewed the information and provides the following:

Are there any existing or proposed public-use airports within 5 nautical miles of the project limits *(IC 8-21-10-6)***?**
The Madison Municipal Airport is located approximately 4.5 nautical miles northwest of the proposed project site.

Will an Indiana Tall Structure permit *(IC 8-21-10-3-a)* **and/or Noise Sensitive** *(IC 8-21-10-3-b)* **permit be required?**
Based upon the provided information, an Indiana Tall Structure permit would not be required unless the project involves the construction of a temporary or permanent structure exceeding a height of 200 feet above ground level.

For any questions related to Indiana Tall Structure and/or Noise Sensitive permitting, please contact James Kinder at (317) 232-1485 or jkinder2@indot.in.gov.

Sincerely,

Adam French

Adam French
Chief Airport Inspector, Office of Aviation
Indiana Department of Transportation

Appendix C

Historic and Cultural Resources

FEDERAL HIGHWAY ADMINISTRATION'S
SECTION 4(F) COMPLIANCE REQUIREMENTS (FOR HISTORIC PROPERTIES) AND
SECTION 106 FINDINGS AND DETERMINATIONS
AREA OF POTENTIAL EFFECTS
ELIGIBILITY DETERMINATIONS
EFFECT FINDING
US 421 NEW ROAD CONSTRUCTION PROJECT
IN THE CITY OF MADISON, JEFFERSON COUNTY, INDIANA
DES NO.: 1400918

AREA OF POTENTIAL EFFECTS
(Pursuant to 36 CFR § 800.4(a)(1))

The Area of Potential Effects (APE) for this project includes properties adjacent to or near the limits of the preliminary study area. The preliminary study area encompasses the footprint of the alternatives carried forward that meet purpose and need. The APE is bound approximately by St. Michael's Avenue to the west, East Third Street to the north, Ferry Street to the east, and Vaughn Drive to the south. The APE for archaeological resources is defined as the entirety of any parcel located within or partially within the footprint of the preferred alternative. (See Appendix A: Maps and Appendix B: Plans & Drawings.)

ELIGIBILITY DETERMINATIONS
(Pursuant to 36 CFR § 800.4(c)(2))

There are two resources listed in the National Register of Historic Places (NRHP) or designated a National Historic Landmark (NHL):

Madison NRHP District – The Madison NRHP District contains more than 2,200 resources and was listed in 1973. At the time of the nomination, the Madison NRHP District was recognized for having significance in the areas of Architecture, Commerce, and Transportation. The district is also significant in the areas of Industry and Recreation. The district's period of significance begins in 1806 and for the purposes of this project, has been extended to 1970 (fifty years from the project's likely construction).

Madison, Indiana NHL District – The NHL, designated as such in 2006, contains 1,695 Contributing resources and 401 Non-Contributing resources. The NHL is significant under the thematic framework of "Expressing Cultural Values" as Madison "embodies the distinguishing characteristics of nearly all popular architectural styles from the early nineteenth to early twentieth centuries as demonstrated in a small river town." It is also significant under the thematic framework of "Creating Social Institutions and Movements." Specifically: "the community of Madison was integrally involved in the mid-nineteenth century national issues of Abolitionism, the Underground Railroad, and the growth of African-American communities." The period of significance is circa 1817 to circa 1939.

EFFECT FINDING
Madison NRHP District – Adverse Effect
Madison, Indiana NHL District – Adverse Effect

The Federal Highway Administration (FHWA) has determined a finding of "Adverse Effect" is appropriate for this undertaking. FHWA respectfully requests the Indiana State Historic Preservation Officer (SHPO) provide written concurrence with the Section 106 determination of effect for these properties and the project's overall effect finding of "Historic Properties Affected: Adverse Effect."

SECTION 4(F) COMPLIANCE REQUIREMENTS (for historic properties)
Madison NRHP District - This undertaking will convert property from the Madison NRHP District, a Section 4(f) historic property, to a transportation use; the FHWA has determined the appropriate Section 106 finding is "Adverse Effect"; and therefore a Section 4(f) evaluation must be completed for the Madison NRHP District.

Madison, Indiana NHL District
This undertaking will convert property from the Madison, Indiana NHL District, a Section 4(f) historic property, to a transportation use; the FHWA has determined the appropriate Section 106 finding is "Adverse Effect"; and therefore a Section 4(f) evaluation must be completed for the Madison, Indiana NHL District.

Michelle Allen

for Mayela Sosa,
FHWA Division Administrator

Feb. 14, 2017

Approved Date

US 421 NEW ROAD PROJECT
IN THE CITY OF MADISON, JEFFERSON COUNTY, INDIANA
DES NO.: 1400918 // DHPA No.: 18317

FEDERAL HIGHWAY ADMINISTRATION
DOCUMENTATION OF SECTION 106 FINDING OF ADVERSE EFFECT
SUBMITTED TO THE STATE HISTORIC PRESERVATION OFFICER
PURSUANT TO 36 CFR 800.5(c)
US 421 NEW ROAD CONSTRUCTION PROJECT
IN THE CITY OF MADISON, JEFFERSON COUNTY, INDIANA
DES NO.: 1400918

1. DESCRIPTION OF THE UNDERTAKING

The Indiana Department of Transportation (INDOT) with funding from the Federal Highway Administration (FHWA) proposes corridor improvements for United States (US) 421 at its approach to the Milton-Madison Bridge over the Ohio River. The proposed project is located within Jefferson County in the City of Madison, Indiana. The limits of the preliminary project area begin at the northern approach to the Milton-Madison Bridge and extend through the intersection of US 421/Baltimore Street and US 421/Main Street to the west and through the intersection of State Road (SR) 56/Sering Street to the east. (See Appendix B: Plans & Drawings.)

The project area is located in a dense urban setting with mostly historic-era residential, religious, recreational, municipal, industrial, and educational buildings and facilities.

36 CFR § 800.16(d) defines the Area of Potential Effects (APE) as the "geographic area or areas within which an undertaking may directly or indirectly cause alterations in the character or use of historic properties, if any such properties exist. The area of potential effects is influenced by the scale and nature of an undertaking and may be different for different kinds of effects caused by the undertaking."

The aboveground APE includes properties adjacent to or near the limits of the preliminary study area. The preliminary study area encompasses the footprint of the alternatives carried forward that meet purpose and need. The APE is bound approximately by St. Michael's Avenue to the west, East Third Street to the north, Ferry Street to the east, and Vaughn Drive to the south. The APE for archaeological resources is defined as the entirety of any parcel located within or partially within the footprint of the preferred alternative. (See Appendix A: Maps and Appendix B: Plans & Drawings.)

2. EFFORTS TO IDENTIFY HISTORIC PROPERTIES

Pursuant to 36 CFR § 800.4(b), Crawford Murphy & Tilly (CMT)—INDOT's engineering consultants—charged Weintraut & Associates, Inc. (W&A) with identifying and evaluating historic properties. W&A initiated aboveground efforts by reviewing properties listed in the National Register of Historic Places (NRHP), National Historic Landmark (NHL) Program, Indiana Register of Historic Sites and Structures (State Register), Indiana Statewide Historic Bridge Inventory, Historic American Buildings Survey (HABS), Indiana Historic Sites and Structures Inventory (IHSSI) via the *Jefferson County Interim Report,* and the State Historical Architectural and Archaeological Research Database (SHAARD) for previously identified properties. Previously identified historic properties include the Madison, Indiana NHL (2006) and Madison NRHP (1973) districts.

In conducting research, historians examined primary and secondary resources. Documentary research for the project included a review of local histories, Sanborn Fire Insurance maps, historic mapping and photographs, aerial photographs, and online resources. Staff for W&A reviewed nineteenth century maps, postal records, and other sources available from the Indiana Historical Society. A historian also conducted research at the Jefferson County Historical Society and

consulted with knowledgeable volunteers and individuals about the history of the area and specific resources.

Historians for W&A conducted a site survey on October 1, 2015. (Follow-up survey occurred on November 5, 2015, and December 9, 2015). During the site surveys, historians reviewed the APE and recorded landscape features to aid in the development of a Historic Property Report (HPR). (See Appendix E: Photographs.)

As explained in more detail later in this document, Section 110(f) of the National Historic Preservation Act (NHPA) requires, in part, that federal agencies give NHLs special consideration in their planning processes, minimizing direct and adverse harm "to the maximum extent possible." As part of FHWA's responsibilities under Section 110, on October 8, 2015, INDOT, FHWA, and their consultants held a conference call with a representative of the National Park Service (NPS), Michele Curran, Ph.D., to discuss the project, in advance of the invitation to consulting parties. They discussed the project overview and schedule, status of the Section 106 process, the Memorandum of Agreement (MOA) from the Milton-Madison Bridge project, and the known historic properties in the APE of this project: the NRHP & NHL historic districts. (See Appendix C: Correspondence for the meeting agenda.)

In a letter sent on October 9, 2015 (dated October 5, 2015), INDOT on behalf of FHWA initiated consultation by inviting the following parties to participate in Section 106 consultation: Nathan Adams, resident; Bob Canida, resident; Jefferson County Historical Society; Patrick Cunningham, resident; National Park Service (NPS); Camille Fife, resident; Madison Main Street Program; Madison Historic District Board of Review; Cornerstone Society; Tracey Keller, resident; Wayne Kyle, resident; Advisory Council on Historic Preservation (ACHP); Link Ludington, resident; National Trust for Historic Preservation; Indiana Landmarks—Southern Regional Office; Historic Madison Foundation; Steven and Elizabeth Thomas, residents; Judith Wolf (resident); Vickie Young, resident; Jefferson County Historic Preservation Council; Jefferson County Historian; United Keetoowah Band of Cherokee Indians; Absentee Shawnee Tribe of Oklahoma; Eastern Shawnee Tribe of Oklahoma; Red Cliff Band of Lake Superior Chippewas; Grand Traverse Band of Ottawa and Chippewa Indians, Michigan; Chippewa-Cree Indians of the Rocky Boy's Reservation (Chippewa-Cree Tribe); Saginaw Chippewa Tribe of Michigan; Miami Tribe of Oklahoma; Peoria Tribe of Indians of Oklahoma; Acting Federal Preservation Officer (FHWA). The Indiana State Historic Preservation Officer (SHPO) was provided a letter dated October 9, 2015, initiating consultation and inviting SHPO's response to the list of consulting parties. (See Appendix C: Correspondence and Appendix D: Consulting Parties for a spreadsheet of listing consulting parties and dates of acceptance/refusal.)

An archaeologist for W&A conducted a records check on October 13, 2015, using the SHAARD database. The records check also included a review of reports, cemetery records, the county interim report, and historic maps. (See Appendix C: Correspondence.)

On October 21, 2015, the United Keetoowah Band of Cherokee Indians in Oklahoma (UKB) acknowledged receipt of the invitation to join consultation and stated they had no comments or objections "at this time...However, if any human remains are inadvertently discovered, please cease all work and contact us immediately." The letter also stated, "UKB reserves the right to re-enter consultation at any time on this project." (See Appendix C: Correspondence.)

The ACHP responded to the invitation to join consultation via a letter dated November 4, 2015. ACHP declined the invitation to join consultation "at this time," but noted "if FHWA determines through consultation with the consulting parties that the undertaking will adversely affect historic properties or that the development of a programmatic agreement is necessary, the FHWA must notify the ACHP in accordance with Section 106 of our regulations . . . In addition, FHWA should provide us with the documentation outline in 36 CFR 800.11(e)." (See Appendix C: Correspondence.)

SHPO responded to the invitation to join consultation on November 4, 2015. SHPO suggested the mayor of the City of Madison and the Jefferson County Board of Commissioners be invited to join Section 106 consultation. These parties were invited to join consultation in letters dated November 4, 2015 and February 2, 2016. (See Appendix C: Correspondence.)

On November 10, 2015, INDOT-Cultural Resources Office (CRO) sent a letter updating consulting parties on the Section 106 process and inviting them to participate in the first consulting parties meeting to be held December 3, 2015, at Clifty Falls State Park. (See Appendix C: Correspondence.)

On December 2, 2015, Elizabeth Merritt, a representative from the National Trust responded to the invitation to join consultation. Merritt stated, "In light of the potential adverse effects of this project on the National Historic Landmark District in Madison, and our involvement in the Milton-Madison Bridge project, the National Trust would like to participate as a consulting party under Section 106 for the US 421 Approach project." (See Appendix C: Correspondence.)

A consulting parties meeting was held December 3, 2015, at the Clifty Falls Inn in Clifty Falls State Park, Madison, Indiana. The meeting discussed the project in general, noting that it was early in the process. The prior study for the Milton-Madison Bridge Project initially included this approach in its scope but this component was later eliminated from the project. It was noted that the prior study is a few years old, and the project team was starting with a blank slate. Consultants explained that a separate Section 106/110 study would be conducted for the current project (US 421 New Road Project) but noted no reports had yet been produced. It was also explained that the project archaeologist had completed a records search of those resources within a one-mile radius and that pending the selection of the preferred alternative, an archaeological field reconnaissance may be necessary. (See Appendix D: Consulting Parties.)

Consulting parties discussed the importance of US 421 as a gateway into Madison and the current adverse conditions due to truck traffic. The group also commented on the importance of the area as a cohesive neighborhood or district. Regarding impacts to historic resources, consulting parties said that the NHL could not be impacted. Kelsey Noack Myers, Chippewa-Cree Indians of the Rocky Boy's Reservation, noted there are tribes with a demonstrated interest in this area prior to the Indian Removal Act. The Ohio River is one example of a resource important to the Chippewa-Cree and others. She asked for more content during consulting party meetings about archaeological resources within the project area. The group also discussed if the APE would expand or contract based on the alternatives. The meeting concluded with the following question being posed by W&A: are there resources so important to the community that they should not be impacted? Camille Fife said that the entire NHL is important as a whole. (See Appendix D: Consulting Parties.)

During the meeting, NPS sent an email to the project team and consulting parties discussing Section 110 of the National Historic Preservation Act and requested "[p]lease keep this law in mind when developing the alternatives for the bridge approaches." (See Appendix C: Correspondence.)

A public information meeting was held later the same day, also at Clifty Falls Inn. At that meeting, attendees shared information with W&A about cultural features of the APE and Madison, including the presence of an underground culvert beneath Harrison Street and the reported location of a burial ground (possibly Native American) at Ferry Street near Park School. Attendees also shared information on specific resources in the APE and offered suggestions or sources for further research. (See Appendix C: Correspondence.)

On December 3, 2015, Happy Smith sent W&A an email providing additional information on the APE. (See Appendix C: Correspondence.)

On December 15, 2015, Jan Vetrhus shared research on the Fulton area history via email. (See Appendix C: Correspondence.)

W&A met with staff of the Survey and Registration team of IDNR-DHPA on January 12, 2016, regarding the Madison NRHP Historic District and its partial overlap with the Madison NHL district within the APE. Participants discussed extending the period of significance for the NRHP district to 1970 (fifty years from the probable construction date), appropriate themes for the extended period of significance for the NRHP, and consideration of Contributing and Non-Contributing properties to the NRHP since none had been included in the nomination. (See Appendix C: Correspondence.)

In January 2016, W&A produced a Historic Property Report (HPR). In that report, W&A identified the Madison, Indiana NHL Historic District and the Madison NRHP Historic District as present within the APE. (See Appendix F: Report Summaries.)

W&A sent a letter (dated January 25, 2016 and emailed on January 26, 2016) conveying the HPR and inviting all consulting parties and agencies to the second consulting party meeting to be held on February 16, 2016. The HPR was sent on CD to Native American Tribes on January 27, 2016. (See Appendix C: Correspondence.)

On February 15, 2016, Link Ludington of the Cornerstone Society provided comments and materials in response to the HPR. (See Appendix C: Correspondence.)

A second consulting party meeting was held February 16, 2016, at the Ivy Tech campus in Madison, Indiana. The purpose of the meeting was to discuss identified historic properties within the project's APE. Consultants noted the project is subject to both Section 106 and 110 of the NHPA. It was explained that in regard to the National Register District, in consultation with staff of the DHPA and the staff of the SHPO, the period of significance for the NRHP district was extended to 1970 (fifty years from the year 2020, which is when the project would likely take place) and Industry and Recreation were added as additional recommended themes. These discussions helped W&A assign Contributing or Non-Contributing status to individual properties within the NRHP. In cases where the NHL and NRHP overlap, the Contributing and Non-Contributing designations established for the NHL are also used for the NRHP with two exceptions: the Service Station at 901 E. Second Street and Hillside Inn at 831 E. Main Street are both considered Contributing to the NRHP, but are not contributing to the NHL. In total, there are 169 Contributing and 52 Non-Contributing resources within the project's APE. There are also three resources that have been demolished since the NHL (or based on 2005 aerial photographs). The APE includes buildings (residences, hotels, service stations, businesses, and religious buildings), structures (culverts, drains, walls), sites (ruins associated with the first Hillside hotel), and objects (stone gate posts, fences). Michele Curran, NPS, stated that the Indiana Historic Sites and Structures Inventory (IHSSI) numbers used in the report should be removed from the discussion of the NHL, since the designations of "Notable" and "Outstanding" do not apply to the NHL. She stated all captions should be removed from the photographs of the NHL. She also stated that Section 110 was not mentioned in the HPR.

As part of the consulting party meeting, an archaeologist provided an update on archaeological resources, noting no reconnaissance had been conducted yet and no report sent to the SHPO. Archeological reconnaissance would begin when the preferred had been identified. Consulting parties were asked to submit comments on the HPR and the preliminary alternatives. (See Appendix D: Consulting Parties.)

The NPS provided comments on the HPR in an email dated February 18, 2016. NPS stated: "The Historic Property Report was well done. I would ask that the IHSSI acronym be explained and that the information from the State of Indiana database be addressed in a section of its own. The

state survey is important and should be discussed and explained in its own right. Language used in the IHSSI should not be used in the section on the National Historic Landmark. Please remove paragraph 3 from page 15 and correct the captions on all photographs." And, additionally, commented: "In the first paragraph, "There are approximately 1700 contributing resources within the NHL and around 200 of those are within the APE for this project. As many as X (number) NHL properties will be directly or indirectly affected by the project." Finally, Curran stated, "All NHL properties that will be affected by the project should be photographed and included in the Historic Property Report. The caption should include the following; Property Name, address or location. Alternatives X, Y, Z, etc. would result in the demolition of the property or an effect on the property." (See Appendix C: Correspondence.)

The SHPO provided comments on February 24, 2016, to the HPR. SHPO agreed with the comments of NPS that the HPR was well done and did not offer any recommendations beyond those presented by NPS. However, SHPO did note, "We think there is some value in retaining, in some fashion, the relative ratings of properties that are used in the Indiana Historic Sites and Structures Inventory (i.e., contributing, notable, and outstanding. Those comparative ratings could become more usual later in the alternatives analysis and in the Section 106 consultation, if, for example, it becomes necessary to take a building but there is a choice of which building to take." (See Appendix C: Correspondence.)

Greg Sekula responded on behalf of Indiana Landmarks to the HPR in a letter dated February 29, 2016. Indiana Landmarks offered "no significant recommended changes to the HPR as presented" but concurred with the comment from NPS "that resources in the National Register and National Historic Landmark districts should be evaluated only under the ratings of 'contributing' and 'non-contributing' and that other rating references identified in the . . . IHSSI . . . should be segregated into a separate section of the document and not co-mingled." Landmarks also agreed with the extension of the period of significance to 1970 for the NRHP district. (See Appendix C: Correspondence.)

An archaeological reconnaissance occurred on May 11, 2016 within the footprint of the undertaking, approximately 5.46 acres. Thirteen archaeological sites were identified as a result of the undertaking. Six of the 13 sites contain historic features or possible intact deposits that may yield information important to the NRHP or the NHL. Two sites (12JE0551 and 12JE0553) were recommended for Phase Ib intensive survey. Site 12JE0549 was recommended for Level III documentation per the Historic American Landscape Survey (HALS) and Sites12JE0552, 12JE0553, 12Je0555, and 12JE0561 were recommended for Level III documentation per the Historic American Engineering Survey (HAER). The report also recommended a firm commitment and special provision in the construction documents to contact INDOT-CRO if historic features are encountered during construction (See Appendix F: Report Summaries.)

On October 19, 2016, W&A sent the Phase Ia Records Check and Reconnaissance Report (approved by INDOT-CRO on October 14) to the SHPO and notified the THPOs who had accepted the invitation to consult, of its availability on the INDOT's IN-SCOPE website. (See Appendix C: Correspondence and Appendix F: Report Summaries.)

On November 18, 2016, the SHPO concurred with the findings of the Phase Ia Records Check and Reconnaissance Report. Two sites will require a Phase Ib "unless they can be avoided by construction activities" and five sites will require additional archival research and photo documentation. "If any prehistoric or historic archaeological artifacts or human remains are uncovered during construction, demolition, or earthmoving activities, state law (Indiana Code 14-21-1-27 and -29 requires that the discovery be reported to the Department of Natural Resources." The letter further reminded that federal and state regulations and statues must be followed.(See Appendix C: Correspondence.)

No further efforts, including consultation, to identify historic archaeological and aboveground resources took place.

3. DESCRIBE AFFECTED HISTORIC PROPERTIES

There are two historic resources within the APE: the Madison NRHP District and the Madison, Indiana NHL District.

Madison NRHP District – The Madison NRHP District contains more than 2,200 resources and was listed in 1973. At the time of the nomination, the Madison NRHP District was recognized for having significance in the areas of Architecture, Commerce, and Transportation. The district is also significant in the areas of Industry and Recreation. The district's period of significance begins in 1806 and extends to 1970, for the purposes of this study.

Madison, Indiana NHL District – The NHL, designated as such in 2006, contains 1,695 Contributing resources and 401 Non-Contributing resources. The NHL is significant under the thematic framework of "Expressing Cultural Values" as Madison "embodies the distinguishing characteristics of nearly all popular architectural styles from the early nineteenth to early twentieth centuries as demonstrated in a small river town." It is also significant under the thematic framework of "Creating Social Institutions and Movements." Specifically: "the community of Madison was integrally involved in the mid-nineteenth century national issues of Abolitionism, the Underground Railroad, and the growth of African-American communities." The period of significance is circa 1817 to circa 1939.

4. DESCRIBE THE UNDERTAKING'S EFFECTS ON HISTORIC PROPERTIES

Project engineers, working with INDOT and FHWA, have identified Alternative 6 as the preferred alternative. The preferred alternative is an "At-Grade" Alignment. US 421 would remain on the existing north-south Harrison Street alignment with a widened intersection and turning radii at Sering/Main Street. Buildings and land between Second and Sering/Main Streets would be acquired so that the new US 421 roadway would n begin the new alignment portion of the undertaking north of the north side of Second Street and it would tie into existing roadway at Sering/Main Street. Second Street, an east-west street would stop at US 421. The intersection of US 421 and Second Street does not currently merit a traffic signal under the design standards but may eventually require one, sometime in the future. The 15- to 20-foot grade change between Second and Sering/Main would require a retaining wall along the north side of US 421. SR 56 would become an access road east of the intersection where US 421 ties in with Sering/Main Street.

The undertaking will adversely affect the Madison NRHP District and the Madison, Indiana, NHL District. (Addresses of individual resources listed below are shown on maps in Appendix A: page A-10.)

Madison NRHP District (1973)
By changing the path and grade of US 421 (which follows a nineteenth century roadway), introducing retaining walls, and creating a cul de sac at SR 56, which also follows a nineteenth century roadway, this alternative has an impact on the "concentration, linkage, or continuity of sites, buildings, structures, or objects united historically or aesthetically by plan or physical development."

The preferred alternative would require the acquisition of 2.18 acres of temporary/permanent right of way (ROW) from the NRHP district. This ROW acquisition would remove the following contributing buildings, structures, objects, or sites:

Address	IHSSI No & Rating/ Other Information	NRHP Status
901 E Second St	Not inventoried	Contributing
106/112 Sering St	Not inventoried	Contributing
Culvert	Site 12JE0561[1]	Contributing
Hotel Ruins Site	Site 12JE0549	Contributing

The preferred alternative would acquire ROW from part of the following parcels within the NRHP district but would not involve the removal of any building, structure, object, or site:

Address	IHSSI No. & Rating	NRHP Status
831 E Main St	Not inventoried	Contributing
902 E Second St	Not inventoried	Contributing
924 Park Ave	077-377-32057 Contributing	Contributing
926 Park Ave	077-377-32058 Contributing	Contributing

In modeling, the preferred alternative (Alternative 6), proved to reduce the noise readings to more of the Contributing resources within the NRHP than did the other alternatives and it improves existing ambient noise levels for much of the district.

Madison, Indiana NHL District (2006)

By changing the grade and path of US 421 (which follows a nineteenth century roadway) and introducing retaining walls and by altering the route of SR 56, which also follows the path of a nineteenth century roadway, this alternative has an impact on the "concentration, linkage, or continuity of sites, buildings, structures, or objects united historically or aesthetically by plan or physical development" of the historic street plan.

The preferred alternative would require the acquisition of 1.53 acres of temporary/permanent ROW from the NHL district. This ROW acquisition would remove the following buildings, structures, objects, or sites that contribute to the NHL:

Address	NHL Status
106/112 Sering St	Contributing
Culvert	Contributing

The preferred alternative would acquire ROW from part of the following parcels within the district but would not involve the removal of any building, structure, object, or site:

Address	NHL Status
904 E Second St	Contributing
924 Park Ave	Contributing
926 Park Ave	Contributing

[1] The Phase Ia Archaeological Records Check and Field Reconnaissance Report (October 2016) assigned Indiana archaeological site numbers to the Culvert and Hotel Ruins Site.

In modeling, the preferred alternative (Alternative 6), proved to reduce the noise readings to more of the Contributing resources within the NHL than did the other alternatives and improves existing ambient noise levels for much of the district. See below for a fuller discussion of noise and noise modeling.

5. EXPLAIN APPLICATION OF CRITERIA OF ADVERSE EFFECT -- INCLUDE CONDITIONS OR FUTURE ACTIONS TO AVOID, MINIMIZE OR MITIGATE ADVERSE EFFECTS

36 CFR § 800.5(a)(1) states: "An adverse effect is found when an undertaking may alter, directly or indirectly, any of the characteristics of a historic property that qualify the property for inclusion in the National Register in a manner that would diminish the integrity of the property's location, design, setting, materials, workmanship, feeling, or association. Consideration shall be given to all qualifying characteristics of a historic property, including those that may have been identified subsequent to the original evaluation of the property's eligibility for the National Register. Adverse effects may include reasonably foreseeable effects caused by the undertaking that may occur later in time, be farther removed in distance or be cumulative."

Madison National Register Historic District (1973)
Per 36 CFR 800.5(a)(2)(i), the undertaking will cause "physical destruction of or damage to all or part of the property," in this case the NRHP district.

The alternative would not be consistent with the Secretary's Standards for the Treatment of Historic Properties, and thus would constitute an adverse effect under 36 CFR 800.5(a)(2)(ii).

Per 36 CFR 800.5(a)(2)(iii), four Contributing resources within the District will be removed from their historic location: 901 East Second Street, 106/112 Sering Street, Historic Culvert, and Hotel Ruins Site. In addition, five Contributing properties will be directly impacted through ROW acquisition. (See Appendix A: Maps, page A-10, showing location of resource by street address.)

The damage to individual Contributing resources constitutes a small portion of the NRHP district, but the criteria set forth in 36 CFR 800.5(a)(2)(i) through (iii) apply; hence, these actions will still constitute an Adverse Effect.

Per 36 CFR 800.5(a)(2)(iv), there will be a change "of the character of the property's use or of physical features within the property's setting" since the east side of the district will take on a different feeling and association than in the rest of the district. The preferred alternative will introduce a change at the US 421 connection between Second Street and Main/Sering Street that will constitute an alteration to the NRHP's physical features. The roadway connection and retaining walls would be located on the east side of the district, where the working class homes and Fulton community were located. The construction of the at-grade roadway with retaining walls will diminish the integrity of that portion of the NRHP district. However, due to the immense size of the district, it will still remain NRHP eligible as a whole.

Per 36 CFR 800.5(a)(2)(v), there will be an "introduction of visual, atmospheric or audible elements that diminish the integrity of the property's significant historic features."

Vibration from construction will pose a threat to nineteenth century buildings.

Three contributing resources within the district will be removed as a result of the undertaking and a new roadway will be constructed.

Overall, noise levels within the preferred alternative decrease within the district. The preferred alternative would introduce a change in alignment that allows for a freer flow of traffic in the area. By improving travel times, reducing travel delays, and eliminating stop controlled intersections, vehicular traffic will neither come to a complete stop, nor accelerate from a stop condition, both of

which contribute significantly to vehicular noise generation. Additionally, the preferred alternative would redirect a significant amount of traffic away from the residential areas along Baltimore Street and Second Street, between Baltimore Street and Harrison Street, reducing noise levels through a large portion of the existing alignment.

The *INDOT Traffic Noise Analysis Procedure* states that highway noise impacts occur if either of two conditions is met: 1) the predicted Leq(h) levels "approach" or "exceed" the appropriate noise abatement criteria for the land use identified, or 2) the predicted highway Leq(h) noise levels substantially exceed the existing noise level. "Approach or exceed" is defined as levels that are within 1 decible (dBA) Leq(h) of the appropriate Noise Abatement Criteria (NAC) or higher. The NAC for Category B land use (residential properties) is 67 dBA. Accordingly, 66 A-weighted decibels (dBA) is the level at which highway noise impacts occur. "Substantially exceed" means predicted traffic noise levels exceed existing noise levels by 15 dBA or more. If the existing ambient noise level currently approaches or exceeds the criteria, then predicted increases are not considered effects unless there is an increase of 15 dBA. Existing, and design year 2040, sound levels were determined using sound level meters and/or FHWA TNM 2.5 modeling, as applicable. Informational note: sound levels are added logarithmically and not linearly. As a result, it would take a subsequent "doubling" of present traffic volumes to increase the predicted noise levels by 3 dBA; a 3 dBA increase is perceptible to the human ear.

Modeling indicates that two Contributing properties (located at 61 East Main and 718 East Main) and one Non-Contributing property (located at 617 East Main), as noted on mapping in Appendix A, would experience noise increases that meet or exceed the 66 dBA, as a result of the undertaking under the preferred alternative. None of these resources will experience "a substantial increase" of 15 dBA or greater. Modeling indicates that twenty-two of the 129 receptors presently experience noise levels that meet or exceed 66 dBA. Of the 129 receptors placed within the district, 81.4 percent of them experienced some reduction in noise over ambient with the preferred alternative. Of these, more than 44.2 percent will experience a 5 percent reduction in noise and 20.2 percent will experience a 10 percent reduction in noise. Two resources that contribute to the NRHP will experience noise levels that meet or exceed 66 dBA. These readings are considered a noise impact per INDOT's noise policy.

Per 36 CFR 800.5(a)(2)(vi), there will be no neglect or deterioration of the property.

Per 36 CFR 800.5(a)(2)(vii), there will be no "transfer, lease, or sale of the property out of Federal ownership or control."

Madison, Indiana NHL District (2006):
Per 36 CFR 800.5(a)(2)(i), the undertaking will cause "physical destruction of or damage to all or part of the property," in this case the NHL, and per 36 CFR 800.5(a)(2)(iii), two resources within the NHL will be removed from their historic location: 106/112 Sering Street and the Culvert. In addition, three will be indirectly impacted through ROW acquisition.

The alternative would not be consistent with the Secretary's Standards for the Treatment of Historic Properties, and thus would constitute an adverse effect under 36 CFR 800.5(a)(2)(ii).

This alternative directly affects five individual resources, representing less than one percent of the Contributing resources within the NHL. The criteria set forth in 36 CFR 800.5(a)(2)(i) through (iii) apply; hence, these actions will still constitute an Adverse Effect.

Per 36 CFR 800.5(a)(2)(iv), there will be a change "of the character of the property's use or of physical features within the property's setting." The preferred alternative would introduce a change to the NHL's physical features where the new US 421 would connect with existing streets between Second Street and Main/Sering Street. The introduction of the roadway connection and retaining walls would occur on the east side of the NHL, where the working class homes and

Fulton community are located. The construction of the at-grade roadway with retaining walls will diminish the integrity of that portion of the NHL. However, due to the immense size of the NHL, it will remain eligible as a whole.

Per 36 CFR 800.5(a)(2)(v), there will be an "introduction of visual, atmospheric or audible elements that diminish the integrity of the property's significant historic features."

Vibration from construction will pose a threat to nineteenth century buildings.

Two contributing structures within the district will be removed as a result of the undertaking and a new roadway will be constructed.

Overall, with the preferred alternative, noise levels decrease within the district.

Modeling indicates that two Contributing properties (located at 61 East Main and 718 East Main) and one Non-Contributing property (located at 617 East Main)--locations are indicated on mapping in Appendix A-- would experience noise increases that meet or exceed the 66 dBA as a result of the undertaking under the preferred alternative. None of these resources will experience "a substantial increase" of 15 dBA or greater. Of the 123 receptors placed within the district, 82.1 percent of them experienced some reduction in noise over ambient with the preferred alternative. Of these, more than 45.5 percent will experience a 5 percent reduction in noise and 21.1 percent will experience a 10 percent reduction in noise. Two resources that contribute to the NHL would experience noise levels that meet or exceed 66 dBA. These readings are considered a noise impact per INDOT's noise policy.
Per 36 CFR 800.5(a)(2)(vi), there will be no neglect or deterioration of the property.

Per 36 CFR 800.5(a)(2)(vii), there will be no "transfer, lease, or sale of the property out of Federal ownership or control."

EFFORTS TO AVOID, MINIMIZE, AND MITIGATE ADVERSE EFFECTS

The following are efforts to avoid, minimize, and mitigate adverse effects in regard to Section 106 and Section 110 of the National Historic Preservation Act (NHPA).

Section 110: The project team took into account Section 110 of the NHPA in project planning. They recognized that there are ***Special Requirements for protecting National Historic Landmarks*** and that Section 110(f) of the NHPA requires: "Prior to the approval of any Federal undertaking which may directly and adversely affect any National Historic Landmark, the head of the responsible Federal agency shall, to the maximum extent possible, undertake such planning and actions as may be necessary to minimize harm to such landmark, and shall afford the Advisory Council on Historic Preservation a reasonable opportunity to comment on the undertaking."[2] Pursuant to 36 CFR § 800.10, Section 106 consultation involving National Historic Landmarks requires this special consideration; therefore, historians used the "process set forth in §§ 800.6 through 800.7 and [gave] special consideration to protecting [NHLs] as specified."

Pursuant to 36 CFR § 800.10(b), the Advisory Council on Historic Preservation was contacted and invited to participate given the potential for adverse effect.

Pursuant to 36 CFR § 800.10(c), the Secretary of the Interior was invited to join consultation through the National Park Service representative.

[2] National Historic Preservation Act of 1966 (as amended through 1992), Section 110(f), accessed March 7, 2016, http://www.nps.gov/history/local-law/nhpa1966.htm

Noise avoidance: Project engineers conducted noise modeling to inform which alternative would have the least noise impact and if those noise impacts would warrant noise barriers (See Appendix C: Correspondence.)

The FHWA Traffic Noise Model (TNM) Version 2.5 was used to model proposed noise levels. Nine existing (ambient) noise level measurements were recorded within a study area that roughly corresponded with the APE for the US 421 project. Five of the nine ambient levels approached (within 1 dBA) of 67 dBA (or 66 dBA). Modeled in dBA, existing noise levels in the corridor range from 45.8 dBA Leq(h) to 72.4 dBA Leq(h). An evaluation of the Future No-Build scenarios resulted in the identification of nine NAC areas. The predicted design year (2040) modeled traffic-generated noise levels for the three alternatives that range from 47.5 dBA Leq(h) to 69.9 dBA Leq(h).

Existing Twenty-two receptors approach or exceed the NAC for residential properties and are therefore considered impacted at the present time.

Preferred Alternative 6: Three receptors approach or exceed the NAC for Category B and are therefore considered impacted due to an increase in traffic volumes and relocation of US 421. None of the receptors will experience a substantial increase of 15 dBA or greater.

Alternative 4: Seven receptors approach or exceed the NAC for Category B and are therefore considered impacted due to an increase in traffic volumes and relocation of US 421. None of the receptors will experience a substantial increase of 15 dBA or greater.

Alternative 8: Thirteen receptors approach or exceed the NAC for Category B and are therefore considered impacted due to an increase in traffic volumes and relocation of US 421. None of the receptors will experience a substantial increase of 15 dBA or greater.

Based on the INDOT Traffic Noise Analysis Procedure, the feasibility and reasonableness of a noise barrier was not evaluated because the access driveways to the impacted receptors would not allow for an uninterrupted barrier. The INDOT Traffic Noise Analysis Procedure states that *"…noise barriers require long, uninterrupted segments of barrier to be feasible. As such, if there are existing access points and/or driveways, it is not feasible to construct effective noise barriers for the roadway.*" From a Section 106 standpoint, noise barriers often present a visual intrusion to a historic property.

Based on the studies thus far accomplished, INDOT has not identified any locations where noise abatement is likely. Noise abatement at these locations is based upon preliminary design costs and design criteria. Noise abatement has not been found to be feasible based on existing access points and/or driveways. A reevaluation of the noise analysis will occur during final design. If during final design it has been determined that conditions have changed such that noise abatement is feasible and reasonable, the abatement measures might be provided. The final decision on the installation of any abatement measure(s) will be made upon the completion of the project's final design and the public involvement processes. However, it is important to note that the preferred alternative (Alternative 6) reduces noise impacts in both districts.

Consultation with officials of jurisdiction (NPS, ACHP, and SHPO) as well as with consulting parties resulted in the conclusion that Alternative 6 has the least harm in terms of the impact to the districts as a whole; the at-grade alignment with a retaining wall does not bisect either the NRHP or the NHL to the extent that the bridge would. In addition, pedestrian connectivity is maintained, which further maintains "concentration, linkage, or continuity of sites, buildings, structures, or objects united historically or aesthetically by plan or physical development" of both districts. On August 19, 2016, SHPO agreed that Alternatives 4 and 6 would cause adverse effects but that Alternative 6 "is less likely to have as severe an overall impact on the Madison [NHL] District or Madison [NRHP] District." On September 8, 2016, NPS stated: "the proposed

overpass bridge in Alternative 4 is totally unacceptable. While Alternative 6 is still an adverse effect on the NHL, it is more acceptable than other options." (See Appendix C: Correspondence.)

Consulting Parties Consultation: Discussion of ways to avoid and minimize the adverse effects on the NRHP and NHL districts dominated the discussions at consulting party meetings. At the initial consulting party meeting, W&A concluded the meeting with the following question being posed: are there resources in the two districts that are so important to the community that they should not be impacted? (See Appendix D: Consulting Parties.)

At the consulting party meeting of February 16, 2016, CMT presented a range of alternatives under consideration, which were grouped by four categories: Existing Alignment, Grade-Separated Alignment, At-Grade Alignment, and Alignment Change. Consulting parties traveled in groups to tables where information on each group of alignments was presented by staff of CMT. The alignment presentation included 3D renderings, plans on aerial photographs, and information about properties potentially affected by each alternative. The group reconvened to discuss the alternatives as a group. Those at the meeting expressed concerns over the present US 421 and the impact that it has on individual resources. Impacts include: drainage, noise, vibrations, and a situation that inhibits walkability and the cohesiveness of neighborhoods. Consulting parties expressed a desire for a project that is pedestrian friendly and honors the NHL and the working-class character of the east side of Madison. The entrance from Milton-Madison Bridge as a "gateway" into Madison is important to the community. (See Appendix D: Consulting Parties.)

A consulting party meeting was held on August 11, 2016, and the discussion included the alternatives under consideration and mitigation as well as a guided tour of the APE to review potential impacts associated with each alternative. After lunch, the meeting broke into groups to discuss mitigation options. The emergent themes from these smaller discussions were:

- Landscaping (and removal of billboards—billboards might be a locally governed issue) is important and take into account engineering, drainage, and artistry. Landscaping as gateway. Some called for terracing of retaining walls.
- Signalized intersection (on-demand) for pedestrian and bicycle traffic across Harrison/US 421 is important to offset the loss of connectivity.
- Advisory Team that includes a mix of representatives including artists, and could include some consulting parties that would participate in design discussions. (The MOA would stipulate MOA participants.) Dr. Curran said that the NPS is an automatic reviewer of design plans. FHWA noted we only get to about 30 percent design under NEPA, so it is a good idea to touch base during the design process.
- Avoidance or treatment of the red house on Sering Street (106/112 Sering Street).
- Pedestrian and bicycle access would offset the loss of connectivity with the new road.

At the end of the consulting party meeting held on August 11, 2016, the consulting parties themselves conducted a straw poll regarding their preferred alternative; the majority favored Alternative 6. (See Appendix D: Consulting Parties.)

Based on input from consulting parties, the Memorandum of Agreement (MOA) to mitigate the adverse effects of the project may contain the following stipulations to mitigate adverse effects:

Adverse Effect	MOA Stipulation
Loss of existing character-defining landscape features due to light, sound and air quality issues in NRHP and NHL	INDOT and FHWA shall consider and, where feasible, implement design that best reflects the historic Fabric and incorporates facets of the historic landscape
Loss of existing character-defining resources including landscape features; effects dealing with light, sound and air quality issues in NRHP and NHL	FHWA will convene an Advisory Team to ensure that the Project is designed in a manner that respects the historic qualities, landscapes, historic buildings, and features in the Madison NRHP Historic District and the Madison NHL Historic District. All consulting parties will be invited to participate in an Advisory Team.
Loss of existing resources within the NRHP and NHL	City of Madison will employ a historic preservation officer for a period of two years to seek new funding and assistance for improvements in the NRHP and NHL districts
Archaeological site 12JE 0551 destroyed	If 12JE0551 cannot be avoided by construction, demolition or earthmoving activities, Phase Ib intensive survey
Archaeological site 12JE 0553 destroyed	If 12JE0553 cannot be avoided by construction, demolition or earthmoving activities, Phase Ib intensive survey
Archaeological site 12JE 0549 (hotel ruins) destroyed	Level III documentation per the Historic American Landscape Survey (HALS) if it cannot be avoided by construction, demolition, or earthmoving activities
Sites12JE0552, 12JE0553, 12Je0555, and 12JE0561 (Culvert)	Level III documentation per the Historic American Engineering Survey (HAER) if they cannot be avoided by construction, demolition, or earthmoving activities.
Potential vibration damage to resources that contribute to NRHP or NHL during construction	Vibration monitoring during construction
Potential vibration damage to resources that contribute to NRHP or NHL during Construction	Construction plans required from contractor prior to the beginning of work activities that require blasting or result in vibration

6. SUMMARY OF CONSULTING PARTIES AND PUBLIC VIEWS

Many communications were received during this project regarding consulting meeting logistics or receipt of materials. Those responses are on file with W&A but are not included in this discussion or appendix material.

The following individuals or organizations participated as consulting parties for this project: The following parties responded affirmatively to the invitation to join consultation of October 9, 2015: Camille Fife; Historic Madison, Inc.; Grand Traverse Band of Ottawa and Chippewa Indians, Michigan; Vickie Young; Patrick Cunningham; Peoria Tribe of Indians of Oklahoma; Jefferson County Historical Society; City of Madison Office of Preservation; Cornerstone Society; Indiana Landmarks—Southern Regional Office; Bob Canida; Main Street Program; Tracey Keller; NPS;

Chippewa-Cree Cultural Resources Preservation Department; Peter Woodburn & Wayne Kyle (Woodburn & Kyle Consultants); Steven Thomas (Thomas Family Winery); United Keetoowah Band of Cherokee Indians of Oklahoma (UKB); Miami Tribe of Oklahoma; National Trust for Historic Preservation; ACHP; Jan Vetrhus ; Margaret (Peggy) Vlerebome; Aron and Roxi Burns; Kathie Petkovic; Teri Lu Adler; Harriet (Happy) Smith. Jefferson County Preservation Council declined to participate. SHPO is a designated consulting party. The additional following residents requested consulting party status or attended a consulting party meeting held on August 11, 2016: Bernard Kelly; Darren and Morgan Alexander; Reverend Robert Leach; Rick Grote; Fred and Judy Koehler; Margaret Balough Hillery; Christian and Cynthia Mejean; Robert and Nancy Cheatham; Kathy Griffin; and John Kinman. (See Appendix D: Consulting Parties.)

On October 16, 2015, resident Jan Vetrhus contacted W&A via email. Vetrhus had received an invitation to join consultation on behalf of the Cornerstone Society. Since Vetrhus had stepped down as the president of the Cornerstone Society, she requested individual consulting party status as a resident who lives “in the affected area.” (See Appendix D: Consulting Parties.)

On October 16, 2015, resident Margaret (Peggy) Vlerebome asked to be added to the list of consulting parties. (See Appendix D: Consulting Parties.)

On October 21, 2015, the United Keetoowah Band of Cherokee Indians in Oklahoma (UKB) acknowledged receipt of invitation to join consultation and stated they had not comments or objections “at this time … However, if any human remains are inadvertently discovered, please cease all work and contact us immediately.” The letter also stated, “UKB reserves the right to re-enter consultation at any time on this project.” (See Appendix D: Consulting Parties.)

On October 27, 2015, residents Aron and Roxi Burns contacted FHWA and requested consulting party status. (See Appendix D: Consulting Parties.)

The ACHP responded to the invitation to join consultation via a letter dated November 4, 2015. ACHP declined the invitation to join consultation “at this time,” but noted “if FHWA determines through consultation with the consulting parties that the undertaking will adversely affect historic properties or that the development of a programmatic agreement is necessary, the FHWA must notify the ACHP in accordance with Section 106 of our regulations . . . In addition, FHWA should provide us with the documentation outlined in 36 CFR 800.11(e).” (See Appendix C: Correspondence.)

SHPO responded to the invitation to join consultation on November 4, 2015. SHPO suggested that the mayor of the City of Madison and the Jefferson County Board of Commissioners be invited to joined Section 106 consultation. Both parties were invited to join consultation via letters dated November 4, 2015 and February 2, 2016. (See Appendix C: Correspondence.)

On November 9, 2015, NPS sent an email to W&A instructing them to invite the “National Trust and the National Council on Historic Preservation” to join consultation. W&A replied to the NPS the same day, informing that the National Trust and ACHP had previously been sent invitations to join consultation. The National Trust had not responded to the letter, and the ACHP had declined to participate “at this time.” (See Appendix C: Correspondence.)

On November 10, 2015, NPS asked if FHWA’s preservation officer had responded to the invitation to join consultation and also sent an email to ACHP asking if they would reconsider their response to the invitation to the join consultation. (See Appendix C: Correspondence.)

On November 10, 2015, Kathie Petkovic, owner of the Riverboat Inn and Suites, contacted INDOT and requested consulting party status. W&A provided consulting party information in a letter dated November 13, 2015. (See Appendix C: Correspondence and Appendix D: Consulting Parties.)

The ACHP in an email responded to the NPS inquiry on November 12, 2015, and noted they had not declined the invitation for the project, and that "[w]e expect to be notified when there is more information developed for the alternatives carried forward that would indicate a basis for our involvement, such as potential for impacts to the NHL district or adverse effects to any other historic properties." (See Appendix C: Correspondence.)

On November 12, 2015, NPS contacted INDOT and stated it would be appropriate to "explain the project more clearly and re-invite the ACHP to participate" before the discussion of alternatives was brought forth later in the process. (See Appendix C: Correspondence.)

On November 17, 2015, W&A exchanged emails with Link Ludington, the representative of the Cornerstone Society regarding consulting party status, the meeting scheduled for December 3, 2015, and contact information for the Society. (See Appendix C: Correspondence.)

Also on November 17, 2015, Michele Curran, Ph.D., the representative for NPS stated she would not attend the first consulting party meeting but "would be available to participate via the phone." Curran added, "I will attend later meetings when the alternatives are presented." (See Appendix C: Correspondence.)

On November 19, 2015, a representative for the Chippewa-Cree Tribe contacted FWHA and stated they would be unable to attend the first consulting party meeting but requested to receive meeting minutes or notes "so that we can stay in the loop on this project." (See Appendix C: Correspondence.)

Also on November 19, 2015, John Stacier, the representative for Historic Madison, requested W&A resend the notification of the December 3, 2015, meeting as he had not received it. (See Appendix C: Correspondence.)

On November 23, 2015, resident Teri Lu Adler asked to be registered as a consulting party. Adler stated she planned to attend the December 3, 2015, meeting. W&A provided Adler with the invitation to join consultation on November 23, 2015. (See Appendix C: Correspondence.)

Consulting party Vickie Young contacted W&A on November 24, 2015. Young stated she would be unable to attend the first consulting party meeting, but "I do look forward to a follow-up email and being able to attend a meeting with others in person soon." (See Appendix C: Correspondence.)

On December 2, 2015, Elizabeth Merritt, a representative from the National Trust responded to the invitation to join consultation. Merritt stated, "In light of the potential adverse effects of this project on the National Historic Landmark District in Madison, and our involvement in the Milton-Madison Bridge project, the National Trust would like to participate as a consulting party under Section 106 for the US 421 Approach project." W&A provided meeting information on the same day. (See Appendix C: Correspondence.)

A consulting parties meeting was held December 3, 2015, at the Clifty Falls Inn in Clifty Falls State Park, Madison, Indiana. The meeting discussed the project in general, noting that it was early in the process. The prior study for the Milton-Madison Bridge Project initially included this approach but it was later eliminated from the project. It was noted that the prior study is a few years old and this study is starting with a blank slate. W&A discussed that historic and archaeological studies would occur but noted no reports had yet been produced. It was also explained that the W&A archaeologist had completed a records search of those resources within a one-mile radius and that pending the selection of the preferred alternative, an archaeological field reconnaissance may be necessary. (See Appendix D: Consulting Parties.)

Consulting parties discussed the importance of US 421 as “gateway” into Madison and the current adverse conditions due to truck traffic. The group also discussed and commented on the importance of the area as a cohesive neighborhood or district. Regarding impacts to historic resources, consulting parties said that the NHL could not be impacted. Kelsey Noack Myers, Chippewa-Cree Indians of the Rocky Boy’s Reservation, noted there are tribes with a demonstrated interest in this area prior to the Indian Removal Act. The Ohio River is one example of a resource important to the Chippewa-Cree and others. She asked for more content during consulting party meetings about archaeological resources within the project area. The group also discussed whether the APE should expand or contract based on the alternative. The meeting concluded with a request for consulting parties to identify resources that they felt are so important to the community that they should not be impacted. Camille Fife said that the entire NHL is important as a whole. (See Appendix D: Consulting Parties.)

In summing up the meeting, W&A noted that those at the meeting had expressed concerns over the present US 421 and the impact that it has on individual resources. Impacts include: drainage, noise, vibrations, and a situation that inhibits walkability and the cohesiveness of neighborhoods. The consulting parties expressed a desire for a project that is pedestrian friendly and honors the NHL and the working-class character of the east side of Madison. The entrance is important to the community. (See Appendix C: Correspondence.)

During the meeting, NPS sent an email to the project team and consulting parties discussing Section 110 of the National Historic Preservation Act. (See Appendix C: Correspondence.)

A public information meeting was held later the same day, also at Clifty Falls Inn. At that meeting, attendees shared information with W&A about cultural resources within the APE and Madison, including the presence of an underground culvert beneath Harrison Street and the reported location of a burial ground (possibly Native American) at Ferry Street near Park School. Attendees also shared information on specific resources in the APE and offered suggestions or sources for further research. Harriet (Happy) Smith joined consultation at that meeting. (See Appendix C: Correspondence.)

On December 4, 2015, Happy Smith sent W&A an email providing additional information on the APE. (See Appendix C: Correspondence.)

On December 15, 2015, Jan Vetrhus shared research on the Fulton area history via email. (See Appendix C: Correspondence.)

W&A met with staff of the Survey and Registration team of Indiana Department of Natural Resources-Division of Historic Preservation and Archaeology (IDNR-DHPA) on January 12, 2016, regarding the Madison NRHP Historic District and its partial overlap with the Madison NHL district within the APE. Participants discussed extending the period of significance for the NRHP district, appropriate themes for the extended period of significance to 1970 for the NRHP, and the consideration of contributing and Non-Contributing properties to the NRHP. (See Appendix C: Correspondence.)

A second consulting party meeting was held February 16, 2016, at the Ivy Tech campus in Madison, Indiana. Michele Curran, NPS, stated that the Indiana Historic Sites and Structures Inventory (IHSSI) numbers used in the report should be removed from the discussion of the NHL, since the designations of “Notable” and “Outstanding” do not apply to the NHL. She stated all captions should be removed from the photographs of the NHL. She also stated that Section 110 was not mentioned in the HPR. (See Appendix D: Consulting Parties.)

On February 15, 2016, Link Ludington of the Cornerstone Society provided comments and materials in response to the HPR. (See Appendix C: Correspondence.)

On February 16, 2016, consulting party Greg Sekula (Indiana Landmarks) sent CMT a photograph of a bridge to consider if the bridge option of the investigated alternatives were to move forward. (See Appendix C: Correspondence.)

On February 17, 2016, Elizabeth S. Merritt, of the National Trust for Historic Preservation, referenced electronic communication received as part of the consultation process and asked if "any of the other consulting parties have been dropped from the communication chain, or is it just the National Trust?" Merritt added, "We would appreciate an explanation, and we ask that remedial measures be taken." (Note: W&A responded on February 17, 2016 that a package was mailed to all consulting parties on January 27, 2016, via US Postal Service; the package contained the invitation to the meeting, the call-in number for those who could not attend, and a CD copy of the Historic Property Report. The Trust's package was not returned to the W&A office, W&A offered to schedule a call to answer any questions.) (See Appendix C: Correspondence.)

Also on February 17, 2016, Teri Lu Adler forwarded CMT an email and photograph of a stone arch bridge sent by Jan Vetrhus that showed "appropriate materials" for design of the undertaking. (See Appendix C: Correspondence.)

Michele Curran, National Park Service, provided seven comments on the second consulting party meeting in an email on February 18, 2016. Comments addressed the project name and reference, visual aids, the HPR, and the consultation process. Curran stated, "Correspondence regarding the *US 421 New Road Project in the City of Madison, Jefferson County, Indiana, INDOT DES. No.: 1400918, DHPA No.:18317* should include that official project identification and title. While it is interesting that the project is being presented as 'Project 421 Gateway to Madison' it is not appropriate to use that name in regard to official NHPA or NEPA consultation. The coined title for the project is being more prominently presented than its legal title, and I think it is misleading. It would be more appropriate for the contractor to use its business name as a header on material developed by them than it is to use a slogan-type heading."

Regarding the hand-outs presented at the consulting party meeting, Curran stated "The map-handouts presented at the Section 106 meeting need to be larger. The legend needs to be larger and more clearly and accurately labeled. I recommend a bold, black **X** be used to identify properties that will be demolished and a bold, black ***I*** be used to identify properties that will be affected." In the same letter, Curran commented further on visual representations of the undertaking: "It is important that an artist rendering of the visual appearance of the overpass be developed so that people can see exactly what the overpass would look like in the neighborhood. Dimensions of the overpass should be included in the rendering...height above the street, width across the street, length of the incline and decline....how many feet. The representations presented at the meeting provided information regarding the appearance of the overpass, but not the surrounding neighborhood. I think it is important that a ground level photograph of the neighborhood in the vicinity of the proposed overpass be used and then the rendering of the overpass be inserted onto that photograph. This method would provide a much more accurate visual aid to the consultants and to the public."

Regarding Section 110, Curran stated, "I would like to remind you that **§ Section 110** of the **National Historic Preservation Act** *[16 U.S.C. 470h-2(f) — Federal undertakings affecting National Historic Landmarks]* requires that '(f) Prior to the approval of any Federal undertaking which may directly and adversely affect any National Historic Landmark, the head of the responsible Federal agency shall, to the maximum extent possible, undertake such planning and actions as may be necessary to minimize harm to such landmark, and shall afford the Advisory Council on Historic Preservation a reasonable opportunity to comment on the undertaking.'"

Curran stated, "As presented, all nine alternatives will have an adverse effect on the NHL with the overpass options providing a more significant adverse effect" and also commented on the

consultation process: “It is of concern that the National Trust was not contacted via email about the meeting on February 16? Was the Advisory Council on Historic Preservation (ACHP) FHWA liaison Mary Ann Naber contacted via email? I found it unusual that they were not present at the meeting. Please revise your contact list to ensure that all the consults are notified of meetings. “

Curran further provided comments on the HPR: “The Historic Property Report was well done. I would ask that the IHSSI acronym be explained and that the information from the State of Indiana database be addressed in a section of its own. The state survey is important and should be discussed and explained in its own right. Language used in the IHSSI should not be used in the section on the National Historic Landmark. Please remove paragraph 3 from page 15 and correct the captions on all photographs.” And, additionally, commented: “In the first paragraph, ‘There are approximately 1700 contributing resources within the NHL and around 200 of those are within the APE for this project. As many as X (number) NHL properties will be directly or indirectly affected by the project.’ Finally, Curran stated, “All NHL properties that will be affected by the project should be photographed and included in the Historic Property Report. The caption should include the following; Property Name, address or location. Alternatives X, Y, Z, etc. would result in the demolition of the property or an effect on the property.” (See Appendix C: Correspondence.)

The SHPO provided comments on February 24, 2016, to the HPR and consulting parties meeting. SHPO agreed with the comments of NPS that the HPR was well done and did not offer any recommendations beyond those presented by NPS. However, SHPO did note, “We think there is some value in retaining, in some fashion, the relative ratings of properties that are used in the Indiana Historic Sites and Structures Inventory (i.e., contributing, notable, and outstanding.” Those comparative ratings could become more usual later in the alternatives analysis and in the Section 106 consultation, if, for example, it becomes necessary to take a building but there is a choice of which building to take.” (See Appendix C: Correspondence.)

SHPO further noted that “[a]voidance and minimization of adverse effects on the [NHL] must certainly be given appropriate consideration.” The SHPO noted that the “concerns and wishes” of consulting parties should also be carefully considered. For that reason, SHPO declined to express strong preferences for any of the alternatives but elected to “Offer some thoughts about possible adverse effects and about various ways to minimize them.”

SHPO stated, “Although the format was novel to my staff, the February 16 consulting party meeting was productive, in that it elicited many insightful comments and suggestions, especially from local consulting parties. My staff thinks, as many of the other consulting parties had commented, that more detail about the kinds of effects that would occur to various properties that contribute to the National Historic Landmark ("NHL") district or the National Register of Historic Places ("NRHP") district would be necessary before many of the current alternatives could be eliminated. There probably will be numerous contributing properties that will be affected visually by many of the alternatives. However, it seems to us that it would be most valuable to know which contributing properties would have to be taken, or that would have to lose part of their yard or grounds, for each of the alternatives.”

In addition, SHPO added, “It is our impression at this time that Alternative 1 (No build) is probably the only alternative under consideration that would not introduce any new adverse effects or intensified adverse effects in comparison to US 421's current effects, of which local consulting parties had complained in the initial consulting parties meeting on December 3, 2015. However, it does not seem likely that the *status quo,* represented by Alternative 1, would be a satisfactory outcome for many, if any, of the local consulting parties. We realize, however, that for comparison purposes, Alternative 1 will be retained throughout the review process, until a preferred alternative is selected.”

Regarding the other alternatives, SHPO noted, “it appears to us that only Alternative 3 (Reroute along 2nd Street) could possibly be constructed without causing a physical impact to any of the buildings (or their yards) that contribute to either the NHL district or the NRHP district. However, as it is currently envisioned, Alternative 3 would require vehicles to come to a stop at each of the intersections along the stretch of 2nd Street on which it would be routed, which likely would result in an increase in the amount of noise and vibration produced by accelerating and decelerating trucks within the NHL and NRHP districts over that which currently is produced. Substituting synchronized, three-color traffic signals at those intersections might reduce the noise from acceleration and deceleration, but it probably would put US 421 truck traffic on 2nd Street in close proximity to even more historic buildings than does the current US 421 alignment, which includes the much wider Main Street for part of its route through the districts. Thus, the effects of traffic noise and vibration might still be greater than those occurring along the current alignment, even if traffic moved through the districts more smoothly than at present.”

With regard to the at-grade alignments, SHPO noted, “Either elevating Harrison Street over 2nd Street (as in alternatives 4, 5, 7, and 9) or running an at-grade Harrison Street between retaining walls and through a cut in the hillside (as in alternatives 6A and 6B) seemed to be more palatable to many of the local consulting parties at the February 16 meeting if the retaining walls of an elevated roadway or retaining walls along a cut were to wear a veneer of local stone. That possibility certainly is worth exploring, as that retaining wall treatment could be quite attractive visually. In our experience with other highway projects, however, we typically have seen form-lined concrete used in such situations, rather than stone, even when stone veneer had been suggested by a consulting party. It is our impression that there could be a significant difference in cost between stone veneer and form-lined concrete. We recommend that the consultants obtain at least rough estimates of the costs of stone veneer and form-lined concrete before the next consulting parties meeting, so that the economic practicality of using stone is known and can be shared and discussed with the consulting parties.”

Regarding grade-separated alternatives, SHPO noted, “On the subject of a grade-separated Harrison Street, my staff heard comments to the effect that elevating Harrison over 2nd Street would create the impression that the parts of the NHL and NRHP districts lying east of the elevated street are visually, if not also physically, cut off from the rest of their districts. In one discussion group, my staff's suggestion of elevating Harrison on a bridge structure, rather than on fill, in order to preserve some sight lines from one side of Harrison to the other, caused even greater concern. At least one local consulting party said it would give the neighborhood too much of an urban feel and would be unattractive. Another expressed concern that such a large and covered, undeveloped area would be inviting to those seeking a dark and secluded place for criminal activities. Those are reasonable concerns. We wonder, however, whether it might still be worthwhile to estimate, at least roughly, how expensive it would be to elevate Harrison Street on a bridge structure with at least modest architectural detailing, in case it proves to be economically imprudent to use stone veneer on retaining walls. That way, a comparison of costs could be shared and discussed, if the idea of form-lined, concrete retaining walls were at that point to strike the consulting parties as less appealing than a bridge structure.”

Finally, SHPO stated, “We understand that no archaeological field work will be performed before a preferred alternative is identified, but we will be glad to review a report on that investigation whenever it becomes available.” (See Appendix C: Correspondence.)

Greg Sekula responded on behalf of Indiana Landmarks to the HPR and consulting parties meeting in a letter dated February 29, 2016. Indiana Landmarks offered “no significant recommended changes to the HPR as presented” but concurred with the comment from NPS “that resources in the National Register and National Historic Landmark districts should be evaluated only under the ratings of ‘contributing’ and ‘non-contributing’ and that other rating references identified in the . . .IHSSI. . .should be segregated into a separate section of the

document and not co-mingled." Landmarks also agreed with the extension of the period of significance to 1970 for the NRHP district. (See Appendix C: Correspondence.)

Landmarks also stated "it would be helpful to quantify the number of contributing and non-contributing resources impacted for each alternative. This should include, in particular, the number of contributing properties/resources that would be demolished under each alternative." Landmarks concurred "with comments expressed by many consulting party participants at the February 16th meeting that the following alternatives, as presented, be eliminated from the project: No Build (Alternative 1), Improved Intersections (Alternative 2), Reroute along 2nd Street (Alternative 3), and Roundabout at SR 56 and Ferry Street (Alternative 8). More detailed information is needed on the remaining alternatives to better assess impacts." (See Appendix C: Correspondence.)

On March 2, 2016, FHWA, INDOT, and project consultants spoke with the ACHP regarding the alternatives and the consulting party meeting held February 16, 2016. The project consultants presented the alternatives discussed at the consulting party meeting and summarized responses received. Following the conference call, the ACHP indicated they would formally participate in consultation on the project and would provide a formal letter. The ACHP wrote accepting consultation for the project in a letter dated March 8, 2016. The letter stated, in part, that, "Our decision to participate in this consultation is based on the *Criteria for Council Involvement in Reviewing Individual Section 106 Cases*, contained within our regulations. The criteria are met because the project will have substantial impacts on important historic properties, and has the potential for presenting procedural problems." (See Appendix C: Correspondence.)

On March 10, 2016, NPS responded to the meeting summary sent the same day by W&A and stated, "Please amend my first comment about removing the IHSSI information from the section on the NHL. Please add that I stated the Indiana Survey is important and should be added and discussed in a section of its own." (See Appendix C: Correspondence.)

Peggy Vlerebome also responded on March 10, 2016 and recommended grammatical/typographical edits to the meeting summary. (See Appendix C: Correspondence.)

On the same day Joe Bunch, the Assistant Chief of the United Keetoowah Band of Cherokee Indians responded and provided updated contact for information for the Tribal Historic Preservation Officer (THPO). (See Appendix C: Correspondence.)

ACHP responded to a project email sent by W&A on May 6, 2016, and stated, "It is really helpful to know that the project is moving along and that there are clear next steps laid out to guide further progress. I appreciate being kept in the loop on the project, as I'm sure others do, and look forward to working with all the consulting parties to develop the best project we can to meet the needs of the community." (See Appendix C: Correspondence.)

On May 6, 2016, Jan Vetrhus sent an email requesting additional information about the project with regards to her property and asked questions regarding the noise and vibration studies. (See Appendix C: Correspondence.)

On May 17, 2016, CMT provided Alternative Exhibits and Alternative Renderings to NPS in response to a request by NPS. (See Appendix C: Correspondence.)

On June 8, 2016, W&A sent a project update to consulting parties and provided a link to the alternatives graphics presented at the Citizen's Advisory Committee (CAC) meeting, which had been slightly revised based on CP comments. W&A noted the graphics were being provided for information purposes only. (See Appendix C: Correspondence.)

On June 9, 2016, the Madison Preservation Planner, Jessica Butler, expressed support for Alternative No. 8, and also stated she would no longer be participating as a consulting party but would be involved in the project where the public is invited. Butler supported Alternative 8 for the following reasons: "1) Pulling the intersection to the east of the Landmark District, therefore causing a less negative impact of detachment (of east-of-bridge properties), 2) Traffic calming (this alternative isn't matched by any other in its safety analysis), 3) Scale (I do not support the alternatives that raise roadway to a grade that is not pedestrian scale), 4) Design opportunity for a true gateway." (See Appendix C: Correspondence.)

On June 9, 2016, NPS stated "it is crucial that the Section 106 consulting parties have the opportunity to meet prior to the determination of a final alternative. We have not had a meeting since the presentation of nine alternatives and it is important that the Section 106 consultation includes further discussion on the final four alternatives." (W&A responded that it was important to discuss the alternatives and that a meeting to do so would take place in early August.) (See Appendix C: Correspondence.)

John Stacier echoed the comments of NPS in an email of June 9, 2016, stating "we need to meet and talk again sooner rather than later." Stacier explained, "It's important to have an in-person dialogue with all the parties about the merits and drawbacks of each of these choices. Consultation it a process, not a one-and-done meeting. I'm frankly surprised we did not have a meeting in conjunction with the recent CAC meeting." (See Appendix C: Correspondence.)

On June 28, an invitation to a consulting party meeting to be held on August 11, 2016 was emailed to all consulting parties along with information on how to access the Effects Memorandum on INDOT's IN-SCOPE website.

In an email dated July 18, 2016, Jan Vetrhus asked questions about the alternatives, the broader environmental process, and other projects in the area. Vetrhus noted, "In addition to the height of the bridge and trucks, the lighting and the height of the retaining wall, has INDOT provided the requested noise and vibration analysis - it's talked about in general terms in this report." Vetrhus also noted, "Drainage is still a problem, as well." W&A responded in an email on July 29, 2016 that specialized studies would be discussed at the next consulting party meeting. (See Appendix C: Correspondence.)

NPS emailed on July 18, 2016, and stated, "It is truly important that the IN DOT team find a way to show the height of the bridge and the additional height of transport trucks on top of the bridge as well as lighting on the bridge. I think it is crucial that that is shown, not just illustrated. I have no sure idea of how to accomplish that illustration….other than the use of balloons or some other obvious visual." W&A responded in an email on July 29, 2016. (See Appendix C: Correspondence.)

On July 29, 2016, Teri Lu Adler stated, "It is also important to show the impact all the way to Main Street. An overpass will affect not only the properties on Second St but all the adjacent ones between Second and Main." (See Appendix C: Correspondence.)

On August 10, 2016, Link Ludington emailed the consulting parties and agencies to state that Alternative 6 had been identified as the "preferred" alternative in the Comprehensive Plan for the City of Madison. (See Appendix C: Correspondence.)

A consulting parties meeting was held on August 11, 2016, in the City Center. The invitation to the consulting party meeting had been sent to all who had previously accepted consulting party status as well as property owners of Contributing resources in the APE. The additional following residents requested consulting party status or attended the meeting: Bernard Kelly; Darren and Morgan Alexander; Reverand Robert Leach; Rick Grote; Fred and Judy Koehler; Margaret

Balough Hillery; Christian and Cynthia Mejean; Robert and Nancy Cheatham; Kathy Griffin; and John Kinman.

The purpose of the day-long consulting party meeting was to discuss the project alternatives, Section 4(f) resources, the status of the effects study and archaeological investigations, and mitigation ideas. The meeting also included a walking tour showing project activities under the alternatives carried forward.

During the meeting the group asked questions about the alternatives, including information about grade changes, signal installation and noise and vibration studies. Following the walking tour, the discussion turned Section 106, Section 110, and Section 4(f). Consulting parties asked if any of the resources would subject to "constructive use." Following a discussion of the alternatives, consulting parties asked about adding limestone to the bridge under Alternative 4, the height of limestone walls under Alternatives 4 and 6, and potential drainage issues. The representative for NPS revisited the discussion of noise increases at fourteen homes under Alternative 4 and requested additional information when the noise analysis was available. It was also noted by another party of that the Fulton community began at the corporation limit lines of Madison and another party asked about the traffic noise associated with a bridge versus on the ground.

The meeting broke into groups to discuss mitigation options. Themes that emerged from these smaller discussions were:

- Landscaping (and removal of billboards—billboards might be local) Landscaping should account for engineering, drainage, and artistry. Landscaping as gateway. Some called for terracing of retaining walls.
- Signalized intersection (on-demand) for pedestrian and bicycle traffic across Harrison/US 421;
- Advisory Team that includes a mix of representatives including artists, and could include some consulting parties. Generally the MOA stipulates MOA participants. Curran said that the NPS is an automatic reviewer of design plans. Allen noted we only get to about 30 percent design under NEPA, so it is a good idea to touch base during the design process
- Avoidance or treatment of the red house on Sering Street (106/112 Sering Street)
- Pedestrian and bicycle access (See Appendix D: Consulting Parties.)

John Stacier thanked W&A for a "good meeting" in an email dated August 11, 2016 and stated, "The presentations went well and the input from the consulting parties I thought to be well informed. I'm pleased we got everything on the agenda covered in the time allotted." (See Appendix C: Correspondence.)

A public open house was held on August 15, 2016 in the City of Madison. At least one attendee stated that Alternative 4 does not fit the character of historic Madison. (See Appendix C: Correspondence.)

On August 19, 2016, SHPO provided comments on the meeting and memorandum of the "Effects of the US 421 New Road Project" (letter dated June 28, 2016). SHPO agreed that Alternatives 4 and 6 would cause adverse effects but that Alternative 6 "is less likely to have as severe an overall impact on the Madison [NHL] District or Madison [NRHP] District."

SHPO stated that the effects memorandum speaks generally to increase or decrease in noise but at the consulting party meeting on August 11, the numbers of properties "that are or would be at or above the 67 dBA that level that FHWA recognizes as mitigable … were stated orally. It would be helpful for the consulting parties to have the [noise] figures in writing."

SHPO also stated that if construction would discourage access east of the Second Street and Harrison/US 421 intersection, then that would be an adverse effect. In addition, eliminating access to on-street parking under Alternative 6 could also cause an adverse effect under Alternative 6, based on the testimony of a local resident. SHPO elaborated, "[a] change in the use or configuration of Second Street that results in a lack or shortage of parking for residents of that block likely would diminish the utility of contributing houses on that street and discourage their continued use." SHPO acknowledged that the archaeology report would be forthcoming. SHPO recommended that the feasibility of moving the main story of the house at 112 Sering Street be examined by an architect or engineer if that house would be acquired. Finally, regarding mitigation, SHPO recommended that this project's mitigation budget "provide generously for appropriate mitigation" as the project "would result in a rather large gash through the historic districts." SHPO continued, "[t]he engineering and construction costs, in any case, will be many times greater than any amount that will be provided for mitigation for this project in Madison, one of Indiana's most historically and architecturally significant communities." (See Appendix C: Correspondence.)

In response to an email sent to all consulting parties on September 2, 2016 requesting formal written comments on effects, NPS provided formal comments on the meeting in an email dated September 8, 2016. NPS stated: "the proposed overpass bridge in Alternative 4 is totally unacceptable. While Alternative 6 is still an adverse effect on the NHL, it is more acceptable than other options. We do insist on stoplights at the intersection for the safety of the local residents and to maintain the walkability of the NHL Historic District. I agree with local residents that a [tasteful] welcome to Madison and the NHL needs to be incorporated into the retaining wall along the Hillside below the hotel. We would like to see the wall terraced in several increments to soften the harsh visual of a tall wall. Materials used to construct the retaining wall need to be sympathetic to historical stone materials used throughout the historic district." (See Appendix C: Correspondence.)

Jan Vetrhus provided formal comments on the project's effects in an email dated September 8, 2016. Vetrhus expressed a preference for Alternative 6 and noted that Alternative 4 "would impose a huge new structure that would cut the neighborhood in half, visually, and add significant walls." In contrast, Alternative 6 could "enhance" the district, "[w]ith the appropriate design and mitigation." Vetrhus stated that the retaining wall under Alternative 6 should be constructed "in such a way to restore the historic landscape that included terraced rock walls. Plantings and natural rock must be used to reduce the noise and provide visual continuity with the historic district. I believe the JCHS made historic photos available. Materials from the remnants of the old stone walls should be re-used as much as possible." Vetrhus also stated "[i]t is. . .very important that a traffic signal is installed at 2nd and Harrison" for pedestrian and bicycle safety. Vetrhus continued, "The choice of the traffic signal should not have overhead wires, but be designed into the neighborhood. That intersection should also be designed to discourage through traffic from turning into the neighborhood." Finally, Vetrhus stated "[t]raffic calming must be built into the design so that through traffic, especially trucks, do not roar onto Main Street at maximum speed. Since Alternative 6 reduces the need to stop, it is essential that traffic is slowed naturally as it enters Main Street. Pedestrian crossings on Main Street need to be safe." (See Appendix C: Correspondence.)

On September 15, 2016, in response to an email from INDOT, NPS provided guidance for the appropriate level of documentation for mitigative purposes under the Historic American Building Survey, Historic American Engineering Record, and Historic American Landscapes Survey. (See Appendix C: Correspondence.)

On November 18, 2016, the SHPO concurred with the findings of the Phase Ia Records Check and Reconnaissance Report. Two sites will require a Phase Ib "unless they can be avoided by construction activities and five sites will require additional archival research and photo documentation. "If any prehistoric or historic archaeological artifacts or human remains are

uncovered during construction, demolition, or earthmoving activities, state law (Indiana Code 14-21-1-27 and -29 requires that the discovery be reported to the Department of Natural Resources." The letter further reminded that federal and state regulations and statues must be followed.(See Appendix C: Correspondence.)

No other comments were received.

A public notice of "Adverse Effect" will be posted in a local newspaper and the public will be afforded thirty (30) days to respond. If appropriate, this document will be revised after the expiration of the public comment period to incorporate any substantive comments received.

APPENDIX

Appendix A: Maps

Appendix B: Plans & Drawings

Appendix C: Correspondence

Appendix D: Consulting Parties

Appendix E: Photographs

Appendix F: Report Summaries

Appendix A: Maps

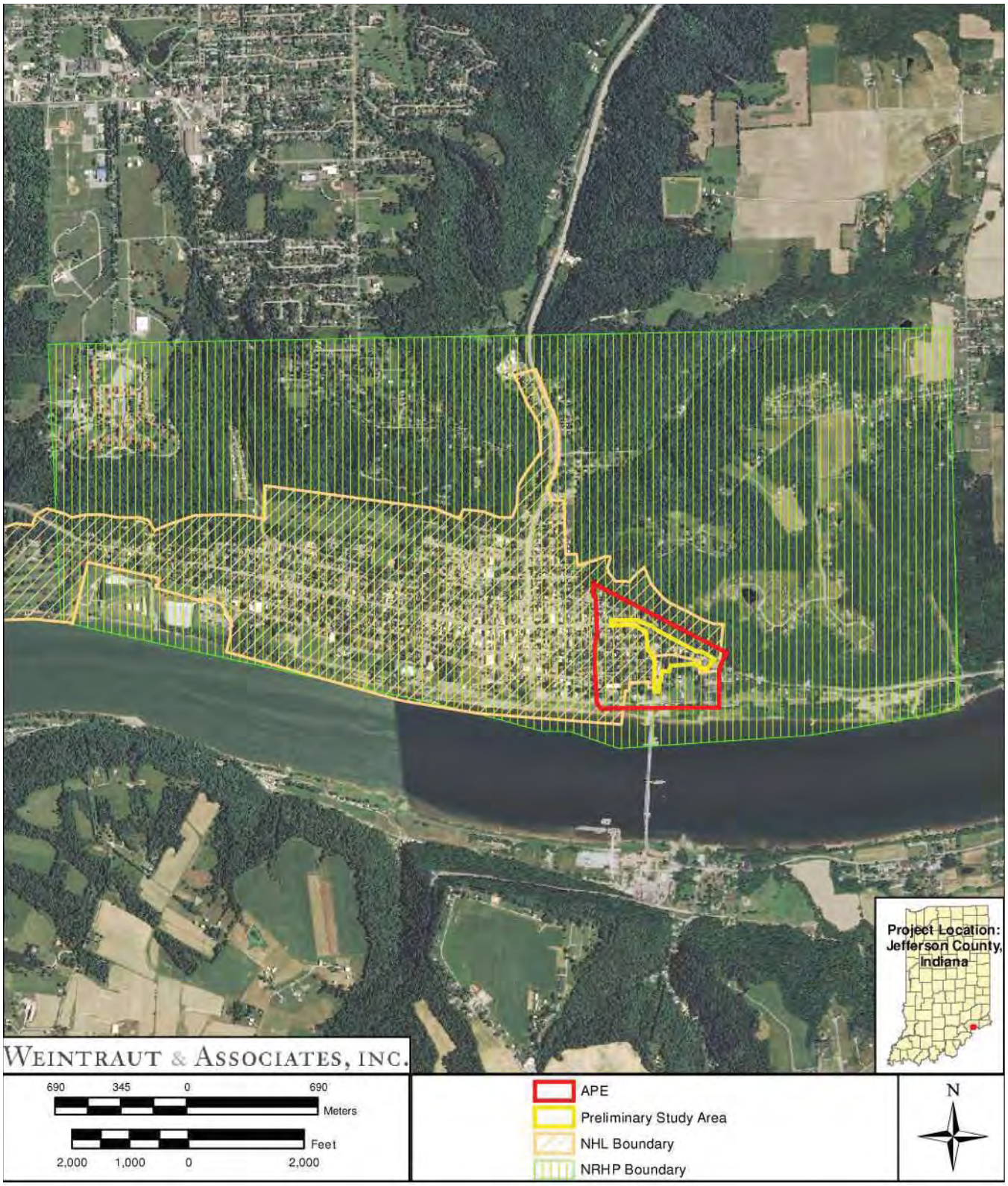

PROJECT LOCATION AND APE AS SHOWN WITHIN THE NRHP AND NHL HISTORIC DISTRICTS ON AN AERIAL PHOTOGRAPH (2012)

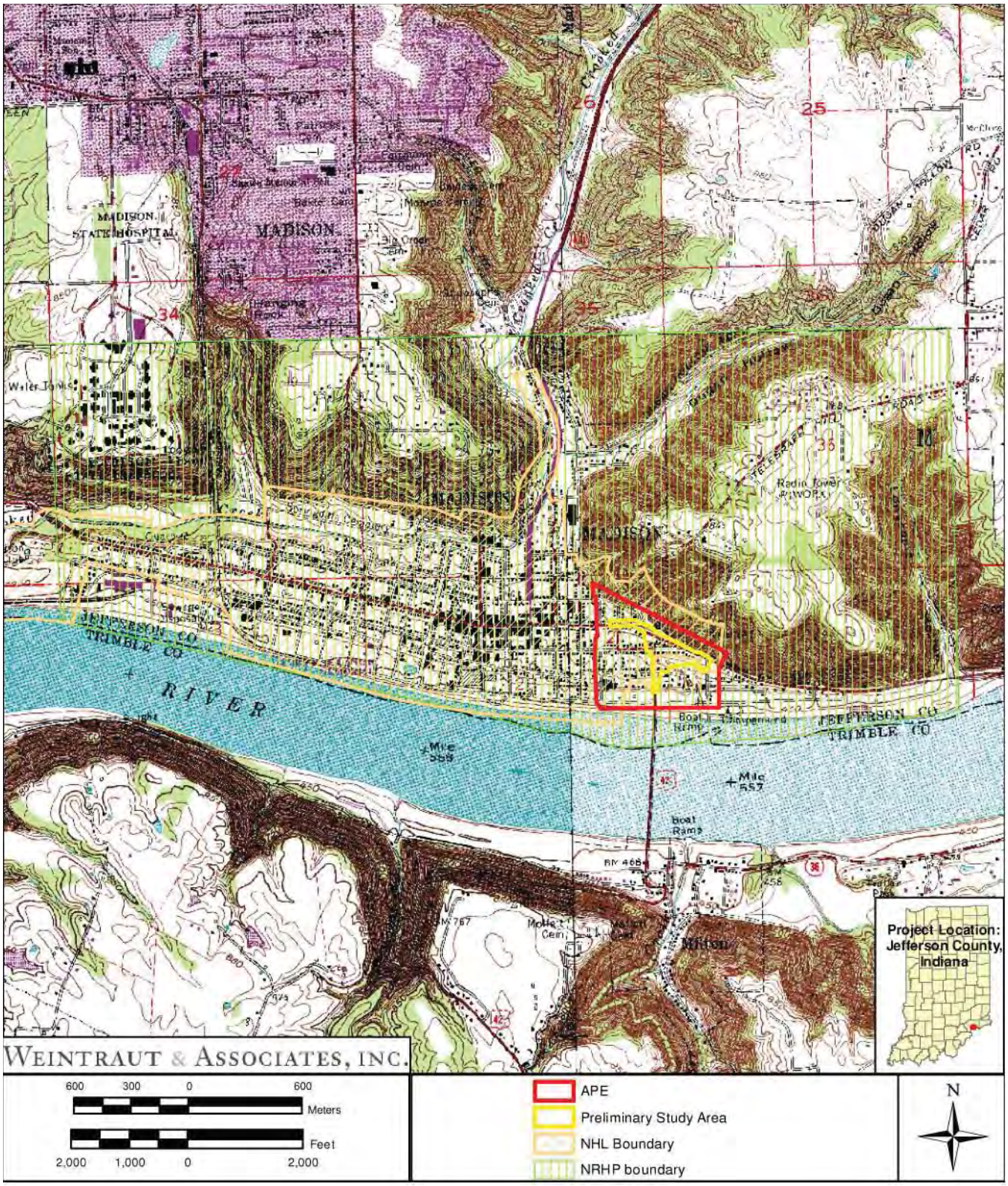

PROJECT LOCATION AND APE AS SHOWN WITHIN THE NRHP AND NHL HISTORIC DISTRICTS ON THE CLIFTY FALLS, CANAAN, MADISON EAST, AND MADISON WEST USGS TOPOGRAPHIC QUADRANGLES 1:24,000)

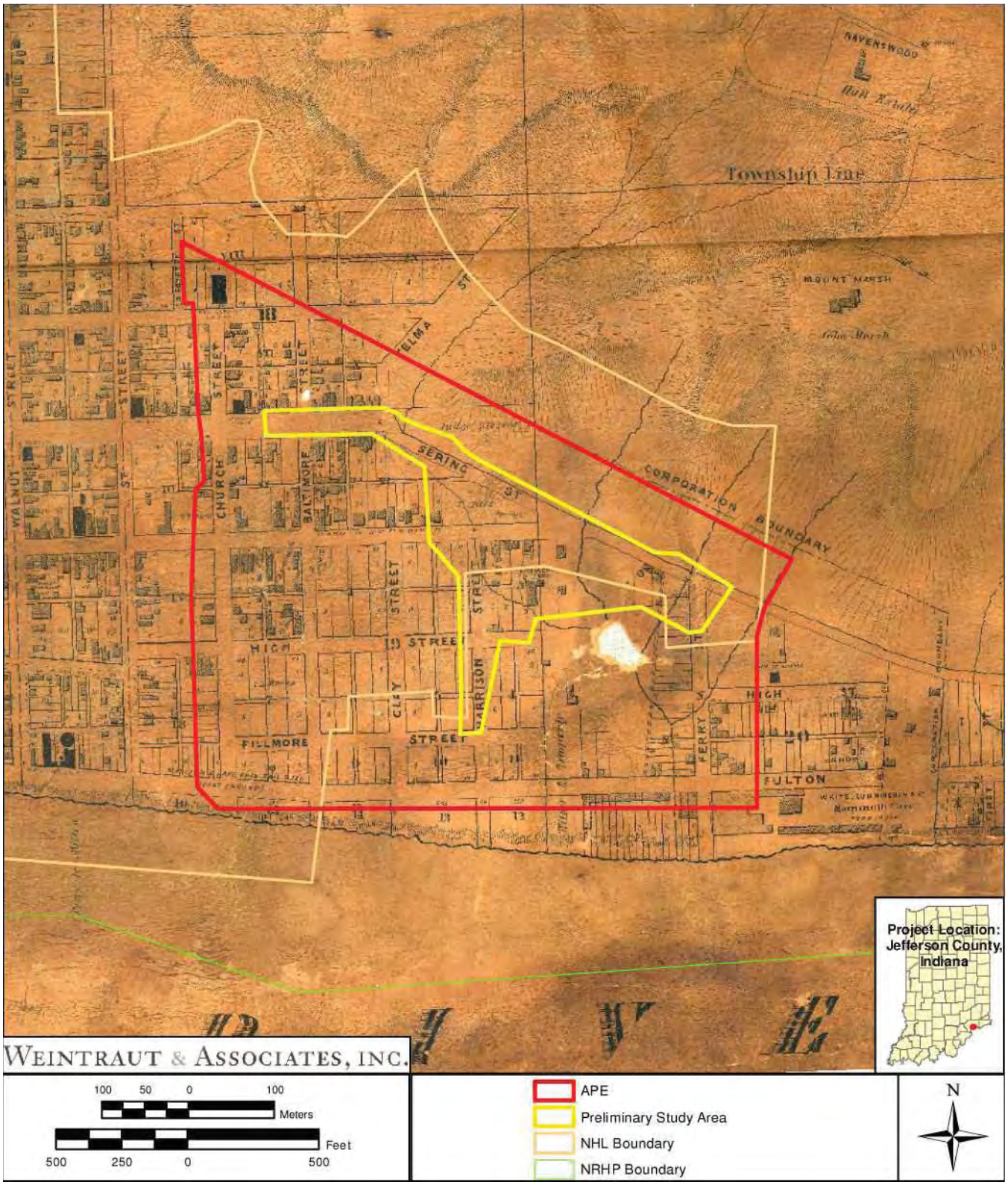

PROJECT LOCATION AND APE AS SHOWN ON HART AND MAPTOTHER'S 1854 MAP OF MADISON (COPY OBTAINED FROM THE JEFFERSON COUNTY HISTORICAL SOCIETY)

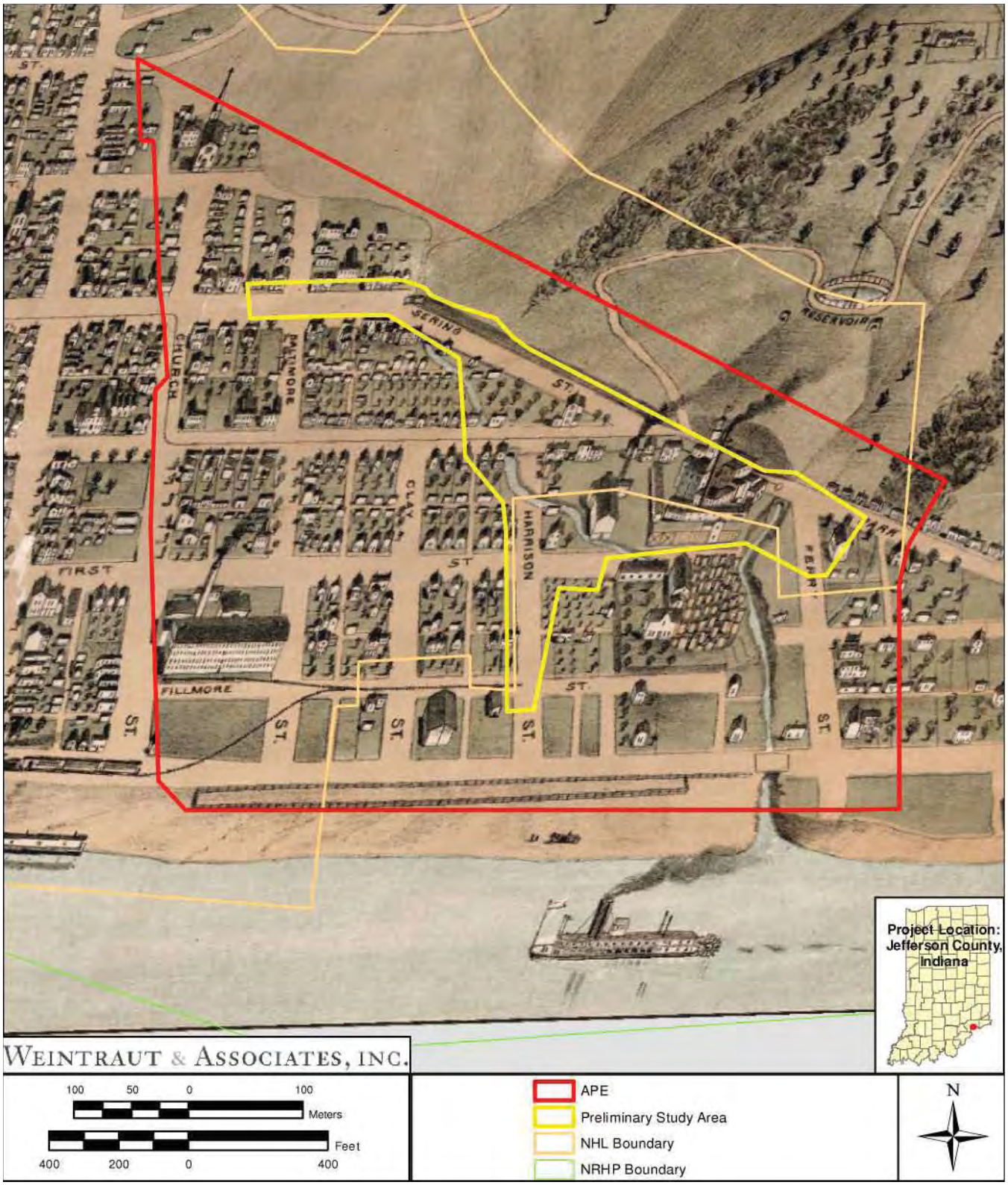

PROJECT LOCATION AND APE AS SHOWN ON J. WALLIS SMITH'S 1887 BIRD'S EYE VIEW MAP OF MADISON (COPY OBTAINED FROM THE INDIANA HISTORICAL SOCIETY)

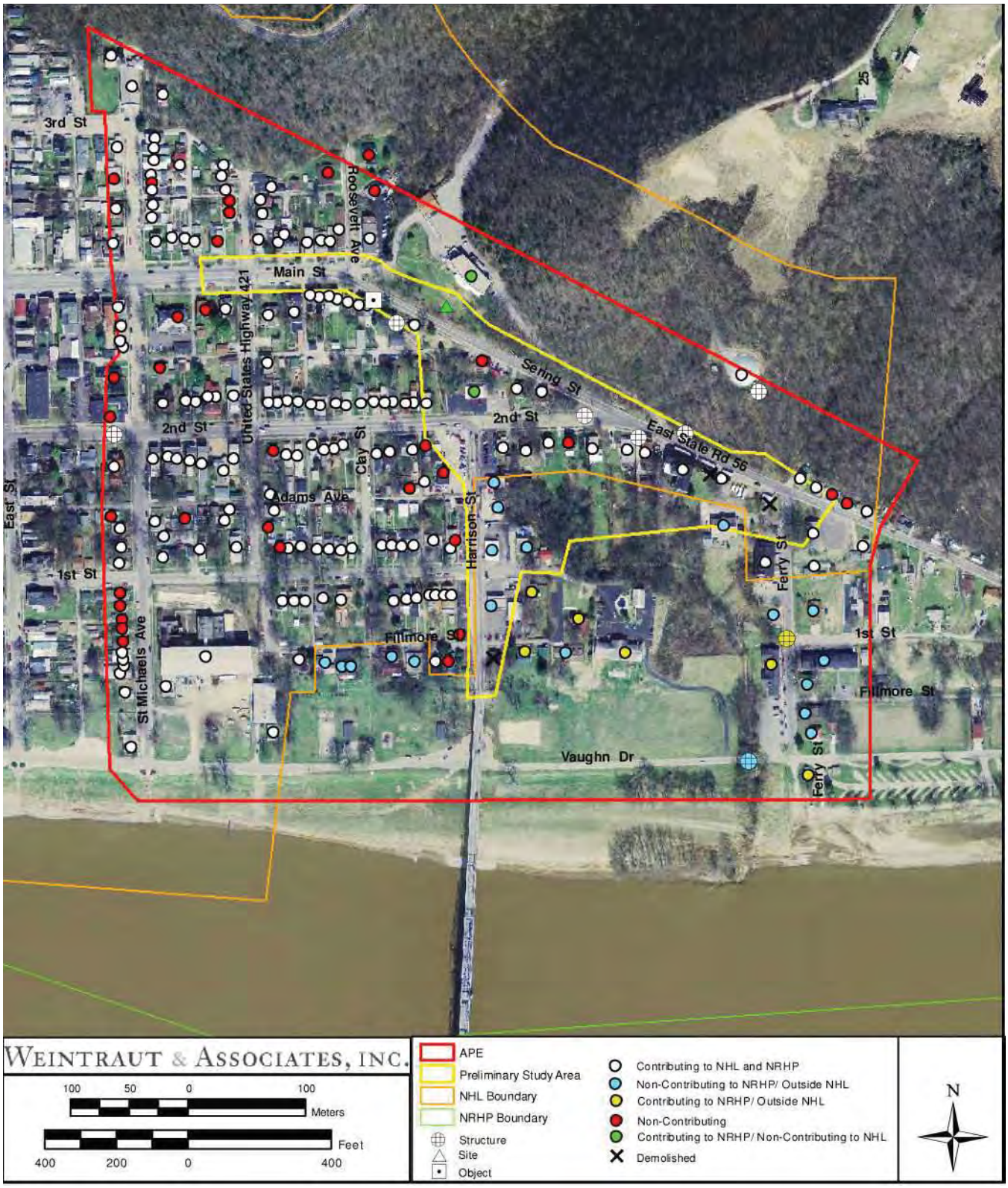

IDENTIFIED AND RECOMMENDED CONTRIBUTING AND NON-CONTRIBUTING PROPERTIES WITHIN THE APE. NOTE THAT APE IS ENTIRELY WITHIN THE NRHP BOUNDARY (2005 AERIAL PHOTOGRAPH).

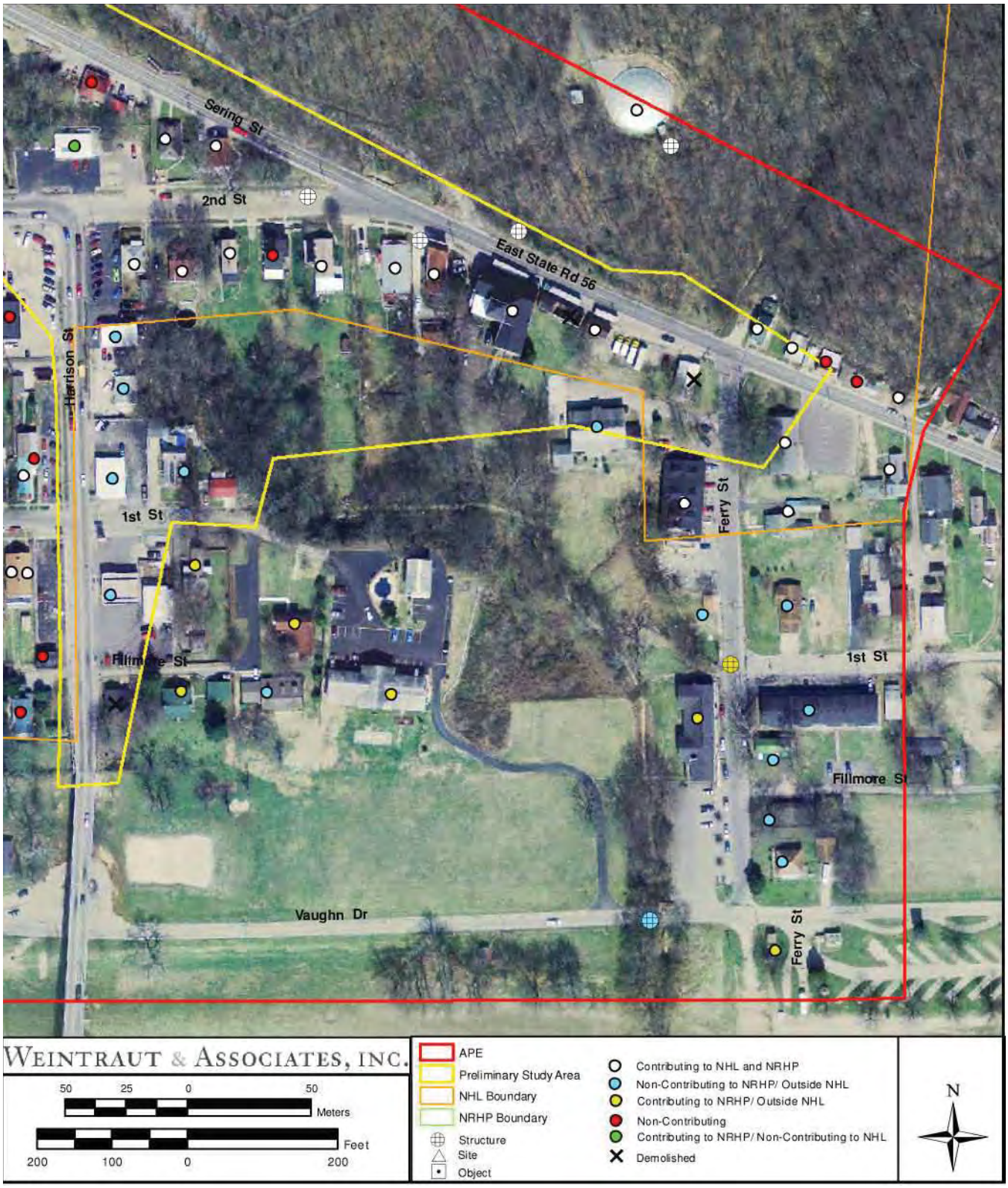

IDENTIFIED AND RECOMMENDED CONTRIBUTING AND NON-CONTRIBUTING PROPERTIES WITHIN THE APE, EAST SIDE AREA DETAIL. NOTE THAT APE IS ENTIRELY WITHIN THE NRHP BOUNDARY (2005 AERIAL PHOTOGRAPH).

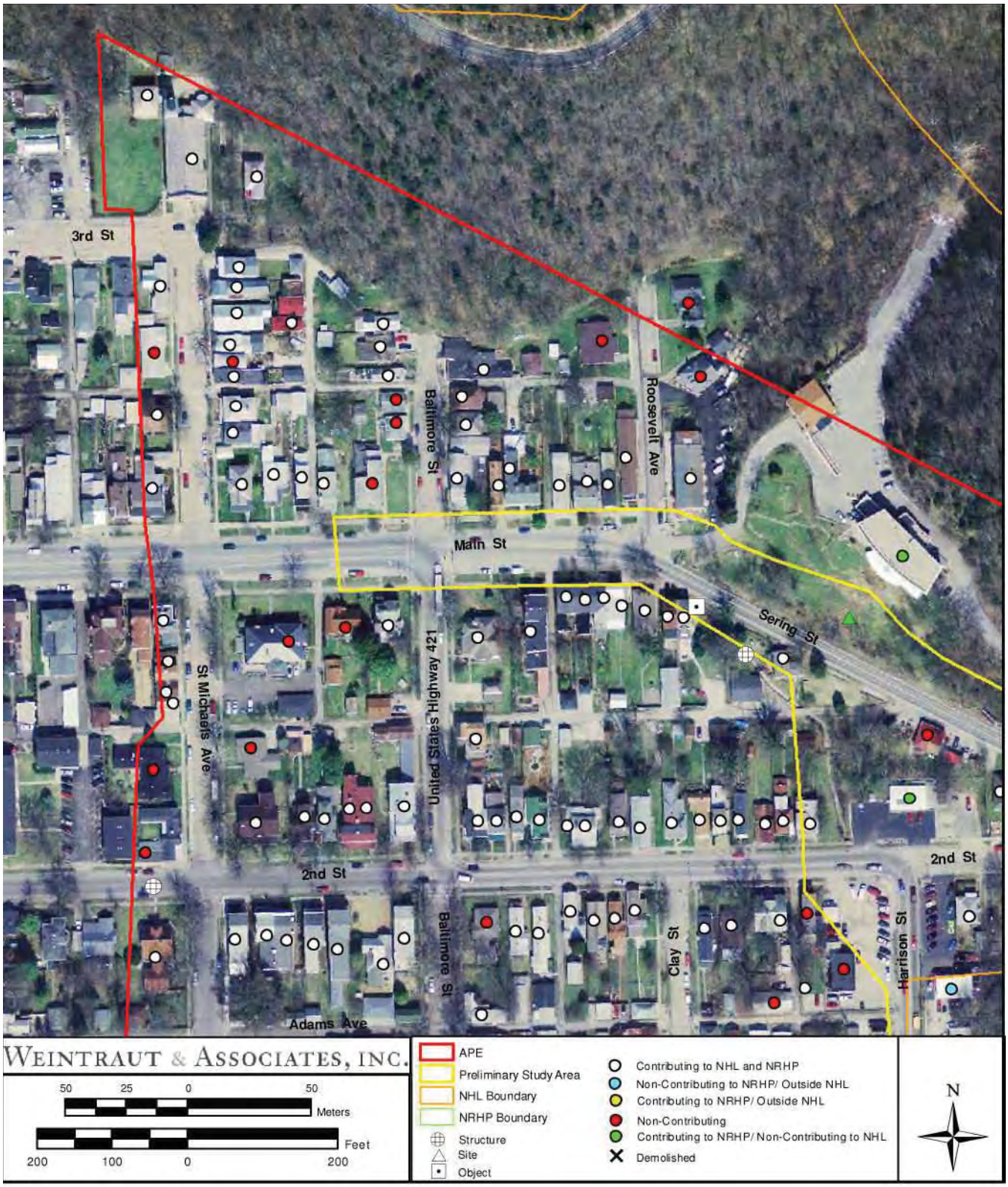

IDENTIFIED AND RECOMMENDED CONTRIBUTING AND NON-CONTRIBUTING PROPERTIES WITHIN THE APE, NORTHWEST AREA DETAIL. NOTE THAT APE IS ENTIRELY WITHIN THE NRHP BOUNDARY (2005 AERIAL PHOTOGRAPH).

IDENTIFIED AND RECOMMENDED CONTRIBUTING AND NON-CONTRIBUTING PROPERTIES WITHIN THE APE, WEST SIDE AREA DETAIL. NOTE THAT APE IS ENTIRELY WITHIN THE NRHP BOUNDARY (2005 AERIAL PHOTOGRAPH).

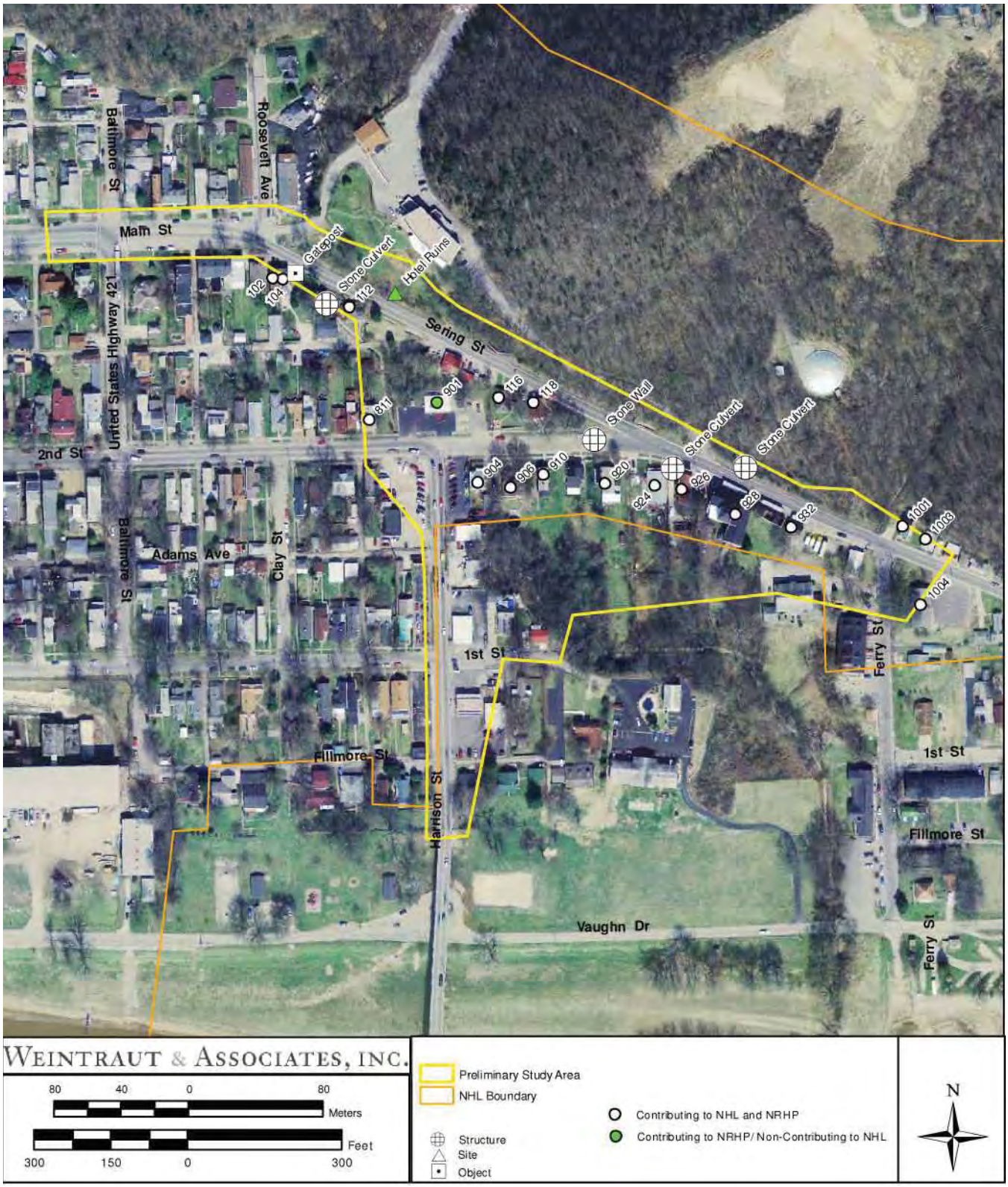

CONTRIBUTING RESOURCES WITHIN THE PRELIMINARY STUDY AREA. RESOURCES ARE IDENTIFIED BY DESCRIPTION OR STREET NUMBER.

Appendix B: Plans & Drawings

PROJECT 421
MADISON, INDIANA
ALTERNATIVE 6

INDOT DES. NO. : 1400918

SCALE = 1" = 100'

LEGEND

- Pavement
- Bridge
- Sidewalk/Path
- Grass
- Retaining Wall
- Construction Limits
- Proposed Right of Way Line
- Contributing to NHL & NRHP
- Non-Contributing to NRHP / Outside NHL
- Contributing to NRHP / Outside NHL
- Non-Contributing to NHL & NRHP
- Contributing to NRHP / Non-Contributing to NHL
- APE
- NHLD Boundary
- Structure
- Site
- Object
- Existing Right of Way Line

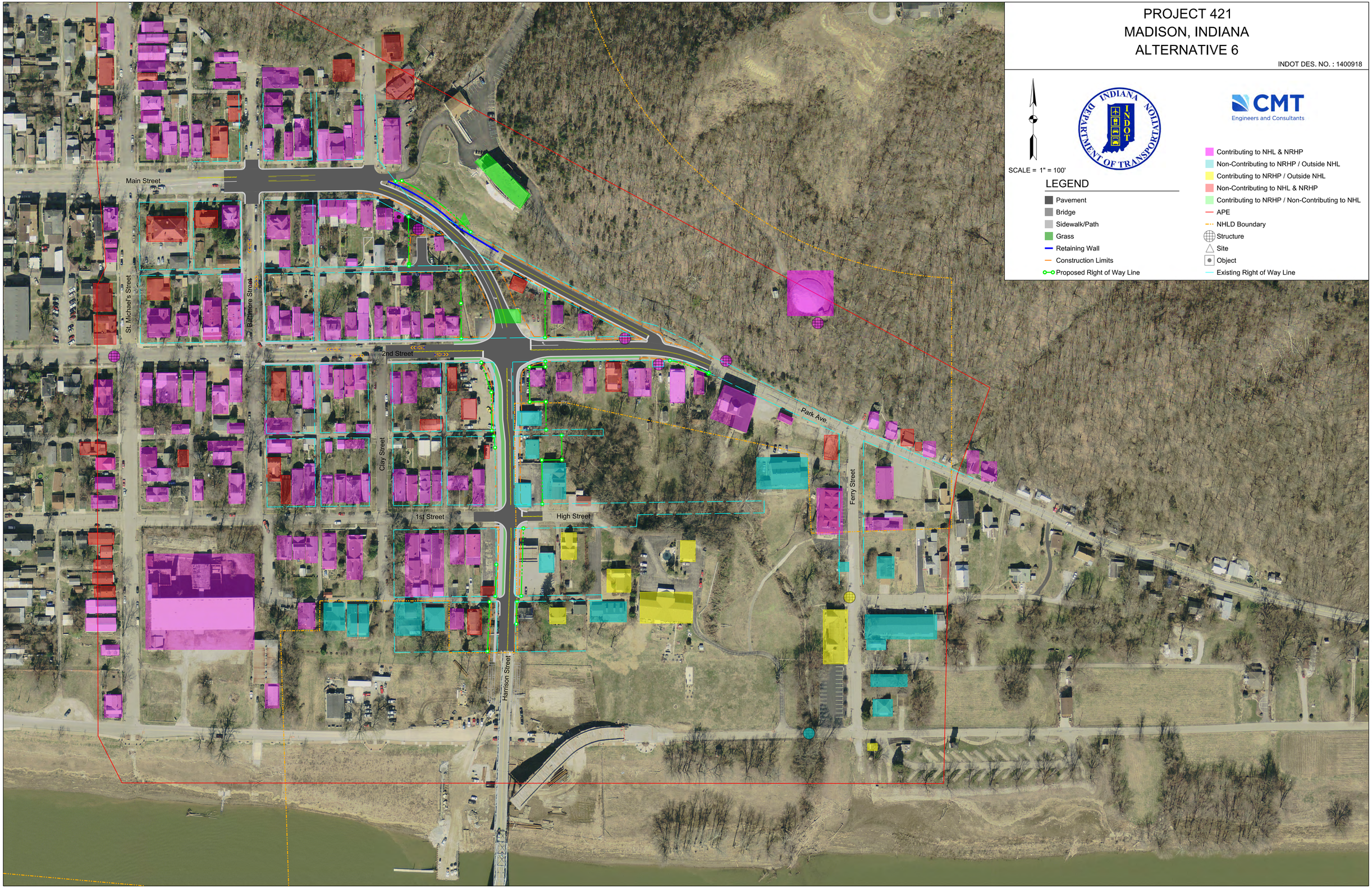

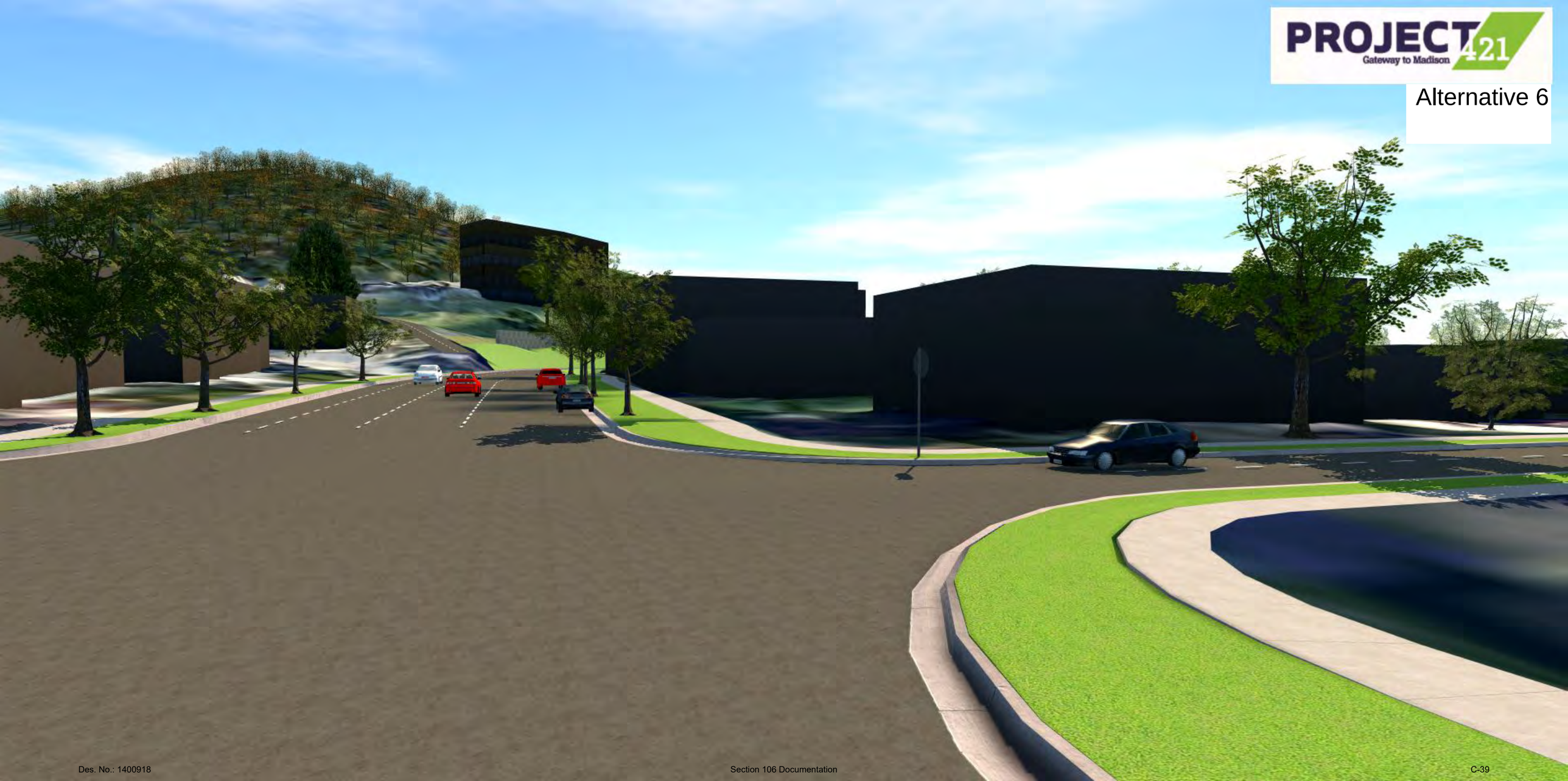
PROJECT 421
Gateway to Madison
Alternative 6

PROJECT 421
Gateway to Madison
Alternative 6

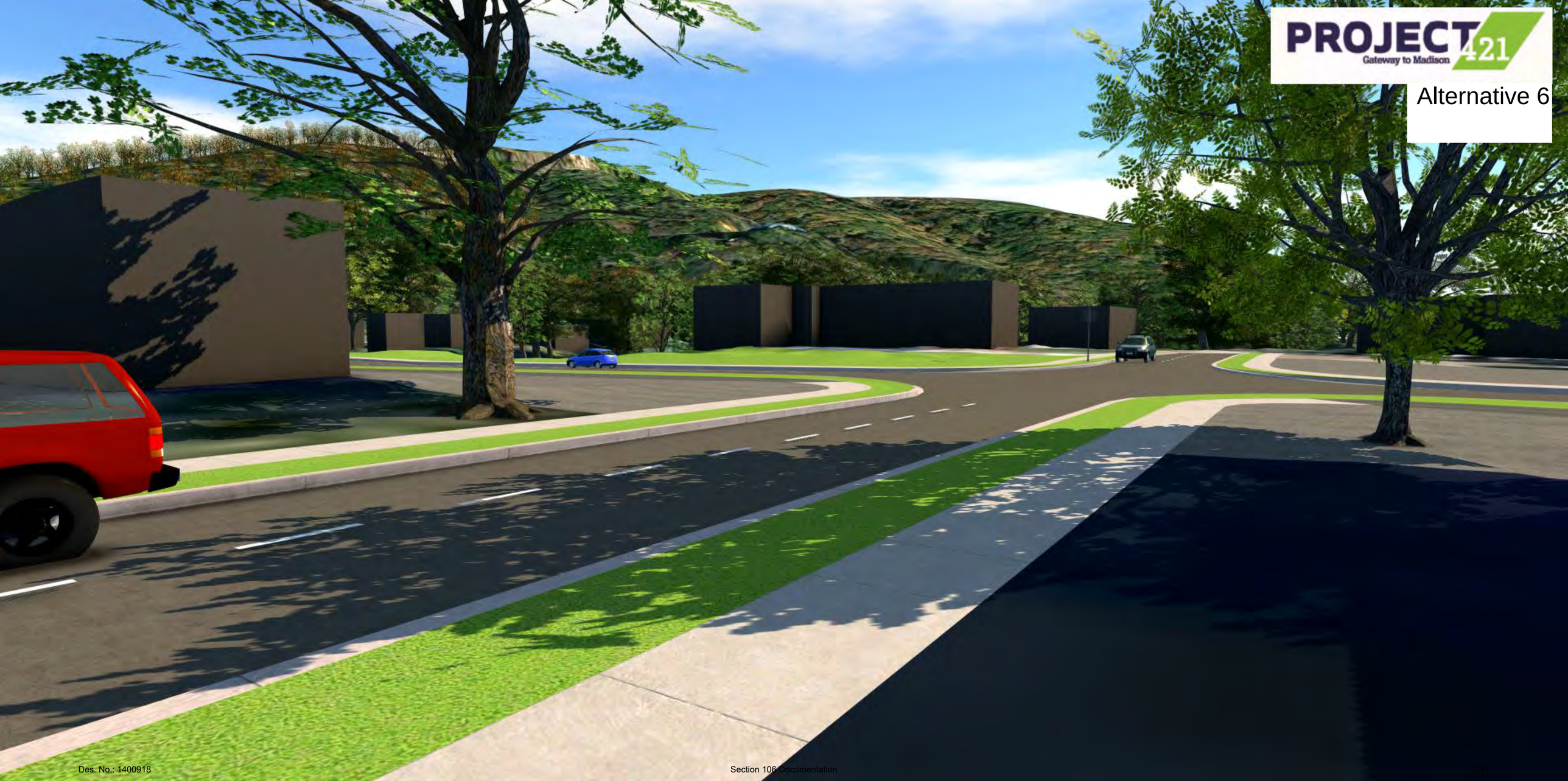
PROJECT 421
Gateway to Madison
Alternative 6

PROJECT 421
Gateway to Madison
Alternative 6

PROJECT 421
Gateway to Madison
Alternative 6
STOP

PROJECT 421
Gateway to Madison
Alternative 6

PROJECT 421
Gateway to Madison
Alternative 6
STOP

PROJECT 421
Gateway to Madison
Alternative 6

PROJECT 421
Gateway to Madison
Alternative 6

PROJECT 421
Gateway to Madison
Alternative 6

PROJECT 421
Gateway to Madison
Alternative 6

PROJECT 421
Gateway to Madison
Alternative 6

Appendix C: Correspondence

INDIANA DEPARTMENT OF TRANSPORTATION

100 North Senate Avenue
Room N642
Indianapolis, Indiana 46204

PHONE: (317) 233-2061
FAX: (317) 232-4929

Michael R. Pence, Governor
Brandye L. Hendrickson, Commissioner

October 5, 2015

Dear Consulting Party:

The Indiana Department of Transportation (INDOT) with funding from the Federal Highway Administration (FHWA) is planning a project in Madison, Jefferson County, Indiana: US 421 New Road Construction (Des. No.: 1400918). Section 106 of the National Historic Preservation Act requires federal agencies to take into account the effects of their undertaking on historic properties (both archaeological and structures).

We are very early in the process: no alternatives have been developed and no reports have been generated. Step one of the Section 106 process initiates consultation.

Pursuant to 36 CFR 800.2(c), you are hereby invited to be a consulting party to participate in efforts to identify historic properties that may be affected by the undertaking, assess the effects of the undertaking on historic properties, and seek ways to avoid, minimize, or mitigate adverse effects on historic properties. Historic Properties are properties that are listed or eligible for listing in the National Register of Historic Places (NRHP). The intent of this letter is to provide you an opportunity to become a consulting party by responding to the invitation via the enclosed post card.

Upon return of the postcard, we will include you as a willing consulting party. Please include your email address on that postcard to facilitate communication.

A guide to the Section 106 process prepared by the Advisory Council on Historic Preservation may be found here: http://www.achp.gov/citizensguide.html.

For questions regarding the Section 106 process, Tribal contacts are Michelle Allen at FHWA at michelle.allen@dot.gov or 317-226-7344 or Patrick A. Carpenter at pacarpenter@indot.in.gov or 317-233-2061; all other comments and questions, please direct to Linda Weintraut, Ph.D. at Linda@weintrautinc.com.

Sincerely,

Patrick Carpenter

Patrick A. Carpenter
Manager, Cultural Resources Office
INDOT Environmental Services

Enclosure
Emc: Michelle Allen, FHWA
Linda Weintraut, Weintraut & Assoc

From: Linda Weintraut [mailto:linda@weintrautinc.com]
Sent: Wednesday, October 07, 2015 4:39 PM
To: Curran, Michele
Cc: Adam Burns; Carpenter, Patrick A; Kennedy, Mary
Subject: US 421 Approach, Madison, Indiana (Des. No.: 1400918)

**** This is an EXTERNAL email. Exercise caution. DO NOT open attachments or click links from unknown senders or unexpected email. ****

Michele,

We are looking forward to talking with you tomorrow. I have attached several items for your reference: 2010 Milton Madison MOA, a list of potential consulting parties for this project (2015), and an invitation to potential consulting parties that will go out tomorrow.

Tomorrow, on our call, we hope to cover the following:

1. *Project Overview and Schedule*
2. *Section 106 overview - where we are in the process*
3. *MOA from Milton-Madison Bridge project*
4. *Historic properties: NRHP & NHL*
6. *Consulting Party Goals and Objectives*
7. *Action Items*

Linda

--

Linda Weintraut, Ph.D.

INDIANA DEPARTMENT OF TRANSPORTATION

100 North Senate Avenue
Room N642
Indianapolis, Indiana 46204

PHONE: (317) 233-2061
FAX: (317) 232-4929

Michael R. Pence, Governor
Brandye L. Hendrickson, Commissioner

October 9, 2015

State Historic Preservation Officer
Attn: Mitch Zoll
Indiana Department of Natural Resources
Division of Historic Preservation and Archaeology
402 W. Washington Street, W274
Indianapolis, IN 46204-2739

Dear Mr. Zoll:

The Indiana Department of Transportation (INDOT) with funding from the Federal Highway Administration is planning a project in Madison, Jefferson County, Indiana: US 421 New Road Construction (Des. No.: 1400918). Section 106 of the National Historic Preservation Act requires federal agencies to take into account the effects of their undertaking on historic properties (both archaeological and structures).

We are very early in the process: no alternatives have been developed and no reports have been generated. Step one of the Section 106 process initiates consultation.

Pursuant to 36 CFR 800.2(c), the individuals, agencies and organizations included on the attached list have been invited to be consulting parties. Per 36 CFR 800.3(f), the State Historic Preservation Officer (SHPO) is requested to notify this office if the SHPO is aware of any other individuals, agencies, or organizations which may be "entitled to become consulting parties."

If you have any questions regarding the Section 106 process for this project, please direct them to Patrick A. Carpenter via email at pacarpenter@indot.in.gov.

Sincerely,

Patrick Carpenter

Patrick A. Carpenter
Manager, Cultural Resources Office
INDOT Environmental Services

Enclosure
Emc: Michelle Allen, FHWA
Linda Weintraut, Weintraut & Assoc

-----Original Message-----
From: Lisa LaRue-Baker - UKB THPO [mailto:ukbthpo-larue@yahoo.com]
Sent: Wednesday, October 21, 2015 5:00 PM
To: Allen, Michelle (FHWA)
Cc: ebird@unitedkeetoowahband.org
Subject: Madison, Jefferson County, IN, US 421 New Road Construction (Des No 1400918)

The United Keetoowah Band of Cherokee Indians in Oklahoma has reviewed your project under Section 106 of the NHPA, and at this time, have no comments or objections. However, if any human remains are inadvertently discovered, please cease all work and contact us immediately.

In addition, the UKB reserves the right to re-enter consultation at any time on this project.

Best regards,

Lisa C. Baker
Acting THPO
United Keetoowah Band of Cherokee Indians in Oklahoma PO Box 746 Tahlequah, OK 74465

c 918.822.1952
ukbthpo-larue@yahoo.com

This email and any files transmitted with it are confidential and intended solely for the use of the individual or entity to whom they are addressed. If you have received this email in error please notify the system manager. This message contains confidential information and is intended only for the individual named. If you are not the named addressee you should not disseminate, distribute or copy this e-mail. Please notify the sender immediately by e-mail if you have received this e-mail by mistake and delete this e-mail from your system. If you are not the intended recipient you are notified that disclosing, copying, distributing or taking any action in reliance on the contents of this information is strictly prohibited.

Please FOLLOW our historic preservation page and LIKE us on FACEBOOK

Preserving America's Heritage

November 4, 2015

Mr. Patrick Carpenter
Manager, Cultural Resources Office
Indiana Department of Transportation
100 North Senate Avenue, Room N642
Indianapolis, IN 46204

Ref: *Consulting Party Invitation for US 421 New Road Construction*
Madison, Jefferson County, Indiana
Des. No.: 1400918

Dear Mr. Carpenter:

On October 19, 2015, the Advisory Council on Historic Preservation (ACHP) received from the Indiana Department of Transportation (INDOT) an invitation to become a consulting party for the referenced undertaking. Based upon the information provided, as well as the fact that the Federal Highway Administration (FHWA) is in the early stages of the Section 106 process, the ACHP does not wish to participate as a consulting party at this time. However, if FHWA determines through consultation with the consulting parties that the undertaking will adversely affect historic properties or that the development of a programmatic agreement is necessary, the FHWA must notify the ACHP in accordance with Section 106 of our regulations, "Protection of Historic Properties" (36 CFR Part 800). In addition, FHWA should provide us with the documentation outlined in 36 CFR §800.11(e).

Thank you for the invitation to participate in the consultation for this proposed undertaking. Should you have any questions, please contact Meghan Hesse at (202) 517-0214 or via e-mail at mhesse@achp.gov.

Sincerely,

Charlene Dwin Vaughn

Charlene Dwin Vaughn, AICP
Assistant Director
Office of Federal Agency Programs
Federal Permitting, Licensing, and Assistance Section

ADVISORY COUNCIL ON HISTORIC PRESERVATION
401 F Street NW, Suite 308 • Washington, DC 20001-2637
Phone: 202-517-0200 • Fax: 202-517-6381 • achp@achp.gov • www.achp.gov

Michael R. Pence, Governor
Cameron F. Clark, Director

DNR Indiana Department of Natural Resources

HISTORIC PRESERVATION AND ARCHAEOLOGY

Division of Historic Preservation & Archaeology•402 W. Washington Street, W274•Indianapolis, IN 46204-2739
Phone 317-232-1646•Fax 317-232-0693•dhpa@dnr.IN.gov•www.IN.gov/dnr/historic

November 4, 2015

Shaun Miller
Acting Cultural Resources Manager
Environmental Services
Indiana Department of Transportation
100 North Senate Avenue, Room N642
Indianapolis, Indiana 46204

Federal Agency: Indiana Department of Transportation ("INDOT")
on behalf of Federal Highway Administration

Re: Initiation of Section 106 consultation for the US 421 New Road Construction, in the City of Madison, Jefferson County, Indiana (INDOT Des. No. 1400918; DHPA No. 18317)

Dear Mr. Miller:

Pursuant to Section 106 of the National Historic Preservation Act of 1966, as amended (54 U.S.C. § 306108), 36 C.F.R. Part 800, and the "Programmatic Agreement Among the Federal Highway Administration, the Indiana Department of Transportation, the Advisory Council on Historic Preservation and the Indiana State Historic Preservation Officer Regarding the Implementation of the Federal Aid Highway Program In the State of Indiana," the staff of the Indiana State Historic Preservation Officer has reviewed the report submitted with Patrick Carpenter's letter dated October 9, 2015, with list of invited consulting parties enclosed, which we received on October 13, for the aforementioned project in the Jefferson County, Indiana.

We have two suggestions of parties who perhaps should be invited to participate in the Section 106 consultation. First, unless the mayor of the City of Madison has designated one of the invited parties to represent the city administration's interests, we would recommend inviting the mayor. Second, the Board of Commissioners of Jefferson County might have an interest in the project, even though it apparently would take place within the City of Madison.

If you have questions about archaeological issues, please contact Mitch Zoll at (317) 232-3492 or mzoll@dnr.IN.gov. If you have questions about buildings or structures, please contact John Carr at (317) 233-1949 or jcarr@dnr.IN.gov.

In future correspondence about the US 421 New Road Construction in Madison, please refer to DHPA No. 18317.

Very truly yours,

Mitchell K. Zoll
Deputy State Historic Preservation Officer

MKZ:JLC:jlc

emc: Michelle Allen, Federal Highway Administration, Indiana Division
Owen Lindauer, Acting Federal Preservation Officer, Federal Highway Administration, Office of Project Development and Environmental Review
Carolyn Nelson, Federal Highway Administration, Office of Project Development and Environmental Review
MaryAnn Naber, Advisory Council on Historic Preservation
Michele Curran, Ph.D., National Park Service, Midwest Regional Office
Shaun Miller, Indiana Department of Transportation
Mary Kennedy, Indiana Department of Transportation
Patrick Carpenter, Indiana Department of Transportation
Shirley Clark, Indiana Department of Transportation
Adam Burns, Crawford, Murphy and Tilly Engineers and Consultants
Linda Weintraut, Ph.D., Weintraut & Associates, Inc.
Mitchell Zoll, Deputy State Historic Preservation Officer, Indiana Department of Natural Resources
Chad Slider, Indiana Department of Natural Resources
Wade T. Tharp, Indiana Department of Natural Resources
John Carr, Indiana Department of Natural Resources

INDIANA DEPARTMENT OF TRANSPORTATION

100 North Senate Avenue
Room N642
Indianapolis, Indiana 46204

PHONE: (317) 233-2061
FAX: (317) 232-4929

Michael R. Pence, Governor
Brandye L. Hendrickson, Commissioner

November 4, 2015

Invitation sent to Mayor of Madison

Dear Consulting Party:

The Indiana Department of Transportation (INDOT) with funding from the Federal Highway Administration (FHWA) is planning a project in Madison, Jefferson County, Indiana: US 421 New Road Construction (Des. No.: 1400918). Section 106 of the National Historic Preservation Act requires federal agencies to take into account the effects of their undertaking on historic properties (both archaeological and structures).

We are very early in the process: no alternatives have been developed and no reports have been generated. Step one of the Section 106 process initiates consultation.

Pursuant to 36 CFR 800.2(c), you are hereby invited to be a consulting party to participate in efforts to identify historic properties that may be affected by the undertaking, assess the effects of the undertaking on historic properties, and seek ways to avoid, minimize, or mitigate adverse effects on historic properties. Historic Properties are properties that are listed or eligible for listing in the National Register of Historic Places (NRHP). The intent of this letter is to provide you an opportunity to become a consulting party by responding to the invitation via the enclosed post card.

Upon return of the postcard, we will include you as a willing consulting party. Please include your email address on that postcard to facilitate communication.

A guide to the Section 106 process prepared by the Advisory Council on Historic Preservation may be found here: http://www.achp.gov/citizensguide.html.

For questions regarding the Section 106 process, Tribal contacts are Michelle Allen at FHWA at michelle.allen@dot.gov or 317-226-7344 or Patrick A. Carpenter at pacarpenter@indot.in.gov or 317-233-2061; all other comments and questions, please direct to Linda Weintraut, Ph.D. at Linda@weintrautinc.com.

Sincerely,

Patrick Carpenter

Patrick A. Carpenter
Manager, Cultural Resources Office
INDOT Environmental Services

Enclosure
Emc: Michelle Allen, FHWA
Linda Weintraut, Weintraut & Assoc

INDIANA DEPARTMENT OF TRANSPORTATION

100 North Senate Avenue
Room N642
Indianapolis, Indiana 46204

PHONE: (317) 233-2061
FAX: (317) 232-4929

Michael R. Pence, Governor
Brandye L. Hendrickson, Commissioner

November 10, 2015

Dear Consulting Party:

The Indiana Department of Transportation (INDOT) with funding from the Federal Highway Administration (FHWA) is planning a project in Madison, Jefferson County, Indiana: US 421 New Road Construction (Des. No.: 1400918). Section 106 of the National Historic Preservation Act requires federal agencies to take into account the effects of their undertaking on historic properties (both archaeological and structures).

The archaeological and above-ground study has been initiated by INDOT's consultants, Weintraut & Associates (W&A). Staff for W&A are presently researching and reviewing previously prepared documentation, including the National Historic Landmark nomination. No reports have yet been produced.

FHWA has scheduled a consulting party meeting in Madison in order for you as a consulting party to meet the project team and to discuss resources within the area of potential effects (APE).

Since you have indicated your willingness to participate in the consulting party process, FHWA is inviting you to attend this Consulting Party Meeting to be held on December 3, 2015 at 1:00 pm at the following location:

Clifty Inn – Overlook Room
Clifty Falls State Park
2221 Clifty Drive
Madison, Indiana

For more information on the Section 106 process, please see a guide prepared by the Advisory Council on Historic Preservation: http://www.achp.gov/citizensguide.html.

For questions regarding Section 106, please direct comments and questions to Linda Weintraut, Ph.D. at Linda@weintrautinc.com.

Tribal contacts may contact Michelle Allen at FHWA at michelle.allen@dot.gov or 317-226-7344 or Shaun Miller at smiller.indot.in.gov or 317-233-6795.

We hope to see you at the consulting party meeting on December 3, 2015.

Sincerely,

Shaun Miller
Acting Manager, Cultural Resources Office
INDOT Environmental Services

Emc: Michelle Allen, FHWA
Linda Weintraut, Weintraut & Associates

---------- Forwarded message ----------
From: **Curran, Michele** <michele_curran@nps.gov>
Date: Tue, Nov 10, 2015 at 9:22 AM
Subject: Re: US 421 Approach, Madison, Indiana (Des. No.: 1400918)
To: Linda Weintraut <linda@weintrautinc.com>
Cc: Betsy Merritt <emerritt@savingplaces.org>, Genell Scheurell <GScheurell@savingplaces.org>

Thank you Linda....
Did Mary Ann Nabor respond, she is the FPO for FHWA?
Michele

Michele J. Curran, Ph.D. / Historian
National Historic Landmarks Program
National Park Service / Midwest Regional Office
601 Riverfront Drive / Omaha, Nebraska 68102

Phone: *402.661.1954* ***/ Fax:*** *402.661.1955*
Email: *michele_curran@nps.gov*

On Mon, Nov 9, 2015 at 4:10 PM, Linda Weintraut <linda@weintrautinc.com> wrote:

> Michele,
>
> Both the National Trust and the Advisory Council received invitations to participate in consultation. The Advisory Council sent a letter declining to participate "at this time." We have not received a response yet from the National Trust.
>
> The first consulting party meeting is scheduled on December 3, 2015.
>
> Have a good evening. Linda
>
> On Mon, Nov 9, 2015 at 3:42 PM, Curran, Michele <michele_curran@nps.gov> wrote:
>
>> Make sure you invite the National Trust and the National Council on Historic Preservation.....
>>
>> ***Michele J. Curran, Ph.D. / Historian***
>> ***National Historic Landmarks Program***
>> ***National Park Service / Midwest Regional Office***
>> ***601 Riverfront Drive / Omaha, Nebraska 68102***
>>
>> ***Phone:*** *402.661.1954* ***/ Fax:*** *402.661.1955*
>> ***Email:*** *michele_curran@nps.gov*

From: MaryAnn Naber
Sent: Thursday, November 12, 2015 12:01:55 PM
To: Curran, Michele
Cc: Allen, Michelle (FHWA); Meghan Hesse; Chris Wilson
Subject: RE: Madison Bridge Approaches

Hi, Michele-

I think I've discovered what prompted your email regarding the "no participation" of ACHP in this case. The ACHP received a very broad invitation to be a "consulting party" from the IN DOT. There was not enough information to prompt our participation at this time under the Appendix A criteria included in the Council's regulations; I looked at the information myself and did not recognize it as connected to the previous bridge project or NHL. As you can see from our response dated 11-4-15 (attached), the Council has not declined any participation in the project, only declining our participation at this time. We expect to be notified when there is more information developed for the alternatives carried forward that would indicate a basis for our involvement, such as potential for impacts to the NHL district or adverse effects to any other historic properties. Meghan Hesse is also working on FHWA projects in Indiana. I can assure you the two of us will be monitoring developments on this project closely!

Best regards,

MaryAnn

From: Curran, Michele [mailto:michele_curran@nps.gov]
Sent: Tuesday, November 10, 2015 1:42 PM
To: MaryAnn Naber
Subject: Madison Bridge Approaches

Hi Mary Ann,

Congratulations on the move to the ACHP.

I just heard that the ACHP has declined to be involved in the Bridge Approach project Section 106 consultation coming up in Madison IN. A lot of the people in Madison, and me, too, have some concerns about what the plan will be....in the past there has been mention of the removal of a number of historic buildings in order to accommodate the approach and rerouting of traffic through Madison.

Any change the ACHP will reconsider? or if it gets messy can you get involved later in the process?

Thank you, Michele

Michele J. Curran, Ph.D. / Historian
National Historic Landmarks Program
National Park Service / Midwest Regional Office
601 Riverfront Drive / Omaha, Nebraska 68102

Phone: 402.661.1954 / Fax: 402.661.1955
Email: michele_curran@nps.gov<https://mail.google.com/mail/?view=cm&fs=1&tf=1&to=michele_curran@nps.gov>

---------- Forwarded message ----------
From: **Carpenter, Patrick A** <PACarpenter@indot.in.gov>
Date: Fri, Nov 13, 2015 at 12:15 PM
Subject: RE: ACHP
To: "Curran, Michele" <michele_curran@nps.gov>
Cc: "michelle.allen@dot.gov" <michelle.allen@dot.gov>, "linda@weintrautinc.com" <linda@weintrautinc.com>, Adam Burns <aburns@cmtengr.com>, "Kennedy, Mary" <MKENNEDY@indot.in.gov>, "Miller, Shaun (INDOT)" <smiller@indot.in.gov>

Hi Michele,

Thanks for following-up on this matter. We just have such an institutional knowledge and memory of Madison's NHL status and bridge project that we didn't carry that forward enough in the letter for those who do not. We view the ACHP's involvement positively, so FHWA/INDOT will engage the ACHP as the project develops so they can jump in the process if they desire.

Thanks again,

Patrick Carpenter

Section 106 Specialist, Cultural Resources Office

Environmental Services

Indiana Department of Transportation

100 N Senate Ave., IGCN-Rm. N-642

Indianapolis, IN 46204-2216

317-233-2061

From: Curran, Michele [mailto:michele_curran@nps.gov]
Sent: Thursday, November 12, 2015 2:36 PM
To: Carpenter, Patrick A
Subject: ACHP

**** This is an EXTERNAL email. Exercise caution. DO NOT open attachments or click links from unknown senders or unexpected email. ****

Hi Patrick,

The reason the ACHP declined to participate is that the letter from IN DOT did not explain the connection to the Milton-Madison Bridge Project nor did it mention

that Madison is an NHL.

Before we get to a discussion of alternatives next spring, I think IN DOT should explain the project more clearly and re-invite the ACHP to participate.

Thank you,

Michele

Michele J. Curran, Ph.D. / Historian

National Historic Landmarks Program

National Park Service / Midwest Regional Office

601 Riverfront Drive / Omaha, Nebraska 68102

Phone: *402.661.1954* ***/ Fax:*** *402.661.1955*

Email: *michele_curran@nps.gov*

--
Linda Weintraut, Ph.D.
Weintraut & Associates, Inc.
PO Box 5034
4649 Northwestern Drive
Zionsville, Indiana 46077
317.733.9770 ext. 310

www.weintrautinc.com

WEINTRAUT & ASSOCIATES, INC.

Transmittal Letter

DATE: November 13, 2015

TO: Kathie Petkovic

FROM: Weintraut & Associates, Inc.

PROJECT: US 421 New Road Construction in Jefferson County, Indiana

# OF COPIES	TITLE	COMMENTS

ADDITIONAL NOTES:

Kathie,
Enclosed is the original consulting party invitation letter along with the consulting party meeting letter. Please send the postcard invitation back to us for our records. Thank you for your participation.

P.O. Box 5034, Zionsville, IN 46077 Tel: (317) 733-9770 Fax: (317) 733-9773 www.weintrautinc.com

---------- Forwarded message ----------
From: **Ludington, Link** <lludington@indianamuseum.org>
Date: Tue, Nov 17, 2015 at 2:13 PM
Subject: RE: December 3 Meeting
To: Bethany Natali <bethany@weintrautinc.com>
Cc: Linda Weintraut <linda@weintrautinc.com>

Oh, of course—I thought I might have missed something in my mail at home; I didn't think about it going to the Cornerstone Society P.O. box, and I didn't realize it had gone out so recently. In any event, I'll be there. Thanks.

INDIANA STATE MUSEUM AND HISTORIC SITES

Link Ludington, Director of Historic Preservation

1400 MSH North Lane; Madison IN 47250; phone 812-265-3536; fax 812-265-4797. LLudington@indianamuseum.org

---

From: Bethany Natali [mailto:bethany@weintrautinc.com]
Sent: Tuesday, November 17, 2015 2:06 PM
To: Ludington, Link
Cc: Linda Weintraut
Subject: Re: December 3 Meeting

**** This is an EXTERNAL email. Exercise caution. DO NOT open attachments or click links from unknown senders or unexpected email. ****

Mr. Ludington,

Please find attached a copy of the letter we transmitted to consulting parties inviting them to a meeting on December 3, 2015. According to our records, our office sent a paper copy of the attached via USPS to your attention at the following address:

Cornerstone Society, Inc.

PO Box 92

Madison, Indiana 47250

We hope to see you at the meeting on December 3, 2015. Please let us know if we should revise the contact information for the Cornerstone Society.

Best regards,

Bethany

On Tue, Nov 17, 2015 at 1:48 PM, Linda Weintraut <linda@weintrautinc.com> wrote:

Yes, the Cornerstone Society has been included on the consulting party list. I am on vacation but we will check to see why you have not received the letter inviting you to the first consulting party meeting.

Sent from my iPad

On Nov 17, 2015, at 11:31 AM, Ludington, Link <lludington@indianamuseum.org> wrote:

Has the Cornerstone Society, Inc. been included as a Consulting Party for this process? I returned the reply postcard, but have not received any notices regarding the Section 106 initial meeting.

INDIANA STATE MUSEUM AND HISTORIC SITES

Link Ludington, Director of Historic Preservation

1400 MSH North Lane; Madison IN 47250; phone 812-265-3536; fax 812-265-4797. LLudington@indianamuseum.org

Bethany Natali <bethany@weintrautinc.com>

Fwd: December 3 Meeting

1 message

Linda Weintraut <linda@weintrautinc.com> Fri, Nov 20, 2015 at 8:35 AM
To: Bethany Natali <bethany@weintrautinc.com>

---------- Forwarded message ----------
From: **Curran, Michele** <michele_curran@nps.gov>
Date: Tue, Nov 17, 2015 at 10:01 AM
Subject: December 3 Meeting
To: Linda Weintraut <linda@weintrautinc.com>
Cc: "Jan Vetrhus (janvetrhus@gmail.com)" <janvetrhus@gmail.com>, John Staicer <john@historicmadisoninc.com>, Link Ludington <LLudington@indianamuseum.org>, Greg Sekula <GSekula@indianalandmarks.org>

Hello Linda,
I will not be attending the initial meeting in Madison about the Section 106 process for the Madison Bridge Approach project. I would be available to participate via the phone, if that could be arranged. I will attend later meetings when the alternatives are presented.
Thank you,
Michele

Michele J. Curran, Ph.D. / Historian
National Historic Landmarks Program
National Park Service / Midwest Regional Office
601 Riverfront Drive / Omaha, Nebraska 68102

Phone: 402.661.1954 / Fax: 402.661.1955
Email: michele_curran@nps.gov

--
Linda Weintraut, Ph.D.
Weintraut & Associates, Inc.
PO Box 5034
4649 Northwestern Drive
Zionsville, Indiana 46077
317.733.9770 ext. 310

www.weintrautinc.com

From: Kelsey Noack Myers [mailto:kelsey.myers@nei-yahw.com]
Sent: Thursday, November 19, 2015 1:22 PM
To: Allen, Michelle (FHWA)
Cc: Alvin Windy Boy Sr.
Subject: U.S. 421 New Road Construction

Hi Michelle,

We received notice of the FHWA Consulting Party Meeting meeting in Madison, IN on December 3, 2015 but will be unable to attend due to other engagements. Would it be possible to receive notes or minutes of this meeting so that we can stay in the loop on this project?

Thanks,

Kelsey Noack Myers, M.A., RPA

Tribal Archaeologist

Chippewa Cree Cultural Resources Preservation Department
9740 Upper Box Elder Road

PO BOX 230
Box Elder MT 59521

Main office: 406-395-4700

kelsey.myers@nei-yahw.com

Linda Weintraut <linda@weintrautinc.com>

Dec 3 Sect 106 Bridge approach

1 message

John <john@historicmadisoninc.com> Thu, Nov 19, 2015 at 4:33 PM
Reply-To: john@historicmadisoninc.com
To: Linda Weintraut <linda@weintrautinc.com>

Hi Linda,

I must have missed a notification from you about the Dec. 3 Sect. 106 meeting. Can you please resend?

Thanks.

John

John Staicer,
President & Executive Director

Historic Madison, Inc/Historic Madison Foundation, Inc.

500 West Street
Madison, IN 47250

A National Historic Landmark District

Celebrating 50+ years of excellence in historic preservation

(812) 265-2967
FAX (812) 273-3941

website: www.historicmadisoninc.com

-------- Forwarded message ---------
From: **Teresa Adler** <luterilu62@gmail.com>
Date: Mon, Nov 23, 2015 at 2:50 PM
Subject: Des. No. 1400918 - Section 106
To: linda@weintrautinc.com
Cc: pacarpenter@indot.in.gov, linkludington@gmail.com, camillefife@aol.com

Good afternoon, Linda,

I recently moved back to Madison and now live in the neighborhood that will be affected by the changes to the Hwy 421/Madison-Milton bridge project. I would like to register as a consulting party.

I will be attending the meeting on December 3.

Thank you.

Teri Lu Adler, RLA, ASLA
714 E. Main St.
Madison, IN 47250
luterilu62@gmail.com

920-209-9159 cell
812-274-0557 home

--
Linda Weintraut, Ph.D.
Weintraut & Associates, Inc.
PO Box 5034
4649 Northwestern Drive
Zionsville, Indiana 46077
317.733.9770 ext. 310

www.weintrautinc.com

Weintraut & Associates, inc.

Transmittal Letter

DATE: November 23, 2015

TO: Teri Lu Adler

FROM: Weintraut & Associates, Inc.

PROJECT: US 421 in Madison, Indiana

# of copies	Title	Comments
1	Consulting party invitation letter	
1	Consulting party postcard	
1	Meeting invitation	

ADDITIONAL NOTES:

Teri Lu Adler,
Enclosed is the initial letter that was sent out to invited consulting parties along with a postcard. If you could please send the postcard back for our records we would appreciate it. The meeting invitation is also included which you can keep for your records. Thank you for your participation.
Weintraut & Associates, Inc.

P.O. Box 5034, Zionsville, IN 46077 Tel: (317) 733-9770 Fax: (317) 733-9773 www.weintrautinc.com

On Tue, Nov 24, 2015 at 11:24 AM, V. Young <artezian01@yahoo.com> wrote:

> Dear Linda,
>
> Thank you for the email concerning the Highway 421-106 consulting parties meeting at Clifty Inn on December 3, 2015. Although I will be unable to attend that particular meeting I do look forward to a follow-up email and being able to attend a meeting with others in person soon.
>
> Have a nice Thanksgiving holiday.
> Sincerely,
>
> Vickie Young

--------- Forwarded message ---------
From: **Betsy Merritt** <emerritt@savingplaces.org>
Date: Wed, Dec 2, 2015 at 11:21 AM
Subject: Re: US 421 Approach, Madison, Indiana (Des. No.: 1400918)
To: Linda Weintraut <linda@weintrautinc.com>, "bethany@weintrautinc.com" <bethany@weintrautinc.com>, "michelle.allen@dot.gov" <michelle.allen@dot.gov>, "pacarpenter@indot.in.gov" <pacarpenter@indot.in.gov>
Cc: "Michele Curran (michele_curran@nps.gov)" <michele_curran@nps.gov>, "john@historicmadisoninc.com" <john@historicmadisoninc.com>, "Greg Sekula (gsekula@indianalandmarks.org)" <gsekula@indianalandmarks.org>, "mnaber@achp.gov" <mnaber@achp.gov>, Genell Scheurell <GScheurell@savingplaces.org>

Thanks to the persistence of Michele Curran at the National Park Service, we were able to locate a snail mail letter (attached) inviting the National Trust to participate as a consulting party in the Section 106 review for the US 421 Approach project in Madison, IN.

In light of the potential adverse effects of this project on the National Historic Landmark District in Madison, and our involvement in the Milton-Madison Bridge project, the National Trust would like to participate as a consulting party under Section 106 for the US 421 Approach project.

I apologize for the delay in our response, but would appreciate your adding the National Trust to the list of consulting parties and notifying us of future opportunities for comments, meetings, and conference calls. Please use me as the point of contact, at the following email address: emerritt@savingplaces.org.

Thank you.

Sincerely,

Elizabeth Merritt

---------- Forwarded message ----------
From: **Linda Weintraut** <linda@weintrautinc.com>
Date: Wed, Dec 2, 2015 at 11:42 AM
Subject: Re: US 421 Approach, Madison, Indiana (Des. No.: 1400918)
To: Betsy Merritt <emerritt@savingplaces.org>
Cc: "bethany@weintrautinc.com" <bethany@weintrautinc.com>, "michelle.allen@dot.gov" <michelle.allen@dot.gov>, "pacarpenter@indot.in.gov" <pacarpenter@indot.in.gov>, "Michele Curran (michele_curran@nps.gov)" <michele_curran@nps.gov>, Adam Burns <aburns@cmtengr.com>, "Carr, John" <jcarr@dnr.in.gov>, "Miller, Shaun (INDOT)" <smiller@indot.in.gov>

We are pleased that the National Trust will be participating. I have attached a meeting invitation that was sent on November 10, 2015, to all who responded affirmatively to the invitation to consult.

We are also offering the option for consulting parties who will not be traveling to Madison to participate via telephone.

Dial in number: 800-791-2345
Tolled dial in number or Indianapolis area: 317-713-0120
Participant conference code: 39168#

If you wish to use the phone option and have difficulty accessing the call, please let me know. My cell is 317-691-4109.

Linda
[Quoted text hidden]

--
Bethany Natali
Historian
Weintraut & Associates, Inc.
PO Box 5034
Zionsville, Indiana 46077
T: (317) 733-9770 ext. 311
F: (317) 733-9773
www.weintrautinc.com

MadisonApproaches_Des1400918_CPMtg Invite_Nov 2015 (2).pdf
63K

---------- Forwarded message ----------
From: **Curran, Michele** <michele_curran@nps.gov>
Date: Thu, Dec 3, 2015 at 2:22 PM
Subject: Re: US 421 New Road Construction (Des. No.: 1400918), Consulting Party Meeting
To: Linda Weintraut <linda@weintrautinc.com>
Cc: bob@canidadentistry.com, "info@jchshc.org" <info@jchshc.org>, doofendugle@frontier.com, camille Fife <camillefife@aol.com>, madisonmainstreetprogram@gmail.com, Julianne Steger <preservation@madison-in.gov>, Link Ludington <linkludington@gmail.com>, tkmadison@yahoo.com, peter@woodburnkyle.com, Greg Sekula <gsekula@indianalandmarks.org>, Walnut Street Initiative Madison <hmi@historicmadisoninc.com>, John Staicer <john@historicmadisoninc.com>, artezian01@yahoo.com, ukbthpo-larue@yahoo.com, sheila.chingwa@gtbindians.com, kelsey.myers@nei-yahw.com, lpappenfort@peoriatribe.com, Jan Vetrhus <janvetrhus@gmail.com>, pvlereb@cinergeymetro.net, burns.roxi@gmail.com, riverboatmadison@aim.com, TeriLu Adler <luterilu62@gmail.com>, Adam Burns <aburns@cmtengr.com>, "michelle.allen@dot.gov" <michelle.allen@dot.gov>, "Carpenter, Patrick A" <PACarpenter@indot.in.gov>, "Miller, Shaun (INDOT)" <smiller@indot.in.gov>, "Kennedy, Mary" <mkennedy@indot.in.gov>, Bethany Natali <bethany@weintrautinc.com>, "Whitney.Pflanzer@borshoff.biz" <Whitney.Pflanzer@borshoff.biz>, "Erin Pipkin, APR" <erin.pipkin@borshoff.biz>, "Carr, John" <jcarr@dnr.in.gov>, "Zoll, Mitchell K" <MZoll@dnr.in.gov>, owen.lindauer@dot.gov, carolyn.nelson@dot.gov, "Slider, Chad" <CSlider@dnr.in.gov>, "Carlin, Whitney" <WCarlin@indot.in.gov>

Hello all,

Section 110 of the NHPA:

(f) Prior to the approval of any Federal undertaking which may directly and adversely affect any National Historic Landmark, the head of the responsible Federal agency shall, to the maximum extent possible, undertake such planning and actions as may be necessary to minimize harm to such landmark, and shall afford the Advisory Council on Historic Preservation a reasonable opportunity to comment on the undertaking.

Please keep this law in mind when developing the alternatives for the bridge approach.

Thank you,

Notes from December 3, 2016 Public Open House

- Underground culvert beneath Harrison Street (marked on maps)
- Ferry Street near Park School may be a Native American burial ground
- "East Enders" website has information on east side of Madison
- "The Town" a 1945 film by U.S. Government about Madison
- "Some Came Running," introduction includes bus driving through Madison. (Film, 1958)
- House at 926 E. Park Avenue is built on an angle, was a coffee house and tavern over the years (First & Last Chance Saloon)
- Brick archways beneath brewery site
- Stairs and posts near Hillside Inn associated with first hotel

Gmail by Google

Bethany Hughes <bhughes@weintrautinc.com>

Fwd: Historical town of Fulton info

1 message

Bethany Natali <bethany@weintrautinc.com> Fri, Dec 4, 2015 at 9:18 AM
To: Bethany Hughes <bhughes@weintrautinc.com>

---------- Forwarded message ----------
From: **3316rowland .** <3316rowland@gmail.com>
Date: Thu, Dec 3, 2015 at 6:13 PM
Subject: Historical town of Fulton info
To: bethany@weintrautinc.com, linda@weintrautinc.com

Hi Bethany and Linda,

It was great meeting you both at the INDOT meeting today. Thanks so much for the source information on the handsome maps you uncovered and were displaying.

Here is the website about the town of Fulton I mentioned. I hope there will be more consultant meetings I can come to!

https://fultonhistory.wordpress.com/

Happy Smith
220 Walnut St.
Madison, IN 47250

3316rowland@gmail.com

847-800-7175

--
Bethany Natali
Historian
Weintraut & Associates, Inc.
PO Box 5034
Zionsville, Indiana 46077
T: (317) 733-9770 ext. 311
F: (317) 733-9773
www.weintrautinc.com

---------- Forwarded message ----------
From: **Bethany Natali** <bethany@weintrautinc.com>
Date: Fri, Dec 4, 2015 at 10:51 AM
Subject: Re: Historical town of Fulton info
To: "3316rowland ." <3316rowland@gmail.com>
Cc: Linda Weintraut <linda@weintrautinc.com>

Happy,

Thank you for the link to this website. We enjoyed meeting you yesterday and appreciate the information you were able to provide about Madison's "East Ender" history. We have added your name to the consulting parties list and will be in contact regarding the next consulting parties meeting, which we anticipate will be sometime in early 2016.

Best regards,

Bethany
[Quoted text hidden]
[Quoted text hidden]

From: Jan Vetrhus <janvetrhus@gmail.com>
Date: December 15, 2015 at 6:45:48 AM EST
To: Linda Weintraut <linda@weintrautinc.com>
Subject: project 421

Linda, I mentioned that I had done research on the Civil War soldiers from Madison for the 150th anniversary of the war. I used city directories and tax records and the 1854 plat map to locate where they lived. I did not do a deed search for every property! However, many of the homes in the Project 421 area were home to the Civil War soldiers and are still standing. The program included the service history of the soldiers and what they did before and after the war. This is just the slide show portion of the project 421 area.

Jan Vetrhus
701 E. 2nd Street
Madison, IN
812-599-3447

Soldiers_-421_project.ppt
9307K

Meeting to Discuss Identification and Evaluation of Historic Properties
Project 421 – New Road Construction Project
INDOT Des. No.: 1400918 // DHPA No.: 18317
Indiana Department of Transportation
Indiana Government Center North--Room 925
Indianapolis, Indiana
January 12, 2016
1:00pm. – 2:00 pm

Meeting Attendees	
Paul Diebold	Indiana Department of Natural Resources (IDNR), Division of Historic Preservation and Archaeology (DHPA)
John Carr	IDNR, DHPA
Patrick Carpenter	Indiana Department of Transportation (INDOT)—Cultural Resources Office (CRO)
Michelle Allen	Federal Highway Administration (FHWA)
Shaun Miller	INDOT—CRO
Chad Slider	INDR, DHPA
Adam Burns	Crawford Murphy and Tilly (CMT)
Mary Kennedy	INDOT—CRO
Linda Weintraut	Weintraut & Associates (W&A)
Bethany Natali	W&A
	Summary prepared by W&A

Patrick Carpenter explained the purpose of the meeting is to discuss the area of overlap between the Madison National Historic Landmark (NHL) and National Register of Historic Places (NRHP) districts as it relates to the area of potential effects (APE) for Project 421 in Madison, Jefferson County, Indiana. INDOT-CRO has contacted the National Park Service (NPS) regarding extending the period of significance for this Section 106 study to extend to 1970. NPS indicated that any recommendations altering the NHL would add 1-2 years to the project.

Linda Weintraut explained that the APE is located on the east end of the Madison NHL and NRHP, with portions of the APE existing only within the NRHP district. For this Section 106 study, W&A is recommending that the NHL not be amended. The NRHP nomination does not include an inventory of Contributing and Non-Contributing resources and the period of significance ends in the nineteenth century. W&A is recommending that NRHP period of significance be extended to 1970, fifty years from the letting date for the project. There are some overlapping properties within the NHL and NRHP boundary that were constructed between 1939 (the last year for the NHL period of significance) and 1970. W&A is recommending certain properties considered Non-Contributing within the NHL (because they were outside the period of significance) be considered Contributing to the NRHP.

Paul Diebold clarified that the extension to the NRHP period of significance was for the purposes of this Section 106 study only and would not result in modification to either the NHL or NRHP. He said that he was fine with extending the period of significance for the NRHP, *for the purposes of this Section 106 study only*.

John Carr asked if additional themes would be added to the NRHP for this study. Bethany Natali stated that the Madison NRHP is eligible under Architecture, Commerce, and Transportation. W&A is recommending additional themes of Industry, Recreation, Transportation (extending to the post-war era), and Post World War II development to the areas of significance for the NRHP for the purposes of this Section 106 study.

The properties W&A recommends be considered Contributing to the NRHP that are not Contributing to the NHL are:

- Hillside Inn at 831 E. Main Street built c. 1968
- House at 706 E. Second Street built ca. 1960
- House at 311 St. Michael's Avenue built ca. 1960
- House at 320 St. Michael's Avenue built ca. 1960
- Service Station at901 E. Second Street built ca. 1950
- House at 415 Roosevelt Avenue built ca. 1970
- House 418 Roosevelt Avenue built ca. 1970

Weintraut noted that the NRHP includes a much larger boundary than the NHL and includes diverse resources north of NHL. Diebold said that extending the NRHP period of significance and adding themes is acceptable for the purposes of this Section 106 investigation but noted that if the NRHP were amended, the entire nomination would need to be updated.

Carr asked if it was possible that this area was dissected by time in that there would be a gap in construction similar to what occurs geographically in some places. Weintraut stated the construction of the area was not dissimilar to development patterns seen on the outskirts of other towns. Madison grew eastward from the original plat to encompass the former town of Fulton and the land between. It suffers some of the same lack of development during World War II seen elsewhere in Indiana.

Diebold noted some of the dissection may be due to historic preservation activities that have been undertaken in Madison, whereas those same preservation efforts may not have occurred on the outskirts of the historic town. However, Diebold said but the disconnection is a concern. He said he was more inclined to agree with the eligibility of the Hillside Inn and Gas Station as it related to the NRHP and the expanded themes of transportation and recreation.

Adam Burns then showed the group mapping of alternatives under consideration for the project. Michelle Allen asked that the mapping be updated to show all Contributing/Non-Contributing recommendations made in the Historic Property Report. The DHPA indicated that the introduction of an elevated roadway seemed “to have a greater impact to the grid and

streetscape" although Carr noted that consulting parties had expressed concern about the current level of truck noise and vibration so a bridge alternative does address those concerns in comparison to at-grade alternatives. An alternative with a cut section instead of bridging lower areas elicited a question from Carr who wondered if the cut would need to be wider than what is shown on the mapping. Burns said that curb and gutter, a wall, and clear zone would be added. As with the alternative that bridges lower areas, this alternative diminishes some starting and stopping which affects noise and vibration. An alternative with green space, which would facilitate economic development, was met with a concern that the design looks contemporary and has a more suburban feel than what one would expect to see in Madison. The IDNR/DHPA did not like the large footprint of the alternative which includes roundabout to the east (suggested by the public). CMT also said that two other alternatives (a tunnel and a long bridge spanning SR 56) offered by the public had been discarded because they were not prudent and did not meet purpose and need.

Following the discussion of all alternatives, Diebold stated that he preferred the alternative with a cut section. Carr asked where walls would be needed. Burns stated walls would go from the north side of the liquor store to tie-in at existing State Road (SR) 56. The walls would be approximately thirteen feet (13') tall at their tallest point and taper down to five-feet, six inches (5'6") at the ends. It was also possible to create more slope to the wall within planned right-of-way or if additional right-of-way could be purchased.

Weintraut asked when a noise comparison for the alternatives under consideration would be available. Burns said CMT would do a study under the preferred alternative and could provide estimates for the all other alternatives. Carpenter noted that all alternatives offer some level of improvement over the current condition of the approaches.

The meeting then adjourned.

This summary reflects the result of informal consultation between the agencies, project team members, and consulting parties at the time of the meeting. Accordingly, the information contained in this summary is considered to be pre-decisional and deliberative.

INDIANA DEPARTMENT OF TRANSPORTATION

100 North Senate Avenue
Room N642
Indianapolis, Indiana 46204

PHONE: (317) 233-2061
FAX: (317) 232-4929

Michael R. Pence, Governor
Brandye L. Hendrickson, Commissioner

January 25, 2016

Letter sent to all other participating consulting parties

Dear Consulting Party:

The Indiana Department of Transportation (INDOT) with funding from the Federal Highway Administration (FHWA) is planning a project in Madison, Jefferson County, Indiana: US 421 New Road Construction (Des. No.: 1400918). Section 106 of the National Historic Preservation Act requires federal agencies to take into account the effects of their undertaking on historic properties (both archaeological and structures). The archaeological and above-ground study has been initiated by INDOT's consultants, Weintraut & Associates (W&A).

FHWA has scheduled a consulting party meeting in Madison in order for you as a consulting party to meet the project team and to discuss resources within the area of potential effects (APE).

Since you have indicated your willingness to participate in the consulting party process, FHWA is inviting you to attend this Consulting Party Meeting to be held on February 16, 2016 at 1:30 pm at the following location:

Ivy Tech Community College Madison Campus
590 Ivy Tech Drive
Madison, Indiana 46250

If you are unable to attend in person, a conference line has been reserved.

Dial in number: 800-791-2345
Host conference code: 73130#
Participant conference code: 39168#

For questions regarding Section 106, Tribal contacts may contact Michelle Allen at FHWA at michelle.allen@dot.gov or 317-226-7344 or Shaun Miller at smiller.indot.in.gov or 317-233-2061

We hope to see you at the consulting party meeting on February 16, 2016.

Sincerely,

Shaun Miller
Acting Manager, Cultural Resources Office
INDOT Environmental Services

Emc: Michelle Allen, FHWA
Linda Weintraut, Weintraut & Associates

On Tue, Jan 26, 2016 at 11:20 AM, Linda Weintraut <linda@weintrautinc.com> wrote:

Please see attached invitation for consulting party meeting to be held on February 16, 2016 at 1:30 pm in Madison, Indiana. (A call in number is also included in the invitation).

--

Linda Weintraut, Ph.D.
Weintraut & Associates, Inc.
PO Box 5034
4649 Northwestern Drive
Zionsville, Indiana 46077
317.733.9770 ext. 310

www.weintrautinc.com

MadisonApproaches_Des1400918_CTMtgInvitetoTribes_2015.0125.pdf
231K

INDIANA DEPARTMENT OF TRANSPORTATION

100 North Senate Avenue
Room N642
Indianapolis, Indiana 46204

PHONE: (317) 233-2061
FAX: (317) 232-4929

Michael R. Pence, Governor
Brandye L. Hendrickson, Commissioner

January 27, 2016

Letter sent to participating Native American Tribes

Dear Consulting Party:

The Indiana Department of Transportation (INDOT) with funding from the Federal Highway Administration (FHWA) is planning a project in Madison, Jefferson County, Indiana: US 421 New Road Construction (Des. No.: 1400918). Section 106 of the National Historic Preservation Act requires federal agencies to take into account the effects of their undertaking on historic properties (both archaeological and structures). The archaeological and above-ground studies have been initiated by INDOT's consultants, Weintraut & Associates (W&A).

Enclosed with this letter is one electronic copy (CD) of the Historic Property Report (HPR) prepared by W&A. This report was reviewed and approved by INDOT's Cultural Resources Office on January 26, 2016. W&A has identified two historic resources within the project's Area of Potential Effects: the Madison, Indiana National Historic Landmark District and the Madison National Register of Historic Places District.

FHWA has scheduled a consulting party meeting in Madison in order to discuss historic resources within the Area of Potential Effects, especially the preliminary study area.

Since you have indicated your willingness to participate in the consulting party process, FHWA is inviting you to attend Consulting Party Meeting No. 2 to be held on February 16, 2016 at 1:30 pm at the following location:

Ivy Tech Community College Madison Campus
590 Ivy Tech Drive
Madison, Indiana 46250

If you are unable to attend in person, a conference line has been reserved.

Dial in number: 800-791-2345
Host conference code: 73130#
Participant conference code: 39168#

To facilitate the development of this project, please respond with comments to the HPR no later than **Tuesday, March 1, 2016.** Should you find that an extension to the response necessary, a reasonable amount may be granted upon request. Please direct any comments to Linda Weintraut via email at linda@weintrautinc.com or 317-733-9770. Tribal contacts may contact Shaun Miller at smiller.indot.in.gov or 317-233-2061or Michelle Allen at FHWA at michelle.allen@dot.gov or 317-226-7344.

We hope to see you at the consulting party meeting on February 16, 2016.

Sincerely,

Shaun Miller
Acting Manager, Cultural Resources Office
INDOT Environmental Services

Enclosure

Emc: Michelle Allen, FHWA
Linda Weintraut, Weintraut & Associates
Adam Burns, Crawford Murphy & Tilly

WEINTRAUT & ASSOCIATES, INC.

Transmittal Letter

DATE: January 27, 2016

TO: Mitch Zoll

FROM: Weintraut & Associates, Inc.

PROJECT: US 421 New Road Project

# OF COPIES	TITLE	COMMENTS
1	DHPA Review Request Submittal	
1	Tribal consulting party letter – 1/25/2016	
1	Consulting party letter – 1/27/2016	
1	Historic Property Report	
1	CD containing HPR, photographs, NHL form and NRHP form	

ADDITIONAL NOTES:

P.O. Box 5034, Zionsville, IN 46077 tel. (317) 733-9770 fax: (317) 733-9773 www.weintrautinc.com

Weintraut & Associates, inc.

Transmittal Letter

DATE: February 2, 2016

TO: Jefferson County Board of Commissioners

FROM: Weintraut & Associates, Inc.

PROJECT: US 421 New Road Project

# of copies	Title	Comments
1	Initial consulting party invitation letter	
1	Consulting party invitation postcard	
1	Meeting Minutes from Dec. 3, 2015	
1	Consulting Party Meeting Invitation	
1	HPR on CD	

ADDITIONAL NOTES:

Our records show that you were not invited to consult for this undertaking. If you would like to participate, please send the postcard back to us for our records. Thank you.

P.O. Box 5034, Zionsville, IN 46077 Tel: (317) 733-9770 Fax: (317) 733-9773 www.weintrautinc.com

---------- Forwarded message ----------
From: **Ludington, Link** <lludington@indianamuseum.org>
Date: Mon, Feb 15, 2016 at 4:16 PM
Subject: Madison US 421
To: "linda@weintrautinc.com" <linda@weintrautinc.com>

Attached are some notes for corrections that you might want to make in the draft, as well as a detail from the 1854 Hart and Mapother plat map (in the holdings of the Madison Jefferson County Public Library) that you might find easier to use. It was scanned by the Jefferson County Historical Society. Please let me know if you have any questions. See you tomorrow.

INDIANA STATE MUSEUM AND HISTORIC SITES

Link Ludington, Director of Historic Preservation

1400 MSH North Lane; Madison IN 47250; phone 812-265-3536; fax 812-265-4797. LLudington@indianamuseum.org

--
Linda Weintraut, Ph.D.
Weintraut & Associates, Inc.
PO Box 5034
4649 Northwestern Drive
Zionsville, Indiana 46077
317.733.9770 ext. 310

www.weintrautinc.com

2 attachments

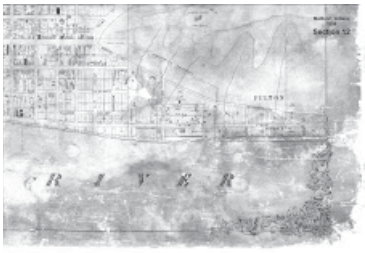

1854 Map section 12 B-W.jpg
5924K

Linda Weintraut message Feb.doc
27K

Linda Weintraut message Feb. 2016

13:

W&A recommends the period of significance of the NRHP to be extended to 1970 (fifty years prior to the likely letting date for this project)

18:

Description: There are approximately 200 resources within the listed in the NHL that are within the APE for this project.

19:

521 East Main Street This house (IHSSI No.: 077-377-29080) is identified as an Italianate but was constructed in the 1840s and later remodeled in the Italianate style circa 1870. The later window hoods and bracketed cornice are details of the Italianate style, but the house's massing and three-bay configuration with the off-set entrance is evocative of the Federal style.

21:

Abijah Pitcher House 708 East Main Street The Abijah Pitcher House (IHSSI No.: 077- 377-30026) was constructed in 1852 and is attributed to Francis Costigan. The three-bay house features both Greek Revival and Italianate detail added later. (This photograph shows the Greek Revival elements.) An iron fence separates from the yard from the sidewalk. It was originally the residence of dry goods and pork merchant Abijah Pitcher.

Marx' Row (referred to as the "East Main Street Row Houses" at 710-714 East Main Street (IHSSI Nos.: 077-377-30027, 077-377-30028, 077-377-30029) dates to 1838.

MOUNT MARSH
John Marsh
TELMA ST.
STREET
CHURCH
BALTIMORE
Judge Stevens
SERING ST
CORPORATION BOUNDARY
HIGH
19 STREET
CLAY
HARRISON
FILLMORE
STREET
MADISON & LAKE ERIE RAILROAD
DEPOT GROUNDS
FERRY ST.
PUBLIC SCHOOL
HIGH ST.
20
FULTON
WHITE, CUNNINGHAM & Co
Mammoth Cave
PORK HOUSE
Wilber & Pomeroy
FULTON
LAWRENCEBURGH ROAD
STREET
FIRST
SECOND
THIRD
FOURTH
Parks
R I V E R

-----Original Message-----
From: Greg Sekula [mailto:GSekula@indianalandmarks.org]
Sent: Tuesday, February 16, 2016 2:51 PM
To: Adam Burns <aburns@cmtengr.com>
Subject: Stone arch DuPont

---

2 attachments

IMG_8648.JPG
2838K

ATT00001.txt
1K

From: Betsy Merritt <emerritt@savingplaces.org>
Date: February 17, 2016 at 12:07:31 AM EST
To: "Erin Pipkin, APR" <erin.pipkin@borshoff.biz>
Cc: "Michele Curran (michele_curran@nps.gov)" <michele_curran@nps.gov>, "camillefife@aol.com" <camillefife@aol.com>, "Greg Sekula (gsekula@indianalandmarks.org)" <gsekula@indianalandmarks.org>, "John Staicer (john@historicmadisoninc.com)" <john@historicmadisoninc.com>, "mkennedy@indot.in.gov" <mkennedy@indot.in.gov>, "jcarr@dnr.in.gov" <jcarr@dnr.in.gov>, "owen.lindauer@dot.gov" <owen.lindauer@dot.gov>, "mnaber@achp.gov" <mnaber@achp.gov>, "linda@weintrautinc.com" <linda@weintrautinc.com>, "project421@borshoff.biz" <project421@borshoff.biz>
Subject: Re: Project 421 alternatives handout

What is going on?

I received an email from Linda Weintraut on Dec. 23, 2015, saying there would be a consulting party meeting in early 2016, and that meeting invitations would be sent out in advance with a call-in number. However, I never received any further notice or invitation to a Section 106 consultation meeting regarding this project.

On Feb. 4, I received an email (from "project421@borshoff.biz") about a public open house on Thursday Feb. 18. But the email had no information about any Section 106 consultation meeting.

And then this afternoon I received this email referring to "our discussion today," but with no information about the time of any discussion, or any agenda, or how to call in to participate.

Have any of the other consulting parties been dropped from the communication chain, or is it just the National Trust?
We would appreciate an explanation, and we ask that remedial measures be taken.

Sincerely,

Elizabeth S. Merritt, Deputy General Counsel
National Trust for Historic Preservation
2600 Virginia Ave. NW, Suite 1100
Washington, DC 20037
(202) 297-4133 (mobile)
(202) 588-6035 (Law Dep't)
Note my new e-mail address:
emerritt@savingplaces.org

From: Erin Pipkin, APR <erin.pipkin@borshoff.biz>
Sent: Tuesday, February 16, 2016 1:41 PM
Subject: Project 421 alternatives handout

Attached are the handouts for our discussion today.

Thanks,
Erin Pipkin

BORSHOFF
O 317.631.6400

borshoff.biz<http://borshoff.biz/>
twitter.com/borshoff<http://twitter.com/borshoff>
borshoff.biz/blog<http://borshoff.biz/blog>

CONFIDENTIAL NOTICE: This email message from Borshoff (including all attachments) is for the sole use of the intended recipient(s) and may contain confidential and privileged information. Any unauthorized review, use, disclosure, copying or distribution is strictly prohibited. If you are not the intended recipient, please contact the sender by reply email and destroy all copies of the original message.

From: Teri Adler [mailto:teri.lu@vrhabilis.com]
Sent: Wednesday, February 17, 2016 5:07 PM
To: Adam Burns <aburns@cmtengr.com>
Subject: Fwd: Stone arch from Heritage Trail

Adam, this is the photo of the stone arched bridge Jan Vetrhus found.

Sent from my iPhone

Begin forwarded message:

> **From:** Jan Vetrhus <janvetrhus@gmail.com>
> **Date:** February 17, 2016 at 3:59:17 PM EST
> **To:** Michele Curran <Michele_Curran@nps.gov>, Teri Adler <teri.lu@vrhabilis.com>, peggy vlerebome <pvlereb@cinergymetro.net>
> **Subject: Stone arch from Heritage Trail**
>
> This would be pretty massive as a city street! But it does show appropriate materials.
>
> IMG_0046

IMG_0046.jpeg
41K

-------- Forwarded message ----------
From: **Linda Weintraut** <linda@weintrautinc.com>
Date: Wed, Feb 17, 2016 at 10:51 AM
Subject: Re: Project 421 alternatives handout
To: Betsy Merritt <emerritt@savingplaces.org>
Cc: "Erin Pipkin, APR" <erin.pipkin@borshoff.biz>, "Michele Curran (michele_curran@nps.gov)" <michele_curran@nps.gov>, "camillefife@aol.com" <camillefife@aol.com>, "Greg Sekula (gsekula@indianalandmarks.org)" <gsekula@indianalandmarks.org>, "John Staicer (john@historicmadisoninc.com)" <john@historicmadisoninc.com>, "mkennedy@indot.in.gov" <mkennedy@indot.in.gov>, "jcarr@dnr.in.gov" <jcarr@dnr.in.gov>, "owen.lindauer@dot.gov" <owen.lindauer@dot.gov>, "mnaber@achp.gov" <mnaber@achp.gov>, "project421@borshoff.biz" <project421@borshoff.biz>

Betsy,
A package was mailed to all consulting parties on January 27, 2016, via US Postal Service; the package contained the invitation to yesterday's meeting, the call-in number for those who could not attend, and a CD copy of the Historic Property Report.

The Trust's package was not returned to our office; please let us know if you are not able to locate it. We can resend it.

It is my understanding that the handouts (emailed by Borshoff) were sent to those who had previously participated by telephone (and who were not in physical attendance yesterday) and to those already on the telephone.

We will be sending the meeting summary and an updated copy of the exhibits to all consulting parties. If you have questions, we can schedule a call; just let us know.

Linda

On Wed, Feb 17, 2016 at 12:07 AM, Betsy Merritt <emerritt@savingplaces.org> wrote:

> What is going on?
>
> I received an email from Linda Weintraut on Dec. 23, 2015, saying there would be a consulting party meeting in early 2016, and that meeting invitations would be sent out in advance with a call-in number. However, I never received any further notice or invitation to a Section 106 consultation meeting regarding this project.
>
> On Feb. 4, I received an email (from "project421@borshoff.biz") about a public open house on Thursday Feb. 18. But the email had no information about any Section 106 consultation meeting.
>
> And then this afternoon I received this email referring to "our discussion today," but with no information about the time of any discussion, or any agenda, or how to call in to participate.
>
> Have any of the other consulting parties been dropped from the communication chain, or is it just the National Trust?
> We would appreciate an explanation, and we ask that remedial measures be taken.
>
> Sincerely,
>
> Elizabeth S. Merritt, Deputy General Counsel
> National Trust for Historic Preservation
> 2600 Virginia Ave. NW, Suite 1100
> Washington, DC 20037
> (202) 297-4133 (mobile)
> (202) 588-6035 (Law Dep't)
> Note my new e-mail address:
> emerritt@savingplaces.org
>
> _____
> From: Erin Pipkin, APR <erin.pipkin@borshoff.biz>
> Sent: Tuesday, February 16, 2016 1:41 PM
> Subject: Project 421 alternatives handout
>
> Attached are the handouts for our discussion today.
>
> Thanks,
> Erin Pipkin
>
> BORSHOFF
> O 317.631.6400
>
> borshoff.biz<http://borshoff.biz/>
> twitter.com/borshoff<http://twitter.com/borshoff>
> borshoff.biz/blog<http://borshoff.biz/blog>
>
> CONFIDENTIAL NOTICE: This email message from Borshoff (including all attachments) is for the sole use of the intended recipient(s) and may contain confidential and privileged information. Any unauthorized review, use, disclosure, copying or distribution is strictly prohibited. If you are not the intended recipient, please contact the sender by reply email and destroy all copies of the original message.

Section 106 Meeting

1 message

Curran, Michele <michele_curran@nps.gov> Thu, Feb 18, 2016 at 2:44 PM
To: Adam Burns <aburns@cmtengr.com>, michelle.allen@dot.gov, smiller@indot.in.gov, MKENNEDY@indot.in.gov, "Carpenter, Patrick A" <PACarpenter@indot.in.gov>, "John L. Carr IN SHPO 4" <jcarr@dnr.in.gov>, Linda Weintraut <linda@weintrautinc.com>, bethany@weintrautinc.com, DevinS@ucindy.com, creiter@cmtengr.com, Whitney Carlin <wcarlin@indot.in.gov>
Cc: Betsy Merritt <emerritt@savingplaces.org>, "MaryAnn.Naber@dot.gov" <maryann.naber@dot.gov>, "Jan Vetrhus (janvetrhus@gmail.com)" <janvetrhus@gmail.com>, John Staicer <john@historicmadisoninc.com>, Link Ludington <LinkLudington@gmail.com>, Greg Sekula <GSekula@indianalandmarks.org>, Camille Fife CONTRACTOR <wgimadison@aol.com>, teri.lu@vrhabilis.com, Damon Welch <mayor@madison-in.gov>

Comments regarding the Section 106 Consultation Meeting in Madison, Indiana, February 16, 2016 regarding Project 421 Gateway to Madison (Madison Bridge Approach)

1. I do think all correspondence regarding the *US 421 New Road Project in the City of Madison, Jefferson County, Indiana, INDOT DES. No.: 1400918, DHPA No.:18317* should include that official project identification and title. While it is interesting that the project is being presented as "Project 421 Gateway to Madison" it is not appropriate to use that name in regard to official HNPA or NEPA consultation. The coined title for the project is being more prominently presented than its legal title, and I think it is misleading. It would be more appropriate for the contractor to use its business name as a header on material developed by them than it is to use a slogan-type heading.

2. The map-handouts presented at the Section 106 meeting need to be larger. The legend needs to be larger and more clearly and accurately labeled. I recommend a bold, black **X** be used to identify properties that will be demolished and a bold, black **/** be used to identify properties that will be affected.

3. I would like to remind you that **§ Section 110** of the **National Historic Preservation Act** *[16 U.S.C. 470h-2(f) — Federal undertakings affecting National Historic Landmarks]* requires that

(f) Prior to the approval of any Federal undertaking which may directly and adversely affect any National Historic Landmark, the head of the responsible Federal agency shall, to the maximum extent possible,undertake such planning and actions as may be necessary to minimize harm to such landmark, and shall afford the Advisory Council on Historic Preservation a reasonable opportunity to comment

on the undertaking.

4. As presented, all nine alternatives will have an adverse effect on the NHL with the overpass options providing a more significant adverse effect.

5. It is important that an artist rendering of the visual appearance of the overpass be developed so that people can see exactly what the overpass would look like in the neighborhood. Dimensions of the overpass should be included in the rendering...height above the street, width across the street, length of the incline and decline....how many feet. The representations presented at the meeting provided information regarding the appearance of the overpass, but not the surrounding neighborhood. I think it is important that a ground level photograph of the neighborhood in the vicinity of the proposed overpass be used and then the rendering of the overpass be inserted onto that photograph. This method would provide a much more accurate visual aid to the consultants and to the public.

4. It is of concern that the National Trust was not contacted via email about the meeting on February 16? Was the Advisory Council on Historic Preservation (ACHP) FHWA liaison Mary Ann Nabor contacted via email? I found it unusual that they were not present at the meeting. Please revise your contact list to ensure that all the consults are notified of meetings.

5. The Historic Property Report was well done. I would ask that the IHSSI acronym be explained and that the information from the State of Indiana database be addressed in a section of its own. The state survey is important and should be discussed and explained in its own right. Language used in the IHSSI should not be used in the section on the National Historic Landmark. Please remove paragraph 3 from page 15 and correct the captions on all photographs.

6. In the first paragraph, "There are approximately 1700 contributing resources within the NHL and around 200 of those are within the APE for this project. As many as X (number) NHL properties will be directly or indirectly affected by the project."

7. All NHL properties that will be affected by the project should be photographed and included in the Historic Property Report. The caption should include the following; Property Name, address or location. Alternatives X, Y, Z, etc. would result in the demolition of the property or an affect on the property.

I appreciate all of the work and thought you put into planning and present the initial Section 106 meeting and the alternatives were well-presented. I look forward to working with you all as the alternatives evolve. Please feel free to share this email with other interested parties.

Thank you,

Michele J. Curran, Ph.D. / Historian
National Historic Landmarks Program
National Park Service / Midwest Regional Office
601 Riverfront Drive / Omaha, Nebraska 68102

Phone: *402.661.1954* ***/ Fax:*** *402.661.1955*
Email: *michele_curran@nps.gov*

US 421 Madison Approach (Des. 1400918) Consulting Party Meeting No. 2 Summary

1 message

Linda Weintraut <linda@weintrautinc.com> Tue, Feb 23, 2016 at 2:37 PM

To: Bob Canida <bob@canidadentistry.com>, info@jchshc.org, doofendugel@yahoo.com, "Curran, Michele" <michele_curran@nps.gov>, camille Fife <camillefife@aol.com>, madisonmainstreetprogram@gmail.com, preservation@madison-in.gov, Link Ludington <linkludington@gmail.com>, tkmadison@yahoo.com, peter@woodburnkyle.com, Greg Sekula <gsekula@indianalandmarks.org>, Walnut Street Initiative Madison <hmi@historicmadisoninc.com>, John Staicer <john@historicmadisoninc.com>, "V. Young" <artezian01@yahoo.com>, Lisa LaRue-Baker - UKB THPO <ukbthpo-larue@yahoo.com>, jbunch@unitedkeetowahband.org, sheila.chingwa@gtbindians.com, Kelsey Noack Myers <kelsey.myers@nei-yahw.com>, lpappenfort@peoriatribe.com, Jan Vetrhus <janvetrhus@gmail.com>, Peggy Vlerebome <pvlereb@cinergymetro.net>, Roxi Burns <burns.roxi@gmail.com>, riverboatmadison@aim.com, Diane Hunter <dhunter@miamination.com>, mhesse@achp.gov, TeriLu Adler <luterilu62@gmail.com>, "Carr, John" <jcarr@dnr.in.gov>, "Zoll, Mitchell K" <MZoll@dnr.in.gov>, "Slider, Chad" <CSlider@dnr.in.gov>, Betsy Merritt <emerritt@savingplaces.org>, 3316rowland <3316rowland@gmail.com>

Cc: Adam Burns <aburns@cmtengr.com>, "michelle.allen@dot.gov" <michelle.allen@dot.gov>, "Carpenter, Patrick A" <PACarpenter@indot.in.gov>, "Miller, Shaun (INDOT)" <smiller@indot.in.gov>, "Kennedy, Mary" <mkennedy@indot.in.gov>, Bethany Natali <bethany@weintrautinc.com>, "Whitney.Pflanzer@borshoff.biz" <Whitney.Pflanzer@borshoff.biz>, "Erin Pipkin, APR" <erin.pipkin@borshoff.biz>, owen.lindauer@dot.gov, carolyn.nelson@dot.gov, "Carlin, Whitney" <WCarlin@indot.in.gov>

Just as an update, a summary is being prepared for Consulting Party Meeting No. 2 and should be emailed to you within the next couple of weeks.

--

Linda Weintraut, Ph.D.
Weintraut & Associates, Inc.
PO Box 5034
4649 Northwestern Drive
Zionsville, Indiana 46077
317.733.9770 ext. 310

www.weintrautinc.com

Michael R. Pence, Governor
Cameron F. Clark, Director

DNR Indiana Department of Natural Resources

Division of Historic Preservation & Archaeology•402 W. Washington Street, W274•Indianapolis, IN 46204-2739
Phone 317-232-1646•Fax 317-232-0693•dhpa@dnr.IN.gov•www.IN.gov/dnr/historic

February 24, 2016

Shaun Miller
Acting Cultural Resources Manager
Environmental Services
Indiana Department of Transportation
100 North Senate Avenue, Room N642
Indianapolis, Indiana 46204

Federal Agency: Indiana Department of Transportation ("INDOT")
on behalf of Federal Highway Administration

Re: Historic property report (Natali, 1/2016) and February 16, 2016, consulting parties meeting for the US 421 New Road Construction, in the City of Madison, Jefferson County, Indiana (INDOT Des. No. 1400918; DHPA No. 18317)

Dear Mr. Miller:

Pursuant to Sections 106 and 110(f) of the National Historic Preservation Act of 1966, as amended (54 U.S.C. §§ 306108 and 306107, respectively), 36 C.F.R. Part 800, and the "Programmatic Agreement Among the Federal Highway Administration, the Indiana Department of Transportation, the Advisory Council on Historic Preservation and the Indiana State Historic Preservation Officer Regarding the Implementation of the Federal Aid Highway Program In the State of Indiana," the staff of the Indiana State Historic Preservation Officer has reviewed the report submitted with your letter dated January 27, 2016, which we received on January 28, for the aforementioned project in the Jefferson County, Indiana.

We agree with Dr. Michele Curran of the National Park Service, Midwest Regional Office, that the historic property report was well done. We do not have any recommendations for improvement beyond those she has offered. We think there is some value in retaining, in some fashion, the relative ratings of properties that are used in the Indiana Historic Sites and Structures Inventory (i.e., contributing, notable, and outstanding). Those comparative ratings could become more useful later in the alternatives analysis and in the Section 106 consultation, if, for example, it becomes necessary to take a building but there is a choice of which building to take.

Avoidance and minimization of adverse effects on the National Historic Landmark district must certainly be given appropriate consideration. We also think that the concerns and wishes of the local consulting parties, both governmental and private, should be given careful consideration. They, after all, are representative of the people who will have to live with whatever is built. For that reason, we are not expressing strong preferences for any of the alternatives at this time. We will take this opportunity, however, to offer some thoughts about possible adverse effects and about various ways to minimize them.

Although the format was novel to my staff, the February 16 consulting party meeting was productive, in that it elicited many insightful comments and suggestions, especially from local consulting parties. My staff thinks, as many of the other consulting parties had commented, that more detail about the kinds of effects that would occur to various properties that contribute to the National Historic Landmark ("NHL") district or the National Register of Historic Places ("NRHP") district would be necessary before many of the current alternatives could be eliminated. There probably will be numerous contributing properties that will be affected visually by many of the alternatives. However, it seems to us that it would be most valuable to know which contributing properties would have to be taken, or that would have to lose part of their yard or grounds, for each of the alternatives.

It is our impression at this time that Alternative 1 (No build) is probably the only alternative under consideration that would not introduce any new adverse effects or intensified adverse effects in comparison to US 421's current effects, of which local

consulting parties had complained in the initial consulting parties meeting on December 3, 2015. However, it does not seem likely that the *status quo*, represented by Alternative 1, would be a satisfactory outcome for many, if any, of the local consulting parties. We realize, however, that for comparison purposes, Alternative 1 will be retained throughout the review process, until a preferred alternative is selected.

Of the other eight alternatives, it appears to us that only Alternative 3 (Reroute along 2nd Street) could possibly be constructed without causing a physical impact to any of the buildings (or their yards) that contribute to either the NHL district or the NRHP district. However, as it is currently envisioned, Alternative 3 would require vehicles to come to a stop at each of the intersections along the stretch of 2nd Street on which it would be routed, which likely would result in an increase in the amount of noise and vibration produced by accelerating and decelerating trucks within the NHL and NRHP districts over that which currently is produced. Substituting synchronized, three-color traffic signals at those intersections might reduce the noise from acceleration and deceleration, but it probably would put US 421 truck traffic on 2nd Street in close proximity to even more historic buildings than does the current US 421 alignment, which includes the much wider Main Street for part of its route through the districts. Thus, the effects of traffic noise and vibration might still be greater than those occurring along the current alignment, even if traffic moved through the districts more smoothly than at present.

Either elevating Harrison Street over 2nd Street (as in alternatives 4, 5, 7, and 9) or running an at-grade Harrison Street between retaining walls and through a cut in the hillside (as in alternatives 6A and 6B) seemed to be more palatable to many of the local consulting parties at the February 16 meeting if the retaining walls of an elevated roadway or retaining walls along a cut were to wear a veneer of local stone. That possibility certainly is worth exploring, as that retaining wall treatment could be quite attractive visually. In our experience with other highway projects, however, we typically have seen form-lined concrete used in such situations, rather than stone, even when stone veneer had been suggested by a consulting party. It is our impression that there could be a significant difference in cost between stone veneer and form-lined concrete. We recommend that the consultants obtain at least rough estimates of the costs of stone veneer and form-lined concrete before the next consulting parties meeting, so that the economic practicality of using stone is known and can be shared and discussed with the consulting parties.

On the subject of a grade-separated Harrison Street, my staff heard comments to the effect that elevating Harrison over 2nd Street would create the impression that the parts of the NHL and NRHP districts lying east of the elevated street are visually, if not also physically, cut off from the rest of their districts. In one discussion group, my staff's suggestion of elevating Harrison on a bridge structure, rather than on fill, in order to preserve some sight lines from one side of Harrison to the other, caused even greater concern. At least one local consulting party said it would give the neighborhood too much of an urban feel and would be unattractive. Another expressed concern that such a large and covered, undeveloped area would be inviting to those seeking a dark and secluded place for criminal activities. Those are reasonable concerns. We wonder, however, whether it might still be worthwhile to estimate, at least roughly, how expensive it would be to elevate Harrison Street on a bridge structure with at least modest architectural detailing, in case it proves to be economically imprudent to use stone veneer on retaining walls. That way, a comparison of costs could be shared and discussed, if the idea of form-lined, concrete retaining walls were at that point to strike the consulting parties as less appealing than a bridge structure.

We understand that no archaeological field work will be performed before a preferred alternative is identified, but we will be glad to review a report on that investigation whenever it becomes available.

If you have questions about buildings or structures, please contact John Carr at (317) 233-1949 or jcarr@dnr.IN.gov. Questions about archaeological issues should be directed to Mitch Zoll at (317) 232-3492 or mzoll@dnr.IN.gov.

In future correspondence about the US 421 New Road Construction in Madison, please refer to DHPA No. 18317.

Very truly yours,

Mitchell K. Zoll
Deputy State Historic Preservation Officer

MKZ:JLC:jlc

emc: Michelle Allen, Federal Highway Administration, Indiana Division
Owen Lindauer, Acting Federal Preservation Officer, Federal Highway Administration, Office of Project Development and Environmental Review
Carolyn Nelson, Federal Highway Administration, Office of Project Development and Environmental Review

MaryAnn Naber, Advisory Council on Historic Preservation
Michele Curran, Ph.D., National Park Service, Midwest Regional Office
Shaun Miller, Indiana Department of Transportation
Mary Kennedy, Indiana Department of Transportation
Patrick Carpenter, Indiana Department of Transportation
Shirley Clark, Indiana Department of Transportation
Adam Burns, Crawford, Murphy and Tilly Engineers and Consultants
Linda Weintraut, Ph.D., Weintraut & Associates, Inc.
Mitchell Zoll, Deputy State Historic Preservation Officer, Indiana Department of Natural Resources
Chad Slider, Indiana Department of Natural Resources
Wade T. Tharp, Indiana Department of Natural Resources
John Carr, Indiana Department of Natural Resources

INDIANA LANDMARKS

Southern Regional Office
115 West Chestnut Street, Jeffersonville, IN 47130
812 284 4534 / 800 450 4534 / www.indianalandmarks.org

February 29, 2016

Linda Weintraut, Ph.D.
Weintraut & Associates
P. O. Box 5034
Zionsville, IN 46077

RE: US 421 New Road Project in the City of Madison, Jefferson County, IN (Des. No.: 1400918)

Dear Dr. Weintraut:

Indiana Landmarks appreciates the opportunity to provide initial comments on the Historic Property Report (HPR) and Alternatives 1-9 that were unveiled at the February 16th meeting as part of consultation under Section 106 and 110 of the National Historic Preservation Act, as amended.

There are no significant recommended changes to the HPR as presented. Indiana Landmarks concurs with the recommendation of the National Park Service that resources in the National Register and National Historic Landmark districts should be evaluated only under the ratings of "contributing" and "non-contributing" and that other rating references identified in the Indiana Historic Sites and Structures Inventory (IHSSI) should be segregated into a separate section of the document and not co-mingled. Landmarks is also in agreement that the period of significance for purposes of this project should be extended to 1970 to help facilitate planning.

Regarding alternatives, it would be helpful to quantify the number of contributing and non-contributing resources impacted for each alternative. This should include, in particular, the number of contributing properties/ resources that would be demolished under each alternative. Based on our initial conversation, Landmarks is in concurrence with comments expressed by many consulting party participants at the February 16th meeting that the following alternatives, as presented, be eliminated from the project: No Build (Alternative 1), Improved Intersections (Alternative 2), Reroute along 2nd Street (Alternative 3), and Roundabout at SR 56 and Ferry Street (Alternative 8). More detailed information is needed on the remaining alternatives to better assess impacts.

Indiana Landmarks looks forwarded to continued consultation on this very important project for the City of Madison.

Sincerely,

Gregory A. Sekula, AICP
Southern Regional Director

INDIANA LANDMARKS REVITALIZES COMMUNITIES, RECONNECTS US TO OUR HERITAGE, AND SAVES MEANINGFUL PLACES

Indiana Department of Transportation
US 421 – New Road Construction Project
INDOT Des. No.: 1400918
ACHP Web Meeting

DATE: March 2, 2016, 10:00 a.m. – 11:30 a.m.

LOCATION: Web Conference Call

SUBJECT: US 421 New Road Construction
ACHP Discussion

ATTENDANCE:

Whitney Carlin ..... Indiana Department of Transportation (INDOT)
Chris Wahlman ..... INDOT
Patrick Carpenter ..... INDOT
Shaun Miller ..... INDOT
Mary Kennedy ..... INDOT
Michelle Allen ..... Federal Highway Administration (FHWA)
Meghan Hesse ..... ACHP
MaryAnn Naber ..... ACHP
Linda Weintraut ..... Weintraut & Associates
Bethany Natali ..... Weintraut & Associates
Adam Burns ..... CMT
Cassie Reiter ..... CMT
Jerry Bollinger ..... CMT
Eric Arthur ..... CMT

The objective of this discussion was to introduce the nine proposed alternatives for the US 421 New Road Construction Project in Madison, IN.

1. **FHWA - Project Introduction**
   a. Michelle Allen introduced the project and described that this approach project was originally included in with the Milton-Madison Bridge project, but was later pulled out into its own separate project to address immediate structural safety concerns on the bridge. She also noted that this project is set to be partially funded with federal money.

2. **Weintraut & Associates – Section 106 Update**
   a. Linda Weintraut described where in the process the project is. She also detailed out how the two historic districts were studied and how the impacts were going to be evaluated.

3. **CMT - Project Overview**

pw:\\CMTPW.cmtengr.com:CMTPROJECTWISE\Documents\Projects\INDOT\15709-01\Correspondence\Meetings\20160302 US421 ACHP MtgMinutes.docx

a. Project development – During the first round of public meetings, the design team gathered thoughts and ideas about possible alternatives. Those thoughts and ideas were added to the CMT developed alternatives that were presented at mid-February outreach meetings. The alternatives were grouped into clusters of similar concepts. Those clusters were Existing Alignment (Alternatives 1,2,&3), Grade-Separated Alignment (Alternatives 4,5,&9), At-Grade Alignment (Alternative 6), and Alignment Change (Alternatives 7&8). A member of the design team went into more detail about each of the alternatives.

4. **Alternatives Review –** The group was presented each alternative cluster by a team member and comments were discussed. The following are short descriptions of each alternative and the comments that the team members received while presenting the alternatives.
   a. Alternative 1 - No build; provides a benchmark to evaluate all other alternatives. No cost, no impact. Doesn't solve the goals.
   b. Alternative 2 – Existing alignment with intersection upgrades for trucks.
      - MaryAnn Naber asked if this alternative meets the purpose and need. It was discussed that alternative 2 does not meet the purpose and need.
   c. Alternative 3 - Reroute traffic down Jefferson to 2nd to go through the residential neighborhood. This alternative breaks down quickly from a traffic perspective.
   d. Alternative 4 - Grade-separated. Bridge over 2nd St. Allow US 421 traffic to flow freely between river and Main St.
   e. Alternative 5 - Also grade-separated. Similar to alternative 4, except US 421 tees into SR 56.
   f. Alternative 6 - Cuts through the bluff to minimize the grade difference between Main St. and 2nd St. SR 56 ties into the intersection at 2nd St.
      - MaryAnn Naber asked how the Consulting Parties viewed alternative 6. It was discussed that they generally liked it but had some concerns about the size of the intersection and the size of the retaining wall.
   g. Alternative 7 - Grade-separated, US 421 tees in to SR 56. Interchange @ 2nd.
   h. Alternative 8 - Roundabout; addresses resident requests to remove traffic from the neighborhoods altogether. Ferry and SR 56 roundabout. Connector up to 2nd for local traffic.
      - MaryAnn Naber asked what the public input on alternative 8 was. It was discussed that this alternative had very mixed reviews. Michelle agreed that she had heard similar mixed reviews.
   i. Alternative 9 - Bridge over 2nd St. 56 traffic routed along 2nd St to Baltimore.

   MaryAnn Naber asked if any alternatives were being taken off the table, to which CMT replied that alternatives 2, 3, and 9 did not meet the project's purpose and need and are being eliminated.

5. General Comments

a. Preference is to minimize impacts to districts.
b. The retaining wall and bridge could be softened with use to different materials.
c. MaryAnn Naber noted that she liked alternatives 4 and 6.
d. ACHP will formally notify that they will participate in the process and will send over participation letter within the next week.
e. ACHP will be signatories to any agreement.

6. Next Steps

a. Linda Weintraut and Patrick Carpenter noted that any project materials will begin to be posted on IN Scope.
b. CMT to work with INDOT to determine/confirm remaining alternatives to be studied further.

NOTE: Please advise in writing of any corrections/additions to the minutes. If no written response is received within seven (7) days of receipt of these minutes, they will be considered approved as written.

pw:\\CMTPW.cmtengr.com:CMTPROJECTWISE\Documents\Projects\INDOT\15709-01\Correspondence\Meetings\20160302 US421 ACHP MtgMinutes.docx

Milford Wayne Donaldson, FAIA
Chairman

Teresa Leger de Fernandez
Vice Chairman

John M. Fowler
Executive Director

Preserving America's Heritage

March 8, 2016

Mr. Gregory Nadeau
Administrator
Federal Highway Administration
1200 New Jersey Ave S.E.
Washington, D.C. 20590

Ref: *Proposed US 421 New Road Construction Project*
Madison, Indiana

Dear Mr. Nadeau:

In response to a notification by the Indiana Department of Transportation (INDOT), the Advisory Council on Historic Preservation (ACHP) will participate in consultation regarding the New Road Construction Project for US 421, in Madison, Indiana. Our decision to participate in this consultation is based on the *Criteria for Council Involvement in Reviewing Individual Section 106 Cases*, contained within our regulations. The criteria are met because the project will have substantial impacts on important historic properties, and has the potential for presenting procedural problems.

Section 800.6(a)(1)(iii) of our regulations requires that we notify you, as the head of the agency, of our decision to participate in consultation. By copy of this letter, we are also notifying Ms. Michelle Allen, Planning & Environmental Specialist at the Indiana Division of FHWA and Mr. Mitchell Zoll, Indiana State Historic Preservation Officer of this decision.

Our participation in this consultation will be handled by Ms. MaryAnn Naber who can be reached at (202) 517-0218 or via e-mail at mnaber@achp.gov. We look forward to working with your agency and other consulting parties to consider alternatives and seek agreement on measures to avoid or minimize the adverse effects of this proposed project on important historic properties.

Sincerely,

John M. Fowler
Executive Director

ADVISORY COUNCIL ON HISTORIC PRESERVATION
401 F Street NW, Suite 308 • Washington, DC 20001-2637
Phone: 202-517-0200 • Fax: 202-517-6381 • achp@achp.gov • www.achp.gov

Re: US 421 Madison Approach (Des. No. 1400918; DHPA No. 18317)

1 message

Curran, Michele <michele_curran@nps.gov> Thu, Mar 10, 2016 at 11:00 AM
To: Linda Weintraut <linda@weintrautinc.com>
Cc: Bob Canida <bob@canidadentistry.com>, "info@jchshc.org" <info@jchshc.org>, doofendugel@yahoo.com, camille Fife <camillefife@aol.com>, madisonmainstreetprogram@gmail.com, Julianne Steger <preservation@madison-in.gov>, Link Ludington <linkludington@gmail.com>, tkmadison@yahoo.com, peter@woodburnkyle.com, Greg Sekula <gsekula@indianalandmarks.org>, Walnut Street Initiative Madison <hmi@historicmadisoninc.com>, John Staicer <john@historicmadisoninc.com>, "V. Young" <artezian01@yahoo.com>, Lisa LaRue-Baker - UKB THPO <ukbthpo-larue@yahoo.com>, jbunch@unitedkeetoowahband.org, sheila.chingwa@gtbindians.com, Kelsey Noack Myers <kelsey.myers@nei-yahw.com>, lpappenfort@peoriatribe.com, Jan Vetrhus <janvetrhus@gmail.com>, Peggy Vlerebome <pvlereb@cinergymetro.net>, Roxi Burns <burns.roxi@gmail.com>, riverboatmadison@aim.com, Diane Hunter <dhunter@miamination.com>, mhesse@achp.gov, TeriLu Adler <luterilu62@gmail.com>, "Carr, John" <jcarr@dnr.in.gov>, "Zoll, Mitchell K" <MZoll@dnr.in.gov>, "Slider, Chad" <CSlider@dnr.in.gov>, Betsy Merritt <emerritt@savingplaces.org>, 3316rowland <3316rowland@gmail.com>, mnaber@achp.gov, Adam Burns <aburns@cmtengr.com>, "michelle.allen@dot.gov" <michelle.allen@dot.gov>, "Carpenter, Patrick A" <PACarpenter@indot.in.gov>, "Miller, Shaun (INDOT)" <smiller@indot.in.gov>, "Kennedy, Mary" <mkennedy@indot.in.gov>, Bethany Natali <bethany@weintrautinc.com>, "Whitney.Pflanzer@borshoff.biz" <Whitney.Pflanzer@borshoff.biz>, "Erin Pipkin, APR" <erin.pipkin@borshoff.biz>, owen.lindauer@dot.gov, carolyn.nelson@dot.gov, "Carlin, Whitney" <WCarlin@indot.in.gov>

Hi Linda,
Please amend my first comment about removing the IHSSI information from the section on the NHL. Please add that I stated the Indiana Survey is important and should be added and discussed in a section of its own.
Thank you, Michele

Michele J. Curran, Ph.D. / Historian
National Historic Landmarks Program
National Park Service / Midwest Regional Office
601 Riverfront Drive / Omaha, Nebraska 68102

Phone: *402.661.1954* ***/ Fax:*** *402.661.1955*
Email: *michele_curran@nps.gov*

On Thu, Mar 10, 2016 at 9:09 AM, Linda Weintraut <linda@weintrautinc.com> wrote:

> Please see attached meeting summary from our meeting held on February 16, 2016. The exhibits from the meeting are appended to the document.
>
> --
> Linda Weintraut, Ph.D.
> Weintraut & Associates, Inc.
> PO Box 5034
> 4649 Northwestern Drive
> Zionsville, Indiana 46077
> 317.733.9770 ext. 310
>
> www.weintrautinc.com

421 project meeting summary

1 message

Peggy Vlerebome <pvlereb@cinergymetro.net> Thu, Mar 10, 2016 at 11:14 AM
To: Linda <linda@weintrautinc.com>

Hi, Linda,
There are a couple of editing changes I'd like to recommend.
In the first one below, the words "District" and "overlap" need a space between them. Also, I think the word "former" should be added before the words "Service Station" because it no longer is a service station but the building still stands.

In cases where the NHL and Districtoverlap, the Contributing and Non-Contributing designations established for the NHL are also used for the District with two exceptions: the Service Station at 901 E. Second Street and Hillside Inn at 831 E. Main Street are both considered Contributing to the Distirct, but are not contributing to the NHL.

The other change is that the word "lesson" should be "lessen."

CMT responded that although Alternative 3 was shown on mapping, its series of stops and starts mean that it does not lesson the vibration and noise impacts of the project (as discussed in the small group discussion) so it will likely be discarded.

Cheers,
Peggy Vlerebome

RE: US 421 Madison Approach (Des. No. 1400918; DHPA No. 18317)

1 message

Joe Bunch <jbunch@unitedkeetoowahband.org> Thu, Mar 10, 2016 at 10:58 AM
To: Linda Weintraut <linda@weintrautinc.com>, Bob Canida <bob@canidadentistry.com>, "info@jchshc.org" <info@jchshc.org>, "doofendugel@yahoo.com" <doofendugel@yahoo.com>, "Curran, Michele" <michele_curran@nps.gov>, camille Fife <camillefife@aol.com>, "madisonmainstreetprogram@gmail.com" <madisonmainstreetprogram@gmail.com>, "preservation@madison-in.gov" <preservation@madison-in.gov>, Link Ludington <linkludington@gmail.com>, "tkmadison@yahoo.com" <tkmadison@yahoo.com>, "peter@woodburnkyle.com" <peter@woodburnkyle.com>, Greg Sekula <gsekula@indianalandmarks.org>, Walnut Street Initiative Madison <hmi@historicmadisoninc.com>, John Staicer <john@historicmadisoninc.com>, "V. Young" <artezian01@yahoo.com>, Lisa LaRue-Baker - UKB THPO <ukbthpo-larue@yahoo.com>, "sheila.chingwa@gtbindians.com" <sheila.chingwa@gtbindians.com>, Kelsey Noack Myers <kelsey.myers@nei-yahw.com>, "lpappenfort@peoriatribe.com" <lpappenfort@peoriatribe.com>, Jan Vetrhus <janvetrhus@gmail.com>, Peggy Vlerebome <pvlereb@cinergymetro.net>, Roxi Burns <burns.roxi@gmail.com>, "riverboatmadison@aim.com" <riverboatmadison@aim.com>, Diane Hunter <dhunter@miamination.com>, "mhesse@achp.gov" <mhesse@achp.gov>, TeriLu Adler <luterilu62@gmail.com>, "Carr, John" <jcarr@dnr.in.gov>, "Zoll, Mitchell K" <MZoll@dnr.in.gov>, "Slider, Chad" <CSlider@dnr.in.gov>, Betsy Merritt <emerritt@savingplaces.org>, 3316rowland <3316rowland@gmail.com>, "mnaber@achp.gov" <mnaber@achp.gov>
Cc: Adam Burns <aburns@cmtengr.com>, "michelle.allen@dot.gov" <michelle.allen@dot.gov>, "Carpenter, Patrick A" <PACarpenter@indot.in.gov>, "Miller, Shaun (INDOT)" <smiller@indot.in.gov>, "Kennedy, Mary" <mkennedy@indot.in.gov>, Bethany Natali <bethany@weintrautinc.com>, "Whitney.Pflanzer@borshoff.biz" <Whitney.Pflanzer@borshoff.biz>, "Erin Pipkin, APR" <erin.pipkin@borshoff.biz>, "owen.lindauer@dot.gov" <owen.lindauer@dot.gov>, "carolyn.nelson@dot.gov" <carolyn.nelson@dot.gov>, "Carlin, Whitney" <WCarlin@indot.in.gov>, Eric Oosahwee <eoosahwee@unitedkeetoowahband.org>

Thank you for the information, please note correspondence should be sent to UKB THPO Eric Oosahwee-Voss, e-mail address eoosahwee-voss@unitedkeetoowahband.org and his phone number is 918-458-6717.

Thank you,

Joe Bunch,

Assistant Chief

United Keetoowah Band of Cherokee Indians

Phone 918-207-7625

From: Linda Weintraut [mailto:linda@weintrautinc.com]
Sent: Thursday, March 10, 2016 9:09 AM
To: Bob Canida; info@jchshc.org; doofendugel@yahoo.com; Curran, Michele; camille Fife; madisonmainstreetprogram@gmail.com; preservation@madison-in.gov; Link Ludington; tkmadison@yahoo.com; peter@woodburnkyle.com; Greg Sekula; Walnut Street Initiative Madison; John Staicer; V. Young; Lisa LaRue-Baker - UKB THPO; Joe Bunch; sheila.chingwa@gtbindians.com; Kelsey Noack Myers; lpappenfort@peoriatribe.com; Jan Vetrhus; Peggy Vlerebome; Roxi Burns; riverboatmadison@aim.com; Diane Hunter; mhesse@achp.gov; TeriLu Adler; Carr, John; Zoll, Mitchell K; Slider, Chad; Betsy Merritt; 3316rowland; mnaber@achp.gov
Cc: Adam Burns; michelle.allen@dot.gov; Carpenter, Patrick A; Miller, Shaun (INDOT); Kennedy, Mary; Bethany Natali; Whitney.Pflanzer@borshoff.biz; Erin Pipkin, APR; owen.lindauer@dot.gov; carolyn.nelson@dot.gov; Carlin, Whitney
Subject: US 421 Madison Approach (Des. No. 1400918; DHPA No. 18317)

Please see attached meeting summary from our meeting held on February 16, 2016. The exhibits from the meeting are appended to the document.

--

Linda Weintraut, Ph.D.

Weintraut & Associates, Inc.

From: MaryAnn Naber <mnaber@achp.gov>
Date: May 6, 2016 at 12:14:35 PM EDT
To: Linda Weintraut <linda@weintrautinc.com>
Subject: RE: SR 421 New Road Project Madison Approach (Des No. 1400918; DHPA No. 18317)

Thank you for the update, Linda! It is really helpful to know that the project is moving along and that there are clear next steps laid out to guide further progress. I appreciate being kept in the loop on the project, as I'm sure others do, and look forward to working with all the consulting parties to develop the best project we can to meet the needs of the community.

Best regards,

MaryAnn

MaryAnn Naber

SENIOR PROGRAM ANALYST/FHWA LIAISON

ADVISORY COUNCIL ON HISTORIC PRESERVATION

401 F STREET NW, WASHINGTON, DC 20001-2637

P: 202.517.0218 | F: 202.517.6381 | E: MNABER@ACHP.GOV

_

From: Linda Weintraut [mailto:linda@weintrautinc.com]
Sent: Friday, May 06, 2016 11:31 AM
To: Bob Canida; info@jchshc.org; doofendugel@yahoo.com; Curran, Michele; camille Fife; madisonmainstreetprogram@gmail.com; preservation@madison-in.gov; Link Ludington; tkmadison@yahoo.com; peter@woodburnkyle.com; Gregory Sekula; Walnut Street Initiative Madison; John Staicer; V. Young; Eric Oosahwee-Voss; sheila.chingwa@gtbindians.com; Kelsey Noack Myers; lpappenfort@peoriatribe.com; Jan Vetrhus; Peggy Vlerebome; Roxi Burns; riverboatmadison@aim.com; Diane Hunter; Meghan Hesse; TeriLu Adler; Carr, John; Zoll, Mitchell K; Chad Slider; Elizabeth Merritt; 3316rowland; MaryAnn Naber
Cc: Adam Burns; michelle.allen@dot.gov; Patrick Carpenter; Miller, Shaun (INDOT); Mary E. Kennedy; Bethany Natali; Whitney.Pflanzer@borshoff.biz; Erin Pipkin, APR; Owen Lindauer; carolyn.nelson@dot.gov; Carlin, Whitney; Kumar, Anuradha
Subject: SR 421 New Road Project Madison Approach (Des No. 1400918; DHPA No. 18317)

Dear Consulting Parties,

It has been awhile since we have communicated, and I wish to update you on this project.

As you are aware, at our last meeting there were 8 build alternatives and a no-build alternative under review.

Over the past months, comments made by consulting parties and the public have been taken into consideration; this process has resulted in the following alternatives are being carried forward (the no-build and alternatives 4, 6, and 8).

Next Steps and anticipated schedule for Section 106 and Section 110:

- Weintraut & Associates is currently preparing an Effects Letter anticipated to be distributed to consulting parties in May or early June. There will be a thirty (30) day review and comment period for this document.
- An archaeological reconnaissance will begin shortly.
- After that (likely mid-summer), an 800.11(e) document will be distributed and a consulting party meeting will be held.

Thank you for your participation in this project.

Linda

--

Linda Weintraut, Ph.D.

Weintraut & Associates, Inc.

PO Box 5034

4649 Northwestern Drive

From: Linda Weintraut <linda@weintrautinc.com>
Date: May 6, 2016 at 2:09:33 PM EDT
To: Jan Vetrhus <janvetrhus@gmail.com>
Cc: camille fife <camillefife@aol.com>, peggy vlerebome <pvlereb@cinergymetro.net>, Teri Adler <teri.lu@vrhabilis.com>, Michele Curran <Michele_Curran@nps.gov>, Adam Burns <aburns@cmtengr.com>
Subject: Re: SR 421 New Road Project Madison Approach (Des No. 1400918; DHPA No. 18317)

Jan,

As you know, things can change, as the alternatives move forward so I caution you in decision making based on a screening report.

I have attached the meeting summary from our last meeting that had the exhibits attached to refresh your memory of the alternatives. And I will check on the status of any special studies.

Have a good weekend. Linda

On Fri, May 6, 2016 at 12:49 PM, Jan Vetrhus <janvetrhus@gmail.com> wrote:

> Linda, thanks for the update. I heard after the fact that there was a meeting in the city recently.
>
> I've looked back through the 3 selected alternatives - can you give them the short-hand titles that we were using in the meetings? I think #4 is the overpass; #6 is the ground level with traffic light. And #8 is the roundabout (I don't remember anyone at any of the 4 meetings I attended wanting that version!).
>
> Also, since I own the house on the NE corner of 2nd & Baltimore, can I go ahead and do some long term maintenance with the confidence that the alternatives that would take my house are now completely off the table? My contractor has been asking if he can start - I've told him not till after I know the decision about the bridge approach.
>
> We had also asked several times if we could get a noise & vibration analysis of the overpass & ground level options before any decisions are made - will that be part of the effects letter that you are sending out?

Looking forward to the next meeting.

Jan Vetrhus
701 E. 2nd Street
Madison, IN

On May 6, 2016, at 11:30 AM, Linda Weintraut wrote:

> Dear Consulting Parties,
>
> It has been awhile since we have communicated, and I wish to update you on this project.
>
> As you are aware, at our last meeting there were 8 build alternatives and a no-build alternative under review.
>
> Over the past months, comments made by consulting parties and the public have been taken into consideration; this process has resulted in the following alternatives are being carried forward (the no-build and alternatives 4, 6, and 8).
>
> Next Steps and anticipated schedule for Section 106 and Section 110:
>
> - Weintraut & Associates is currently preparing an Effects Letter anticipated to be distributed to consulting parties in May or early June. There will be a thirty (30) day review and comment period for this document.
> - An archaeological reconnaissance will begin shortly.
> - After that (likely mid-summer), an 800.11(e) document will be distributed and a consulting party meeting will be held.
>
> Thank you for your participation in this project.
>
> Linda
> --
> Linda Weintraut, Ph.D.
> Weintraut & Associates, Inc.
> PO Box 5034
> 4649 Northwestern Drive
> Zionsville, Indiana 46077
> 317.733.9770 ext. 310
>
> www.weintrautinc.com

--
Linda Weintraut, Ph.D.
Weintraut & Associates, Inc.

From: Carpenter, Patrick A [mailto:PACarpenter@indot.IN.gov]
Sent: Monday, May 16, 2016 11:58 AM
To: Adam Burns <aburns@cmtengr.com>; michelle.allen@dot.gov
Cc: Carlin, Whitney <WCarlin@indot.IN.gov>; Kennedy, Mary <MKENNEDY@indot.IN.gov>; Miller, Shaun (INDOT) <smiller@indot.IN.gov>; Linda Weintraut <linda@weintrautinc.com>; Kumar, Anuradha <akumar@indot.IN.gov>; Bethany Natali <bethany@weintrautinc.com>
Subject: RE: US 421 Des. No 1400918 Revised

FYI

Michelle Curran called me this morning. She indicated that she is ok with Alt. 6 and 8, but not Alt. 4. I told her she would be receiving an effects memo soon with details and she can formally comment with that review. She also mentioned that she would like better visuals than what was provided at the consulting parties meeting, size 11x17 if possible.

Patrick Carpenter

Section 106 Specialist, Cultural Resources Office

Environmental Services

Indiana Department of Transportation

100 N Senate Ave., IGCN-Rm. N-642

Indianapolis, IN 46204-2216

317-233-2061

CRAWFORD, MURPHY & TILLY
Engineers and Consultants
8790 Purdue Road
Indianapolis, IN 46268
(317) 298-4500 • (317) 298-4503 Fax

LETTER OF TRANSMITTAL

Date: 5/17/2016	Job No.: INDOT Des. 1400918

Attention: Michelle Curran

Re: Project 421 Exhibits and Renderings

To: Michelle Curran
National Parks Service, Midwest Regional Office
601 Riverfront Drive
Omaha, NE 68102

WE ARE SENDING YOU ☒ Attached ☐ Under separate cover via _____ the following items:

☐ Shop drawings ☐ Prints ☐ Plans ☐ Samples ☐ Specifications

☐ Copy of letter ☐ Change order ☐ _____

COPIES	DATE	NO.	DESCRIPTION
1	5/17/2016	1	Alternative Exhibits, 11”x17”
1	5/17/2016	2	Alternative Renderings, 8.5”x11”

THESE ARE TRANSMITTED as checked below:

☐ For approval ☐ Approved as submitted ☐ Resubmit _____ copies for approval

☐ For your use ☐ Approved as noted ☐ Submit _____ copies for distribution

☒ As requested ☐ Returned for corrections ☐ Return _____ corrected prints

☐ For review and comment ☐ _____

☐ FOR BIDS DUE _____ ☐ PRINTS RETURNED AFTER LOAN TO US

REMARKS

COPY TO _____

SIGNED _____

If enclosures are not as noted, kindly notify us at once.

SR 421 New Road Project Madison Approach (Des No. 1400918; DHPA No. 18317)

1 message

Linda Weintraut <linda@weintrautinc.com> Wed, Jun 8, 2016 at 5:57 PM

To: Bob Canida <bob@canidadentistry.com>, info@jchshc.org, doofendugel@yahoo.com, "Curran, Michele" <michele_curran@nps.gov>, camille Fife <camillefife@aol.com>, madisonmainstreetprogram@gmail.com, preservation@madison-in.gov, Link Ludington <linkludington@gmail.com>, tkmadison@yahoo.com, peter@woodburnkyle.com, Greg Sekula <gsekula@indianalandmarks.org>, Walnut Street Initiative Madison <hmi@historicmadisoninc.com>, John Staicer <john@historicmadisoninc.com>, "V. Young" <artezian01@yahoo.com>, eoosahwee-voss@unitedkeetoowahband.org, sheila.chingwa@gtbindians.com, Kelsey Noack Myers <kelsey.myers@nei-yahw.com>, lpappenfort@peoriatribe.com, Jan Vetrhus <janvetrhus@gmail.com>, Peggy Vlerebome <pvlereb@cinergymetro.net>, Roxi Burns <burns.roxi@gmail.com>, riverboatmadison@aim.com, Diane Hunter <dhunter@miamination.com>, mhesse@achp.gov, TeriLu Adler <luterilu62@gmail.com>, "Carr, John" <jcarr@dnr.in.gov>, "Zoll, Mitchell K" <MZoll@dnr.in.gov>, "Slider, Chad" <CSlider@dnr.in.gov>, Betsy Merritt <emerritt@savingplaces.org>, 3316rowland <3316rowland@gmail.com>, mnaber@achp.gov

Cc: Adam Burns <aburns@cmtengr.com>, "michelle.allen@dot.gov" <michelle.allen@dot.gov>, "Carpenter, Patrick A" <PACarpenter@indot.in.gov>, "Miller, Shaun (INDOT)" <smiller@indot.in.gov>, "Kennedy, Mary" <mkennedy@indot.in.gov>, Bethany Natali <bethany@weintrautinc.com>, "Whitney.Pflanzer@borshoff.biz" <Whitney.Pflanzer@borshoff.biz>, "Erin Pipkin, APR" <erin.pipkin@borshoff.biz>, owen.lindauer@dot.gov, carolyn.nelson@dot.gov, "Carlin, Whitney" <WCarlin@indot.in.gov>, "Kumar, Anuradha" <akumar@indot.in.gov>

Dear Consulting Party,

As a project update, we are providing all of you with the attached copy of the meeting summary from the Citizen's Advisory Committee (CAC) meeting held last month, and we have posted the Alternatives Graphics presented at the last consulting party meeting to IN-SCOPE. You may access the Alternatives Graphics at the IN-SCOPE website located at the following link.

http://netservices.indot.in.gov/Section106Documents/Default.aspx

The Des. No. is the most efficient search term, once in IN-SCOPE

These Graphics have been updated slightly to take into account comments made at that meeting regarding clarity of presentation. (Paper copies are available upon request.)

Since my last email communication of May 6, 2016, the project team has received a request for both items from the National Park Service. (As you are aware, the CAC and the Consultation Process for Cultural Resources have different roles in the process so these CAC minutes are not for comment but for your information only.)

Next Steps and anticipated schedule for Section 106 and Section 110:

· Effects Letter anticipated to be distributed to consulting parties in late June. There will be a thirty (30) day review and comment

period for this document.
· A consulting party meeting will be held during the first half of August.
· An archaeological reconnaissance has been completed, and a report is being prepared. (This report will be distributed to the State Historic Preservation Officer and to Tribes.)

Thank you for your participation in this project. Linda

--
Linda Weintraut, Ph.D.
Weintraut & Associates, Inc.
PO Box 5034
4649 Northwestern Drive
Zionsville, Indiana 46077
317.733.9770 ext. 310

www.weintrautinc.com

CAC_Meeting_3_Minutes_May_2016.pdf
79K

---------- Forwarded message ----------
From: **Jess Butler** <preservation@madison-in.gov>
Date: Thu, Jun 9, 2016 at 12:28 PM
Subject: RE: SR 421 New Road Project Madison Approach
To: John Staicer <john@historicmadisoninc.com>, "Curran, Michele" <michele_curran@nps.gov>, Linda Weintraut <linda@weintrautinc.com>
Cc: Bob Canida <bob@canidadentistry.com>, camille Fife <camillefife@aol.com>, "madisonmainstreetprogram@gmail.com" <madisonmainstreetprogram@gmail.com>, Greg Sekula <gsekula@indianalandmarks.org>, Adam Burns <aburns@cmtengr.com>

Good day. I strongly support Alternative #8. I am serving Madison as Preservation Planner, currently. My education is in land use planning and urban design. Next week is my last week in this position, and therefore I will no longer be a party invited to these discussions. I will remain involved where the public is invited. Before I leave, I want to be clear that I support Alternative #8 for the primary reasons of:

1) Pulling the intersection to the east of the Landmark District, therefore causing a less negative impact of detachment (of east-of-bridge properties)

2) Traffic calming (this alternative isn't matched by any other in its safety analysis)

3) Scale (I do not support the alternatives that raise roadway to a grade that is not pedestrian scale)

4) Design opportunity for a true gateway

These are my brief thoughts on the proposed alternatives. I wish you all the best in further study of them.

Sincerely,

Jessica Butler

Jess Butler

Preservation Planner

City of Madison, IN

812-274-2750

C) 812-701-0002

Office Hours:

Monday, Wednesday, Thursday: 9-1

Tuesday: 12-4

--
Linda Weintraut, Ph.D.
Weintraut & Associates, Inc.
PO Box 5034
4649 Northwestern Drive
Zionsville, Indiana 46077
317.733.9770 ext. 310

Re: SR 421 New Road Project Madison Approach (Des No. 1400918; DHPA No. 18317)

1 message

Curran, Michele <michele_curran@nps.gov> Thu, Jun 9, 2016 at 9:32 AM
To: Linda Weintraut <linda@weintrautinc.com>
Cc: Bob Canida <bob@canidadentistry.com>, "info@jchshc.org" <info@jchshc.org>, doofendugel@yahoo.com, camille Fife <camillefife@aol.com>, madisonmainstreetprogram@gmail.com, Julianne Steger <preservation@madison-in.gov>, Link Ludington <linkludington@gmail.com>, tkmadison@yahoo.com, peter@woodburnkyle.com, Greg Sekula <gsekula@indianalandmarks.org>, Walnut Street Initiative Madison <hmi@historicmadisoninc.com>, John Staicer <john@historicmadisoninc.com>, "V. Young" <artezian01@yahoo.com>, eoosahwee-voss@unitedkeetoowahband.org, sheila.chingwa@gtbindians.com, Kelsey Noack Myers <kelsey.myers@nei-yahw.com>, lpappenfort@peoriatribe.com, Jan Vetrhus <janvetrhus@gmail.com>, Peggy Vlerebome <pvlereb@cinergymetro.net>, Roxi Burns <burns.roxi@gmail.com>, riverboatmadison@aim.com, Diane Hunter <dhunter@miamination.com>, mhesse@achp.gov, TeriLu Adler <luterilu62@gmail.com>, "Carr, John" <jcarr@dnr.in.gov>, "Zoll, Mitchell K" <MZoll@dnr.in.gov>, "Slider, Chad" <CSlider@dnr.in.gov>, Betsy Merritt <emerritt@savingplaces.org>, 3316rowland <3316rowland@gmail.com>, mnaber@achp.gov, Adam Burns <aburns@cmtengr.com>, "michelle.allen@dot.gov" <michelle.allen@dot.gov>, "Carpenter, Patrick A" <PACarpenter@indot.in.gov>, "Miller, Shaun (INDOT)" <smiller@indot.in.gov>, "Kennedy, Mary" <mkennedy@indot.in.gov>, Bethany Natali <bethany@weintrautinc.com>, "Whitney.Pflanzer@borshoff.biz" <Whitney.Pflanzer@borshoff.biz>, "Erin Pipkin, APR" <erin.pipkin@borshoff.biz>, owen.lindauer@dot.gov, carolyn.nelson@dot.gov, "Carlin, Whitney" <WCarlin@indot.in.gov>, "Kumar, Anuradha" <akumar@indot.in.gov>

Linda,
I think it is crucial that the Section 106 consulting parties have the opportunity to meet prior to the determination of a final alternative. We have not had a meeting since the presentation of nine alternatives and it is important that the Section 106 consultation includes further discussion on the final four alternatives.

Michele J. Curran, Ph.D. / Historian
National Historic Landmarks Program
National Park Service / Midwest Regional Office
601 Riverfront Drive / Omaha, Nebraska 68102

Phone: *402.661.1954* ***/ Fax:*** *402.661.1955*
Email: *michele_curran@nps.gov*

Re: SR 421 New Road Project Madison Approach (Des No. 1400918; DHPA No. 18317)

1 message

Linda Weintraut <linda@weintrautinc.com> Thu, Jun 9, 2016 at 10:37 AM
To: "Curran, Michele" <michele_curran@nps.gov>
Cc: Bob Canida <bob@canidadentistry.com>, "info@jchshc.org" <info@jchshc.org>, doofendugel@yahoo.com, camille Fife <camillefife@aol.com>, madisonmainstreetprogram@gmail.com, Julianne Steger <preservation@madison-in.gov>, Link Ludington <linkludington@gmail.com>, tkmadison@yahoo.com, peter@woodburnkyle.com, Greg Sekula <gsekula@indianalandmarks.org>, Walnut Street Initiative Madison <hmi@historicmadisoninc.com>, John Staicer <john@historicmadisoninc.com>, "V. Young" <artezian01@yahoo.com>, eoosahwee-voss@unitedkeetoowahband.org, sheila.chingwa@gtbindians.com, Kelsey Noack Myers <kelsey.myers@nei-yahw.com>, lpappenfort@peoriatribe.com, Jan Vetrhus <janvetrhus@gmail.com>, Peggy Vlerebome <pvlereb@cinergymetro.net>, Roxi Burns <burns.roxi@gmail.com>, riverboatmadison@aim.com, Diane Hunter <dhunter@miamination.com>, mhesse@achp.gov, TeriLu Adler <luterilu62@gmail.com>, "Carr, John" <jcarr@dnr.in.gov>, "Zoll, Mitchell K" <MZoll@dnr.in.gov>, "Slider, Chad" <CSlider@dnr.in.gov>, Betsy Merritt <emerritt@savingplaces.org>, 3316rowland <3316rowland@gmail.com>, mnaber@achp.gov, Adam Burns <aburns@cmtengr.com>, "michelle.allen@dot.gov" <michelle.allen@dot.gov>, "Carpenter, Patrick A" <PACarpenter@indot.in.gov>, "Miller, Shaun (INDOT)" <smiller@indot.in.gov>, "Kennedy, Mary" <mkennedy@indot.in.gov>, Bethany Natali <bethany@weintrautinc.com>, "Whitney.Pflanzer@borshoff.biz" <Whitney.Pflanzer@borshoff.biz>, "Erin Pipkin, APR" <erin.pipkin@borshoff.biz>, owen.lindauer@dot.gov, carolyn.nelson@dot.gov, "Carlin, Whitney" <WCarlin@indot.in.gov>, "Kumar, Anuradha" <akumar@indot.in.gov>

Michele,

I agree; it is important to have a meeting to discuss the four alternatives. And we will have that meeting in early August.

It is my understanding that there will be a CAC meeting at roughly the same time as the Consulting Party meeting (similar to the timing for the Consulting Party and CAC meetings in February.) The preferred alternative will not be chosen until after the discussions with the CAC and the Consulting Parties.

We would have liked to have the meeting earlier in the summer but coordinating schedules pushed the date to early August.

Linda

On Thu, Jun 9, 2016 at 9:32 AM, Curran, Michele <michele_curran@nps.gov> wrote:

> Linda,
> I think it is crucial that the Section 106 consulting parties have the opportunity to meet prior to the determination of a final alternative. We have not had a meeting since the presentation of nine alternatives and it is important that the Section 106 consultation includes further discussion on the final four alternatives.
>
> ***Michele J. Curran, Ph.D. / Historian***
> ***National Historic Landmarks Program***
> ***National Park Service / Midwest Regional Office***
> ***601 Riverfront Drive / Omaha, Nebraska 68102***
>
> ***Phone:*** *402.661.1954* ***/ Fax:*** *402.661.1955*
> ***Email:*** *michele_curran@nps.gov*

RE: SR 421 New Road Project Madison Approach (Des No. 1400918; DHPA No. 18317)

1 message

John Staicer <john@historicmadisoninc.com> Thu, Jun 9, 2016 at 10:58 AM

To: "Curran, Michele" <michele_curran@nps.gov>, Linda Weintraut <linda@weintrautinc.com>

Cc: Bob Canida <bob@canidadentistry.com>, info@jchshc.org, doofendugel@yahoo.com, camille Fife <camillefife@aol.com>, madisonmainstreetprogram@gmail.com, Julianne Steger <preservation@madison-in.gov>, Link Ludington <linkludington@gmail.com>, tkmadison@yahoo.com, peter@woodburnkyle.com, Greg Sekula <gsekula@indianalandmarks.org>, Walnut Street Initiative Madison <hmi@historicmadisoninc.com>, "V. Young" <artezian01@yahoo.com>, eoosahwee-voss@unitedkeetoowahband.org, sheila.chingwa@gtbindians.com, Kelsey Noack Myers <kelsey.myers@nei-yahw.com>, lpappenfort@peoriatribe.com, Jan Vetrhus <janvetrhus@gmail.com>, Peggy Vlerebome <pvlereb@cinergymetro.net>, Roxi Burns <burns.roxi@gmail.com>, riverboatmadison@aim.com, Diane Hunter <dhunter@miamination.com>, mhesse@achp.gov, TeriLu Adler <luterilu62@gmail.com>, "Carr, John" <jcarr@dnr.in.gov>, "Zoll, Mitchell K" <MZoll@dnr.in.gov>, "Slider, Chad" <CSlider@dnr.in.gov>, Betsy Merritt <emerritt@savingplaces.org>, 3316rowland <3316rowland@gmail.com>, mnaber@achp.gov, Adam Burns <aburns@cmtengr.com>, michelle.allen@dot.gov, "Carpenter, Patrick A" <PACarpenter@indot.in.gov>, "Miller, Shaun (INDOT)" <smiller@indot.in.gov>, "Kennedy, Mary" <mkennedy@indot.in.gov>, Bethany Natali <bethany@weintrautinc.com>, Whitney.Pflanzer@borshoff.biz, "Erin Pipkin, APR" <erin.pipkin@borshoff.biz>, owen.lindauer@dot.gov, carolyn.nelson@dot.gov, "Carlin, Whitney" <WCarlin@indot.in.gov>, "Kumar, Anuradha" <akumar@indot.in.gov>

Linda,

I agree with Michele we need to meet and talk again sooner rather than later. It's important to have an **in-person** dialogue with all the parties about the merits and drawbacks of each of these choices. Consultation it a process, not a one-and-done meeting. I'm frankly surprised we did not have a meeting in conjunction with the recent CAC meeting.

John

US 421 New Road Project (Des. No.: 1400918; DHPA No.: 18317)

1 message

Linda Weintraut <linda@weintrautinc.com> Tue, Jun 28, 2016 at 4:15 PM

To: Bob Canida <bob@canidadentistry.com>, info@jchshc.org, doofendugel@yahoo.com, "Curran, Michele" <michele_curran@nps.gov>, camille Fife <camillefife@aol.com>, madisonmainstreetprogram@gmail.com, Julianne Steger <preservation@madison-in.gov>, Link Ludington <linkludington@gmail.com>, tkmadison@yahoo.com, peter@woodburnkyle.com, Greg Sekula <gsekula@indianalandmarks.org>, Walnut Street Initiative Madison <hmi@historicmadisoninc.com>, John Staicer <john@historicmadisoninc.com>, "V. Young" <artezian01@yahoo.com>, eoosahwee-voss@unitedkeetoowahband.org, sheila.chingwa@gtbindians.com, Kelsey Noack Myers <kelsey.myers@nei-yahw.com>, lpappenfort@peoriatribe.com, Jan Vetrhus <janvetrhus@gmail.com>, Peggy Vlerebome <pvlereb@cinergymetro.net>, Roxi Burns <burns.roxi@gmail.com>, riverboatmadison@aim.com, Diane Hunter <dhunter@miamination.com>, mhesse@achp.gov, TeriLu Adler <luterilu62@gmail.com>, "Carr, John" <jcarr@dnr.in.gov>, "Zoll, Mitchell K" <MZoll@dnr.in.gov>, "Slider, Chad" <CSlider@dnr.in.gov>, Betsy Merritt <emerritt@savingplaces.org>, 3316rowland <3316rowland@gmail.com>, mnaber@achp.gov, "Kumar, Anuradha" <akumar@indot.in.gov>

Cc: Adam Burns <aburns@cmtengr.com>, "michelle.allen@dot.gov" <michelle.allen@dot.gov>, "Carpenter, Patrick A" <PACarpenter@indot.in.gov>, "Miller, Shaun (INDOT)" <smiller@indot.in.gov>, "Kennedy, Mary" <mkennedy@indot.in.gov>, Bethany Natali <bethany@weintrautinc.com>, "Whitney.Pflanzer@borshoff.biz" <Whitney.Pflanzer@borshoff.biz>, "Erin Pipkin, APR" <erin.pipkin@borshoff.biz>, owen.lindauer@dot.gov, carolyn.nelson@dot.gov, "Carlin, Whitney" <WCarlin@indot.in.gov>

Dear Consulting Party,

Since you have indicated your willingness to participate in the consulting party process, Federal Highway Administration is inviting you to attend Consulting Party Meeting No. 3 to be held on:

August 11, 2016

Madison, Indiana.

Since this will be an <u>all-day meeting,</u> we wanted to provide advance notice, even though we do not have a confirmed location for the meeting at this time. Please see attached letter for more details.

The Effects of the US 421 New Road Project (Des. No.: 1400918; DHPA No.: 18317) on Historic Properties is available for your review and comment at the IN-SCOPE website located at the following link:

http://netservices.indot.in.gov/Section106Documents/Default.aspx

The Des. No. is the most efficient search term, once in IN-SCOPE.

We hope to see you on August 11, 2016. Thank you for your participation in this project.

Linda Weintraut, Ph.D.
Weintraut & Associates, Inc.
PO Box 5034
4649 Northwestern Drive

Zionsville, Indiana 46077
317.733.9770 ext. 310

www.weintrautinc.com

MadisonApproaches_Des1400918_CP Mtg 3_draft 2016 0628_wletterhead_.pdf
57K

INDIANA DEPARTMENT OF TRANSPORTATION

100 North Senate Avenue
Room N642
Indianapolis, Indiana 46204

PHONE: (317) 233-2061
FAX: (317) 232-4929

Michael R. Pence, Governor
Brandye L. Hendrickson, Commissioner

June 28, 2016

Dear Consulting Party:

The Indiana Department of Transportation (INDOT) with funding from the Federal Highway Administration (FHWA) is planning a project in Madison, Jefferson County, Indiana: US 421 New Road Construction (Des. No.: 1400918). Section 106 of the National Historic Preservation Act requires federal agencies to take into account the effects of their undertaking on historic properties (both archaeological and structures). In addition, Section 110 of the National Historic Preservation Act provides guidance on the special requirements for protecting NHLs, including statutory requirements and resolution of adverse effects.

As we discussed at our last consulting party meeting held on February 16, 2016, Weintraut & Associates has identified two aboveground historic properties within the project's Area of Potential Effects: the Madison, Indiana National Historic Landmark District and the Madison National Register of Historic Places District.

Since that time, the project consultants have prepared a Memorandum on the **Effects of the US 421 New Road Project (Des. No.: 1400918; DHPA No.: 18317) on Historic Properties** that discusses the effects on the four alternatives carried forward, upon the two historic districts. The four alternatives carried forward are: 1, 4, 6b, and 8. As a willing consulting party, you are invited to review and comment on this Memorandum.

As you read this document, it is important to keep in mind the National Park Service (NPS)'s definition of a district: "a district possesses a significant concentration, linkage, or continuity of sites, buildings, structures, or objects united historically or aesthetically by plan or physical development." In other words, a district is more than just a collection of individual resources. At our next consulting party meeting, we will discuss the effects of the four alternatives on the two historic districts.

Since you have indicated your willingness to participate in the consulting party process, FHWA is inviting you to attend Consulting Party Meeting No. 3 to be held on:

August 11, 2016
Madison, Indiana.

Since this will be an <u>all-day meeting</u> we wanted to provide advance notice, even though we do not have a confirmed location at this time. If you are unable to attend in person, a conference line will be reserved and you will be sent a call in number. An agenda will be sent in advance of the meeting.

At this meeting, project consultants will discuss Section 4(f) of the US Department of Transportation Act (1966). Per Section 4(f), once it has been determined that there are no prudent and feasible avoidance alternatives, FHWA may approve only the alternative that causes the least overall harm to historic properties. Since avoidance alternatives have been found not to be prudent and feasible. Therefore, with the exception of the "No Build" alternative, all alternatives being carried forward result in adverse effects to the Madison, Indiana National Historic Landmark District and the Madison National Register of Historic Places District. Therefore, concurrently with the Section 106 consultation process, we are seeking the opinion of the SHPO and NPS as Officials with Jurisdiction, on which alternative results in the Least Overall Harm. The 4(f) analysis is ongoing, and the written document will not be available for review until later in the

year. For more information on Section 4 (f) please refer to the following website: https://www.environment.fhwa.dot.gov/4f/4fpolicy.asp.

You may access the **Effects of the US 421 New Road Project (Des. No.: 1400918; DHPA No.: 18317) on Historic Properties** at the IN-SCOPE website located at the following link.

http://netservices.indot.in.gov/Section106Documents/Default.aspx

The Des No. is the most efficient search term, once in IN-SCOPE. Any invited consulting party who makes such a request to Weintraut & Associates within seven (7) days of receipt of this notification will receive a hard copy of this material.

To facilitate the development of this project, please respond with comments on the **Effects of the US 421 New Road Project (Des. No.: 1400918; DHPA No.: 18317) on Historic Properties** prior to **August 21, 2016.** Please direct any comments to Linda Weintraut via email at linda@weintrautinc.com or 317-733-9770.

Tribal contacts may contact Shaun Miller at smiller.indot.in.gov or 317-233-2061or Michelle Allen at FHWA at michelle.allen@dot.gov or 317-226-7344.

We hope to see you at the consulting party meeting on August 11, 2016. Thank you for your participation in this project.

Best regards,

Anuradha Kumar
Manager, Cultural Resources Office
INDOT Environmental Services

Enclosure

Emc: Michelle Allen, FHWA
Linda Weintraut, Weintraut & Associates
Adam Burns, Crawford Murphy & Tilly

US 421 New Project (Des. No. 1400918) MEETING UPDATE

1 message

Linda Weintraut <linda@weintrautinc.com> Fri, Jul 15, 2016 at 8:37 AM

To: Bob Canida <bob@canidadentistry.com>, info@jchshc.org, doofendugel@yahoo.com, "Curran, Michele" <michele_curran@nps.gov>, camille Fife <camillefife@aol.com>, madisonmainstreetprogram@gmail.com, Julianne Steger <preservation@madison-in.gov>, Link Ludington <linkludington@gmail.com>, tkmadison@yahoo.com, peter@woodburnkyle.com, Greg Sekula <gsekula@indianalandmarks.org>, Walnut Street Initiative Madison <hmi@historicmadisoninc.com>, John Staicer <john@historicmadisoninc.com>, "V. Young" <artezian01@yahoo.com>, eoosahwee-voss@unitedkeetoowahband.org, sheila.chingwa@gtbindians.com, Kelsey Noack Myers <kelsey.myers@nei-yahw.com>, lpappenfort@peoriatribe.com, Jan Vetrhus <janvetrhus@gmail.com>, Peggy Vlerebome <pvlereb@cinergymetro.net>, Roxi Burns <burns.roxi@gmail.com>, riverboatmadison@aim.com, Diane Hunter <dhunter@miamination.com>, mhesse@achp.gov, TeriLu Adler <luterilu62@gmail.com>, "Carr, John" <jcarr@dnr.in.gov>, "Zoll, Mitchell K" <MZoll@dnr.in.gov>, "Slider, Chad" <CSlider@dnr.in.gov>, Betsy Merritt <emerritt@savingplaces.org>, 3316rowland <3316rowland@gmail.com>, mnaber@achp.gov

Cc: Adam Burns <aburns@cmtengr.com>, "michelle.allen@dot.gov" <michelle.allen@dot.gov>, "Carpenter, Patrick A" <PACarpenter@indot.in.gov>, "Miller, Shaun (INDOT)" <smiller@indot.in.gov>, "Kennedy, Mary" <mkennedy@indot.in.gov>, Bethany Natali <bethany@weintrautinc.com>, "Whitney.Pflanzer@borshoff.biz" <Whitney.Pflanzer@borshoff.biz>, "Erin Pipkin, APR" <erin.pipkin@borshoff.biz>, carolyn.nelson@dot.gov, "Carlin, Whitney" <WCarlin@indot.in.gov>, david.clarke@dot.gov, "Stettler, Devin" <devins@ucindy.com>, Cassie Reiter <creiter@cmtengr.com>

Dear Consulting Party,

First, a reminder that the memorandum titled **Effects of the US 421 New Road Project (Des. No.: 1400918; DHPA No.: 18317) on Historic Properties** may be found on the IN-SCOPE website located at the following link: http://netservices.indot.in.gov/Section106Documents/Default.aspx The Des. No. is the most efficient search term, once in IN-SCOPE. Please review the document before the meeting to facilitate discussion.

I have attached the agenda for the next consulting party meeting. **The meeting will be held on August 11, 2016 at 9:00 am in the City Center, Chamber Room**.

It will be an **all-day meeting**. If you are traveling from out of town, you may wish to consider arriving the day before.

We plan on pre-ordering lunches. If you have dietary restrictions, please let us know so that we are able to accommodate them.

We also request that you let us know that you are attending so that we may order the appropriate number of lunches.

Please dress comfortably. We plan on walking the project area as part of the meeting.

If you are unable to attend but would like to participate, please let us know. We will provide a call-in number.

Thank you for your participation in this project.

Linda

--

Linda Weintraut, Ph.D.
Weintraut & Associates, Inc.
PO Box 5034
4649 Northwestern Drive
Zionsville, Indiana 46077
317.733.9770 ext. 310

www.weintrautinc.com

Consulting Party Meeting Agenda 3 Draft July 14 2016.pdf
111K

Re: US 421 New Project (Des. No. 1400918) MEETING UPDATE

1 message

Jan Vetrhus <janvetrhus@gmail.com> Mon, Jul 18, 2016 at 5:54 PM
To: Linda Weintraut <linda@weintrautinc.com>
Cc: Bob Canida <bob@canidadentistry.com>, info@jchshc.org, doofendugel@yahoo.com, "Curran, Michele" <michele_curran@nps.gov>, camille Fife <camillefife@aol.com>, madisonmainstreetprogram@gmail.com, Julianne Steger <preservation@madison-in.gov>, Link Ludington <linkludington@gmail.com>, tkmadison@yahoo.com, peter@woodburnkyle.com, Greg Sekula <gsekula@indianalandmarks.org>, Walnut Street Initiative Madison <hmi@historicmadisoninc.com>, John Staicer <john@historicmadisoninc.com>, "V. Young" <artezian01@yahoo.com>, eoosahwee-voss@unitedkeetoowahband.org, sheila.chingwa@gtbindians.com, Kelsey Noack Myers <kelsey.myers@nei-yahw.com>, lpappenfort@peoriatribe.com, Peggy Vlerebome <pvlereb@cinergymetro.net>, Roxi Burns <burns.roxi@gmail.com>, riverboatmadison@aim.com, Diane Hunter <dhunter@miamination.com>, mhesse@achp.gov, TeriLu Adler <luterilu62@gmail.com>, "Carr, John" <jcarr@dnr.in.gov>, "Zoll, Mitchell K" <MZoll@dnr.in.gov>, "Slider, Chad" <CSlider@dnr.in.gov>, Betsy Merritt <emerritt@savingplaces.org>, 3316rowland <3316rowland@gmail.com>, mnaber@achp.gov, Adam Burns <aburns@cmtengr.com>, "michelle.allen@dot.gov" <michelle.allen@dot.gov>, "Carpenter, Patrick A" <PACarpenter@indot.in.gov>, "Miller, Shaun (INDOT)" <smiller@indot.in.gov>, "Kennedy, Mary" <mkennedy@indot.in.gov>, Bethany Natali <bethany@weintrautinc.com>, "Whitney.Pflanzer@borshoff.biz" <Whitney.Pflanzer@borshoff.biz>, "Erin Pipkin, APR" <erin.pipkin@borshoff.biz>, carolyn.nelson@dot.gov, "Carlin, Whitney" <WCarlin@indot.in.gov>, david.clarke@dot.gov, "Stettler, Devin" <devins@ucindy.com>, Cassie Reiter <creiter@cmtengr.com>

Linda, the agenda for the meeting on August 11th talks about walking through the area and discussing mitigation..... it doesn't include anything about the choice of alternatives or about making slight changes to any of the alternatives. Has someone already selected the preferred alternative?

Where does the CAC come into the discussion again? They are not on the agenda for the 11th. I thought based on feedback from May that we were going to work together. The owner of the liquor store and the other business owners affected were not been included in the May discussion or invited to the August meeting.

In addition to the height of the bridge and trucks, the lighting and the hight of the retaining walls, has INDOT provided the requested noise and vibration analysis - it's talked about in general terms in this report.

Given INDOT's recent paving project, we can see how little thought is given to the historic district by the contractors actually doing the work. What will INDOT do to make sure that contractors are sensitive to vibration on the buildings in the historic district? It doesn't do much good to monitor vibration - the point is to reduce it during construction.

Drainage is still a problem, as well. Closing up the culverts and building walls, where water flows naturally from the hillside to the river, cannot be good. We need to understand the drainage plan and its impact on the neighborhood. I didn't see any drainage plans in the alternatives.

Jan Vetrhus
701 E. 2nd Street

On Jul 15, 2016, at 8:37 AM, Linda Weintraut wrote:

> Dear Consulting Party,
>
> First, a reminder that the memorandum titled **Effects of the US 421 New Road Project (Des. No.: 1400918; DHPA No.: 18317) on Historic Properties** may be found on the IN-SCOPE website located at the following link: http://netservices.indot.in.gov/Section106Documents/Default.aspx The Des. No. is the most efficient search term, once in IN-SCOPE. Please review the document before the meeting to facilitate discussion.
>
> I have attached the agenda for the next consulting party meeting. **The meeting will be held on August 11, 2016 at 9:00 am in the City Center, Chamber Room**.
>
> It will be an **all-day meeting**. If you are traveling from out of town, you may wish to consider arriving the day before.
>
> We plan on pre-ordering lunches. If you have dietary restrictions, please let us know so that we are able to accommodate them.
>
> **We also request that you let us know that you are attending** so that we may order the appropriate number of lunches.
>
> Please dress comfortably. We plan on walking the project area as part of the meeting.
>
> If you are unable to attend but would like to participate, please let us know. We will provide a call-in number.
>
> Thank you for your participation in this project.
>
> Linda
>
> --
> Linda Weintraut, Ph.D.
> Weintraut & Associates, Inc.
> PO Box 5034
> 4649 Northwestern Drive
> Zionsville, Indiana 46077
> 317.733.9770 ext. 310
>
> www.weintrautinc.com
>
> <Consulting Party Meeting Agenda 3 Draft July 14 2016.pdf>

Re: US 421 New Project (Des. No. 1400918) MEETING UPDATE

1 message

Curran, Michele <michele_curran@nps.gov> Mon, Jul 18, 2016 at 11:30 AM

To: Linda Weintraut <linda@weintrautinc.com>

Cc: Bob Canida <bob@canidadentistry.com>, "info@jchshc.org" <info@jchshc.org>, doofendugel@yahoo.com, camille Fife <camillefife@aol.com>, madisonmainstreetprogram@gmail.com, Julianne Steger <preservation@madison-in.gov>, Link Ludington <linkludington@gmail.com>, tkmadison@yahoo.com, peter@woodburnkyle.com, Greg Sekula <gsekula@indianalandmarks.org>, Walnut Street Initiative Madison <hmi@historicmadisoninc.com>, John Staicer <john@historicmadisoninc.com>, "V. Young" <artezian01@yahoo.com>, eoosahwee-voss@unitedkeetoowahband.org, sheila.chingwa@gtbindians.com, Kelsey Noack Myers <kelsey.myers@nei-yahw.com>, lpappenfort@peoriatribe.com, Jan Vetrhus <janvetrhus@gmail.com>, Peggy Vlerebome <pvlereb@cinergymetro.net>, Roxi Burns <burns.roxi@gmail.com>, riverboatmadison@aim.com, Diane Hunter <dhunter@miamination.com>, mhesse@achp.gov, TeriLu Adler <luterilu62@gmail.com>, "Carr, John" <jcarr@dnr.in.gov>, "Zoll, Mitchell K" <MZoll@dnr.in.gov>, "Slider, Chad" <CSlider@dnr.in.gov>, Betsy Merritt <emerritt@savingplaces.org>, 3316rowland <3316rowland@gmail.com>, mnaber@achp.gov, Adam Burns <aburns@cmtengr.com>, "michelle.allen@dot.gov" <michelle.allen@dot.gov>, "Carpenter, Patrick A" <PACarpenter@indot.in.gov>, "Miller, Shaun (INDOT)" <smiller@indot.in.gov>, "Kennedy, Mary" <mkennedy@indot.in.gov>, Bethany Natali <bethany@weintrautinc.com>, "Whitney.Pflanzer@borshoff.biz" <Whitney.Pflanzer@borshoff.biz>, "Erin Pipkin, APR" <erin.pipkin@borshoff.biz>, carolyn.nelson@dot.gov, "Carlin, Whitney" <WCarlin@indot.in.gov>, david.clarke@dot.gov, "Stettler, Devin" <devins@ucindy.com>, Cassie Reiter <creiter@cmtengr.com>

Linda,
It is truly important that the IN DOT team find a way to show the height of the bridge and the additional height of transport trucks on top of the bridge as well as lighting on the bridge. I think it is crucial that that is shown, not just illustrated. I have no sure idea of how to accomplish that illustration....other than the use of balloons or some other obvious visual.
Thank you, Michele

Michele J. Curran, Ph.D. / Historian
National Historic Landmarks Program
National Park Service / Midwest Regional Office
601 Riverfront Drive / Omaha, Nebraska 68102

Phone: *402.661.1954* ***/ Fax:*** *402.661.1955*
Email: *michele_curran@nps.gov*

Re: US 421 New Project (Des. No. 1400918) MEETING UPDATE

1 message

Linda Weintraut <linda@weintrautinc.com> Fri, Jul 29, 2016 at 2:16 PM
To: "Curran, Michele" <michele_curran@nps.gov>
Cc: Bob Canida <bob@canidadentistry.com>, "info@jchshc.org" <info@jchshc.org>, doofendugel@yahoo.com, camille Fife <camillefife@aol.com>, madisonmainstreetprogram@gmail.com, Julianne Steger <preservation@madison-in.gov>, Link Ludington <linkludington@gmail.com>, tkmadison@yahoo.com, peter@woodburnkyle.com, Greg Sekula <gsekula@indianalandmarks.org>, Walnut Street Initiative Madison <hmi@historicmadisoninc.com>, John Staicer <john@historicmadisoninc.com>, "V. Young" <artezian01@yahoo.com>, eoosahwee-voss@unitedkeetoowahband.org, sheila.chingwa@gtbindians.com, Kelsey Noack Myers <kelsey.myers@nei-yahw.com>, lpappenfort@peoriatribe.com, Jan Vetrhus <janvetrhus@gmail.com>, Peggy Vlerebome <pvlereb@cinergymetro.net>, Roxi Burns <burns.roxi@gmail.com>, Riverboat Inn & Suites <riverboatmadison@aim.com>, Diane Hunter <dhunter@miamination.com>, mhesse@achp.gov, TeriLu Adler <luterilu62@gmail.com>, "Carr, John" <jcarr@dnr.in.gov>, "Zoll, Mitchell K" <MZoll@dnr.in.gov>, "Slider, Chad" <CSlider@dnr.in.gov>, Betsy Merritt <emerritt@savingplaces.org>, 3316rowland <3316rowland@gmail.com>, MaryAnn Naber <mnaber@achp.gov>, Adam Burns <aburns@cmtengr.com>, "michelle.allen@dot.gov" <michelle.allen@dot.gov>, "Carpenter, Patrick A" <PACarpenter@indot.in.gov>, "Miller, Shaun (INDOT)" <smiller@indot.in.gov>, "Kennedy, Mary" <mkennedy@indot.in.gov>, Bethany Natali <bethany@weintrautinc.com>, "Whitney.Pflanzer@borshoff.biz" <Whitney.Pflanzer@borshoff.biz>, "Erin Pipkin, APR" <erin.pipkin@borshoff.biz>, carolyn.nelson@dot.gov, "Carlin, Whitney" <WCarlin@indot.in.gov>, david.clarke@dot.gov, "Stettler, Devin" <devins@ucindy.com>, Cassie Reiter <creiter@cmtengr.com>

Michele,

Thank you for your email. I agree that it is helpful to have the appropriate aids to help consulting parties visualize the height of walls with traffic. The project team is working on it.

Have a good weekend, Linda

On Mon, Jul 18, 2016 at 11:30 AM, Curran, Michele <michele_curran@nps.gov> wrote:

Linda,
It is truly important that the IN DOT team find a way to show the height of the bridge and the additional height of transport trucks on top of the bridge as well as lighting on the bridge. I think it is crucial that that is shown, not just illustrated. I have no sure idea of how to accomplish that illustration....other than the use of balloons or some other obvious visual.
Thank you, Michele

Michele J. Curran, Ph.D. / Historian
National Historic Landmarks Program
National Park Service / Midwest Regional Office
601 Riverfront Drive / Omaha, Nebraska 68102

Phone: *402.661.1954* ***/ Fax:*** *402.661.1955*
Email: *michele_curran@nps.gov*

On Fri, Jul 15, 2016 at 7:37 AM, Linda Weintraut <linda@weintrautinc.com> wrote:

Dear Consulting Party,

First, a reminder that the memorandum titled **Effects of the US 421 New Road Project (Des. No.: 1400918; DHPA No.: 18317) on Historic Properties** may be found on the IN-SCOPE website located at the following link: http://netservices.indot.in.gov/Section106Documents/Default.aspx The Des. No. is the most efficient search term, once in IN-SCOPE. Please review the document before the meeting to facilitate discussion.

I have attached the agenda for the next consulting party meeting. **The meeting will be held on August 11, 2016 at 9:00 am in the City Center, Chamber Room**.

It will be an **all-day meeting**. If you are traveling from out of town, you may wish to consider arriving the day before.

We plan on pre-ordering lunches. If you have dietary restrictions, please let us know so that we are able to accommodate them.

We also request that you let us know that you are attending so that we may order the appropriate number of lunches.

Please dress comfortably. We plan on walking the project area as part of the meeting.

If you are unable to attend but would like to participate, please let us know. We will provide a call-in number.

Thank you for your participation in this project.

Linda

--
Linda Weintraut, Ph.D.
Weintraut & Associates, Inc.
PO Box 5034
4649 Northwestern Drive
Zionsville, Indiana 46077
317.733.9770 ext. 310

www.weintrautinc.com

Re: US 421 New Project (Des. No. 1400918) MEETING UPDATE

1 message

Linda Weintraut <linda@weintrautinc.com> Fri, Jul 29, 2016 at 4:36 PM
To: Jan Vetrhus <janvetrhus@gmail.com>
Cc: Bob Canida <bob@canidadentistry.com>, info@jchshc.org, doofendugel@yahoo.com, "Curran, Michele" <michele_curran@nps.gov>, camille Fife <camillefife@aol.com>, madisonmainstreetprogram@gmail.com, Julianne Steger <preservation@madison-in.gov>, Link Ludington <linkludington@gmail.com>, tkmadison@yahoo.com, peter@woodburnkyle.com, Greg Sekula <gsekula@indianalandmarks.org>, Walnut Street Initiative Madison <hmi@historicmadisoninc.com>, John Staicer <john@historicmadisoninc.com>, "V. Young" <artezian01@yahoo.com>, eoosahwee-voss@unitedkeetoowahband.org, sheila.chingwa@gtbindians.com, Kelsey Noack Myers <kelsey.myers@nei-yahw.com>, lpappenfort@peoriatribe.com, Peggy Vlerebome <pvlereb@cinergymetro.net>, Roxi Burns <burns.roxi@gmail.com>, Riverboat Inn & Suites <riverboatmadison@aim.com>, Diane Hunter <dhunter@miamination.com>, mhesse@achp.gov, TeriLu Adler <luterilu62@gmail.com>, "Carr, John" <jcarr@dnr.in.gov>, "Zoll, Mitchell K" <MZoll@dnr.in.gov>, "Slider, Chad" <CSlider@dnr.in.gov>, Betsy Merritt <emerritt@savingplaces.org>, 3316rowland <3316rowland@gmail.com>, MaryAnn Naber <mnaber@achp.gov>, Adam Burns <aburns@cmtengr.com>, "michelle.allen@dot.gov" <michelle.allen@dot.gov>, "Carpenter, Patrick A" <PACarpenter@indot.in.gov>, "Miller, Shaun (INDOT)" <smiller@indot.in.gov>, "Kennedy, Mary" <mkennedy@indot.in.gov>, Bethany Natali <bethany@weintrautinc.com>, "Whitney.Pflanzer@borshoff.biz" <Whitney.Pflanzer@borshoff.biz>, "Erin Pipkin, APR" <erin.pipkin@borshoff.biz>, carolyn.nelson@dot.gov, "Carlin, Whitney" <WCarlin@indot.in.gov>, david.clarke@dot.gov, "Stettler, Devin" <devins@ucindy.com>, Cassie Reiter <creiter@cmtengr.com>

Jan,

Thank you for your email. It is my understanding that the preferred alternative will not be selected until after the consulting party meeting.

The meeting on August 11th is important since we will discuss effects of the four alternatives on the districts, the timing of the various kinds of studies, and as part of the mitigation discussion in the afternoon, we can talk about stipulations in the Memorandum of Agreement for monitoring construction (no matter which alternative is chosen).

The CAC meeting will meet at another time and location since the Consulting Party meeting will focus on Section 106 and Section 110 issues.

Have a good weekend and I will see you on the 11th. Linda

On Mon, Jul 18, 2016 at 5:54 PM, Jan Vetrhus <janvetrhus@gmail.com> wrote:

> Linda, the agenda for the meeting on August 11th talks about walking through the area and discussing mitigation..... it doesn't include anything about the choice of alternatives or about making slight changes to any of the alternatives. Has someone already selected the preferred alternative?
>
> Where does the CAC come into the discussion again? They are not on the agenda for the 11th. I thought based on feedback from May that we were going to work together. The owner of the liquor store and the other business owners affected were not been included in the May discussion or invited to the August meeting.
>
> In addition to the height of the bridge and trucks, the lighting and the hight of the retaining walls, has INDOT provided the requested noise and vibration analysis - it's talked about in general terms in this report.
>
> Given INDOT's recent paving project, we can see how little thought is given to the historic district by the contractors actually doing the work. What will INDOT do to make sure that contractors are sensitive to vibration on the buildings in the historic district? It doesn't do much good to monitor vibration - the point is to reduce it during construction.
>
> Drainage is still a problem, as well. Closing up the culverts and building walls, where water flows naturally from the hillside to the river, cannot be good. We need to understand the drainage plan and its impact on the neighborhood. I didn't see any drainage plans in the alternatives.
>
> Jan Vetrhus
> 701 E. 2nd Street
>
> On Jul 15, 2016, at 8:37 AM, Linda Weintraut wrote:

Bethany Natali <bethany@weintrautinc.com> Fri, Jul 29, 2016 at 2:40 PM
To: Bethany Hughes <bhughes@weintrautinc.com>

---------- Forwarded message ----------
From: **Teresa Adler** <luterilu62@gmail.com>
Date: Fri, Jul 29, 2016 at 2:40 PM
Subject: Re: US 421 New Project (Des. No. 1400918) MEETING UPDATE
To: Linda Weintraut <linda@weintrautinc.com>
Cc: "Curran, Michele" <michele_curran@nps.gov>, Bob Canida <bob@canidadentistry.com>, "info@jchshc.org" <info@jchshc.org>, doofendugel@yahoo.com, camille Fife <camillefife@aol.com>, madisonmainstreetprogram@gmail.com, Julianne Steger <preservation@madison-in.gov>, Link Ludington <linkludington@gmail.com>, tkmadison@yahoo.com, peter@woodburnkyle.com, Greg Sekula <gsekula@indianalandmarks.org>, Walnut Street Initiative Madison <hmi@historicmadisoninc.com>, John Staicer <john@historicmadisoninc.com>, "V. Young" <artezian01@yahoo.com>, eoosahwee-voss@unitedkeetoowahband.org, sheila.chingwa@gtbindians.com, Kelsey Noack Myers <kelsey.myers@nei-yahw.com>, lpappenfort@peoriatribe.com, Jan Vetrhus <janvetrhus@gmail.com>, Peggy Vlerebome <pvlereb@cinergymetro.net>, Roxi Burns <burns.roxi@gmail.com>, Riverboat Inn & Suites <riverboatmadison@aim.com>, Diane Hunter <dhunter@miamination.com>, mhesse@achp.gov, "Carr, John" <jcarr@dnr.in.gov>, "Zoll, Mitchell K" <MZoll@dnr.in.gov>, "Slider, Chad" <CSlider@dnr.in.gov>, Betsy Merritt <emerritt@savingplaces.org>, 3316rowland <3316rowland@gmail.com>, MaryAnn Naber <mnaber@achp.gov>, Adam Burns <aburns@cmtengr.com>, "michelle.allen@dot.gov" <michelle.allen@dot.gov>, "Carpenter, Patrick A" <PACarpenter@indot.in.gov>, "Miller, Shaun (INDOT)" <smiller@indot.in.gov>, "Kennedy, Mary" <mkennedy@indot.in.gov>, Bethany Natali <bethany@weintrautinc.com>, "Whitney.Pflanzer@borshoff.biz" <Whitney.Pflanzer@borshoff.biz>, "Erin Pipkin, APR" <erin.pipkin@borshoff.biz>, carolyn.nelson@dot.gov, "Carlin, Whitney" <WCarlin@indot.in.gov>, david.clarke@dot.gov, "Stettler, Devin" <devins@ucindy.com>, Cassie Reiter <creiter@cmtengr.com>

It is also important to show the impact all the way up to Main Street. An overpass will effect not only the properties on Second St but all the adjacent ones between Second and Main.

Teri Lu Adler
714 E. Main St.
Madison, IN 47250
luterilu62@gmail.com

920-209-9159 cell
812-274-0557 home

[Quoted text hidden]

Re: US 421 New Project (Des. No. 1400918) MEETING UPDATE

1 message

Link Ludington <linkludington@gmail.com> Wed, Aug 10, 2016 at 8:27 AM
To: Linda Weintraut <linda@weintrautinc.com>
Cc: Bob Canida <bob@canidadentistry.com>, Info JCHS <info@jchshc.org>, doofendugel@yahoo.com, "Curran, Michele" <michele_curran@nps.gov>, camille Fife <camillefife@aol.com>, "Whitney (madisonmainstreetprogram@gmail.com)" <madisonmainstreetprogram@gmail.com>, Julianne Steger <preservation@madison-in.gov>, tkmadison@yahoo.com, peter@woodburnkyle.com, Greg Sekula <gsekula@indianalandmarks.org>, Walnut Street Initiative Madison <hmi@historicmadisoninc.com>, John Staicer <john@historicmadisoninc.com>, "V. Young" <artezian01@yahoo.com>, eoosahwee-voss@unitedkeetoowahband.org, sheila.chingwa@gtbindians.com, Kelsey Noack Myers <kelsey.myers@nei-yahw.com>, lpappenfort@peoriatribe.com, Jan Vetrhus <janvetrhus@gmail.com>, Peggy Vlerebome <pvlereb@cinergymetro.net>, Roxi Burns <burns.roxi@gmail.com>, Riverboat Inn & Suites <riverboatmadison@aim.com>, Diane Hunter <dhunter@miamination.com>, mhesse@achp.gov, TeriLu Adler <luterilu62@gmail.com>, "Carr, John" <jcarr@dnr.in.gov>, "Zoll, Mitchell K" <MZoll@dnr.in.gov>, "Slider, Chad" <CSlider@dnr.in.gov>, Betsy Merritt <emerritt@savingplaces.org>, 3316rowland <3316rowland@gmail.com>, MaryAnn Naber <mnaber@achp.gov>, Adam Burns <aburns@cmtengr.com>, "michelle.allen@dot.gov" <michelle.allen@dot.gov>, "Carpenter, Patrick A" <PACarpenter@indot.in.gov>, "Miller, Shaun (INDOT)" <smiller@indot.in.gov>, "Kennedy, Mary" <mkennedy@indot.in.gov>, Bethany Natali <bethany@weintrautinc.com>, "Whitney.Pflanzer@borshoff.biz" <Whitney.Pflanzer@borshoff.biz>, "Erin Pipkin, APR" <erin.pipkin@borshoff.biz>, carolyn.nelson@dot.gov, "Carlin, Whitney" <WCarlin@indot.in.gov>, david.clarke@dot.gov, "Stettler, Devin" <devins@ucindy.com>, Cassie Reiter <creiter@cmtengr.com>

For what it's worth, Alternative #6 has been identified as the "preferred" alternative in the draft Comprehensive Plan for the City of Madison, but with a different option in lieu of the cul-de-sac.

On Fri, Jul 15, 2016 at 8:37 AM, Linda Weintraut <linda@weintrautinc.com> wrote:

> Dear Consulting Party,
>
> First, a reminder that the memorandum titled **Effects of the US 421 New Road Project (Des. No.: 1400918; DHPA No.: 18317) on Historic Properties** may be found on the IN-SCOPE website located at the following link: http://netservices.indot.in.gov/Section106Documents/Default.aspx The Des. No. is the most efficient search term, once in IN-SCOPE. Please review the document before the meeting to facilitate discussion.
>
> I have attached the agenda for the next consulting party meeting. **The meeting will be held on August 11, 2016 at 9:00 am in the City Center, Chamber Room**.
>
> It will be an **all-day meeting**. If you are traveling from out of town, you may wish to consider arriving the day before.
>
> We plan on pre-ordering lunches. If you have dietary restrictions, please let us know so that we are able to accommodate them.
>
> **We also request that you let us know that you are attending** so that we may order the appropriate number of lunches.
>
> Please dress comfortably. We plan on walking the project area as part of the meeting.
>
> If you are unable to attend but would like to participate, please let us know. We will provide a call-in number.
>
> Thank you for your participation in this project.
>
> Linda
>
> --
> Linda Weintraut, Ph.D.
> Weintraut & Associates, Inc.
> PO Box 5034
> 4649 Northwestern Drive
> Zionsville, Indiana 46077
> 317.733.9770 ext. 310
>
> www.weintrautinc.com

image.png
228K

RE: US 421 New Project (Des. No. 1400918) MEETING UPDATE

1 message

John Staicer <john@historicmadisoninc.com> Thu, Aug 11, 2016 at 5:16 PM
To: Linda Weintraut <linda@weintrautinc.com>, Bob Canida <bob@canidadentistry.com>, info@jchshc.org, doofendugel@yahoo.com, "Curran, Michele" <michele_curran@nps.gov>, camille Fife <camillefife@aol.com>, madisonmainstreetprogram@gmail.com, Julianne Steger <preservation@madison-in.gov>, Link Ludington <linkludington@gmail.com>, tkmadison@yahoo.com, peter@woodburnkyle.com, Greg Sekula <gsekula@indianalandmarks.org>, Walnut Street Initiative Madison <hmi@historicmadisoninc.com>, "V. Young" <artezian01@yahoo.com>, eoosahwee-voss@unitedkeetoowahband.org, sheila.chingwa@gtbindians.com, Kelsey Noack Myers <kelsey.myers@nei-yahw.com>, lpappenfort@peoriatribe.com, Jan Vetrhus <janvetrhus@gmail.com>, Peggy Vlerebome <pvlereb@cinergymetro.net>, Roxi Burns <burns.roxi@gmail.com>, riverboatmadison@aim.com, Diane Hunter <dhunter@miamination.com>, mhesse@achp.gov, TeriLu Adler <luterilu62@gmail.com>, "Carr, John" <jcarr@dnr.in.gov>, "Zoll, Mitchell K" <MZoll@dnr.in.gov>, "Slider, Chad" <CSlider@dnr.in.gov>, Betsy Merritt <emerritt@savingplaces.org>, 3316rowland <3316rowland@gmail.com>, mnaber@achp.gov
Cc: Adam Burns <aburns@cmtengr.com>, michelle.allen@dot.gov, "Carpenter, Patrick A" <PACarpenter@indot.in.gov>, "Miller, Shaun (INDOT)" <smiller@indot.in.gov>, "Kennedy, Mary" <mkennedy@indot.in.gov>, Bethany Natali <bethany@weintrautinc.com>, Whitney.Pflanzer@borshoff.biz, "Erin Pipkin, APR" <erin.pipkin@borshoff.biz>, carolyn.nelson@dot.gov, "Carlin, Whitney" <WCarlin@indot.in.gov>, david.clarke@dot.gov, "Stettler, Devin" <devins@ucindy.com>, Cassie Reiter <creiter@cmtengr.com>

Linda,

Thanks for a very good meeting. I thought the presentations went well and the input from the consulting parties I thought to be well informed. I'm pleased we got everything on the agenda covered in the time allotted.

John

From: Linda Weintraut [mailto:linda@weintrautinc.com]
Sent: Thursday, August 11, 2016 4:33 PM
To: Bob Canida; info@jchshc.org; doofendugel@yahoo.com; Curran, Michele; camille Fife; madisonmainstreetprogram@gmail.com; Julianne Steger; Link Ludington; tkmadison@yahoo.com; peter@woodburnkyle.com; Greg Sekula; Walnut Street Initiative Madison; John Staicer; V. Young; eoosahwee-voss@unitedkeetoowahband.org; sheila.chingwa@gtbindians.com; Kelsey Noack Myers; lpappenfort@peoriatribe.com; Jan Vetrhus; Peggy Vlerebome; Roxi Burns; riverboatmadison@aim.com; Diane Hunter; mhesse@achp.gov; TeriLu Adler; Carr, John; Zoll, Mitchell K; Slider, Chad; Betsy Merritt; 3316rowland; mnaber@achp.gov
Cc: Adam Burns; michelle.allen@dot.gov; Carpenter, Patrick A; Miller, Shaun (INDOT); Kennedy, Mary; Bethany Natali; Whitney.Pflanzer@borshoff.biz; Erin Pipkin, APR; carolyn.nelson@dot.gov; Carlin, Whitney; david.clarke@dot.gov; Stettler, Devin; Cassie Reiter
Subject: Re: US 421 New Project (Des. No. 1400918) MEETING UPDATE

Thanks to everyone who attended and participated in today's meeting!

After the meeting, we did find a pair of glasses on the table. Please check at City Hall if the glasses belong to you.

Linda Weintraut

On Jul 15, 2016, at 8:37 AM, Linda Weintraut <linda@weintrautinc.com> wrote:

> Dear Consulting Party,
>
> First, a reminder that the memorandum titled **Effects of the US 421 New Road Project (Des. No.: 1400918; DHPA No.: 18317) on Historic Properties** may be found on the IN-SCOPE website located at the following link: http://netservices.indot.in.gov/Section106Documents/Default.aspx The Des. No. is the most efficient search term, once in IN-SCOPE. Please review the document before the meeting to facilitate discussion.
>
> I have attached the agenda for the next consulting party meeting. **The meeting will be held on August 11, 2016 at 9:00 am in the City Center, Chamber Room**.
>
> It will be an **all-day meeting**. If you are traveling from out of town, you may wish to consider arriving the day before.
>
> We plan on pre-ordering lunches. If you have dietary restrictions, please let us know so that we are able to accommodate them.
>
> **We also request that you let us know that you are attending** so that we may order the appropriate number of lunches.
>
> Please dress comfortably. We plan on walking the project area as part of the meeting.
>
> If you are unable to attend but would like to participate, please let us know. We will provide a call-in number.
>
> Thank you for your participation in this project.
>
> Linda
>
> --

Public Open House #3 Comment Summary

General Comments:

- Renderings should have been of real homes not blocks on concrete.
- Include pedestrian connection to River Bridge.
- Consider a cul-de-sac instead of the t-turn around.
- Consider landscape buffer near turn around between neighborhood.
- Do not take little red house at 114 Sering. Bridge over culvert.

Alternative 4 – Grade Separated:

- Traffic
  - Bridge option gets traffic to/from Kentucky quicker and keeps general traffic off neighborhood streets that weren't designed to accommodate truck traffic and noise. The slightly greater cost of this options would be justified.
  - Grade starting at 1st street will cause more traffic to cut through on 1st to avoid taking the new route.
  - Would like traffic light to help with pedestrian traffic.
  - Stop signs result in excessive noise, extra pollution, added time, and accidents as annoyed motorists race away from stop signs.
  - The overpass at 2nd St. eliminates an intersection that could be a location for accidents.
  - Worried about truck noise on E Main St where there hasn't been much truck traffic. Use of jake brakes?

- Structure
  - Bridge is better option because without the bridge, it will be too easy for traffic to follow the current route through Madison and not continue up to Main Street as desired and intended by the project team.
  - This alternative provides a more gradual grade. *(incorrect assumption based on design facts)*

- Aesthetics
  - Too much concrete.
  - Appears to be the "softest" approach.
  - Graffiti is a concern on bridge.
  - This option can serve Madison for many years to come.
  - Bridge options provides the 'gateway' goal of the project. Make retaining walls aesthetically pleasing and within neighborhood character.
  - Add trees and green space.
  - Doesn't fit in with historic Madison.

Preference Identified on Handouts: 11 (preferred) 5(not preferred)

Alternative 6:

- Simplest option, and therefore the best.

- Traffic
  - This alternative gives the option for traffic to still use the existing route which does not meet the goal of the project. Should use techniques to discourage traffic from using 2nd street.
  - Prefer the flow with no stop at 2nd Street.
  - Dead end eliminates dangerous intersection by eliminating accelerating traffic from Main St.
  - The stop sign will cause excessive noise/ pollution/ more time in transit/ accidents.

- Aesthetics
  - Include a parking area with a tourism kiosk and greenery.
  - Obtain more land on either side for greenspace.
  - Remove unsightly development along corridor.

Preference Identified on Handouts: 11 (preferred) 1 (not preferred)

Michael R. Pence, Governor
Cameron F. Clark, Director

DNR Indiana Department of Natural Resources

Division of Historic Preservation & Archaeology·402 W. Washington Street, W274·Indianapolis, IN 46204-2739
Phone 317-232-1646·Fax 317-232-0693·dhpa@dnr.IN.gov·www.IN.gov/dnr/historic

August 19, 2016

Anuradha Kumar
Manager, Cultural Resources Office
Environmental Services
Indiana Department of Transportation
100 North Senate Avenue, Room N642
Indianapolis, Indiana 46204

Federal Agency: Indiana Department of Transportation ("INDOT")
on behalf of Federal Highway Administration ("FHWA")

Re: Invitation to the August 11, 2016, consulting parties meeting, and memorandum on "Effects of the US 421 New Road Project (Des. No.: 1400918; DHPA No.: 18317) on Historic Properties" (Weintraut & Associates, 6/20/2016), in the City of Madison, Jefferson County, Indiana

Dear Ms. Kumar:

Pursuant to Sections 106 and 110(f) of the National Historic Preservation Act of 1966, as amended (54 U.S.C. §§ 306108 and 306107, respectively), 36 C.F.R. Part 800, and the "Programmatic Agreement Among the Federal Highway Administration, the Indiana Department of Transportation, the Advisory Council on Historic Preservation and the Indiana State Historic Preservation Officer Regarding the Implementation of the Federal Aid Highway Program In the State of Indiana," the staff of the Indiana State Historic Preservation Officer has reviewed the memorandum submitted with your letter dated June 28, 2016, which we received on July 1.

At the August 11, 2016, consulting parties meeting, the consultants indicated that that all alternatives other than 1, 4, 6, and 8 had been eliminated from further consideration, after applying relevant metrics and that the application of a second set of metrics had all but eliminated Alternative 8 (which would involve construction of a roundabout at SR 56 and Ferry Street). Alternative 1 (No-Build) must be carried forward in the analysis, but its being selected as the preferred alternative is thought to be only a remote possibility. Consequently, we will not comment here on either Alternative 1 or Alternative 8.

The consultants and highway agencies shared during the meeting that, at this point in the process, they are leaning toward Alternative 6 (involving a Four-Leg Two-Way Stop-Control Intersection at Second and Harrison--but with traffic signals that would allow traffic to flow freely on Harrison Street/US 421). Near the end of the discussion, a show of hands indicated that the vast majority of consulting parties present favor an at-grade intersection at Second Street and Harrison Street/US 421 similar to Alternative 6, although most seemed to favor a traffic signal system that would allow a pedestrian or a motorist wishing to cross Harrison on Second to activate a stop signal for traffic on Harrison. Presumably, that ability to stop traffic on Harrison would also apply to motorists wishing to turn north or south from Second onto Harrison. The consultants stated that Alternative 4 (Signalized T-Intersection with SR 56 at US 421–including a Harrison Street/US 421 overpass of Second) could not yet be eliminated from consideration, because the analysis of the project under Section 4(f) of the Department of Transportation Act of 1966 had not yet been conducted.

We agree with the effects memorandum that both Alternative 4 and Alternative 6 would have adverse effects on both the NHL and NRHP districts, for the reasons given in the effects memorandum.

Based on what we know at this time, it appears to us, qualitatively speaking, that Alternative 6 is less likely to have as severe an overall impact on the Madison National Historic Landmark (NHL) District or the Madison National Register of Historic

Places (NRHP) District as Alternative 4 is likely to have, even if Alternative 4 would require slightly fewer acquisitions of properties that contribute to one of both of the districts.

The effects memorandum speaks in general terms about whether vehicular noise would increase or decrease, but during the August 11 meeting, some specific numbers of properties that are or would be at or above the 67dB level that FHWA recognizes as mitigable with noise walls under the status quo and under alternatives 4 and 6 were stated orally. Similar projections were made for the numbers of properties that would be in the borderline range. It would be helpful for the consulting parties to have those figures in writing.

It was suggested by one or more consulting parties that if Alternative 6 does not include a traffic signal system at Second and Harrison/US 421 that could be activated in favor of pedestrian and vehicular traffic on Second, that circumstance, in itself, would have an adverse effect. We think this probably is a reasonable conclusion. As one consulting party characterized it, a grade-level Harrison-Second intersection, without adequate protection for those wanting to cross Harrison, would be a kind of "barrier" between the east end (the former Fulton community) and the rest of the city, even if it were not as much of a physical or visual a barrier as the Alternative 4 grade separation would be. It seems to us that if pedestrians and motorists on Second would be unwilling to cross Harrison/US 421 because of inadequate time to cross safely, then the utility of the contributing houses and commercial buildings east of Harrison is likely to be diminished, thereby discouraging their continued use, which we think should be considered an adverse effect.

We also would suggest that Alternative 6 could have yet another adverse effect that has not been identified by the consultants, unless on-street parking continues to be allowed on Second Street between Harrison Street/US 421 and Sering Street. One consulting party asked that on-street parking in that block be provided as a mitigation measure—presumably for other adverse effects—but we would suggest that eliminating on-street parking in that block could actually have an adverse effect. That consulting party, who is a resident of the block, stated that she must park her vehicle on Second, because she has no driveway, and she also said that a neighbor has two more vehicles than he can fit into his driveway and must park them on Second. We recognize that the marked aerial photograph/map for Alternative 6 in the effects memorandum is schematic, but it shows only two, through lanes for that block of Second Street (which would also become SR 56). A change in the use or configuration of Second Street that results in a lack or shortage of parking for residents of that block likely would diminish the utility of contributing houses on that street and discourage their continued use.

In regard to archaeological resources, it is our understanding, from information presented at the August 11, 2016, consulting parties meeting, that archaeological investigations are taking place, that an archaeological report is being prepared for the proposed project area by a qualified professional archaeologist, and that copies of that document will be submitted to the DHPA for review and comments. Once a copy of this document has been received, the Indiana SHPO will resume identification and evaluation procedures for this project. Please keep in mind that additional information may be requested in the future.

One mitigation measure suggested at the August 11 meeting was that if the house at 112 Sering Street is acquired for the US 421 New Road Project, then the original, rectangular plan part of the main story (Sering Street level) could perhaps be moved to a vacant lot within one or the other of the districts. It was further suggested that if the house were moved to a location along Harrison Street, it could be reused as a welcome center. However the house would be reused, it would help to maintain the density of contributing properties within one or both districts. The property owner indicated that the basement walls of the house, which are exposed on the downhill side, appear to be constructed of an early form of concrete. We wonder, however, whether the structural walls of the basement might, instead, be parged stone. If so, then separating the Sering Street level, main story from the basement might not be infeasible. We recommend that the feasibility of moving the main story be examined by an architect or structural engineer, if the house will be acquired for the project.

We think that all of the mitigation measures that were thoughtfully suggested at the August 11 meeting are worth considering, although we realize that probably not all of them will be selected. We recommend, however, that the project budget—which apparently has not been put into final form yet—provide generously for appropriate mitigation for the project. Regardless of how sensitively and tastefully they will be designed, Alternative 4 would result in a vertical barrier and Alternative 6 would result in a rather large gash through the historic districts. The engineering and construction costs, in any case, will be many times greater than any amount that will be provided

for mitigation for this project in Madison, one of Indiana's most historically and architecturally significant communities.

If you have questions about buildings or structures, please contact John Carr at (317) 233-1949 or jcarr@dnr.IN.gov. Questions about archaeological issues should be directed to Mitch Zoll at (317) 232-3492 or mzoll@dnr.IN.gov, or to Wade T. Tharp at (317) 232-1650 or wtharp1@dnr.IN.gov.

In future correspondence about the US 421 New Road Construction in Madison, please continue to refer to DHPA No. 18317.

Very truly yours,

Chad W. Slider

Mitchell K. Zoll
Deputy State Historic Preservation Officer

MKZ:JLC:WTT:wtt

cc: Linda Weintraut, Ph.D., Weintraut and Associates, Inc.
emc: Michelle Allen, Federal Highway Administration, Indiana Division
Owen Lindauer, Acting Federal Preservation Officer, Federal Highway Administration, Office of Project Development and Environmental Review
Carolyn Nelson, Federal Highway Administration, Office of Project Development and Environmental Review
MaryAnn Naber, Advisory Council on Historic Preservation
Michele Curran, Ph.D., National Park Service, Midwest Regional Office
Anuradha Kumar, Indiana Department of Transportation
Shaun Miller, Indiana Department of Transportation
Mary Kennedy, Indiana Department of Transportation
Patrick Carpenter, Indiana Department of Transportation
Shirley Clark, Indiana Department of Transportation
Adam Burns, Crawford, Murphy and Tilly Engineers and Consultants
Linda Weintraut, Ph.D., Weintraut & Associates, Inc.
Jason Goldbach, Weintraut & Associates, Inc.
Mitchell Zoll, Deputy State Historic Preservation Officer, Indiana Department of Natural Resources
Chad Slider, Indiana Department of Natural Resources
Wade T. Tharp, Indiana Department of Natural Resources
John Carr, Indiana Department of Natural Resources

CP Meeting Summary

1 message

Linda Weintraut <linda@weintrautinc.com> Tue, Aug 23, 2016 at 2:49 PM

To: Bob Canida <bob@canidadentistry.com>, Info JCHS <info@jchshc.org>, Patrick Cunningham <doofendugel@yahoo.com>, "Curran, Michele" <michele_curran@nps.gov>, camille Fife <camillefife@aol.com>, "Whitney (madisonmainstreetprogram@gmail.com)" <madisonmainstreetprogram@gmail.com>, Julianne Steger <preservation@madison-in.gov>, Link Ludington <linkludington@gmail.com>, tkmadison@yahoo.com, peter@woodburnkyle.com, Greg Sekula <gsekula@indianalandmarks.org>, Walnut Street Initiative Madison <hmi@historicmadisoninc.com>, John Staicer <john@historicmadisoninc.com>, "V. Young" <artezian01@yahoo.com>, eoosahwee-voss@unitedkeetoowahband.org, sheila.chingwa@gtbindians.com, lpappenfort@peoriatribe.com, Jan Vetrhus <janvetrhus@gmail.com>, Peggy Vlerebome <pvlereb@cinergymetro.net>, Riverboat Inn & Suites <riverboatmadison@aim.com>, Diane Hunter <dhunter@miamination.com>, TeriLu Adler <luterilu62@gmail.com>, "Carr, John" <jcarr@dnr.in.gov>, "Zoll, Mitchell K" <MZoll@dnr.in.gov>, "Slider, Chad" <CSlider@dnr.in.gov>, "Tharp, Wade" <WTharp1@dnr.in.gov>, Betsy Merritt <emerritt@savingplaces.org>, 3316rowland <3316rowland@gmail.com>, MaryAnn Naber <mnaber@achp.gov>, melody.henry@nei-yahw.com, Lisa LaRue-Baker - UKB THPO <ukbthpo-larue@yahoo.com>, tavernmaster926@frontier.com, rleach1962@gmail.com, rgrote@seidata.com, jkoehlermd@cinergymetro.net, mhillery2011@gmail.com, cemejean@gmail.com, ncheatham@cinergymetro.net, Stephen@thomasfamilywinery.us, kgail73@hotmail.com

Cc: Adam Burns <aburns@cmtengr.com>, "michelle.allen@dot.gov" <michelle.allen@dot.gov>, "Carpenter, Patrick A" <PACarpenter@indot.in.gov>, "Miller, Shaun (INDOT)" <smiller@indot.in.gov>, "Kennedy, Mary" <mkennedy@indot.in.gov>, Linda Weintraut <linda@weintrautinc.com>, Bethany Natali <bethany@weintrautinc.com>, "Whitney.Pflanzer@borshoff.biz" <Whitney.Pflanzer@borshoff.biz>, "Erin Pipkin, APR" <erin.pipkin@borshoff.biz>, "Carlin, Whitney" <WCarlin@indot.in.gov>, david.clarke@dot.gov, "Stettler, Devin" <devins@ucindy.com>, Cassie Reiter <creiter@cmtengr.com>, "Kumar, Anuradha" <akumar@indot.in.gov>, Jason Goldbach <jason@weintrautinc.com>

Please see attached consulting party meeting summary. The summary has a list of all attendees and the tear sheets from each discussion group as an attachment. Please let me know if you have questions.

Thank you for your participation.

--
Linda Weintraut, Ph.D.
Weintraut & Associates, Inc.
PO Box 5034
4649 Northwestern Drive
Zionsville, Indiana 46077
317.733.9770 ext. 310

www.weintrautinc.com

US421Madison_Des1400918_CPmtgSummary_2016.0823Rvsd.pdf
4202K

From: **Linda Weintraut** <linda@weintrautinc.com>
Date: Fri, Sep 2, 2016 at 4:40 PM
Subject: Re: CP Meeting Summary
To: Bob Canida <bob@canidadentistry.com>, Info JCHS <info@jchshc.org>, Patrick Cunningham <doofendugel@yahoo.com>, "Curran, Michele" <michele_curran@nps.gov>, camille Fife <camillefife@aol.com>, "Whitney (madisonmainstreetprogram@gmail.com)" <madisonmainstreetprogram@gmail.com>, Julianne Steger <preservation@madison-in.gov>, Link Ludington <linkludington@gmail.com>, tkmadison@yahoo.com, peter@woodburnkyle.com, Greg Sekula <gsekula@indianalandmarks.org>, Walnut Street Initiative Madison <hmi@historicmadisoninc.com>, John Staicer <john@historicmadisoninc.com>, "V. Young" <artezian01@yahoo.com>, eoosahwee-voss@unitedkeetoowahband.org, sheila.chingwa@gtbindians.com, lpappenfort@peoriatribe.com, Jan Vetrhus <janvetrhus@gmail.com>, Peggy Vlerebome <pvlereb@cinergymetro.net>, Riverboat Inn & Suites <riverboatmadison@aim.com>, Diane Hunter <dhunter@miamination.com>, TeriLu Adler <luterilu62@gmail.com>, "Carr, John" <jcarr@dnr.in.gov>, "Zoll, Mitchell K" <MZoll@dnr.in.gov>, "Slider, Chad" <CSlider@dnr.in.gov>, "Tharp, Wade" <WTharp1@dnr.in.gov>, Betsy Merritt <emerritt@savingplaces.org>, 3316rowland <3316rowland@gmail.com>, MaryAnn Naber <mnaber@achp.gov>, melody.henry@nei-yahw.com, Lisa LaRue-Baker - UKB THPO <ukbthpo-larue@yahoo.com>, tavernmaster926@frontier.com, Robert Leach <rleach1962@gmail.com>, Rick Grote <rgrote@seidata.com>, jkoehlermd@cinergymetro.net, Maggie Hillery <mhillery2011@gmail.com>, Chris Mejean <cemejean@gmail.com>, ncheatham@cinergymetro.net, Stephen@thomasfamilywinery.us, Kathy Griffin <kgail73@hotmail.com>
Cc: Adam Burns <aburns@cmtengr.com>, "michelle.allen@dot.gov" <michelle.allen@dot.gov>, "Carpenter, Patrick A" <PACarpenter@indot.in.gov>, "Miller, Shaun (INDOT)" <smiller@indot.in.gov>, "Kennedy, Mary" <mkennedy@indot.in.gov>, Linda Weintraut <linda@weintrautinc.com>, Bethany Natali <bethany@weintrautinc.com>, "Whitney.Pflanzer@borshoff.biz" <Whitney.Pflanzer@borshoff.biz>, "Erin Pipkin, APR" <erin.pipkin@borshoff.biz>, "Carlin, Whitney" <WCarlin@indot.in.gov>, david.clarke@dot.gov, "Stettler, Devin" <devins@ucindy.com>, Cassie Reiter <creiter@cmtengr.com>, "Kumar, Anuradha" <akumar@indot.in.gov>, Jason Goldbach <jason@weintrautinc.com>

Dear Consulting Party,

We are presently assembling comments for the 800.11(e) documentation for this project. As you likely remember, the comment period for the Effects Memorandum ended on August 22, 2016

We received verbal comments at the consulting party meeting on the effects and the alternatives, but if any consulting party wishes to provide formal **written comments** prior to the issuance of the 800.11(e), please send those comments to me no later than **September 9, 2016.**

Have a great holiday weekend! Thank you for your participation in this project.

Linda
--
Linda Weintraut, Ph.D.
Weintraut & Associates, Inc.
PO Box 5034
4649 Northwestern Drive
Zionsville, Indiana 46077
317.733.9770 ext. 310

On Tue, Aug 23, 2016 at 2:49 PM, Linda Weintraut <linda@weintrautinc.com> wrote:

> Please see attached consulting party meeting summary. The summary has a list of all attendees and the tear sheets from each discussion group as an attachment. Please let me know if you have questions.
>
> Thank you for your participation.
>
> --
> Linda Weintraut, Ph.D.
> Weintraut & Associates, Inc.
> PO Box 5034
> 4649 Northwestern Drive
> Zionsville, Indiana 46077
> 317.733.9770 ext. 310
>
> www.weintrautinc.com

--
Linda Weintraut, Ph.D.
Weintraut & Associates, Inc.
PO Box 5034
4649 Northwestern Drive
Zionsville, Indiana 46077
317.733.9770 ext. 310

www.weintrautinc.com

--
Linda Weintraut, Ph.D.
Weintraut & Associates, Inc.
PO Box 5034
4649 Northwestern Drive
Zionsville, Indiana 46077
317.733.9770 ext. 310

www.weintrautinc.com

---------- Forwarded message ----------
From: **Curran, Michele** <michele_curran@nps.gov>
Date: Thu, Sep 8, 2016 at 3:11 PM
Subject: Oop and sorry!
To: Linda Weintraut <linda@weintrautinc.com>, Link Ludington <LinkLudington@gmail.com>, John Staicer <john@historicmadisoninc.com>, "Jan Vetrhus (janvetrhus@gmail.com)" <janvetrhus@gmail.com>, Camille Fife CONTRACTOR <wgimadison@aol.com>

> Hello Linda,
>
> Please use this version as our formal response to the consultation on the Madison Bridge Approach. Jan Vetrhus pointed out that I had confused the two alternatives. I apologize for the mistake.
>
> I thought the NPS opinion on the project has been clearly expressed at both meetings. Nonetheless, the proposed overpass bridge in Alternative 4 is totally unacceptable. While Alternative 6 is still an adverse affect on the NHL, it is more acceptable than other options. We do insist on stoplights at the intersection for the safety of the local residents and to maintain the walkability of the NHL Historic District. I agree with local residents that a tastefull welcome to Madison and the NHL needs to be incorporated into the retaining wall along the Hillside below the hotel. We would like to see the wall terraced in several increments to soften the harsh visual of a tall wall. Materials used to construct the retaining wall need to be sympathetic to historical stone materials used throughout the historic district.

Michele J. Curran, Ph.D. / Historian
National Historic Landmarks Program
National Park Service / Midwest Regional Office
601 Riverfront Drive / Omaha, Nebraska 68102

Phone: 402.661.1954 / Fax: 402.661.1955
Email: michele_curran@nps.gov

--
Linda Weintraut, Ph.D.
Weintraut & Associates, Inc.
PO Box 5034
4649 Northwestern Drive
Zionsville, Indiana 46077
317.733.9770 ext. 310

www.weintrautinc.com

---------- Forwarded message ----------
From: **Jan Vetrhus** <janvetrhus@gmail.com>
Date: Thu, Sep 8, 2016 at 5:19 PM
Subject: For the record...
To: Linda Weintraut <linda@weintrautinc.com>
Cc: Adam Burns <aburns@cmtengr.com>, Michele Curran <Michele_Curran@nps.gov>

Linda, here are my thoughts, in writing, for the Project 421 proposal.

Jan Vetrhus
701 E. 2nd Street
Madison, IN 47250
Vice President, Cornerstone Society
President, Historic Eleutherian College
812-599-3447

--
Linda Weintraut, Ph.D.
Weintraut & Associates, Inc.
PO Box 5034
4649 Northwestern Drive
Zionsville, Indiana 46077
317.733.9770 ext. 310

www.weintrautinc.com

Project_421_comments.doc
19K

US 421 New Project (Des. No. 1400918)

Alternative 6 is my preferred choice because it represents the least noise and vibration to the neighborhood. Alternative 4, while reducing traffic on 2nd Street, would impose a huge new structure that would cut the neighborhood in half, visually, and add significant walls.

With the appropriate design and mitigation Alternative 6 could enhance the entrance to Madison and the National Historic Landmark District.

It is critical that the 10 foot high retaining wall be designed into the Hillside Inn property in such a way to restore the historic landscape that included terraced rock walls. Plantings and natural rock must be used to reduce the noise and provide visual continuity with the historic district. I believe the JCHS made historic photos available. Materials from the remnants of the old stone walls should be re-used as much as possible.

It is also very important that a traffic signal is installed at 2nd & Harrison so that pedestrians and cyclists, as well as cross traffic can cross safely. The choice of the traffic signal should not have overhead wires, but be designed into the neighborhood. That intersection should also be designed to discourage through traffic from turning into the neighborhood.

Traffic calming must be built into the design so that through traffic, especially trucks, do not roar onto Main Street at maximum speed. Since Alternative 6 reduces the need to stop, it is essential that traffic is slowed naturally as it enters Main Street. Pedestrian crossings on Main Street need to be safe.

Jan Vetrhus
701 E. 2nd Street
Madison, IN 47250
812-599-3447

From: Curran, Michele [mailto:michele_curran@nps.gov]
Sent: Thursday, September 15, 2016 4:31 PM
To: Carpenter, Patrick A <PACarpenter@indot.IN.gov>
Subject: HABS.HAER.HALS

**** This is an EXTERNAL email. Exercise caution. DO NOT open attachments or click links from unknown senders or unexpected email. ****

Short form historical reports

The guidelines for short form and outline reports are found in the respective guidelines for HABS, HAER, and HALS. Since HABS, HAER, and HALS sites can be quite different, there are slight variations in the headings. However, the gist of each is the same.

- HABS Guidelines: See HABS History Guidelines, pp. 2 and 3-4
- HAER Guidelines: See HAER History Guidelines, pp. 1 and 3-4
- HALS Guidelines: See HALS History Guidelines, p. 22, and HALS Short Format History Template (which includes additional instructions)

Michele J. Curran, Ph.D. / Historian

National Historic Landmarks Program

National Park Service / Midwest Regional Office

601 Riverfront Drive / Omaha, Nebraska 68102

Phone: *402.661.1954* ***/ Fax:*** *402.661.1955*

Email: *michele_curran@nps.gov*

--
Linda Weintraut, Ph.D.
Weintraut & Associates, Inc.
PO Box 5034
4649 Northwestern Drive
Zionsville, Indiana 46077
317.733.9770 ext. 310

www.weintrautinc.com

---------- Forwarded message ----------
From: **Curran, Michele** <michele_curran@nps.gov>
Date: Thu, Sep 8, 2016 at 3:11 PM
Subject: Oop and sorry!
To: Linda Weintraut <linda@weintrautinc.com>, Link Ludington <LinkLudington@gmail.com>, John Staicer <john@historicmadisoninc.com>, "Jan Vetrhus (janvetrhus@gmail.com)" <janvetrhus@gmail.com>, Camille Fife CONTRACTOR <wgimadison@aol.com>

Hello Linda,

Please use this version as our formal response to the consultation on the Madison Bridge Approach. Jan Vetrhus pointed out that I had confused the two alternatives. I apologize for the mistake.

I thought the NPS opinion on the project has been clearly expressed at both meetings. Nonetheless, the proposed overpass bridge in Alternative 4 is totally unacceptable. While Alternative 6 is still an adverse affect on the NHL, it is more acceptable than other options. We do insist on stoplights at the intersection for the safety of the local residents and to maintain the walkability of the NHL Historic District. I agree with local residents that a tastefull welcome to Madison and the NHL needs to be incorporated into the retaining wall along the Hillside below the hotel. We would like to see the wall terraced in several increments to soften the harsh visual of a tall wall. Materials used to construct the retaining wall need to be sympathetic to historical stone materials used throughout the historic district.

Michele J. Curran, Ph.D. / Historian
National Historic Landmarks Program
National Park Service / Midwest Regional Office
601 Riverfront Drive / Omaha, Nebraska 68102

Phone: ***402.661.1954*** **/ Fax:** ***402.661.1955***
Email: ***michele_curran@nps.gov***

--
Linda Weintraut, Ph.D.
Weintraut & Associates, Inc.
PO Box 5034
4649 Northwestern Drive
Zionsville, Indiana 46077
317.733.9770 ext. 310

www.weintrautinc.com

REVIEW REQUEST SUBMITTAL

State Form 55031 (7-12)
Indiana Department of Natural Resources
Division of Historic Preservation and Archaeology, Indiana State Historic Preservation Office (SHPO)

HISTORIC PRESERVATION AND ARCHAEOLOGY

Please complete this form and attach it to front of all submittals, along with any reports or supplemental materials you are providing to the Indiana DHPA for review.

Date: October 18, 2016

Is this a new submission? ☑ Yes ☐ No

Reference for previous submittals: DHPA # 18317 Des. No. 14900918

THIS REVIEW REQUEST SUBMITTED BY:

Name: Linda Weintraut, Ph.D.

Company/Organization: Weintraut & Associates

Address: PO Box 5034, Zionsville, Indiana 46077

Telephone number: 317-733-9770 Email address: linda@weintrautinc.com

PROJECT NAME & LOCATION ***[Please attach a map with location(s) marked]***

Project Name/Reference: US 421 New Road Construction Project/ Des # 14900918

Project Address/Location: Milton Bridge to SR 56

City: City of Madison Township(s): Madison

County/Counties: Jefferson

STATE OR FEDERAL AGENCY INVOLVEMENT

Agency: FHWA Program:

Type of funds, license, or permit to be obtained *(if applicable)*: FHWA funds

Name(s) of Agency Contact: Michelle Allen

Address: 575 North Pennsylvania Street Room 254, Indianapolis, Indiana 46204

Telephone number: 317-266-7344 Email address: Michelle.Allen@dot.gov

APPLICANT *(if different than Federal Agency)* ***If available, please attach copy of authorization letter from federal agency***

Applicant: Indiana Department of Transportation

Name of Contact: Anuradha Kumar

Address: 100 North Senate Ave., IGCN 642, Indianapolis, IN 46204

Telephone number: 317-234-5168 Email address: akumar@indot.in.gov

CONSULTANT FOR THE APPLICANT OR AGENCY *(IF APPLICABLE)*

Consultant: CMT

Name of Contact: Adam Burns

Address: 8790 Purdue Road, Indianapolis, Indiana 46268

Telephone number: 317.6492.9159 Email address: aburns@cmtengr.com

Contact for DHPA questions regarding this review request: Linda Weintraut

Comments:

Please note that incomplete submissions may result in delays. To ensure an expeditious review, please be sure that the following has been provided:

- ☑ Full contact information for person/entity submitting form, including phone number and email *(if available)*
- ☑ Map of project location with project area(s) clearly marked *(provided in current or previous submission)*
- ☑ Clear photographs of project area and surroundings
- ☑ Project description
- ☑ Description of any proposed ground disturbance
- ☑ Name of Federal agency/agencies and program providing funds, license, or permit
- ☐ Letter of authorization from Federal agency/agencies *(if applicable)*

Return this Form and Attachments to:

Indiana Department of Natural Resources
Division of Historic Preservation and Archaeology
402 W. Washington Street, Room W274
Indianapolis, Indiana 46204

http://www.in.gov/dnr/historic

Michael R. Pence, Governor
Cameron F. Clark, Director

DNR Indiana Department of Natural Resources

Division of Historic Preservation & Archaeology·402 W. Washington Street, W274·Indianapolis, IN 46204-2739
Phone 317-232-1646·Fax 317-232-0693·dhpa@dnr.IN.gov·www.IN.gov/dnr/historic

November 18, 2016

Linda Weintraut Ph.D.
Weintraut & Associates, Inc.
P.O. Box 5034
Zionsville, Indiana 46077

Federal Agency: Indiana Department of Transportation ("INDOT")
on behalf of Federal Highway Administration ("FHWA")

Re: "Phase Ia Archaeological Records Check and Field Reconnaissance: Proposed US 421 New Road Construction from the Approach of the Madison Milton Bridge to SR 56 in the City of Madison, Jefferson County, Indiana" (Goldbach 2016), (Des. No. 1400918), (DHPA No. 18317)

Dr. Weintraut:

Pursuant to Section 106 of the National Historic Preservation Act of 1966, as amended (54 U.S.C. § 306108), 36 C.F.R. Part 800, and the "Programmatic Agreement (PA) . . . Regarding the Implementation of the Federal Aid Highway Program In the State of Indiana," the staff of the Indiana State Historic Preservation Officer has reviewed the report submitted with your Review Request dated October 18, 2016 and received on October 19, 2016 for the aforementioned project in the Jefferson County, Indiana.

In regard to the phase Ia reconnaissance report, based on the submitted information and the documentation available to the staff of the Indiana SHPO, we concur with the recommendation of the archaeologist and agree that further archaeological investigation is not necessary at archaeological sites 12-Je-550, 12-Je-0554, 12-Je-0556, 12-Je-0557, 12-Je-0558, 12-Je-0559, and 12-Je-0560. We also agree that archaeological sites 12-Je-0549, 12-Je-0552, 12-Je-0553, 12-Je-0555, and 12-Je-0561 will require additional archival research and photo documentation; and that archaeological sites 12-Je-0551 and 12-Je-0553 will require a Phase Ib investigation unless they can be avoided by construction activities.

If any prehistoric or historic archaeological artifacts or human remains are uncovered during construction, demolition, or earthmoving activities, state law (Indiana Code 14-21-1-27 and -29) requires that the discovery be reported to the Department of Natural Resources within two (2) business days. In that event, please call (317) 232-1646. Be advised that adherence to Indiana Code 14-21-1-27 and -29 does not obviate the need to adhere to applicable federal statutes and regulations, including but not limited to 36 C.F.R. 800.

We look forward to receiving the Phase Ib plan should it be deemed necessary.

If you have questions about archaeological issues, please contact Mitch Zoll at (317) 232-3492 or mzoll@dnr.IN.gov. If you have questions about buildings or structures, please contact John Carr at (317) 233-1949 or jcarr@dnr.IN.gov.

In all future correspondence regarding the US 421 New Road Construction in Madison (Des. No. 1400918) please continue to refer to DHPA No. 18317.

Very truly yours,

Mitchell K. Zoll
Deputy State Historic Preservation Officer

MKZ:JLC:WTT:wtt

emc: Michelle Allen, Federal Highway Administration, Indiana Division
David Clarke, Federal Preservation Officer, Federal Highway Administration, Office of Project Development and Environmental Review
Carolyn Nelson, Federal Highway Administration, Office of Project Development and Environmental Review
MaryAnn Naber, Advisory Council on Historic Preservation
Michele Curran, Ph.D., National Park Service, Midwest Regional Office
Anuradha Kumar, Indiana Department of Transportation
Shaun Miller, Indiana Department of Transportation
Mary Kennedy, Indiana Department of Transportation
Patrick Carpenter, Indiana Department of Transportation
Shirley Clark, Indiana Department of Transportation
Adam Burns, Crawford, Murphy and Tilly Engineers and Consultant
Linda Weintraut, Ph.D., Weintraut & Associates, Inc.
Jason Goldbach, Weintraut & Associates, Inc. - Jason@weintrautinc.com
Mitchell Zoll, Deputy State Historic Preservation Officer, Indiana Department of Natural Resources
Chad Slider, Indiana Department of Natural Resources
Wade T. Tharp, Indiana Department of Natural Resources
John Carr, Indiana Department of Natural Resources

Appendix D: Consulting Parties

Consulting Party List

Name	Organization / Affiliation	Address	Accepted Oct 2015 Invitation
Nathan Adams	Resident	408 Meadow Lane Madison, Indiana 47250-2515	
Bob Canida	Resident / Historic Madison, Inc.	906 Filmore Madison, Indiana 47250	Yes
John Nyberg	Jefferson County Historical Society	615 West First Street Madison, Indiana 47250	Yes
Patrick Cunningham	Resident	1032 Park Avenue Madison, Indiana 47250	Yes
Michele Curran	National Park Service	Midwest Regional Office, National Park Service 601 Riverfront Drive Omaha, NE 68102	Yes
Camille Fife	Resident	Westerly Group, Inc. P.O. Box 404 Madison, Indiana 47250	Yes
Happy Smith, Linda Deluca, Madeline Elkin, Whitney Wyatt (Director)	Madison Main Street Program	P.O. Box 327 Madison, Indiana 47250	Yes
Jessica Butler	City of Madison, Office of Preservation (Madison Historic District Board of Review)	City of Madison 101 West Main Street Madison, Indiana 47250	Yes
Link Ludington	Cornerstone Society Inc	PO Box 92 Madison, Indiana 47250	Yes
Tracey Keller	Resident	1014 Park Avenue Madison, Indiana 47250-3629	Yes
Peter Woodburn and Wayne Kyle	Woodburn & Kyle Consultants	PO Box 333 Madison, Indiana 47250	Yes
	Advisory Council on Historic Preservation	401 F Street NW, Suite 308 Washington, DC 20001-2637	
Elizabeth Merritt	National Trust for Historic Preservation	The Watergate Office Building 2600 Virginia Avenue, Ste. 1100 Washington, DC 20037	Yes
Karen Nickless	National Trust for Historic Preservation	The Watergate Office Building 2600 Virginia Avenue, Ste. 100 Washington, DC 20037	
Genell Scheurell	National Trust for Historic Preservation	The Watergate Office Building 2600 Virginia Avenue, Ste. 100 Washington, DC 20037	
Greg Sekula or Laura Renwick	Indiana Landmarks--Southern Regional Office	115 West Chestnut Street Jeffersonville, Indiana 47130	Yes
John Staicer	Historic Madison Foundation	500 West Street Madison, Indiana 47250	Yes
Steven and Elizabeth Thomas	Resident	Thomas Family Winery 208 East Second Street Madison, Indiana 47250	Yes

Judith Wolf	Resident	1910 Blackmore Street Madison, Indiana 47250-2625	
Vickie Young	Resident	1032 Park Avenue Madison, Indiana 47250-3629	Yes
Gale Ferris	Jefferson County Historic Preservation Council Inc	9713 North SR 62, Canaan, IN 47224	Declined
~~Janice Barnes~~ John Nyberg	Jefferson County Historian/Jefferson Co. Historical Society	326 West State Street Madison, IN 47250-2831	
Lisa Baker for George Wickliffe (Chief)	United Keetoowah Band of Cherokee Indians	P.O. Box 746 Tahlequah, OK 74465	Yes
Eric Oosahwee-Voss	United Keetoowah Band of Cherokee Indians	P.O. Box 746 Tahlequah, OK 74465	Yes
Edwina Butler-Wolfe (Governor)	Absentee Shawnee Tribe of Oklahoma	2025 South Gordon Cooper Drive Shawnee, OK 74801	
Joseph Blanchard (THPO)	Absentee Shawnee Tribe of Oklahoma	2025 South Gordon Cooper Drive Shawnee, OK 74801	
Glenna Wallace (Chief)	Eastern Shawnee Tribe of Oklahoma	70500 E. 128 Road Wyandotte, OK 74370	
Robin Dushane (THPO)	Eastern Shawnee Tribe of Oklahoma	70500 E. 128 Road Wyandotte, OK 74370	
Larry Balber (THPO and NAGPRA Rep)	Red Cliff Band of Lake Superior Chippewas	88385 Pike Road Bayfield, WI 54814	
Cindy Winslow (THPO)	Grand Traverse Band of Ottawa and Chippewa Indians,	2605 N. West Bay Shore Drive Peshawbestown, MI 49682	
Sheila Chingwa (THPO)	Grand Traverse Band of Ottawa and Chippewa Indians,	2605 N. West Bay Shore Drive Peshawbestown, MI 49682	Yes
Alvin Windy Boy (THPO)	Chippewa-Cree Indians of the Rocky Boy's Reservation	9740 Uper Box Elder Road PO Box 230 Box Elder, MT 59521	
Melody Henry	Chippewa-Cree Indians of the Rocky Boy's Reservation	PO Box 230 Box Elder, MT 59521	Yes
William Johnson (Interim THPO)	Saginaw Chippewa Tribe of Michigan	7070 E. Broadway Mount Pleasant, MI 48858	
Diane Hunter	Miami Tribe of Oklahoma	PO Box 1326 Miami, OK 74355	Yes
Douglas Langford (Chief)	Miami Tribe of Oklahoma	PO Box 1326 Miami, OK 74355	
George Strack (THPO)	Miami Tribe of Oklahoma	PO Box 1326 Miami, OK 74355	
John P. Froman (Chief)	Peoria Tribe of Indians of Oklahoma	118 S. Eight Tribes Trail PO Box 1527 Miami, OK 74355	
Logan Pappenfort (Special Projects Managers/NAGPRA Representative)	Peoria Tribe of Indians of Oklahoma	118 S. Eight Tribes Trail PO Box 1527 Miami, OK 74355	Yes

Owen Lindauer	Acting Federal Preservation Officer	FHWA Office of Project Development & Envrionmental Review, E 76 1200 New Jersey Ave., SE Washington, DC 20590	Yes
John Carr	IDNR-DHPA	Division Director 402 West Washington Street Indianapolis, Indiana 46204	
Chad Slider	IDNR-DHPA	Division Director 402 West Washington Street Indianapolis, Indiana 46204	
Wade Tharp	IDNR-DHPA	Division Director 402 West Washington Street Indianapolis, Indiana 46204	
Mitch Zoll	Indiana SHPO Staff	Division Director 402 West Washington Street Indianapolis, Indiana 46204	Yes
Jan Vetrhus	Resident	701 East Second Street Madison, Indiana 47250	Yes
Peggy Vlerebome	Resident	809 East Second Street Madison, Indiana 47250	Yes
Aron and Roxi Burns NOW Christian and Cynthia Mejean	Residents	920 E 2nd Street Madison, Indiana 47250	Yes
Mayor Damon Welch	County	101 W. Main Street Madison, IN 47250	
Kathie Petkovic	Riverboat Inn and Suites	906 E. 1st Street Madison, IN 47250	Yes
Teri Lu Adler, RLA, ASLA	Resident	714 E. Main Street Madison, IN 47250	Yes
Happy Smith		220 Walnut Street Madison, IN 47250	Yes

Residents Attending a Consulting Party Meeting or Requesting Consulting Party Status

Name	Organization / Affiliation	Address	Participating CP
Bernard Kelley	Property Owner	926 Park Avenue	Yes
Darren & Morgan Alexander	6644 N. Bacon Ridge Road Madison, IN 47250	118 Sering Street	Yes
Madison Pilgrim Holiness Church Inc., Robert Leach	Reverend	1004 Park Avenue Madison, IN 47250	Yes
WFG Properties LLC, Rick Grote	Resident/owner	701 S Indian Cave Rd Madison, IN 47250	Yes
Fred & Judy Koehler	Resident/owner	414 Broadway Madison, IN 47250	Yes
Margaret Balough Hillery	Resident	924 Park Avenue Madison, IN 47250	Yes
Christain & Cynthia Mejean	Resident	920 E. Second Street Madison, IN 47250	Yes
Robert & Nancy Cheatham	owner of residence	904 W. Second Street Madison, IN 47250	Yes
Peter Woodburn	Woodburn & Kyle Consultants	PO Box 333 Madison, Indiana 47250	Yes
Kathy Griffin	Resident/owner	116 Sering Street Madison, IN 47250	Yes
John Kinman	Resident/owner	203 Liberty St Vevay,IN 47043	Yes

Consulting Party Response:
US 421 New Road Construction
DES No.: 1400918

You are hereby invited to be a consulting party. As a consulting party you will participate in consultation to identify and evaluate historic properties, assess effects, and resolve any adverse effects. Please complete and return this postcard. Check if you "do" or "do not" wish to be a consulting party for the following project. Thank you.

X We **do** wish to be a consulting party for US 421 New Road Construction
☐ We **do not** wish to be a consulting party for US 421 New Road Construction

Name CAMILLE FIFE
Organization THE WESTERLY GROUP, INC.
Address P.O. BOX 404
MADISON, IN 47250
Telephone Number 812-239-1107
E-mail Address camillefife@AOL.COM

PLEASE NOTE NEW ADDRESS!

RECEIVED OCT 19

Consulting Party Response:
US 421 New Road Construction
DES No.: 1400918

You are hereby invited to be a consulting party. As a consulting party you will participate in consultation to identify and evaluate historic properties, assess effects, and resolve any adverse effects. Please complete and return this postcard. Check if you "do" or "do not" wish to be a consulting party for the following project. Thank you.

X We **do** wish to be a consulting party for US 421 New Road Construction
☐ We **do not** wish to be a consulting party for US 421 New Road Construction

Name JOHN STAICER, President + Ex. Dir.
Organization HISTORIC MADISON INC.
Address 500 WEST ST.
MADISON IN 47250
Telephone Number 812 265-2967
E-mail Address hmi@historicmadisoninc.com
john@historicmadisoninc.com

RECEIVED OCT 19

Consulting Party Response:
US 421 New Road Construction
DES No.: 1400918

You are hereby invited to be a consulting party. As a consulting party you will participate in consultation to identify and evaluate historic properties, assess effects, and resolve any adverse effects. Please complete and return this postcard. Check if you "do" or "do not" wish to be a consulting party for the following project. Thank you.

- [x] We **do** wish to be a consulting party for US 421 New Road Construction
- [ ] We **do not** wish to be a consulting party for US 421 New Road Construction

Name Sheila Chingwa
Organization Grand Traverse Band of ottawa Chippewa Indians
Address 2605 N. West Bayshore Dr.
Peshawbestown, MI 49682
Telephone Number 231-534-7761
E-mail Address Sheila.Chingwa@gtbindians.com

RECEIVED OCT 19

Consulting Party Response:
US 421 New Road Construction
DES No.: 1400918

You are hereby invited to be a consulting party. As a consulting party you will participate in consultation to identify and evaluate historic properties, assess effects, and resolve any adverse effects. Please complete and return this postcard. Check if you "do" or "do not" wish to be a consulting party for the following project. Thank you.

- [x] We **do** wish to be a consulting party for US 421 New Road Construction
- [ ] We **do not** wish to be a consulting party for US 421 New Road Construction

Name Vickie Young
Organization
Address 1032 Park Avenue
Madison, IN 47250
Telephone Number 513-535-8222
E-mail Address artezian01@yahoo.com

RECEIVED OCT 19

Consulting Party Response:
US 421 New Road Construction
DES No.: 1400918

You are hereby invited to be a consulting party. As a consulting party you will participate in consultation to identify and evaluate historic properties, assess effects, and resolve any adverse effects. Please complete and return this postcard. Check if you "do" or "do not" wish to be a consulting party for the following project. Thank you.

- [x] We **do** wish to be a consulting party for US 421 New Road Construction
- [ ] We **do not** wish to be a consulting party for US 421 New Road Construction

Name Patrick Cunningham
Organization
Address 1032 Park Avenue
Madison, IN 47250
Telephone Number 812-265-8104
E-mail Address doofendugle@frontier.com

RECEIVED OCT 19

Consulting Party Response:
US 421 New Road Construction
DES No.: 1400918

You are hereby invited to be a consulting party. As a consulting party you will participate in consultation to identify and evaluate historic properties, assess effects, and resolve any adverse effects. Please complete and return this postcard. Check if you "do" or "do not" wish to be a consulting party for the following project. Thank you.

- [x] We **do** wish to be a consulting party for US 421 New Road Construction
- [ ] We **do not** wish to be a consulting party for US 421 New Road Construction

Name Logan Pappenfort
Organization Peoria Tribe of Indians of Oklahoma
Address 118 S. Eight Tribes Trail
Miami, OK 74354
Telephone Number (918) 540-2535
E-mail Address lpappenfort@Peoriatribe.com

RECEIVED OCT 19

Consulting Party Response:
US 421 New Road Construction
DES No.: 1400918

You are hereby invited to be a consulting party. As a consulting party you will participate in consultation to identify and evaluate historic properties, assess effects, and resolve any adverse effects. Please complete and return this postcard. Check if you "do" or "do not" wish to be a consulting party for the following project. Thank you.

☒ We **do** wish to be a consulting party for US 421 New Road Construction
☐ We **do not** wish to be a consulting party for US 421 New Road Construction

Name JOHN NYBERG
Organization JEFFERSON COUNTY HISTORICAL SOCIETY
Address 615 W. 1ST STREET

Telephone Number 812.265.2335
E-mail Address INFO@JCHSHC.ORG

RECEIVED OCT 2 1

Consulting Party Response:
US 421 New Road Construction
DES No.: 1400918

You are hereby invited to be a consulting party. As a consulting party you will participate in consultation to identify and evaluate historic properties, assess effects, and resolve any adverse effects. Please complete and return this postcard. Check if you "do" or "do not" wish to be a consulting party for the following project. Thank you.

☒ We **do** wish to be a consulting party for US 421 New Road Construction
☐ We **do not** wish to be a consulting party for US 421 New Road Construction

Name Jessica Butler
Organization City of Madison, Office of Preservation
Address 101 W. Main St.
Madison, IN 47250
Telephone Number 812-274-2750
E-mail Address preservation@madison-in.gov

Consulting Party Response:
US 421 New Road Construction
DES No.: 1400918

You are hereby invited to be a consulting party. As a consulting party you will participate in consultation to identify and evaluate historic properties, assess effects, and resolve any adverse effects. Please complete and return this postcard. Check if you "do" or "do not" wish to be a consulting party for the following project. Thank you.

☒ We **do** wish to be a consulting party for US 421 New Road Construction
☐ We **do not** wish to be a consulting party for US 421 New Road Construction

Name LINK LUDINGTON
Organization CORNERSTONE SOCIETY, INC.
Address P.O. BOX 92
MADISON IN 47250
Telephone Number 812-265-3714
E-mail Address LINKLUDINGTON@GMAIL.COM

RECEIVED OCT 29 2015

Consulting Party Response:
US 421 New Road Construction
DES No.: 1400918

RECEIVED 2015

You are hereby invited to be a consulting party. As a consulting party you will participate in consultation to identify and evaluate historic properties, assess effects, and resolve any adverse effects. Please complete and return this postcard. Check if you "do" or "do not" wish to be a consulting party for the following project. Thank you.

☒ We **do** wish to be a consulting party for US 421 New Road Construction
☐ We **do not** wish to be a consulting party for US 421 New Road Construction

Name Greg Sekula or Laura Renwick
Organization Indiana Landmarks
Address 115 W. Chestnut St.
Jeffersonville, IN 47130
Telephone Number 812/284-4534
E-mail Address gsekula@indianalandmarks.org

Consulting Party Response:
US 421 New Road Construction
DES No.: 1400918

You are hereby invited to be a consulting party. As a consulting party you will participate in consultation to identify and evaluate historic properties, assess effects, and resolve any adverse effects. Please complete and return this postcard. Check if you "do" or "do not" wish to be a consulting party for the following project. Thank you.

☐ We **do** wish to be a consulting party for US 421 New Road Construction
☒ We **do not** wish to be a consulting party for US 421 New Road Construction

Name Gale Ferris, Sr.
Organization Jefferson Co. Preservation Council
Address 9713 N SR 62, Canaan, In. 47224

Telephone Number (812) 839-4770
E-mail Address

RECEIVED OCT 23 2015

Consulting Party Response:
US 421 New Road Construction
DES No.: 1400918

You are hereby invited to be a consulting party. As a consulting party you will participate in consultation to identify and evaluate historic properties, assess effects, and resolve any adverse effects. Please complete and return this postcard. Check if you "do" or "do not" wish to be a consulting party for the following project. Thank you.

- ☐ We **do** wish to be a consulting party for US 421 New Road Construction
- ☐ We **do not** wish to be a consulting party for US 421 New Road Construction

Name BOB CANIDA
Organization HISTORIC MADISON, INC
Address 906 FILMORE
MADISON, IN 47250
Telephone Number 812·265·4766
E-mail Address bob@canidadentistry.com

RECEIVED OCT 26 2015

Consulting Party Response:
US 421 New Road Construction
DES No.: 1400918

You are hereby invited to be a consulting party. As a consulting party you will participate in consultation to identify and evaluate historic properties, assess effects, and resolve any adverse effects. Please complete and return this postcard. Check if you "do" or "do not" wish to be a consulting party for the following project. Thank you.

- ☑ We **do** wish to be a consulting party for US 421 New Road Construction
- ☐ We **do not** wish to be a consulting party for US 421 New Road Construction

Name Happy Smith AND LINDA DeLUCA (Whitney Wyatt - Director)
Organization MADISON MAIN Street PROGRAM
Address P.O. Box 327

Telephone Number (812) 493-4984
E-mail Address madisonmainstreetprogram@gmail.com

RECEIVED OCT 26 2015

Consulting Party Response:
US 421 New Road Construction
DES No.: 1400918

You are hereby invited to be a consulting party. As a consulting party you will participate in consultation to identify and evaluate historic properties, assess effects, and resolve any adverse effects. Please complete and return this postcard. Check if you "do" or "do not" wish to be a consulting party for the following project. Thank you.

- [x] We **do** wish to be a consulting party for US 421 New Road Construction
- [ ] We **do not** wish to be a consulting party for US 421 New Road Construction

Name Tracy Kreller
Organization Property owner
Address 1014 Park Avenue
Madison, IN 47250
Telephone Number 812-265-4428
E-mail Address tkmadison@yahoo.com

RECEIVED OCT 26 2015

Consulting Party Response:
US 421 New Road Construction
DES No.: 1400918

You are hereby invited to be a consulting party. As a consulting party you will participate in consultation to identify and evaluate historic properties, assess effects, and resolve any adverse effects. Please complete and return this postcard. Check if you "do" or "do not" wish to be a consulting party for the following project. Thank you.

- [x] We **do** wish to be a consulting party for US 421 New Road Construction
- [ ] We **do not** wish to be a consulting party for US 421 New Road Construction

Name Michele J. Curran, Ph.D.
Organization NPS MWRO
Address 601 Riverfront Drive
Omaha NE 68102
Telephone Number 402-661-1954
E-mail Address michele_curran@nps.gov

RECEIVED OCT 26 2015

Consulting Party Response:
US 421 New Road Construction
DES No.: 1400918

You are hereby invited to be a consulting party. As a consulting party you will participate in consultation to identify and evaluate historic properties, assess effects, and resolve any adverse effects. Please complete and return this postcard. Check if you "do" or "do not" wish to be a consulting party for the following project. Thank you.

- [x] We **do** wish to be a consulting party for US 421 New Road Construction
- [ ] We **do not** wish to be a consulting party for US 421 New Road Construction

Name Kelsey Nauck Myers, RPA
Organization Chippewa Cree Cultural Resources Preservation Dept.
Address P.O. Box 230, Box Elder MT 59521

Telephone Number (406) 395-4700, ext. 102
E-mail Address kelsey.myers@nei-yahw.com

RECEIVED OCT 26 2015

Consulting Party Response:
US 421 New Road Construction
DES No.: 1400918

You are hereby invited to be a consulting party. As a consulting party you will participate in consultation to identify and evaluate historic properties, assess effects, and resolve any adverse effects. Please complete and return this postcard. Check if you "do" or "do not" wish to be a consulting party for the following project. Thank you.

- ☐ We **do** wish to be a consulting party for US 421 New Road Construction
- ☐ We **do not** wish to be a consulting party for US 421 New Road Construction

Name PETER WOODBURN & WAYNE KYLE
Organization WOODBURN & KYLE CONSULTANTS
Address PO BOX 333
MADISON IN 47250
Telephone Number 812-265-6551
E-mail Address PATSW@WOODBURNKYLE.COM

RECEIVED OCT 28 2015

Consulting Party Response:
US 421 New Road Construction
DES No.: 1400918

You are hereby invited to be a consulting party. As a consulting party you will participate in consultation to identify and evaluate historic properties, assess effects, and resolve any adverse effects. Please complete and return this postcard. Check if you "do" or "do not" wish to be a consulting party for the following project. Thank you.

☒ We **do** wish to be a consulting party for US 421 New Road Construction
☐ We **do not** wish to be a consulting party for US 421 New Road Construction

Name Steven L - Thomas
Organization The Thomas Family Winery
Address 208 E. Second St
Madison IN 47250
Telephone Number 812 273 3255
E-mail Address steven@ThomasFamilyWinery.US

RECEIVED NOV 09 2015

Consulting Party Response:
US 421 New Road Construction
DES No.: 1400918

You are hereby invited to be a consulting party. As a consulting party you will participate in consultation to identify and evaluate historic properties, assess effects, and resolve any adverse effects. Please complete and return this postcard. Check if you "do" or "do not" wish to be a consulting party for the following project. Thank you.

☒ We do wish to be a consulting party for US 421 New Road Construction
☐ We do not wish to be a consulting party for US 421 New Road Construction

Name Lisa Baker
Organization United Keetoowah Band of Cherokee Indians in OK
Address PO Box 746
Tahlequah OK 74465
Telephone Number 918-822-1952
E-mail Address UKBTHPO-LARVE@yahoo.com
(all lower case)

RECEIVED NOV 17 2013

Consulting Party Response:
US 421 New Road Construction
DES No.: 1400918

You are hereby invited to be a consulting party. As a consulting party you will participate in consultation to identify and evaluate historic properties, assess effects, and resolve any adverse effects. Please complete and return this postcard. Check if you "do" or "do not" wish to be a consulting party for the following project. Thank you.

- [x] We do wish to be a consulting party for US 421 New Road Construction
- [ ] We do not wish to be a consulting party for US 421 New Road Construction

Name TERI LU ADLER, RLA, ASLA
Organization
Address 714 E. Main St., Madison, IN 47250

Telephone Number 812-274-0557
E-mail Address luteri162@gmail.com

RECEIVED DEC 02 2015

Consulting Party Response:
US 421 New Road Construction
DES No.: 1400918

You are hereby invited to be a consulting party. As a consulting party you will participate in consultation to identify and evaluate historic properties, assess effects, and resolve any adverse effects. Please complete and return this postcard. Check if you "do" or "do not" wish to be a consulting party for the following project. Thank you.

- [x] We **do** wish to be a consulting party for US 421 New Road Construction
- [ ] We **do not** wish to be a consulting party for US 421 New Road Construction

Name Diane Hunter
Organization Miami Tribe of Oklahoma
Address P.O. Box 1326
Miami, OK 74355
Telephone Number 918-541-8966
E-mail Address dhunter@miamination.com

RECEIVED DEC 23 2015

Consulting Party Response:
US 421 New Road Construction
DES No.: 1400918

You are hereby invited to be a consulting party. As a consulting party you will participate in consultation to identify and evaluate historic properties, assess effects, and resolve any adverse effects. Please complete and return this postcard. Check if you "do" or "do not" wish to be a consulting party for the following project. Thank you.

- ☑ We do wish to be a consulting party for US 421 New Road Construction
- ☐ We do not wish to be a consulting party for US 421 New Road Construction

Name Jefferson County Commissioners
Organization Robert Little - Mark Cash - Norbert Schafer
Address 300 East Main St. Room 103

Telephone Number 812-265-8954
E-mail Address

RECEIVED FEB 08 2016

From: **Linda Weintraut** <linda@weintrautinc.com>
Date: Fri, Oct 16, 2015 at 4:41 PM
Subject: Re: Des. No.: 1400918 - section 106
To: Jan Vetrhus <janvetrhus@gmail.com>
Cc: "Carpenter, Patrick A" <pacarpenter@indot.in.gov>, Link Ludington <linkludington@gmail.com>, camille fife <camillefife@aol.com>

Thank you, Jan.

We shall add you to the list and look forward to consulting with you on this project.

Linda Weintraut

On Fri, Oct 16, 2015 at 4:39 PM, Jan Vetrhus <janvetrhus@gmail.com> wrote:

> Dear Pat and Linda, I received a postcard as a consulting party to the president of the Cornerstone Society - an affiliate of Indiana Landmarks. Since I am also a candidate for Mayor of Madison, IN, I have stepped down as president and the current president will be representing Cornerstone in the 106 process.
>
> I also live in the affected area and want to register as a consulting party myself. Please add me to your list.
>
> Jan Vetrhus
> 701 E. 2nd Street
> Madison, IN 47250
> 812-599-3447

--
Linda Weintraut, Ph.D.
Weintraut & Associates, Inc.
PO Box 5034
4649 Northwestern Drive
Zionsville, Indiana 46077
317.733.9770 ext. 310

www.weintrautinc.com

From: "Linda" <linda@weintrautinc.com>
To: "Peggy Vlerebome" <pvlereb@cinergymetro.net>
Cc: "Adam Burns" <aburns@cmtengr.com>, "Patrick A Carpenter" <pacarpenter@indot.in.gov>, bethany@weintrautinc.com
Sent: Friday, October 16, 2015 7:06:29 PM
Subject: Re: Des. No.: 1400918 - section 106

Peggy,

Thank you for your email. What is your address and telephone number to add to our list?

We look forward to talking with you during the consultation process.

Linda Weintraut

Sent from my iPad

On Oct 16, 2015, at 5:28 PM, Peggy Vlerebome <pvlereb@cinergymetro.net> wrote:

> Please add me to your list of consulting parties.
> Thank you.
> Margaret (Peggy) Vlerebome

From: Roxi Burns [mailto:burns.roxi@gmail.com]
Sent: Tuesday, October 27, 2015 8:57 AM
To: Allen, Michelle (FHWA); Burns, Aron
Subject: Madison, IN (Des No. 1400918)

Hello Michelle,

We live on 2nd St, very close to the Madison-Milton bridge, where we understand you are in the planning stage of a new ramp coming off the bridge. We would like to be part of your consulting party, and kept up to date on any ideas and changes that may be decided upon.

Aron and Roxi Burns

920 E 2nd St

Madison, IN 47250

burns.roxi@gmail.com

812-599-1523 Roxi cell

502-489-4373 Aron cell

Thank you very much,

Roxi Burns

To: Carpenter, Patrick A
Subject: Bridge Approach Section 106

**** This is an EXTERNAL email. Exercise caution. DO NOT open attachments or click links from unknown senders or unexpected email. ****

Riverboat Inn and Suites

906 E 1st Street

Madison, IN 47250

812-265-2361

Nov. 10, 2015

Hi Patrick,

I would like to be a consulting party during the bridge project. I own the Riverboat Inn & Suites Hotel, which is located on the riverfront at the foot of the bridge with access being from 421.
Additionally, I own a house on First street which is 2 houses west of 421. Then of course there is the "Dry Dock" located at the corner of First and 421.
I would like to always be aware of and party to what is going to take place regarding the new approach.

I can be reached via cell 850-830-9579 or the hotel phone and of course email.

Thank You ,

Kathie Petkovic

WEINTRAUT & ASSOCIATES, INC.

Consulting Party Meeting
US 421 New Road (Des. No.: 1400918)
Madison, Jefferson County, Indiana
December 3, 2015 at 1:00 pm

AGENDA

- Welcoming Remarks – Introductions
- Update on Engineering & Overall Schedule
- Section 106 Process/Section 110
- Cultural Resources Study (Archaeology & Structures)
- Consulting Party Goals & Objectives
- Action Items/Next Steps

Consulting Party Meeting
US 421 New Road (Des. No.: 1400918)
Madison, Jefferson County, Indiana
December 3, 2015 at 1:00 pm
Meeting Summary

Bob Canida, Resident
Whitney Wyatt, Madison Main Street Program
Greg Sekula, Indiana Landmarks – Southern Regional Office
John Staicer, Historic Madison, Inc.
Link Ludington, Cornerstone Society, Inc.
Peter Woodburn, Woodburn & Kyle Consultants
Wayne Kyle, Woodburn & Kyle Consultants
Camille Fife, Resident
Jan Vetrhus, Resident
Peggy Vlerebome, Resident
Aron Burns, Resident
Teri Lu Adler, Resident
Patrick Cunningham, Resident
Mike Flint, Flint Group
John Kinman, Business Owner
Elizabeth Kinman, Business Owner
Margaret Balough, Resident
Jessica Butler, City of Madison
Sandy Thurman, Resident/Library
Jim Olson, Resident
Shaun Miller, Indiana Department of Transportation (INDOT)-Cultural Resources Office (CRO)
Mary Kennedy, INDOT-CRO
Whitney Carlin, INDOT
Chris Waldner, INDOT
Mohammad Hajeer, Federal Highway Administration (FHWA)
John Carr, Indiana Department of Natural Resources/Division of Historic Places & Archaeology (IDNR/DHPA) and State Historic Preservation Officer (SHPO)
Adam Burns, Crawford Murphy & Tilly (CMT)
Cassie Rieter, CMT
Bethany Natali, Weintraut & Associates (W&A)
Linda Weintraut, Weintraut & Associates

Participants via telephone:
Kelsey Noack Myers, Chippewa-Cree Indians of the Rocky Boy's Reservation
Michelle Allen, FHWA
Elizabeth Merritt, National Trust
Michele Curran, National Park Service

Meeting summary prepared by W&A

Linda Weintraut, W&A, opened the meeting, welcoming the participants. After introductions, Weintraut briefly discussed the agenda and said that the bulk of the meeting would be devoted to discussion.

Adam Burns, the project manager for CMT, told the gathering that the project is still in its very early stages. There was a prior study conducted on this approach (Milton-Madison Bridge Project) but that study is a few years old and CMT is starting with a blank slate. They are looking for input from consulting parties.

Weintraut then provided an overview of the Section 106 process and stated that this project is also subject to Section 110 overview. The Memorandum of Agreement from the Milton Madison Project had stated that when the US 421 approach study was conducted, if federal money was not involved, a process parallel to Section 106 would occur. Federal money is involved; Section 106 consultation has been initiated. The following have been invited to consult on the Section 106 process: Consulting Parties from the Milton-Madison Bridge Project (Indiana side); groups/organizations that might have an interest; Native American Tribes with ancestral connections to Indiana; and residents of National Historic Landmark (NHL) District or surrounding area that have requested to be Consulting Parties.

Weintraut said that no reports have yet been produced. A good context was included in the NHL nomination; however, if W&A feels that there is additional information that needs to be added for the area outside the limits of the NHL but within the Area of Potential Effects (APE), that additional information will be part of the historic property report. She said that the consultants recognize and respect that this community has a unique history; the goal is to engage the community in crafting a good outcome for the project.

Bethany Natali, W&A, said that the Cultural Resource Study has begun but reiterated that no reports have yet been produced. The W&A archaeologist has completed a records search of those resources within a one-mile radius: pending the selection of the preferred alternative, an archaeological field reconnaissance may be necessary. The aboveground APE includes a rough boundary of Main Street/Sering Street/Park Street, St. Michael's Avenue, Ferry Street, and the Ohio River. There are about two hundred properties in this area, most of which were constructed prior to 1887. The most represented building style is Federal followed by Italianate, Shotgun, and Gable Front. Much of the APE is within the Madison NHL District and Madison National Historic Register of Historic Places District. The far-east side is not within the NHL district. Two resources are also included in the Historic American Building Survey (HABS): the former Eagle Cotton Company Mill and the row houses along E. Main Street.

The meeting then opened for discussion.

Consulting parties noted the US 421 approach is important because it serves as a gateway to Madison and the NHL. The entrance should highlight and respect the history of the area.

Consulting parties said that the east end of Madison, included in the aboveground APE, was historically and remains a working class neighborhood. The area is not just a collection of individual buildings, but a distinct neighborhood and that continuity needs to be respected and retained in a solution.

In regard to current conditions that adversely impact the area, residents expressed concern about the truck traffic coming off the bridge approach along Main/Sering/Park, Baltimore, and Second Street. Some homeowners have experienced hairline fractures in walls/plaster, and/or separation of wallpaper due to these vibrations from traffic. Truck traffic is/has been detrimental to the east side neighborhood and historic properties, and to the community of the historic east side neighborhood. Madison is a walking/biking city, with residents and visitors using bicycles, golf carts, or walking in addition to using automobiles. Currently, drivers often ignore posted speed limits or make illegal/unsafe turns in the study

area, making non-motorized transportation difficult or dangerous. A bridge approach design that creates an elevated earthen berm or other elevated design would further cut off the ability of east side residents to safely and easily travel to the west.

Another concern was the noise impacts, especially from large trucks/semis coming off the bridge.

Second Street was also the historic route of the trolley so it has been an important thoroughfare in Madison.

In past studies, Camille Fife expressed the opinion that models have not been sufficiently sensitive to detect the impact of truck noise and or vibration to the City's historic properties. She asked if models for measuring vibration and noise have changed in the past few years.

Abandoned or neglected houses have been an unintended consequence of cutting off access of through streets. Wayne Kyle, Woodburn & Kyle, cited the example of North Jefferson where nice homes have been abandoned or demolished because trucks have been routed through the street and the street no longer has good access.

One consulting party asked if the City had decided on an alternative. Mike Flint, a consultant for the City of Madison, said that relinquishing negotiations (for US 421) have taken place with INDOT. The INDOT project managers said that this is an INDOT project with no preferred alternative.

Consulting parties again asked for confirmation that this environmental study is a "fresh start" and that no alternatives have been pre-selected. Some discussion in town, and during the previous mayoral campaign, may have given some residents the impression that the route for the approach project has already been decided. INDOT/CMT confirmed that no alternative has been selected. A baseline cost was established to bid the project as $12 million. Link Ludington, Cornerstone Society, asked if a "no build" alternative is included in this consideration. Burns said that all alternatives are still on the table and a "no build" alternative will be considered.

Weintraut brought the discussion back to issues associated with the National Historic Preservation Act (NHPA). The NHPA says that federal policy should be such that modern society and historic and archaeological resources can exist in "productive harmony." She noted that the consulting parties had raised some of the adverse impacts of the current situation and asked what kind of solution would lead to productive harmony.

Fife and Ludington said that the NHL could not be impacted. Weintraut asked if there were resources within the NHL that should not be touched. Fife said none could be impacted.

Kelsey Noack Myers, Chippewa-Cree Indians of the Rocky Boy's Reservation, noted there are tribes with a demonstrated interest in this area prior to the Indian Removal Act. The Ohio River is one example of a resource important to the Chippewa-Cree and others. She asked for more content during consulting party meetings about archaeological resources within the project area. Weintraut said that the archaeology report will be distributed to agencies and to Tribes but not to the wider group of consulting parties since it contains confidential information. Future meetings will have additional information about Native American history.

W&A confirmed that there are four Tribes who have agreed to be consulting parties.

John Staicer, Historic Madison Inc. noted that this project is not "elective surgery" but is being forced upon the City by larger forces. The project is cutting into the city's "backyard" and it is important to remember the impact of the project to the community when considering alternatives.

Michele Curran, NPS, reminded that Section 110 must be considered in this project due to the NHL. Adverse impacts must be avoided on the NHL. Weintraut asked if Section 110 said that a NHL must be given full consideration in planning.

John and Elizabeth Kinman asked a question about zoning (which is not a Section 106 issue). They said that the uncertainty surrounding the project makes it difficult to decide what to do with business. Another consulting party asked if business owners were invited to be consulting parties. CMT replied that other meetings, such as public information meetings, are more appropriate for those kinds of questions than a Section 106 meeting.

John Carr, IDNR/DHPA asked if the APE would expand or contract based on the alternative. W&A said that it would. (CMT noted a preferred alternative was not expected until late January or February 2016.)

Consulting parties also asked if new resources have been developed since the bridge project for traffic modeling and calming. CMT stated that engineers are now better educated on traffic calming than they were five years ago. A new traffic study was completed this year. The current traffic is 11,050 and the 2040 projection year is 15,900. Consulting Parties requested previous traffic counts for comparison.

Fife asked Weintraut to explain 4(f) and whether this is a 4(f) situation. Weintraut said that 4(f) is part of the NEPA process, not Section 106. Under Section 4(f), if the "use" a historic property (or a park, for example) is converted to a transportation use, then a range of alternatives must be explored and evaluated for whether they are prudent and feasible. They also look for least harm. Weintraut said that 4(f) was not part of W&A's charge for this project.

Weintraut concluded the meeting by asking the consulting parties to identify resources that they felt are so important to the community that they should not be impacted. Fife said that the entire NHL is important as a whole.

Weintraut noted that those at the meeting had expressed concerns over the present US 421 and the impact that it has on individual resources. Impacts include: drainage, noise, vibrations, and a situation that inhibits walkability and the cohesiveness of neighborhoods. She summarized that in the consulting party meeting the consulting parties expressed a desire for a project that is pedestrian friendly and honors the NHL and the working-class character of the east side of Madison. The entrance is important to the community.

Whitney Wyatt, Mainstreet, noted that the organization that she represents is interested in the materials used in the design. They do not want the project to look like a highway; no molded curbs.

The next meeting will be held sometime after the first of the year, once a range of alternatives have been explored. Weintraut indicated that the meeting minutes would be distributed to all consulting parties, regardless of attendance. Since there were no additional issues raised, the meeting was adjourned

This summary reflects the result of informal consultation between the agencies, project team members, and consulting parties at the time of the meeting. Accordingly, the information contained in this summary is considered to be pre-decisional and deliberative.

NOTE: Please advise in writing of any corrections/additions to the minutes. If no written response is received within seven (7) days of receipt of these minutes, they will be considered approved as written.

Consulting party request received December 3, 2015 at Public Open House

PROJECT 421
Gateway to Madison

Comments or questions:

Happy Smith
(Harriet)

3316 rowland@
gmail.com

Name (optional): _____

☐ **Yes, I would like to receive the Project 421 e-newsletter**

E-mail address: _____

Consulting Party Meeting
US 421 New Road (Des. No.: 1400918)
Madison, Jefferson County, Indiana
February 16, 2016 at 1:30 pm

AGENDA

- Welcoming Remarks – Introductions

- Cultural Resource Update – results of studies
  - Structures
  - Archeology

- Alternatives Analysis
  - Overview (AB)
  - Table discussion
  - Group discussion of Effects of Alternatives on Historic Properties

- Schedule/Action Items/Next Steps
  - Comments on HPR back to W&A by March 1st

8790 Purdue Road / Indianapolis, IN 46268 / Phone: 317.492.9159

Consulting Party Meeting
US 421 New Road Project
(Des. No.: 1400918)
Madison, Jefferson County, Indiana
February 16, 2016 at 1:30 pm
Meeting Summary

Greg Sekula, Indiana Landmarks – Southern Regional Office
John Staicer, Historic Madison, Inc.
Link Ludington, Cornerstone Society, Inc.
Camille Fife, Resident
Jan Vetrhus, Resident
Peggy Vlerebome, Resident
Aron Burns, Resident
Teri Lu Adler, Resident
Sandy Thurman, Resident
Happy Smith, Madison Main Street Program
Vickie Young, Resident
Michele Curran, Ph.D., National Park Service
Michelle Allen, Federal Highway Administration (FHWA)
Shaun Miller, Indiana Department of Transportation (INDOT)-Cultural Resources Office (CRO)
Patrick Carpenter, INDOT-CRO
Mary Kennedy, INDOT-CRO
Whitney Carlin, INDOT
Chris Walhman, INDOT
John Carr, Indiana Department of Natural Resources/Division of Historic Places & Archaeology (IDNR/DHPA) and State Historic Preservation Officer (SHPO)
Adam Burns, Crawford Murphy & Tilly (CMT)
Cassie Rieter, CMT
Gerald Bollinger, CMT
Eric Arthur, CMT
Linda Weintraut, Ph.D., Weintraut & Associates (W&A)
Jason Goldbach, W&A
Bethany Natali, W&A

Participants via telephone:
Diane Hunter, Miami Tribe of Oklahoma
Falene Russette, Chippewa-Cree Indians of the Rocky Boy's Reservation

Meeting summary prepared by W&A

Michelle Allen, FHWA, welcomed attendees to the meeting and explained that because this project is using federal funding, it is subject to the National Historic Preservation Act (NHPA).

After introductions Linda Weintraut, W&A, said that this project is subject to both Section 106 and Section 110 of the NHPA. The purpose of the meeting is to discuss the efforts to identify historic properties. She explained that Section 106 process is a sequential process. The first step, initiation, has taken place. Consulting parties have been identified and invited to participate in the project. The process is now in the second step, the identification of historic properties. W&A has prepared a historic property report (HPR) as part of the identification efforts and has conducted background studies for archaeology.

Section 110 requires that federal agencies take into account to the fullest extent in planning projects involving a National Historic Landmark. Weintraut noted that there are both a National Historic Landmark (NHL) and National Register of Historic Places (NRHP) District within the project's Area of Potential Effects (APE).

Bethany Natali, W&A, discussed the National Register District and NHL. The nomination for the Madison NRHP District was prepared in 1973 with areas of significance being Architecture, Commerce, and Transportation and a period of significance from 1806 to 1860. The nomination did not include a list of Contributing and Non-Contributing designations for individual properties. W&A met with the NRHP survey and registration staff of the Division of Historic Preservation and Archaeology (DHPA) and the staff of the State Historic Preservation Officer (SHPO) to discuss adding areas of significance and possibly extending the period of significance. From that consultation, W&A has recommended extending the period of significance to 1970. That date is fifty years from the year 2020, which is when the project would likely take place. W&A also is recommending that two themes be added the district: Industry and Recreation. Natali noted that the additions to the NRHP District are for this project only. It does not change the status or any aspect of the Madison National Register District (District), but helps fully consider the effects of the project on the district. These discussions also helped W&A assign Contributing or Non-Contributing status to individual properties within the District. In cases where the NHL and Districtoverlap, the Contributing and Non-Contributing designations established for the NHL are also used for the District with two exceptions: the Service Station at 901 E. Second Street and Hillside Inn at 831 E. Main Street are both considered Contributing to the Distirct, but are not contributing to the NHL.

Natali stated there are 169 Contributing and 52 Non-Contributing resources within the project's Area of Potential Effects (APE). There are also three resources that have been demolished since the NHL designation (based on 2005 aerial photographs). The APE includes buildings (residences, hotels, service stations, businesses, and religious buildings), structures (culverts, drains, walls), sites (ruins of the first Hillside hotel), and objects (stone gate posts, fences).

Michele Curran, NPS, stated that the Indiana Historic Sites and Structures Inventory numbers used in the report should be removed from the discussion of the NHL, since the designations of "Notable" and "Outstanding" do not apply to the NHL. She stated all captions related to IHSSI ratings should be removed from the photographs of the NHL. She also stated that Section 110 of the NHPA was not mentioned in the HPR.

Jason Goldbach then discussed archeological studies and cultural resources management. Goldbach stated that although no reconnaissance has been conducted and no report sent to the SHPO, Madison's location on the river indicates a potential for prehistoric and historic archaeological resources. Large rivers like the Ohio have been a focal point of human occupation in eastern North America beginning over 10,000 years ago during the Paleoindian period. This would have been an advantageous area for people to live since it has a water source along which prehistoric tribes could travel and find favorable hunting. River valleys like the Ohio were attractive to prehistoric peoples for multiple reasons, and were inhabited throughout all periods into historic times. Madison developed early in our country's history, before the advent of archaeology or cultural resource management. So, while there are no known archaeological sites within the preliminary study area, that is more a function of the fact that this area was settled before archaeological studies were formalized. Archeological reconnaissance will begin when the preferred alternative has been identified.

Adam Burns then presented a brief overview of the nine alternatives under consideration. The group then divided into smaller groups for discussion of individual alternatives for fifteen-minute power discussions of each type of alternative. The alternatives were grouped by four categories: Existing Alignment, Grade-Separated Alignment, At-Grade Alignment, and Alignment Change.

After that discussion, everyone reconvened for a larger group discussion. Curran stated that alternatives 1 and 9 appeared to be the worst alternatives while 6A and 6B seemed to be the least adverse. An overpass would have a strong impact on the NHL.

Jan Vetrhus, resident, stated that the alternatives with a bridge overpass should include some treatment options that would blend with the neighborhood.

Curran asked the length and height of the retaining wall option. CMT replied that the wall would be ten to fifteen feet tall and between 400 and 800 feet in length. Curran said that a fifteen foot tall retaining wall would be a problem.

Camille Fife, resident and consultant, noted that there are existing issues for properties owners along Main Street. Speed and vibration affect historic properties, and many trucks are traveling at high speeds from the new bridge and/or are jumping the sidewalks and hurting the structural integrity of historic properties.

Participants asked if the project could be moved farther north in the hillside. Burns stated that would require higher walls.

Many participants stated they did not prefer the "No Build" options, but there was not a consensus.

Teri Lu Adler, resident, stated that Alternative 8 with a roundabout is not a good alternative but that it does go behind much of the residential neighborhood associated with the NHL to the west. She also stated that while she understands the problems associated with the bridge alternatives, access is a problem with the existing roadway. Design treatments (limestone, wrought iron), or incorporating an "entry feature" such as a signage could make that type of alternative more acceptable. While 6A and B are more at-grade, the intersection still presents access issues. She expressed the belief that one alternative should have gone farther east (to tie in with SR 56).

Greg Sekula, Indiana Landmarks, asked what the specific impacts to Contributing and Non-Contributing properties would be. Weintraut said that at this stage, "impacts" have been identified but it is not clear what the impacts are (ie: small amount of lawn or demolition). She said that sheer numbers are not representative of what the impact will be to the district. However, with the caveat that the number of impacted resources includes Non-Contributing as well as Contributing and objects such as culverts and gate posts, she asked CMT to provide preliminary numbers of impact; CMT cautioned that these are both Contributing and Non-Contributing. Michelle Allen noted that we are still in the identification stage of the process, and that the identification needs to be completed before considering impacts.

Curran stated the exhibits needed to be larger, have street labels, use an "x" to show where a property would be taken, and a minus to show where land would be acquired. Shaun Miller, INDOT-CRO, indicated the label for "contributing to NRHP/Non-Contributing to NHL" is not in the Legend.

Jan Vetrhus noted that Alternative 3 does not fully consider the historic properties (meaning the Contributing and Non-Contributing resources within the districts) west of the APE. The consultants agreed that it did not, but W&A was charged with looking at the area shown as a "preliminary study area." CMT responded that although Alternative 3 was shown on mapping, its series of stops and starts mean that it does not lesson the vibration and noise impacts of the project (as discussed in the small group discussion) so it will likely be discarded.

Fife said she agreed with Weintraut's point that we look beyond the "number" of impacted properties. When you direct traffic on a small road through a residential historic district, you are impacting every property. The impact is really on the NHL.

Jan Vetrhus stated it is important to show the public design "treatment" options associated with overpasses and bridges so that they do not dismiss an option based on a generic design. The project team indicated that we are not at a point where design treatment options can be considered; that will come later. Weintraut said that putting forth treatments now locks down the number of ideas that are considered since people get a vision that looks at details instead of the larger picture.

Curran noted that the walls or bridges associated with some alternatives within the NHL are adverse effects that would be mitigated through treatment options in a Memorandum of Agreement.

Sandy Thurman asked if there are construction methods or materials that could negate the vibrations. Burns said those options could be considered.

At 3:40, Weintraut adjourned the meeting by thanking everyone for a lively discussion. She asked for comments to be submitted on the HPR and the preliminary alternatives.

This summary reflects the result of informal consultation between the agencies, project team members, and consulting parties at the time of the meeting. Accordingly, the information contained in this summary is considered to be pre-decisional and deliberative.

NOTE: Please advise in writing of any corrections/additions to the minutes. If no written response is received within seven (7) days of receipt of these minutes, they will be considered approved as written.

WEINTRAUT & ASSOCIATES, INC.

Consulting Party Meeting
US 421 New Road (Des. No.: 1400918)
Madison, Jefferson County, Indiana
City Center, Chamber Room
August 11, 2016 at 9:00 am

AGENDA: Morning

- Welcoming Remarks – Introductions
- Screening of Alternatives
- Overview of Section 106/Section 110/ 4(f)
- Update on Archaeology & Discussion of Effects Memo
- City Walk: On-the-Ground Effects Discussion
- Lunch

AGENDA: Afternoon

- Recap of morning
- Mitigation Discussion: Breakout Groups
- Mitigation Discussion: Large Group
- Next Steps? Action Items?

Consulting Party Meeting
US 421 New Road Project (Des. No.: 1400918)
Madison, Jefferson County, Indiana
City Building, Chamber Room
101 West Main Street
August 11, 2016
9:00 am to 3:00 pm
Meeting Summary

Attendees:	Organization / Address
Tracy Keller	1014 Park Avenue
Vickie Young	1032 Park Avenue
MaryAnn Naber	Advisory Council on Historic Preservation (ACHP)
Chris and Cindy Mejean	920 East Second Street
Jim Ude	Indiana Department of Transportation (INDOT)—Seymour District
Jason Goldbach	Weintraut & Associates, Inc. (W&A)
Maddi Elkin	Madison Main Street Program
Samantha Travis	National Park Service (NPS) Intern
Greg Sekula	Indiana Landmarks
Robert Leach	Pilgrim Holiness Church
Michele Curran	National Park Service (NPS)
Bernard Kelly	926 Park Avenue
John Carr	Indiana Department of Natural Resources, Division of Historic Preservation & Archaeology (IDNR, DHPA)
Teresa Adler	214 East Main Street
Camille Fife	608 Mulberry Street
Susan Stephens	918 East Second Street
Link Ludington	Cornerstone Society, Inc.
Peggy Vlerebome	809 East Second Street
Maggie Balough Hillery	924 Park Avenue
Michelle Allen	Federal Highway Administration (FHWA)
Patrick Carpenter	INDOT—Cultural Resources Office (CRO)
Jan Vetrhus	701 East Second Street
Bob Canida	906 Filmore / 904 East First Street
Ashley Taylor	INDOT—CRO Intern
Shaun Miller	INDOT—CRO
Wade Tharp	IDNR, DHPA
Rick Grote	112 Sering Street
Peter Woodburn	

John Kinman	
Kathy Griffin	116 Sering Street
John Nyberg	Jefferson County Historical Society
Elizabeth Merritt	National Trust for Historic Preservation
Fred and Judy Koehler	414 Broadway Street (jkoehlermd@cinergymetro.net)
Melody Henry	Chippewa Cree Cultural Resources Preservation Department
John Stacier	Historical Madison, Inc. (HMI)
Linda Weintraut	W&A
Whitney Carlin	INDOT-Seymour District
Chris Walhman	INDOT-Seymour District
Devin Stettler	United Consulting
Eric Arthur	Crawford, Murphy & Tilly (CMT)
Adam Burns	CMT
Cassie Reiter	CMT
Whitney Pflanzer	Borshoff

Michelle Allen (FHWA) opened the meeting at 9:00 am by welcoming everyone. She told the participants that it would be a long day with a full agenda so it would be important to stay on topic. With agencies coming from long distances, a day-long meeting makes the best use of everyone's time; this will likely be the last "in person" meeting for this group. She then asked the participants to introduce themselves and their affiliated organization.

Linda Weintraut, W&A, outlined the day's agenda and provided logistical information. MaryAnn Naber, Advisory Council on Historic Preservation, requested that the walking tour of the Area of Potential Effects (APE) be conducted first before the day became too hot. Weintraut said that there were some items that needed to be presented prior to the walking tour in order that the walking tour effective but it was her intent to move forward as quickly as possible.

Weintraut introduced Jim Ude, the INDOT representative for the Seymour District, who was on hand to answer questions that consulting parties had posed over the past days about a separate paving and striping project within the National Historic Landmark (NHL) and National Register (NRHP) districts. Ude said that the project was a maintenance project. There was no purchase of right of way; it dealt with surface of pavement and upgrading ADA ramps on corners to standards. Ude said that he had been told that oscillating rollers, which are appropriate measures to minimize vibrations, were used. Property owner Jan Vetrhus asked about the striping pattern changing the flow of traffic and narrowing the road from four to two lanes and noted the striping directed traffic to the river instead of the bridge. Property owner Peggy Vlerebome asked if the changing traffic pattern redirected US 421 along St. Michaels Avenue instead of Baltimore Street. Link Ludington, Cornerstone, asked if the striping had been misplaced. Property owner, Teri Lu Adler, who lives adjacent to where the resurfacing had occurred, said that the vibrations from the contractor's machinery were so

great that items on shelves to the rear of her home vibrated off the shelf. Ude said he had not yet been to the project site but would look into it; there was no rerouting of US 421 for this project. Chris Wahlman, INDOT, said he would take the information back to INDOT and get answers on the consulting parties' questions.

After Ude left, discussion returned to this project: Adam Burns, CMT discussed the screening of alternatives. He said that the range of original alternatives (9 in total) had gone through an initial screening process. After that screening process, the no build and alternatives 4, 6, and 8 were carried forward. The engineers then applied a secondary tier of metrics to evaluate the project. During the secondary tier of analysis, alternative 8 proved less feasible, and the no build did not meet Purpose and Need. Therefore, the discussion and comments at this meeting should focus alternatives 4 and 6 since they appear to be stronger alternatives at the present time. If alternative 8 were to come back on the table, there would need to be another consulting party meeting to discuss it in detail.

Maddi Elkin, the representative from Madison Main Street Program, asked Burns to describe both alternatives 4 and 6. Burns said that alternative 4 is grade separated and would have a bridge carrying US 421 over Second Street. The grade increase would begin north of First Street. Alternative 6 is "at-grade" and would extend Harrison north and cut into the bluff to tie into Main Street.

Ludington asked about alternative 6b, the signalized intersection. Burns explained that CMT conducted a "traffic signal warrant." The signal would be warranted in the design year of 2040 but not in the construction year. Property owner Vicki Young said that there would need to be a signal in place because it would be difficult for a person to cross the intersection in a wheelchair or if someone was pushing a stroller or traveling with children. Burns said engineers are somewhat limited by design standards but this could be an item for mitigation. Naber asked if there may be design exceptions that would allow the installation of signals here.
Adler inquired about "grade change." Burns said there would be twenty-three feet of grade separation between State Road (SR) 56 and the intersection of Second Street and Harrison. The grade on the bridge option was 5 percent on and on the at-grade option the grade was 4 percent. The normal eye would not be able to tell the difference.

Burns also discussed noise changes. The threshold from FHWA where noise is an impact is 67 dBA, and in Indiana, consideration is given at 66 dBA, as a number approaching 67. Within the US 421 study limits, twenty-three homes have greater than 67 dBA. In all alternatives, the project would reduce average noise in the corridor and significantly reduce the number of homes that are impacted. From a noise standpoint, the at-grade is better than grade separated, but it is marginal. Both are better than existing.

Curran asked about the height of the bridge. Burns said that it is about as high as the windows in the meeting room, but a better representation was planned for the walking tour. Curran noted that part of the charm of this NHL is its walkability, and thus, a pedestrian traffic signal

was warranted. The lack of a pedestrian traffic signal would adversely affect the district. John Stacier, Historic Madison, noted that both alternatives would have an adverse effect; Weintraut and Burns agreed. The estimated construction time for both alternatives was similar – starting in 2019 and finishing in 2020. Adler asked about the underlying bedrock. Burns said it is shale and ripable but that more geotechnical studies will occur to confirm. Burns also noted that the City had published a comprehensive plan identifying alternative 6 as the preferred. Burns noted that the City's plan and decision making process of the National Environment Policy Act (NEPA) occur separately.

Vetrhus asked about vibration analysis. Burns has researched but not found a reliable non-destructive analysis technique that could be performed before construction. FHWA has guidance and other literature about "reasonable thresholds" for working within historic district. These would be used to set the standard for construction and then monitoring activity during construction. "Damages" could be assigned for going over a threshold. Construction activities would vary somewhat between the alternatives; driving piles would be associated with the bridge and would produce greater vibration. The team could entertain different option – maybe a drilled shaft, but that would be more costly. These options can be weighed as the project moves forward and could be made part of the Memorandum of Agreement (MOA).

The group then proceeded outside for a walking tour led by Weintraut.

- Stop 1 looked from Main Street at Baltimore Streets to the Hillside Inn; at this view both alternatives 4 and 6 will be at ground level at this location.
- Stop 2 looked from Baltimore at Second Street; renderings illustrated the view to the bridge as it is elevated for alternative 4. Alternative 4 maintains connectivity for pedestrians but it bifurcates the historic district visually. Alternative 6 would be on the same grade at this location.
- Stop 3 looked toward Harrison where the height of the roadway should be similar to that now with both alternatives. There are no plans for pedestrian crosswalk striking here.
- Stop 4 looked toward Harrison from Fillmore Alley; Weintraut pointed out that the closer one moves to Harrison, the more obvious the removal of buildings becomes.
- Stop 5 looked northward to the Hillside Inn from Harrison Street (US 421). This view showed the rise of the bridge associated with alternative 4 and the "at grade" with a retaining wall below the Hillside Inn. Balloons illustrated the height of the bridge. The group viewed the Non-contributing buildings that would be removed as well as the gas station that Contributes to the NRHP district.
- Stop 6 was in front of the "Dry Dock" Building and provided a view to the extent of the rise of the bridge since it would begin at the corner of First and Harrison. Weintraut said that intersection should look similar for both alternatives but the bridge would begin rising slightly to the north of the intersection. Balloons illustrated the height of road for

alternative 4 and the height of the top of the bridge as well as the height of the roadway with a truck on it. There will be bump outs at intersections.

- Stop 7 showed the bridge and the roadway realignment with SR 56. It also illustrated how US 421 will appear as one comes from the east on SR 56 and on Second Street.
- Stop 8 overlooked the project area from the Hillside Inn. The group saw the properties to be acquired along Sering Street. The group wondered if there is a way to save the Bungalow at 112 Sering Street. The group also inquired about the "ruins" in the Hillside and how much of these ruins would be removed. Burns told the group that Alternative 8 would move the road about eight feet farther away from the properties at 102 and 104 Sering Street. An 1866 photograph showed approximately the same view as a comparison between past, present, and future views. At Stop 8, Burns and a few of the consulting parties diverged to look at the Bungalow on Sering. Camille Fife asked that the house be saved; Burns explained the challenges, especially with the construction of a retaining wall in proximity.
- Stop 9 was at the northeast corner of Baltimore and Main, looked back to the Hillside and provided closure to the tour.

Following the walking tour, the group re-convened at the City Building for lunch. As participants concluded lunch, Weintraut provided an overview of Section 106 and Section 110 of the National Historic Preservation Act (NHPA) efforts to date.

Section 106 of the NHPA requires federal agencies to take into account the effects of their undertakings on historic properties when those properties use federal funds or issue a federal permit. It is a four step process: **Step 1 is to Initiate Consultation.** Consultation was initiated in October 2015 when the invitation to join consultation was extended to consulting parties and when the SHPO and Tribal Historic Preservation Officers (THPOs) were identified. **Step 2 is to Identify & Evaluate Historic Properties.** The Historic Property Report identified two historic properties: the National Register of Historic Places (NRHP) and National Historic Landmark (NHL) districts. **Step 3 is to Assess Effects.** The Effects Memorandum was published on June 20, 2016 and FHWA will issue a finding of effect with its 800.11(e) documentation. **Step 4 is to Mitigate Adverse Effects.** FHWA is recognizing an adverse effect, so we will be looking at ways to do general and specific mitigation under alternatives 6 and 4.

Section 110 of the NHPA requires that prior to the approval of any federal undertaking which may directly and adversely affect any NHL, the head of the responsible Federal agency shall, to the maximum extent possible, undertake such planning and actions as may be necessary to minimize harm to such landmark, and shall afford the ACHP a reasonable opportunity to comment on the undertaking. Weintraut asked Curran if she wished to add anything about Section 110; Curran said that Section 110 has brought the National Park Service, the Advisory Council on Historic Preservation, and the National Trust into the discussion.

Weintraut said that because we are taking a Contributing resource, it triggers another law, Section 4(f). Devin Stettler provided an overview of Section 4(f). Section 4(f) comes from the US Department of Transportation Act of 1966, which states that USDOT-funded projects are prohibited from using land from certain properties unless there is no feasible and prudent alternative to the use of the Section 4(f) resource. The proposed action must also include planning to minimize harm to the property that would result from such use. The purpose of Section 4(f) is to protect historic sites and publicly owned park and recreation lands and wildlife and waterfowl refuges. A Section 4(f) property is "any publicly owned land from a public park, recreation area, of wildlife and waterfowl refuge of national, state, or local significance as determined by the federal, state, or local officials having jurisdiction thereof, or any land from an historic site of national, state, or local significance as so determined by such officials ." A use can be "direct" (converting land to a transportation use) or "indirect" (could affect the property in other ways besides acquisition. INDOT needs to demonstrate that there are no other feasible and prudent alternatives if a project has a use. The next step is to look at ways to minimize harm to 4(f) resources and mitigating those remaining effects that cannot be minimized. The preferred alternative should do the least overall harm. SHPO has jurisdiction. Department of the Interior will also review 4f document. Stettler said that officials with jurisdiction would offer an opinion on the alternative that has the "least harm."

Betsy Merritt of the National Trust asked if any resources would be subject to "constructive use." Allen noted that constructive use has a very high bar. FHWA decides if there is constructive use: the impact would have to be so great that it would destroy the significance of the resource.

Naber added the ACHP is an official with jurisdiction as is NPS. The Department of the Interior will review the 4(f). Patrick Carpenter, INDOT Cultural Resource Office (CRO) noted that Section 106 is procedural but 4(f) is substantive. Naber explained the FHWA is often sued over 4(f) but not Section 106.

Weintraut provided an update on the archaeological study. Phase Ia testing has been completed. In general, one prehistoric artifact was identified but it was not in situ. Archaeologists have also identified archaeological sites from the historic era; artifact analysis is taking place. A report will be produced soon; the report will be sent to the agencies and the tribes but not distributed to consulting parties since archaeological sites are confidential, per Indiana law.

Weintraut began a discussion of the Effects Memorandum; she reminded the consulting parties that per the NRHP standards, a district is more than just a collection of buildings but "possesses a significant concentration, linkage, or continuity of sites, buildings, structures, or objects united historically or aesthetically by plan or physical development." In other words, a district is more than just a collection of individual resources. Alternative 4 would acquire 1.64 acres of permanent and temporary right of way (ROW) from the NRHP and 1.32 acres of permanent and temporary ROW from the NHL. Four contributing properties would be acquired from the NRHP

and two from the NHL. There would also be a partial acquisition of three contributing properties from the NRHP and two from the NHL.

Alternative 4 would call for the installation of a bridge measuring 90 feet by 32 feet and 23 feet tall with 14.5 foot vertical clearance. It would alter the character of the easternmost section of the NRHP district, around the old brewery where the working class homes and the community of Fulton were located. Pedestrian access between the working class/Fulton neighborhood and the old plat of Madison would be maintained. The bridge would constitute a visual barrier that would bifurcate the NRHP and the NHL. The "concentration, linkage, or continuity of sites, buildings, structures, or objects united historically or aesthetically by plan or physical development" between the easternmost section and the rest of the NRHP and the NHL will be diminished. This alternative would have an impact on the design of the historic street plan and would likely result in increased noise levels in the vicinity of the proposed grade separated structure due to the accelerating and braking truck traffic on the approaches to and departures from the structure but would likely reduce the total number of residences exposed to truck traffic. **Alternative 4 would result in an Adverse Effect to the NHL and NRHP**.

Naber asked for information beyond the bridge information to know what the rise dimensions would be. Burns said that the rise to the bridge would begin just north of 1st Street and reach full height over 2nd Street.

Bernard Keller asked about adding limestone to the bridge. Burns said it was a possibility but we are not at a stage where materials are being discussed.

Alternative 6 would acquire 1.38 acres of permanent and temporary ROW from the NRHP and 1.30 acres of permanent and temporary ROW from the NHL. This alternative would acquire five contributing properties from the NRHP and two contributing properties from the NHL. The alternative would make partial acquisitions of three properties in the NRHP and two from the NHL. Alternative 6 would cause physical destruction to a part of the property and introduce new features, a roadway, and a wall. The "concentration, linkage, or continuity of sites, buildings, structures, or objects united historically or aesthetically by plan or physical development" between the easternmost section and the rest of the NRHP and the NHL will be diminished. This alternative would have an impact on the design of the historic street plan and increased noise levels in the vicinity of the proposed grade separated structure due to the accelerating and braking truck traffic on the approaches to and departures from the structure but would likely reduce the total number of residences exposed to truck traffic. Pedestrian access between the working class/Fulton neighborhood and the old plat of Madison will be diminished. **Alternative 6 would result in an Adverse Effect to the NHL and NRHP**.

Curran stated she does not like mitigation discussions before we know what the preferred alternative is. Weintraut asked participants to think in a broader context for this meeting with respect to mitigation. She asked for a general discussion of potential mitigation measures for any alternative chosen.

Naber suggested the group think about mitigation as ways to help minimize and not as final approved mitigative measures.

Curran asked if the limestone walls would be the same for alternatives 4 and 6. Burns answered under alternative 6 they would be 350 feet long and 10 feet tall. Under alternative 4 they would be 8 to 10 feet tall and about 210 feet long.

Elkin asked if there is a specific date that the preferred alternative would be chosen. Allen explained FHWA will need to make the effects determination, followed by the Memorandum of Agreement (MOA), and then the 4(f) review will take place. At the end of NEPA, FHWA writes a Finding of No Significant Impact (FONSI) as the final decision date and then purchases right of way. FHWA makes the final determination on the preferred alternative.

Maggie Balough Hillery asked about the drainage; Madison has a problem with drainage, especially with water flowing down the hill above town. Adam said INDOT will be making improvements to drainage within the project limits but improvements associated with this project will not occur outside the project limits. Typically, the engineers will have a general understanding of drainage by the time they produce design plans at the thirty percent completion stage. Those plans would be public and would be shown at the next public meeting.

Merritt asked about the noise increases at fourteen homes under alternative 4. Noise increases would be 1-2 and 2-5 dBA increases. Naber explained that human perception of noise is in the range of 1-3 dBA. Therefore, she said, even if noise levels do not rise to the level of needing a noise wall, there may still be an adverse effect. Overall noise in the project area will decrease under both alternatives. Merritt asked for additional information when the noise analysis was available.

For the purposes of clarification, Young noted that the Fulton community began at the corporation limit lines of Madison.

Ludington asked if there is a difference between the noise traffic makes over a bridge versus noise made on the ground. Burns noted noise is louder with a bridge.

Weintraut explained that for the next 30 to 35 minutes, there would be small group discussion and she asked everyone to discuss broadly the kinds of mitigation that would be appropriate whether the preferred alternative is 4 or 6. Then at the end of the discussion, she asked the groups to spend some time talking about what specific things might be done for alternatives 4 and 6. She asked them to think in four general categories: Avoidance and Minimization, Preservation and Enhancement, Education and Interpretation, and Other.

John Carr, Division of Historic Preservation and Archaeology (SHPA) asked if the bridge over the Ohio River Bridge will be closed at any point. Burns said that for the purposes of this meeting, assume that one lane will be closed but people will be able to use the bridge.

Young inquired about circumstances that might bring back alternative 8. Burns explained since most public comments have been supportive of alternatives 4 and 6, it would take very significant involvement by someone who has not yet been involved. Alternatives 4 and 6 appear the most reasonable and prudent. If alternative 8 comes back, this group will be re-engaged to discuss the process.

The four groups reconvened with mitigation suggestions. (See the attached for each group's suggestions.)

Stacier added that artists should be involved in the landscape architecture for the retaining wall and the gateway.

Weintraut noted that some themes are emerging and she said that the discussion had produced some great ideas. There will be a budget but it is not yet known what it will be. Not everything can be done because there will not be unlimited funds. Allen said that mitigation should be commensurate with the kind of adverse effect. Are some things more important than others?

Curran noted alternate construction techniques that limit impacts. The request for proposals needs to clearly identify that this is an NHL. Allen noted that a lot of the stipulations in a MOA will turn into specific tasks a contractor will have to do.

Adler added that it is important to include accountability, monitoring, and enforcement. Naber said the MOA for the Ohio River Bridges Project would be instructive for this project. Staging and stockpiling of materials during construction can often be an effect that should be considered for the MOA.

The group identified emergent themes that came out of the smaller discussions:

- Landscaping (and removal of billboards—billboards might be local) Landscaping should account for engineering, drainage, and artistry. Landscaping as gateway. Some called for terracing of retaining walls.
- Signalized intersection (on-demand) for pedestrian and bicycle traffic across Harrison/US 421;
- Advisory Team that includes a mix of representatives including artists, and could include some consulting parties. Generally the MOA stipulates MOA participants. Curran said that the NPS is an automatic reviewer of design plans. Allen noted we only get to about 30 percent design under NEPA, so it is a good idea to touch base during the design process
- Avoidance or treatment of the red house on Sering Street

- Pedestrian and bicycle access

Rick Grote, the owner of the red brick Bungalow at 112 Sering, noted that it is a two-story duplex. It generates income for him, but if a wall is constructed and the kitchen and bathrooms and parking are removed for the tenants, occupancy becomes less viable. Foundations are 2.0-2.5-foot thick early cement. He believes that it would be difficult to pick up the house and move it. For red Bungalow, access to house would be from the alley. The downstairs parking is on alley. Upper parking area would be eliminated. Grote noted that if the value of the house will be diminished, he would prefer to have the property acquired.

Discussion then turned to next steps. Naber asked for an attendee list. Weintraut said that a meeting summary with attendees will be distributed to all consulting parties. The renderings will be made available after the public meeting; Weintraut asked the consulting parties to turn in their rendering since that material was for discussion only and not available to the general public at this time. The 800.11(e) documentation will be distributed once the preferred alternative is decided. The project team will start drafting an MOA based on these discussions and circulate as soon as possible to get feedback. An Archaeology Report will be distributed to the appropriate parties in next few weeks. The end of the comment period for the effects report is August 22, 2016. A public meeting will take place next Thursday, August 18th, at the Jefferson County Public Library.

Allen noted this may be the last consulting party meeting before the advisory team is assembled. She thanked everyone for their participation.

Prior to concluding, the consulting parties requested a straw poll to communicate which alternative consulting parties favored. The overwhelming majority favored Alternative 6. The meeting adjourned at 3:01 pm.

This summary reflects the result of informal consultation between the agencies, project team members, and consulting parties at the time of the meeting. Accordingly, the information contained in this summary is considered to be pre-decisional and deliberative.

08/15/2016 02:19

PRES/ENH

Local Shop

Local Resid.

ADVISORY TEAM

CONTEXT SENS. DESIGN

Local Mtl in Const.

ATTRACTIVE LANDSCAPE

PLANT BUFFER

VEGETATION

LIGHTING

MAKE BOTH SIDES ATTRACTIVE AS GATEWAY

MIN/AVOID

AVOID RED BLDG + RELOC. & ASSOC. FEATURE

08/15/2016 02:20

PRES/ENH

ENHANCE GATEWAY THM PROPERTY ACQ

GATEWAY FEATURE

TERR. WALL

STOCK PILE LOCAL MAT'L 4 SABLE

REPAIR & RESTORE EXIST. WALL

SEINS. TREATMENT OF EXIST. FEATURE

SUSTAIN MAT'LS TO RESIST WEAR

DOC ACQ EDUCATIONAL/INTER. SIGNAGE

MAINT. ORG. FOR FEAT.

AVOID/MIN.

INTRO. TRAF CALMING

TRAF SIGNALS ACCN CONTROL

MAIN. WALKABILITY

MAINS ST. CONTIG TO CREATE SEP.

FUNDS TO ACQ & PRESERVE OTHERS ENDANGERED

roup 1 Sheet 2 o 2.JPG

GENERAL MITIGATION

- Green Space, Landscaping - 3D between River Bridge & 2nd St. Both Sides
- Decorative Retaining Wall
- Maintain Parking on 2nd St.
- Markers for Historic Site/areas
- Move little Red House. 112 Sering
  - Visitor Center? at closed gas station @ 1st St.

- Alt 6
  - Stop Light
    - with ped signal

- Alt 4
  - no riprap abutment

08/15/2016 02:23

roup 2 Sheet 1 o 1.JP

08/15/2016 02:21

Effect:

- Drainage?
- Infra

- Materials (As you enter i walk)
  - Landscaping - sound barrier
  - Infra-structure
  - Traffic light / crosswalk
  - Appropriate lighting
    - Levels & fixtures
    - Bike & ped friendly (proactivated on demand traffic crossing light)
- Acquisition of properties along Harrison - both sides

Adjacent parking areas

Sides Entrance Mark

roup 3 Sheet 1 o 3.JP

08/15/2016 02:21

Acknowledge businesses as part of community

- Restoration of house next to drainage & liquor store (811-E. 2nd)
- Bungalow: saved or moved
- Artistic creative solution for retaining wall (Alt. 6)
- Help fund PACE fund
- Neighborhood enhancement fund for APE
- Minimization for Alt 6: don't dead end SR 86 serving

- Welcome Center/Visitor Center Kiosk)

- No Cul de Sac (Ath Alley) (use hammer-head).

08/15/2016 02:22

roup 3 Sheet 3 of 3 JPG

General Mitigation Items

- vibration provision – document before, monitor, repair, document
- Stone walls or veneer
- landscaping – noise offset, ↑ aesthetic
- MOT - during constr. - Truck consideration
- Constr. working hours
- Notices of Constr. for neighborhood
- Noise – mitigation for property & during constr.
- gateway treatment – into IN or into Hist. Dist.
- Features to remain – UIP, DND, Commitment
- Alignment of curve → avoid both N & S hist. structures but meet curve standards
- Access mgmt. requirements – access for properties
- Street lighting
- x. walks
- 1 lane Constr. closure causes loss of access to properties
- Advisory Team for options/design decisions
- Emerg. service considerations
- River Bridge walkway to 2nd Street
- Bicycle considerations

- blasting considerations jackhammering
- Stormwater analysis of exist. drain/prop. drain. in entire area
- Resid. parking loss/count
- Parking for public to walk across bridge/trailhead/historical interpretation area

08/15/2016 02:22

Alt. 6 · At Grade

· Signal -

· X-walks E & W specifically Harrison @ 2nd

Alt. 4 · Bridge

· appearance of sides of bridge structure

· type (span of bridge) bridge aesthetics

· wall aesthetics

08/15/2016 02:23

roup 4 Sheet 2 o 2.JPG

Appendix E: Photographs

1st St_Baltimore St_Looking W.JPG

1st St_Clay St_Looking NW.JPG

1st St_Clay St_Looking SW.JPG

1st St_Clay St_Looking W.JPG

1st St_Harrison St_Looking N along Harrison.JPG

1st St_Harrison St_Looking S along Harrison.JPG

1st St_Harrison St_Looking SW.JPG

1st St_623 E 1st St.JPG

1st St_707 E 1st St.JPG

1st St_708 E 1st St.JPG

1st St_709, 711 E 1st St.JPG

1st St_710 E 1st St.JPG

1st St_712 E 1st St.JPG

1st St_713 E 1st St.JPG

1st St_714 E 1st St.JPG

1st St_715 E 1st St.JPG

1st St_717 E 1st St.JPG

1st St_723 E 1st St.JPG

1st St_724 E 1st St.JPG

1st St_801 E 1st St.JPG

1st St_803 E 1st St.JPG

1st St_804 E 1st St.JPG

1st St_805, 811 E 1st St.JPG

1st St_805, 811 E 1st St (2).JPG

1st St_808, 806 E 1st St.JPG

1st St_815, 819 E 1st St.JPG

1st St_816-814 E 1st St.JPG

1st St_820-818 E 1st St.JPG

1st St_902 E First St_N and W elevation.JPG

1st St_903 E First St_W and S elevation.JPG

1st St_904 E 1st St_N elevation.JPG

1st St_904 E First St_N elevation 2.JPG

1st St_906 E 1st St_N elevation.JPG

1st St_Looking NW to drainage.JPG

1st St_Looking NW to drainage 2.JPG

2nd St_Baltimore St_Looking E.JPG

2nd St_Baltimore St_Looking N.JPG

2nd St_Baltimore St_Looking NE.JPG

2nd St_Baltimore St_Looking NW.JPG

2nd St_Baltimore St_Looking SE.JPG

2nd St_Baltimore St_Looking SW.JPG

2nd St_Harrison St_Looking NE to 901 E Second St.JPG

2nd St_Harrison St_Looking NW.JPG

2nd St_Harrison St_Looking NW (2).JPG

2nd St_Harrison St_Looking SE to 904 E Second St.JPG

2nd St_Harrison_Looking S.JPG

2nd St_518 E 2nd St.JPG

2nd St_518 E 2nd St (2).JPG

2nd St_623 E 2nd St.JPG

2nd St_623 E 2nd St (facade).JPG

2nd St_623 E 2nd St_Window on E elevation.JPG

2nd St_624 E 2nd St.JPG

2nd St_701-705 (Common Wall).JPG

2nd St_706 E 2nd St.JPG

2nd St_707 E 2nd St (R).JPG

2nd St_711 E 2nd St.JPG

2nd St_712, 708 E 2nd St.JPG

2nd St_713-715 E 2nd St.JPG

2nd St_714 E 2nd St.JPG

2nd St_716 E 2nd St.JPG

2nd St_717 and 719 E 2nd St.JPG

2nd St_718 E 2nd St.JPG

2nd St_723 and 801 E 2nd St.JPG

2nd St_790 E 2nd St.JPG

2nd St_803, 805, 807 E 2nd St.JPG

2nd St_804, 802 E 2nd St.JPG

2nd St_808 E 2nd St (Concrete Curb Lawn).JPG

2nd St_809 and 811 E 2nd St.JPG

2nd St_810 E 2nd St.JPG

2nd St_901 E 2nd St.JPG

2nd St_904 E 2nd St.JPG

2nd St_906 E 2nd St.JPG

2nd St_910 E 2nd St.JPG

2nd St_918 E 2nd St.JPG

2nd St_920 E 2nd.JPG

2nd St_924 E 2nd.JPG

2nd St_Culvert at E 2nd St facing N.jpg

2nd St_Culvert at E 2nd St facing N_2.jpg

2nd St_Culvert at E 2nd St facing NE.jpg

2nd St_Culvert at E 2nd St facing S.jpg

2nd St_Culvert Looking S.JPG

2nd St_Looking NE to 603-613 E 2nd St.JPG

2nd St_Looking NE to 603-613 E 2nd St (2).JPG

2nd St_Looking SE to 602-620 E 2nd St.JPG

2nd St_Looking SE to 602-620 E 2nd St (2).JPG

2nd St_Looking to 118 E Sering and stone wall.JPG

3rd St_509 E 3rd St_Chruch and Rectory W and S elevation.JPG

3rd St_509 E 3rd St_Rectory S elevation.JPG

Baltimore St_209, 211 Baltimore and garage on 623 E 2nd.JPG

Baltimore St_210 Baltimore St.JPG

Baltimore St_212 Baltimore St.JPG

Baltimore St_214 Baltimore St.JPG

Baltimore St_Garage associated 623 E 2nd Street.JPG

Baltimore St_Looking N from N of Main St.JPG

Baltimore St_Looking S to Main St.JPG

Baltimore_312 Baltimore.JPG

E 1st St_617 E 1st Street.JPG

E 3rd St_509 E 3rd St_St Michaels facade.JPG

E 3rd St_523 E 3rd St_W and S elevation.JPG

Ferry St ,Vaughn Dr_Looking N to intersection.JPG

Ferry St ,Vaughn Dr_Looking SE to intersection.JPG

Ferry St_118 Ferry Street_Looking NW to facade.JPG

Ferry St_208 Ferry Street_W elevation.JPG

Ferry St_Culvert at E 1st Street (W side).JPG

Ferry St_Looking SE from 208 Ferry Street.JPG

Ferry St_Looking SW from 208 Ferry Street.JPG

Ferry St_Looking SW from 208 Ferry Street (2).JPG

Ferry St_Open Culvert at E 1st Street (NE side).JPG

Ferry St_Open Culvert at E 1st Street (W side).JPG

Fillmore and Clay_Looking SE tp 801.JPG

Fillmore and Harrison_Looking SE.JPG

Fillmore St ,Clay St_Looking SE.JPG

Fillmore St ,Clay St_Looking SW.JPG

First St_902 E First St_N and W elevation.JPG

First St_903 E First St_W and S elevation.JPG

First St_904 E First St_N elevation.JPG

First St_906 E First St_N elevation.JPG

Harrison St_Looking SW to 902 E 2nd and 210 Harrison.JPG

Main St , Roosevelt St_Looking NW along Main.JPG

Main St ,Baltimore St_Looking N.JPG

Main St ,Baltimore St_Looking S.JPG

Main St ,Baltimore St_Looking S to street details.JPG

Main St ,Baltimore St_Looking SE along Main St.JPG

Main St ,Baltimore St_Looking SSW.JPG

Main St ,Roosevelt St_Looking W.JPG

Main St ,St Michaels Ave_Looking NE.JPG

Main St ,St Michaels Ave_Looking NW.JPG

Main St ,St Michaels Ave_Looking NW (2).JPG

Main St ,St Michaels Ave_Looking NW (3).JPG

Main St ,St Michaels Ave_Looking SE.JPG

Main St ,St Michaels Ave_Looking SW.JPG

Main St ,St Michaels Ave_Looking SW (2).JPG

Main St ,St Michaels Ave_Looking to open drain from First Street.JPG

Main St_606 E Main St_W elevation.JPG

Main St_617 E Main St.JPG

Main St_701, 705 E Main St.JPG

Main St_704 E Main St.JPG

Main St_704 E Main St_N and E elevation.JPG

Main St_707 E Main St.JPG

Main St_708 E Main St.JPG

Main St_708 E Main St_N and E elevations.JPG

Main St_709 E Main St.JPG

Main St_710-714 E Main St_N and W elevations.JPG

Main St_710-714, 716 E Main St.JPG

Main St_711-713 E Main St.JPG

Main St_715, 717 E Main St.JPG

Main St_718 E Main St.JPG

Main St_801 E Main St.JPG

Main St_831 E Main.JPG

Main St_831 E Main St_Hillside hotel stairs_N.jpg

Main St_831 E Main St_Stone piers below Hillside Hotel facing E.jpg

Main St_831 E Main St_Stone piers below Hillside Hotel facing SE.jpg

Main St_Brick in alley W of 710 E Main St.JPG

Main St_Historic sewer grate in front of 701-714 E Main St detail.JPG

Main St_Historic sewer grates in front of 701-714 E Main St.JPG

Main St_Looking ENE from Baltimore St.JPG

Main St_Looking S from 831 E Main St to US 421 Bridge.JPG

Main St_Looking S to brick in alley W of 710 E Main St.JPG

Main St_Looking SW from 831 E Main St.JPG

Main St_Looking W from 831 E Main St.JPG

Main St_Looking W from 831 E Main St_Detail.JPG

Main St_Looking W to Baltimore_Main St intersection.JPG

Main St_Looking WNW from E of Baltimore St.JPG

Main_Alley W of 711 E Main St.JPG

Park Ave_Ferry St_Looking NNE.JPG

Park Ave_Ferry St_Looking S.JPG

Park Ave_926 Park Ave.JPG

Park Ave_926 Park Ave 2.JPG

Park Ave_928 Park Ave.JPG

Park Ave_928 Park Ave (2).JPG

Park Ave_928 Park Ave (3).JPG

Park Ave_1001 Park Ave.JPG

Park Ave_1001, 1003 Park Ave.JPG

Park Ave_1004 Park Ave.JPG

Roosevelt St_416 Roosevelt St.JPG

Roosevelt St_Looking N from N of Main.JPG

Sering St_Ferry St_Looking NW from intersection.JPG

Sering St_Ferry St_Looking SE to 1004 Park Ave.JPG

Sering St_Ferry St_Looking SE to intersection and Park Ave.JPG

Sering St_104-102 Sering.JPG

Sering St_104-102 Sering Stone gate posts and wall.JPG

Sering St_112 Sering St.JPG

Sering St_116 Sering St.JPG

Sering St_116-118 Sering St.JPG

Sering St_116-118 Sering St 2.JPG

Sering St_118 Sering St.JPG

Sering St_Culvert drain to street.JPG

Sering St_Looking SE from 116 Sering St.JPG

Sering St_Looking SE to 116 ,118 Sering St.JPG

Sering St_Retaining wall and culvert_N side.JPG

Sering St_Ruins south of 831 E Main St.JPG

Sering St_Ruins south of 831 E Main St (2).JPG

Sering St_Ruins south of 831 E Main St (3).JPG

Sering St_Ruins south of 831 E Main St (4).JPG

St Michaels Ave_108 St Michaels Ave_facade detail.JPG

St Michaels Ave_108 St Michaels Ave_N and W elevation.JPG

St Michaels Ave_108 St Michaels Ave_N and W elevation (2).JPG

St Michaels Ave_108 St Michaels Ave_W elevation.JPG

St Michaels Ave_320 St Michaels Ave_W elevation.JPG

St Michaels Ave_Looking NE from Main St.JPG

St Michaels Ave_Looking NE from Main St (2).JPG

St Michaels Ave_Looking NE to 204-212 St Michaels Ave.JPG

St Michaels Ave_Looking NW from 415 St Michaels Ave.JPG

St Michaels Ave_Looking NW to 201-209 St Michaels Ave.JPG

Michaels Ave_Looking NW to 315-317 St Michaels Ave and 522 E Main St.J

St Michaels Ave_Looking S to drain (E side).JPG

St Michaels Ave_Looking S to drain and culvert (E side).JPG

St Michaels Ave_Looking S to drain and culvert (W side).JPG

St Michaels Ave_Looking S to drain detail (E side).JPG

St Michaels Ave_Looking S to drains (W side).JPG

St Michaels Ave_Looking SE from 424 St Michaels Ave.JPG

St Michaels Ave_Looking SE from 424 St Michaels Ave (2).JPG

St Michaels Ave_Looking SW to 123-113 St Michaels Ave.JPG

St Michaels Ave_Looking SW to 133-125 St Michaels Ave.JPG

St Michaels Ave_Looking SW to 311 ,309 St Michaels Ave.JPG

Vaughn Dr ,Ferry St_Looking SE to intersection.JPG

Vaughn Dr_512 E Vaughn Dr_S and E elevation.JPG

Vaughn Dr_512 E Vaughn Dr_S elevation.JPG

Vaughn Dr_512 E Vaughn Dr_S elevation (2).JPG

Vaughn Dr_613 E Vaughn Dr.JPG

Vaughn Dr_Looking N to 801-820 Fillmore.JPG

Vaughn Dr_Looking NE across park to 716-722 Fillmore.JPG

Vaughn Dr_Looking NE to 108 St Michaels Ave.JPG

Vaughn Dr_Looking NE to 108 St Michaels Ave (2).JPG

Vaughn Dr_Looking NW to 902-906 Fillmore.JPG

Photo 1_901 East Second St.JPG

Photo 2_112 Sering St.JPG

Photo 3_Culvert at Sering St.jpg

Photo 4_Hotel Ruins on Sering St.JPG

Photo 5_116 Sering St.JPG

Photo 6_118 Sering St.JPG

Photo 7_831 E Main St.JPG

Photo 8_904 East Second St.JPG

Photo 9_924 Park Ave.JPG

Photo 10_926 Sering St.JPG

Photo 11_920 East Second St.JPG

Photo 12_1001 Park Ave.JPG

Photo 13_1003 Park Ave.jpg

Photo 14_1009 Park Ave.jpg

Photo 15_Culvert West of Ferry St.JPG

Photo 16_Culvert at East Second St.JPG

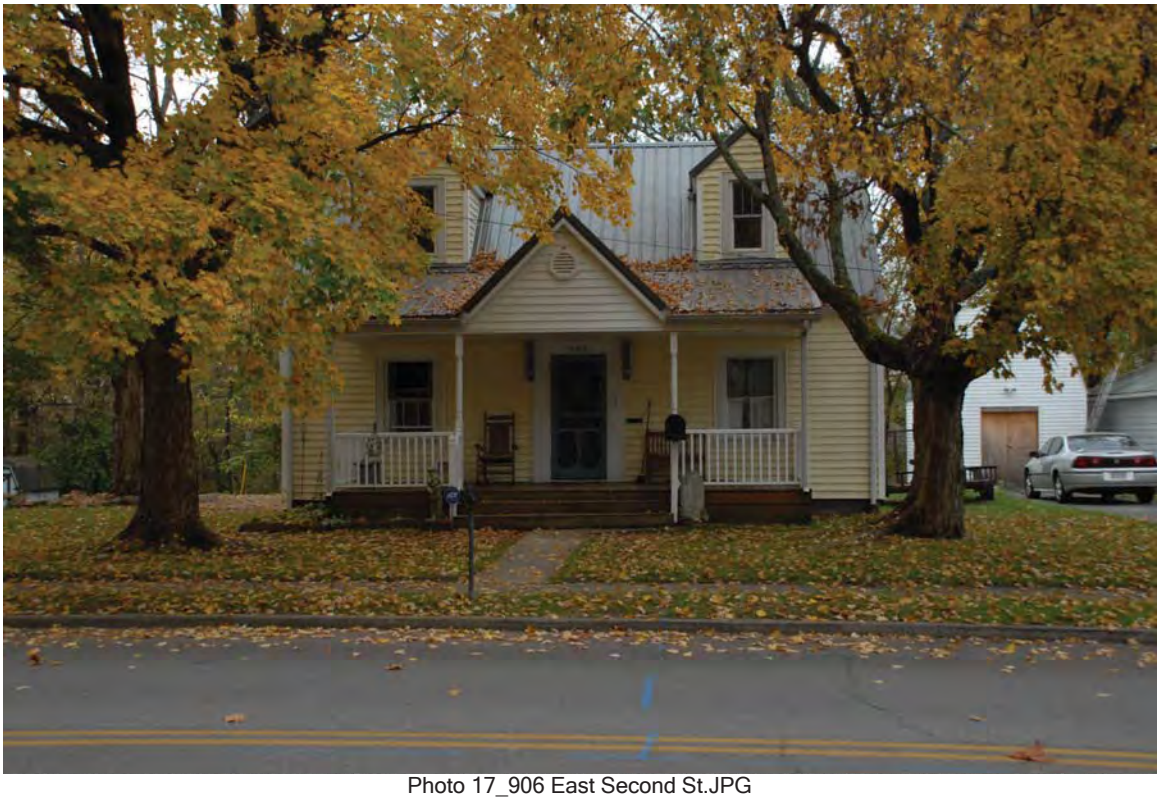

Photo 17_906 East Second St.JPG

Photo 18_910 East Second St.JPG

Photo 19_928 Park Ave.JPG

Photo 20_1004 Park Ave.JPG

Appendix F: Report Summaries

Historic Property Report
US 421 New Road Project
In the City of Madison, Jefferson County, Indiana

INDOT DES. No.: 1400918

DHPA No.: 18317

Prepared for

CMT

Indiana Department of Transportation / Federal Highway Administration

Prepared by

WEINTRAUT & ASSOCIATES, INC.

Principal Investigator: Dr. Linda Weintraut

Author: Bethany Natali, M.A.

P.O. Box 5034 | Zionsville, Indiana 46077 | 317.733.9770 | Linda@weintrautinc.com

January 2016

US 421 New Road Project | In the City of Madison, Jefferson County, Indiana | DES. No.: 1400918 | Executive Summary:

The Indiana Department of Transportation (INDOT) with funding from the Federal Highway Administration (FHWA) proposes corridor improvements for United States (US) 421 at its approach to the Milton-Madison Bridge over the Ohio River. The proposed project is located within Jefferson County in the City of Madison, Indiana. The limits of the preliminary project area begin at the northern approach to the Milton-Madison Bridge and extend to the intersection of US 421/Baltimore Street and US 421/Main Street to the west and through the intersection of State Road (SR) 56/Sering Street to the east.

The Area of Potential Effects (APE) includes properties adjacent or near the limits of the preliminary study area and is bound approximately by St. Michael's Avenue to the west, East Third Street to the north, Ferry Street to the east, and Vaughn Drive to the south.

Project historians who meet or exceed the Secretary of Interior's Professional Standards and who are listed as qualified professionals on the Indiana Department of Natural Resources/Division of Historic Preservation and Archaeology (IDNR-DHPA) identified and evaluated historic properties within the APE for this project in accordance with Section 106 of the National Historic Preservation Act (1966), as amended and the regulations implementing Section 106 (36 C.F.R. Part 800).

The APE is located almost entirely within the Madison National Historic Landmark Historic District (listed in 2006) and is entirely within the Madison National Register Historic District (listed in 1973).

Memo:
To: Indiana Department of Transportation
From: Weintraut & Associates
Date: June 20, 2016

Re: Effects of the US 421 New Road Project (Des. No.: 1400918; DHPA No.: 18317) on Historic Properties

The Indiana Department of Transportation (INDOT), with funding from the Federal Highway Administration (FHWA), proposes corridor improvements for United States (US) 421 at its approach to the Milton-Madison Bridge over the Ohio River. The proposed project is located within Jefferson County in the City of Madison, Indiana. The limits of the preliminary project area begin at the northern approach to the Milton-Madison Bridge and extend to the intersection of US 421/Baltimore Street and US 421/Main Street to the west and through the intersection of State Road (SR) 56/Sering Street to the east.

The project area is located in a dense urban setting with mostly historic-era residential, religious, recreational, municipal, industrial, and educational buildings and facilities. The project area includes two overlapping historic districts: the Madison Historic District and the Madison National Historic Landmark Historic District.

The goal of this memorandum is to assess the effects of the undertaking upon historic resources and with that assessment, provide some clarity as to the relative severity of the impacts of the various alternatives upon the historic districts within the Area of Potential Effects (APE). The APE is the "geographic area or areas within which an undertaking may directly or indirectly cause alterations in the character or use of historic properties, if any such properties exist. The area of potential effects is influenced by the scale and nature of an undertaking and may be different for different kinds of effects caused by the undertaking" (36 CFR § 800.16(d)).

The APE for this project includes properties adjacent or near the limits of the preliminary study area. The preliminary study area encompassed the footprint of the alternatives carried forward that meet purpose and need. The APE is bound approximately by St. Michael's Avenue to the west, East Third Street to the north, Ferry Street to the east, and Vaughn Drive to the south. (See APE Appendix 1: Maps.)

As effects are assessed, it is important to keep in mind the National Park Service (NPS)'s definition of a district: "a district possesses a significant concentration, linkage, or continuity of sites, buildings, structures, or objects united historically or aesthetically by plan or physical development."[1] In other words, a district is more than just a collection of individual resources.

36 CFR § 800.5(a)(1) states: "An adverse effect is found when an undertaking may alter, directly or indirectly, any of the characteristics of a historic property that qualify the property for inclusion in the National Register in a manner that would diminish the integrity of the property's location, design, setting, materials, workmanship, feeling, or association. Consideration shall be

[1] Patrick W. Andrus, "How to Apply the National Register Criteria for Evaluation," *National Register Bulletin* (Washington, D.C.: National Park Service, 1990), 5.

Per 36 CFR 800.5(a)(2)(iv), there will be a change "of the character of the property's use or of physical features within the property's setting" since the introduction of the new US 421 roadway and roundabout within a residential area will constitute a change to the NHL's physical features. While the introduction of the roadway and roundabout will impact the easternmost section of the NHL, around the old brewery, this alternative has been designed to avoid acquisition of the old brewery buildings.

The introduction of the curvilinear roadway and roundabout and the retaining walls will diminish the integrity of the "concentration, linkage, or continuity of sites, buildings, structures, or objects united historically or aesthetically by plan or physical development" in that portion of the NHL NHL. However, the historians believe that immense size of the NHL means that it will still remain eligible as a whole.

Per the comparative and qualitative analysis of potential noise impacts, Alternative 8 incorporates a roundabout intersection in close proximity to other residential, commercial and multi-family structures within portions of the NHL along Park Avenue and Ferry Street that would be newly exposed to higher vehicular noise levels when compared to all of the other alternatives. The residence along Main Street would be exposed to higher noise levels when compared to the No-Build Alternative. Per 36 CFR 800.5(a)(2)(v), there will be an "introduction of visual, atmospheric or audible elements that diminish the integrity of the property's significant historic features."

Vibration from construction constitutes another threat to the historic fabric of the nineteenth century buildings. Vibration monitoring could be part of the stipulations of the MOA. Additionally, construction plans could be required of the contractor prior to the beginning of any work activities that require blasting or result in vibration. These construction plans could be developed with input from a consulting party advisory committee and address special provisions, the timing of specific construction activities and the identification of "no-work zones."

Conclusion

In accordance with Section 106 of the National Historic Preservation Act of 1966, as amended (16 U.S.C. 470f), the project historians examined Alternatives 1, 4, 6, and 8 for the US 421 New Road Project and assessed the potential of each alternative to adversely affect historic properties in the APE.

This memorandum has considered potential impacts by each alternative on the Madison NRHP and NHLs. The analysis assessed if an alternative would likely cause an effect to a historic property, and if that effect would be adverse per 36 CFR 800.5.

It is the professional opinion of the historians that the following findings would be appropriate for this undertaking, as presented in each alternative:

Alternative 1 – No Effect to NRHP and NHL
Alternative 4 – Adverse Effect to NRHP and NHL
Alternative 6 – Adverse Effect to NRHP and NHL
Alternative 8 – Adverse Effect to NRHP and NHL

Phase Ia Archaeological Records Check and Field Reconnaissance:
Proposed US 421 New Road Construction from the approach of the Madison Milton Bridge to SR 56 in the City of Madison, Jefferson County, Indiana
Des. No.: 1400918

Prepared for

Federal Highway Administration/
Indiana Department of Transportation

Prepared by

WEINTRAUT & ASSOCIATES, INC.

Principal Investigator: Jason Goldbach, M.A.
Jason Goldbach, M.A., and Craig R. Arnold, M.A.
P.O. Box 5034 | Zionsville, Indiana | (317) 733-9770 | (Linda@weintrautinc.com)

October 2016

Management Summary

In response to a request by Crawford Murphy & Tilly, Weintraut & Associates, Inc. conducted an archaeological records check and Phase Ia field reconnaissance for the proposed US 421 New Road Project located in the City of Madison, Madison Township, Jefferson County, Indiana (Des No.: 1400918). The Indiana Department of Transportation (INDOT), with funding from the Federal Highway Administration (FHWA), is evaluating proposed realignments of United States Highway 421 (US 421) north of the Milton Madison Bridge to State Road (SR) 56 which has prompted this Phase Ia archaeological investigation to be undertaken to meet requirements of Section 106 and Section 110 of the National Historic Preservation Act (1966), as amended, and 36 CFR Part 800 (2011). The Area of Potential Effects (APE) for this study is defined as the new temporary and permanent right-of-way (ROW), but also includes the entirety of any property parcel located partially within the ROW. A total of approximately 2.21 hectares (ha) (5.46 acres [ac]) was surveyed for this project.

An archaeological records check within the Indiana State Historic Architectural and Archaeological Research Database (SHAARD) of the Indiana Department of Natural Resources, Division of Historic Preservation and Archaeology (IDNR-DHPA) was conducted on October 13, 2015. The results of this search indicate that no part of the current project area had been previously surveyed by professional archaeologists and that no previously recorded archaeological sites are located within the APE. No historic cemeteries are recorded within, or within 30.5 meters (m) (100 feet [ft]), of the APE. However, the APE is located within the Madison NRHP District and the Madison, Indiana, NHL District (National Park Service 2015).

During the Phase Ia archaeological field reconnaissance of the project area, thirteen previously undocumented historic archaeological sites were recorded (12JE0549 through 12JE0561), all of which are within the Madison NRHP and the Madison, Indiana, NHL District. Eight of the sites (12JE0550, 12JE0554 and 12JE0556 through 12JE0561) are recommended for no further work due to low artifact densities, lack of depositional context, and poor state of preservation. These sites do not appear to meet eligibility requirements for listing in the Indiana Register of Historic Sites and Structures (IRHSS), or the National Register of Historic Places (NRHP), and no further work is recommended prior to the commencement of construction.

Five of these sites are recommended for some form of further work. These recommendations were based on the presence

of possible archaeological deposits or features recommended for intensive testing in order to determine integrity; or above-ground historic walls, culverts, stairs or other structural elements recommended for archival research and photo-documentation based on their potential to yield information valuable to better understanding the history of the City of Madison in the contexts of the NRHP and NHL districts. Portions of the project area were not able to be tested due to obstructions such as pavement or structures. For these areas, INDOT recommends that in lieu of monitoring, that if any historic features, such as wells, cisterns, middens, or privies, are uncovered at these sites/addresses, work will cease in the immediate area until INDOT-CRO is notified and clearance has been granted (per INDOT standard specification 107.10 and INDOT Construction Memo 13-14).

Site 12JE0551 is recommended for Phase Ib intensive survey. Site 12JE0553 is recommended for Phase Ib intensive survey as well as archival research and photo documentation. Sites 12JE0552, 12JE0549, 12CL0555, and 12JE0561 are recommended for archival research and photo documentation. It is recommended that Level III documentation of the Historic American Landscape Survey (HALS) or Historic American Engineering Survey (HAER) be provided for sites that contain historic retaining walls, steps, columns/ piers, and culverts.

The Madison Courier

PUBLISHER'S AFFIDAVIT

State of Indiana

{

Jefferson County

United Consulting
1625 North Post Road
Indianapolis, IN 46219

INDOT- US 421 Project Madison

PUBLIC NOTICE
DES. No. 1400918

The Federal Highway Administration (FHWA) and Indiana Department of Transpiration (INDOT) are planning to undertake a roadway improvement project, funded in part by the FHWA. The project is located within Jefferson County, Indiana in the City of Madison and located through a portion of the National Historic Landmark District (NHL) and the National Register of Historic Places (NRHP) - Madison Historic District. The project is located in Section 2, Township 3 North, Range 10 East in Madison Township, Jefferson County.

Under the preferred alternative, US 421 will remain on the existing north-south Harrison Street alignment with a widened intersection and turn radii. North of the Second Street intersection US 421 will follow a new alignment on horizontal curve to the north and west tying into Main Street at Roosevelt Street. US 421 will move north-south without a stop, via a new terrain roadway beginning at the north side of Second Street and tying into Main/Sering Street. Second Street (east-west) will contain a stop. A traffic signal will be constructed at the intersection of US 421 and Second Street. A 15 to 20 foot grade change between Second Street and Sering/US 421 will require a retaining wall. Existing SR-56 will become an access road between US 421 and Second Street.

The project will require the acquisition of 2.0 acres of additional permanent right-of-way and 0.22 acres of temporary right-of-way. The project will result in six property relocations.

Properties listed in or eligible for the National Register of Historic Places (NRHP) located within the Area of Potential Effects (APE) include portions of the Madison NHL District and Madison NRHP Historic District. The proposed action impacts properties listed in or eligible for the NRHP. The FHWA has issued an "Adverse Effect" finding for the project because the project will diminish the integrity of the characteristics that qualify portions of the Madison NHL District and Madison NRHP Historic District for inclusion in the NRHP. In accordance with the National Historic Preservation Act, the views of the public are being sought regarding the effect of the proposed project on the historic elements as per 36 CFR 800.2(d), 800.3(e) and 800.6(a)(4). Pursuant to 36 CFR 800.4(d)(2), the documentation specified in 36 CFR 800.11(e) is available for inspection at United Consulting. Additionally, this documentation can be viewed electronically by accessing INDOT's Section 106 document posting website IN SCOPE at HYPERLINK "http://erms.indot.in.gov/Section106Documents/" http://erms.indot.in.gov/Section106Documents. This documentation serves as the basis for the "Adverse Effect" finding. The views of the public on this effect finding are being sought. Please reply with any comments to United Consulting, 1625 North Post Road, Indianapolis, Indiana 46219, Phone 317 895-2585, Fax 317 895-2596, and email mikeo@ucindy.com no later than August 3, 2017.

In accordance with the "Americans with Disabilities Act", if you have a disability for which INDOT needs to provide accessibility to the document(s) such as interpreters or readers, please contact Rickie Clark at 317-232-6601 or HYPERLINK "mailto:rclark@indot.in.gov" rclark@indot.in.gov.

C7/1 hspaxlp

Personally appeared before me, a notary public in and for said county and state, the undersigned Curt M. Jacobs, who, being duly sworn, says that he is Publisher of the The Madison Courier, newspaper of general circulation, printed and published in the English language in the (city)(town) of Madison, Indiana, in state and county aforesaid, and that the printed matter attached hereto is a true copy, which was duly published in said paper for 1 time(s), the date(s) of publication being as follows:

July 1st, 2017

The undersigned further states that the The Madison Courier newspaper maintains an Internet website, which is located at www.madisoncourier.com website and that a copy of the above referenced printed matter was posted on such website on the date(s) of publication set fourth above.

Curt M. Jacobs

Curt M. Jacobs

vorn to before me this 1st day of July, 2017.

Julie Townsend

Notary Public: Julie Townsend

pires 06/09/2018

E THIS PROOF AND FILE WITH FINAL REPORT

DNR Indiana Department of Natural Resources

Eric Holcomb, Governor
Cameron F. Clark, Director

Division of Historic Preservation & Archaeology · 402 W. Washington Street, W274 · Indianapolis, IN 46204-2739
Phone 317-232-1646 · Fax 317-232-0693 · dhpa@dnr.IN.gov · www.IN.gov/dnr/historic

March 15, 2017

Mayela Sosa
Division Administrator
Federal Highway Administration, Indiana Division
575 North Pennsylvania Street, Room 254
Indianapolis, Indiana 46204

Federal Agency: Indiana Department of Transportation ("INDOT"),
on behalf of Federal Highway Administration ("FHWA")

Re: FHWA's finding, with supporting documentation, of "Adverse Effect," for the US 421 New Road Construction Project in the City of Madison, Jefferson County, Indiana; and notice for March 9, 2017, consulting parties conference call (Des. No. 1400918), (DHPA No. 18317)

Dear Ms. Sosa:

Pursuant to Section 106 of the National Historic Preservation Act of 1966, as amended (54 U.S.C. § 306108), 36 C.F.R. Part 800, and the "Programmatic Agreement (PA) Among the Federal Highway Administration, the Indiana Department of Transportation, the Advisory Council on Historic Preservation and the Indiana State Historic Preservation Officer Regarding the Implementation of the Federal Aid Highway Program In the State of Indiana," the staff of the Indiana State Historic Preservation Officer ("Indiana SHPO") has reviewed the February 14, 2017, cover letter, with enclosures, from INDOT, which we received in paper form the same day.

We concur with FHWA's February 14, 2017, Section 106 finding of "Historic Properties Affected: Adverse Effect" for the US 421 New Road Construction Project, as a whole.

For the purposes of Section 4(f) of the US Department of Transportation Act of 1966, as amended, we also concur with FHWA's finding of "Adverse Effect" for both the Madison National Register of Historic Places District and the Madison, Indiana, National Historic Landmark District.

For the most part, we are satisfied with the mitigation that was proposed and on which consensus seemed to be reached during the March 9 conference call. There are a few points on which we would like to comment specifically.

Various consulting parties, including our office, had asked in a previous meeting or in written comments that serious consideration be given to whether the house at 112 Sering Street could be moved out of the path of the project, if it proved not to be possible to leave it in place. We still think that should be looked into. As other consulting parties said during the March 9 conference call, an effort should be made to obtain an opinion from a reputable building mover of the feasibility of separating the main story from the lower story and the side addition containing plumbing and an estimate of the cost of removing the original main story of the building from its current location. If doing so would be feasible, it also would be advisable to see if there is a suitable lot within the district that is either owned by the City of Madison or that could be acquired. The house is modest but is one of the oldest houses remaining in the eastern part of either district. We understand, as was pointed out on March 9, that the cost of the relocation of 112 Sering Street would reduce the amount of mitigation funds that would be made available for this project. However,

aside from FHWA, INDOT, the consultants, and perhaps the City of Madison, the consulting parties do not know how much mitigation funding has been budgeted for this project. It also is not yet known whether the kinds of context-sensitive design elements that the consulting parties might request during the advisory team meetings (such as terraced, stone-faced, and landscaped retaining walls for the hill cut) would be feasible or prudent in the opinion of FHWA. Consequently, from the local consulting parties' standpoint, not investigating the feasibility and cost of relocating 112 Sering Street might result in saving mitigation funds that later could not be used for the local parties' desired context-sensitive design elements, anyway. Accordingly, we second the request from other consulting parties' for at least a mover's opinion on the feasibility of relocating the main story of the house at 112 Sering Street and a rough estimate of the costs of relocation and site acquisition.

We were pleased to learn during the March 9 conference call that a traffic signal is now considered to be warranted at the Harrison Street (US 421)-Second Street intersection upon completion of the project. The intangible benefit of walkability within the two districts is obviously of significant value to the local consulting parties. It also could reduce or avoid the effect of isolating the eastern end of the districts. The signal should allow at least pedestrians and bicyclists to activate the red light facing Harrison and the "walk" light facing Second. There also should be either a regular interval of green light for vehicular traffic on Second or a sensor-activated green light for Harrison. Sensor activation, if feasible, might be the best solution. My staff has observed, in another Indiana community, that on weekends, the green light for the US highway is programmed to be of much longer duration than the green light for cross streets, regardless of the relative volumes of traffic on the US highway and the cross streets at any particular time. Given the reality that, generally speaking, the volume of traffic on Harrison will be higher than that on Second, it seems realistic that such a system of giving green light preference to Harrison would be implemented. If that kind of system were used at Harrison and Second, however, both motorists and pedestrians having to wait a long time for the light to change could be tempted to cross or to turn against the red light or "don't walk" light, increasing the chances of an accident. We foresee a particular risk of this kind of accident from vehicular traffic coming around the bend through the proposed hill cut between Main Street and Harrison (*i.e.,* southbound on US 421), because it is apparent that the sight distance to the Harrison-Second intersection for sonthbound traffic on Harrison would be less than that for northbound traffic coming off the bridge. We recall having heard during the conference call that installation of a traffic signal cannot be part of the mitigation, because it is an engineering decision, but it could be among the issues to be discussed by the proposed advisory team. Would it not be possible to list the traffic signal at Harrison and Second in the upcoming memorandum of agreement ("MOA") as an example of the issues that the advisory team would discuss?

We also suggested in our August 19, 2016, letter that Alternative 6 could have an adverse effect that had not been identified by the consultants, unless on-street parking continues to be allowed on Second Street between Harrison Street (US 421) and Sering Street. One consulting party had asked at the August 11, 2016, consulting parties meeting that on-street parking in that block be provided as a mitigation measure—presumably for other adverse effects—but we suggested that eliminating on-street parking in that block could actually have an adverse effect on one or more contributing houses in that block. That consulting party, who is a resident of the block, stated that she must park her vehicle on Second, because she has no driveway, and she also said that a neighbor has two more vehicles than he can fit into his driveway and must park them on Second. We recognize that the marked aerial photograph/map for Alternative 6 in the effects memorandum submitted previously is schematic, but it shows only two, through lanes for that block of Second Street (which would become SR 56). A change in the use or configuration of Second Street that results in a lack or shortage of parking for residents of that block likely would diminish the ntility of contributing houses along that part of Second and discourage their continued use. It is unclear at this time whether the availability of parking in that block of Second Street would be among the issues given in the MOA to the advisory team for discussion, but we think it should be.

As previously indicated in our November 18, 2016, letter to Dr. Linda Weintraut (Weintraut & Associates, Inc.), we concur with the recommendation of the archaeologist, as expressed in the Phase I archaeological records check and field reconnaissance report (Goldbach, 10/2016), that further archaeological investigation is not necessary at archaeological sites 12-Je-550, 12-Je-0554, 12-Je-0556, 12-Je-0557, 12-Je-0558, 12-Je-0559, and 12-Je-0560. We also agree that archaeological sites 12-Je-0549, 12-Je-0552, 12-Je-0553, 12-Je-0555, and 12-Je-0561 will require additional archival research and photo documentation; and that archaeological sites 12-Je-0551 and 12-Je-0553 will require a Phase Ib investigation unless they can be avoided by construction activities. It is our understanding that details of the proposed measures to address these recommendations, as were discussed during the March 9, 2017, conference call, will be included in the upcoming MOA.

If any prehistoric or historic archaeological artifacts or human remains are uncovered during construction, demolition, or earthmoving activities, state law (Indiana Code 14-21-1-27 and -29) requires that the discovery be

reported to the Indiana Department of Natural Resources ("IDNR") within two (2) business days. In that event, please call (317) 232-1646. Be advised that adherence to Indiana Code 14-21-1-27 and -29 does not obviate the need to adhere to applicable federal statutes and regulations, including but not limited to 36 C.F.R. Part 800.

INDOT's February 14 letter also asked us to provide, for Section 4(f) purposes, our opinion "on which alternative results in the Least Overall Harm." We do not know a great deal more about the design of Alternative 6 than we did at the time of our August 19 letter, other than that it is the preferred alternative. As we said in the August 19 letter, however, based on what we currently know, it appears to us, qualitatively speaking, that Alternative 6 is less likely to have as severe an overall impact on the Madison National Register of Historic Places District or the Madison, Indiana, National Historic Landmark District as Alternative 4 is likely to have, even if Alternative 4 would require slightly fewer acquisitions of properties that contribute to one or both of the districts. Consequently, we continue to think that Alternative 6 would result in the Least Overall Harm.

If you have questions about archaeological issues, please contact Wade T. Tharp at (317) 232-1650 or wtharp1@dnr.IN.gov. Questions about buildings, structures, or districts should be directed to John Carr at (317) 233-1949 or jcarr@dnr.IN.gov.

In all future correspondence regarding the US 421 New Road Construction Project in Madison (Des. No. 1400918) please continue to refer to DHPA No. 18317.

Very truly yours,

Mitchell K. Zoll
Deputy State Historic Preservation Officer

MKZ:JLC:WTT:wtt

cc: Linda Weintraut, Ph.D., Weintraut & Associates, Inc.

emc: Michelle Allen, Federal Highway Administration, Indiana Division
David Clarke, Federal Preservation Officer, Federal Highway Administration, Office of Project Development and Environmental Review
Carolyn Nelson, Federal Highway Administration, Office of Project Development and Environmental Review
MaryAnn Naber, Advisory Council on Historic Preservation
Michele Curran, Ph.D., National Park Service, Midwest Regional Office
Anuradha Kumar, Indiana Department of Transportation
Shaun Miller, Indiana Department of Transportation
Mary Kennedy, Indiana Department of Transportation
Patrick Carpenter, Indiana Department of Transportation
Shirley Clark, Indiana Department of Transportation
Adam Burns, Crawford, Murphy and Tilly Engineers and Consultant
Linda Weintraut, Ph.D., Weintraut & Associates, Inc.
Jason Goldbach, Weintraut & Associates, Inc.
Mitchell Zoll, Deputy State Historic Preservation Officer, Indiana Department of Natural Resources
Chad Slider, Indiana Department of Natural Resources
Wade T. Tharp, Indiana Department of Natural Resources
John Carr, Indiana Department of Natural Resources

INDIANA DEPARTMENT OF TRANSPORTATION

100 North Senate Avenue
Room N642
Indianapolis, Indiana 46204

PHONE: (317) 233-2061
FAX: (317) 232-4929

Michael R. Pence, Governor
Brandye L. Hendrickson, Commissioner

April 27, 2017

Dear Consulting Party:

The Indiana Department of Transportation (INDOT) with funding from the Federal Highway Administration (FHWA) is planning a project in Madison, Jefferson County, Indiana: US 421 New Road Construction (Des. No.: 1400918). Section 106 of the National Historic Preservation Act requires federal agencies to take into account the effects of their undertaking on historic properties (both archaeological and structures). In addition, Section 110 of the National Historic Preservation Act provides guidance on the special requirements for protecting NHLs, including statutory requirements and resolution of adverse effects.

Weintraut & Associates identified two aboveground historic properties within the project's Area of Potential Effects: the Madison, Indiana National Historic Landmark District and the Madison National Register of Historic Places District. On February 14, 2017, FHWA signed a finding of Adverse Effect on the Madison, Indiana National Historic Landmark District and the Madison National Register of Historic Places District. A conference call was held on March 9, 2017, to discuss ways to mitigate those adverse effects.

During that conference call, consulting parties asked that INDOT consider relocating the house at 112 Sering Street to another location within Madison. Since that time, CMT has investigated the possibility of relocating the house, especially the cost associated with moving the house at 112 Sering Street. CMT received quotes from two independent house moving companies to develop the house relocation costs. Available city appraising data was used to estimate the land cost for the move, and RSM Means (2016), a published industry cost estimating handbook was utilized to estimate the remaining costs associated with relocating the structure. The result of that investigation is attached. While we recognize that this house is part of the historic fabric of the area, we are proposing salvaging the materials from the house rather than moving it; as we believe those mitigation funds can be better utilized in other context sensitive finishes throughout the project.

The project consultants have prepared a Memorandum of Agreement that reflects the discussion and the agreed upon stipulations from that conference call. There are some portions of the Memorandum of Agreement that are highlighted, pending further discussion with the National Park Service. A member of the project team will be reaching out to Dr. Curran to finalize the appropriate language.

You may access the **Memorandum of Agreement (Des. No.: 1400918; DHPA No.: 18317)** at the IN-SCOPE website located at the following link.

http://netservices.indot.in.gov/Section106Documents/Default.aspx

The Des No. is the most efficient search term, once in IN-SCOPE. Any invited consulting party who makes such a request to Weintraut & Associates within seven (7) days of receipt of this notification will receive a hard copy of this material.

To facilitate the development of this project, please respond with comments on the **Memorandum of Agreement for the US 421 New Road Project (Des. No.: 1400918; DHPA No.: 18317) within 30 days of the transmittal of this letter.** If you have comments on a specific stipulation, please refer to the page and line number in your comment. Please direct any comments to Linda Weintraut via email at linda@weintrautinc.com or 317-733-9770.

Tribal contacts may contact Shaun Miller at smiller.indot.in.gov or 317-233-2061or Michelle Allen at FHWA at michelle.allen@dot.gov or 317-226-7344.

Thank you for your participation in this project.

Best regards,

Anuradha Kumar
Manager, Cultural Resources Office
INDOT Environmental Services

Enclosure

Emc: Michelle Allen, FHWA
Linda Weintraut, Weintraut & Associates
Adam Burns, Crawford Murphy & Tilly

	HISTORIC HOUSE RELOCATION		
	FINAL QUANTITY	361300	$

CMT

Des. No. 1400918 - US 421 East Approach to Milton-Madison Bridge — Job No. 15709-01-00
Madison, Indiana — Calc's By: RCC — Date: 4/19/2017
Jefferson County — CHK By: AJB — Date: 4/20/2017

CODE NUMBER	PAY ITEM NAME	
	HISTORIC HOUSE RELOCATION	

ITEM #	DESCRIPTION	UNIT	QUANTITY	UNIT $	COST
	Building Relocation (1)	Lsum	1	$ 35,000.00	$ 35,000.00
	Relocation Incidentals				
	Utility Drops	Each	11.00	$ 4,500.00	$ 49,500.00
	Maintenance of Traffic	Day	6.00	$ 800.00	$ 4,800.00
	Site Improvements				
	Utility Connections	Each	5.00	$ 2,750.00	$ 13,750.00
	Foundation Construction	SFT	800.00	$ 15.75	$ 12,600.00
	Permitting	Lsum	1.00	$ 650.00	$ 650.00
	Site Acquisition	Acre	0.20	$ 225,000.00	$ 45,000.00
			Base Relocation Subtotal		*$ 161,300.00*
	Interior Renovation (2)*	SFT	800.00	$ 250.00	$ 200,000.00

Notes:

1 Building relocation quotes provided by Wolfe Movers (North Manchester, IN) and MCF House Movers (Petersburg, IN).

2 Interior Renovation cost generated from RSM Means (2016), Single Story, Luxury Finish

* Potential Deferred Costs

TOTAL $ 361,300.00

CONSULTING PARTY MEETING SUMMARY

DATE: July 11, 2017, 10 to 10:45 a.m.
LOCATION: Conference Call
SUBJECT: US 421 New Road Construction (Des. No.: 1400918)
Conference Call to discuss Mitigation Stipulations

ATTENDEES:

Nicole Schell, City of Madison
Link Ludington, Cornerstone Society
Greg Sekula, Indiana Landmarks
MaryAnn Naber, Advisory Council on Historic Preservation
Betsy Merritt, National Trust for Historic Preservation
Teri Lu Adler, Resident
Peggy Vlerebome, Resident
Rick Grote, Resident
John Carr, Indiana Department of Natural Resources, Division of Historic Preservation & Archaeology/ State Historic Preservation Officer (IDNR,DHPA/SHPO)
Wade Tharp, (IDNR,DHPA/SHPO)
Michelle Allen, Federal Highway Administration (FHWA)
David Clarke, FHWA
Whitney Carlin, Indiana Department of Transportation (INDOT)
Patrick Carpenter, INDOT-Cultural Resources Office (CRO)
Mary Kennedy, INDOT-CRO
Shaun Miller, INDOT-CRO
Anthony Ross, INDOT-CRO
Devin Stettler, United Consulting
Adam Burns, Crawford, Murphy & Tilly (CMT)
Linda Weintraut, Weintraut & Associates (W&A)

Michelle Allen (FHWA) thanked everyone for joining the call. Adam Burns provided a roll call of consulting parties; those on the call answered affirmatively.

Linda Weintraut stated that the purpose of the call was to discuss the Memorandum of Agreement (MOA) and other documents that had been uploaded to INSCOPE on June 27, 2017. She said that she hoped that the consulting parties had a chance to review the consulting party comment form since it documents how each comment was addressed and the location of that change within the MOA. Weintraut noted consulting parties had expressed specific concern about three topics; those topics would be discussed during this call.

The first topic was the historic preservation officer for the City of Madison; presently it is a part time position. Weintraut said that INDOT had tried to accommodate concerns of the consulting parties regarding staffing by writing the stipulation such that the position would be funded as a part time position for four years or as a fulltime for two years. Greg Sekula (Indiana Landmarks) said that Landmarks had hoped that the funding would enhance one or both the positions with additional staff such that the historic preservation officer could become a fulltime position. Link Ludington (Cornerstone Society) indicated that he understood that flexibility is in the best interest of the city but it is disappointing from the standpoint of the preservation community that a firm commitment to a fulltime historic preservation officer is not being made.

Relocation Costs associated with the house at 106/112 Sering Street: Burns walked through the letter that had been distributed on INSCOPE at the same time as the MOA. This letter detailed the costs associated with moving the house, the path that would likely be used, a potential relocation site, and renovation costs, all of which totaled about $389,500.

Both Ludington and Sekula expressed disagreement with the costs provided for renovation for the house, once it reached its destination. Ludington said that he understood that this is a lot of money to move the house but without knowing the history associated with the house, it is difficult to agree that moving the house is too great a cost. He had not been in the house, and to his knowledge, no historical research had been conducted on the house.

Allen said that FHWA looks at the cost of the endeavor and the desire of the community when looking for ways to mitigate adverse effects. There does not seem to be a general community consensus to move this house.

Regarding the Advisory Committee, Weintraut pointed to the specific stipulations that had been added, especially those that detailed the topics that the Advisory Committee would review and comment upon. Sekula said from his experience, the Advisory Committee was a worthwhile endeavor in terms of reviewing design and addressing aesthetic issues. Betsy Merritt (National Trust for Historic Preservation) said that she agreed and would appreciate the opportunity to call in rather than attending in person. FHWA indicated that this would be possible.

MaryAnn Naber (Advisory Council on Historic Preservation) asked what the basis would be for calling each meeting (i.e.: would meetings be scheduled regularly or based on milestones?) Burns said that the intent of convening a meeting would be triggered by a design milestone.

John Carr (IDNR, DHPA/SHPO) said that he agreed with the Advisory Council. He liked Stipulation I.B.5., but was hopeful that there could be regular updates on design details. Adam Burns said that a project update could be provided every other month in the form of a newsletter but asked the consulting parties to recognize that sometimes there is little in terms of updates because design moves in fits and starts.

Weintraut said the MOA would be updated to reflect the two changes requested by the Advisory Council and the SHPO).

Rick Grote, the owner of the house at 106/112 Sering Street, posed questions about timing of the project and the salvage of architectural details. Grote expressed concern regarding the salvage operation. Weintraut said that the MOA provides for a dispensation plan that sets forth the process by with the architectural items are salvaged. She said in past projects, it had occurred after the house was vacated. In a prior project, a consultant had tagged, photographed, and inventoried items such as door knobs, doors, molding, items that other property owners within the district had then used in their homes. Grote said that he would like to keep the furnaces, etc. It was suggested that this should be part of the purchase agreement and would not have to be part of the salvage. Grote also questioned the timing of the purchase of this house since he has tenants who are not renewing their lease and he has concerns about his ability to rent it to others. Burns said that we are sensitive to those issues but purchase cannot occur until after NEPA is concluded (3 to 4 months) and after the Uniform Act procedures, right of way engineering, property appraisal and negotiations, are completed (about 9 months).

Next Steps: Send in comments prior to the **deadline on July 27, 2017**. The MOA will be updated to include the two additional items discussed today; then it will be circulated for review and signature.

The meeting adjourned at 10:45.

Oliphant, Mike

To: Adam Burns
Subject: RE: US 421 New Road Project (Des 1400918) Consulting Party Call Summary

---

From: MaryAnn Naber [mailto:mnaber@achp.gov]
Sent: Saturday, August 12, 2017 2:54 PM
To: Allen, Michelle (FHWA)
Cc: Patrick Carpenter; Sarah Stokely
Subject: Re: US 421 New Road Project (Des 1400918) Consulting Party Call Summary

Hi, Michelle-

Thank you for providing the latest draft of the MOA for the US 421 Project for our review and comment. Thank you for making the changes we discussed. We are satisfied with the draft provided dated August 2, 2017, and have no objection to the agreement moving forward in this form.

MARYANN NABER
Senior Program Analyst, FHWA Liaison
Advisory Council on Historic Preservation

_____
From: Allen, Michelle (FHWA) <michelle.allen@dot.gov>
Sent: Friday, August 4, 2017 12:44 PM
Subject: RE: US 421 New Road Project (Des 1400918) Consulting Party Call Summary
To: MaryAnn Naber <mnaber@achp.gov>
Cc: Patrick Carpenter <pacarpenter@indot.in.gov>

Hi MaryAnn,

I have attached both the redline and clean versions of the MOA. We have made a couple changes that were discussed during our conference call with consulting parties, and also the changes you recommended. We did get a response from our SHPO, but they did not have any recommended changes to the agreement. No other written comments were received on the last version.

We will be sending out an email so the other consulting parties can view the changes made as well, but I wanted to get you the redline and word versions to help with your review.

If possible, can you get us any remaining comments or changes in the next two weeks? Then we will work to prepare for signatures.

Thanks,
Michelle Allen
FHWA-IN
(317) 226-7344

From: MaryAnn Naber [MaryAnn Naber [mailto:mnaber@achp.gov]
Sent: Tuesday, August 01, 2017 10:36 AM
To: Allen, Michelle (FHWA)