Indiana Design Manual Updates on Chapter 43: Horizontal Alignment Chapter 46: At Grade Intersections

Mark Orton, INDOT Standards & Policy

NextLevel INDIANA

Chapter 43: Horizontal Alignment

Chapter 43 -Summary of Revisions

- Horizontal Alignment Practices
  - Minimum Length of Curve
  - Broken-Back Curves
  - Maximum Deflection without Horizontal Curve
  - Revision to Maximum Superelevation Rate for interchanges in Urban Areas
- Clean up Tables
  - Elimination of some figures and replaced with Tables
- Horizontal Sightline Offset Revision
  - Current Figures and Tables
  - NCHRP Report 910
- Superelevation Runoff Changes
  - Figures no longer incorporated 2018 AASHTO GB
  - Revisions to the distribution of the transition.
  - New range for maximum gradient
  - New Policy for using minimum superelevation runoff length

NextLevel INDIANA

Section 43-2.05 Minimum Length of Curve

Δ (deg)	Minimum Curve Length (ft)
≤ 1	100
$1 < \Delta \leq 2$	200
$2 < \Delta \leq 3$	300
$3 < \Delta \leq 4$	400
$4 < \Delta \leq 5$	500
> 5	Calculated Length

AASHTO since 1954 has not deviated from the following:

"For small deflections angles, curves should be sufficiently long to avoid the appearance of a kink. Curves should be at least 500 ft long for a central angle of 5 degrees, and the minimum length should be increased 100 ft for each 1-degree decrease in the central angle."

NextLevel INDIANA

Maximum Centerline Deflection without a Curve

DESIGN SPEED (mph)		MAX. DEFLECTION *
LOW SPEED	25	5° 30'
	30	3° 45'
	35	2° 45'
	40	2° 05'
	45	1° 40'
HIGH SPEED	50	1° 05'
	55	1° 00'
	60	0° 55'
	65	0° 50'
	70	0° 45'
	75	0° 45'

* ROUNDED TO NEAREST 5'

Ohio DOT

Design Speed (mph)	Maximum Angle Without Curve
25	2°17'
30	1°55'
35	1°38'
40	1°26'
45	1°16'
50	1°09'
55	1°03'
60	0°57'
65	0°53'
70	0°49'
75	0°46'
80	0°43'

Washington State DOT

NextLevel INDIANA

Figure 43-3C Superelevation Rate for Low Speed

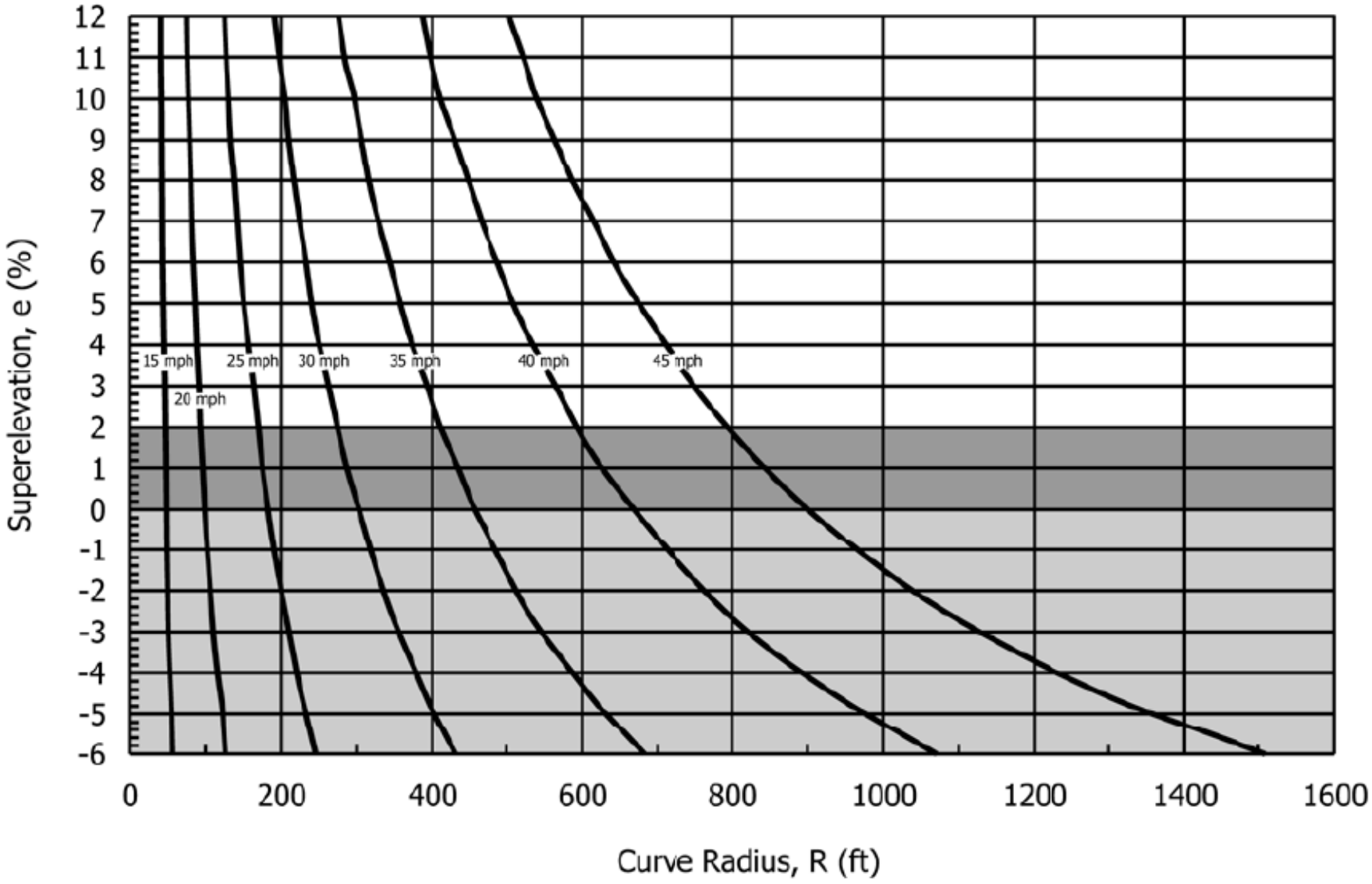

Figure 43-3C Superelevation Rate for Low Speed

Minimum Radii and Superelevation for Low-Speed Streets in Urban Areas													
e %	V mph	f max	V mph	f max	V mph	f max	V mph	f max	V mph	f max	V mph	f max	V mph	f max
	15	0.32	20	0.27	25	0.23	30	0.20	35	0.18	40	0.16	45	0.15
	R (ft)		R (ft)		R (ft)		R (ft)		R (ft)		R (ft)		R (ft)	
-3.0	52		111		208		353		544		821		1125	
-2.8	51		110		206		349		537		808		1107	
-2.6	51		109		204		345		530		796		1089	
-2.4	51		108		202		341		524		784		1071	
-2.2	50		108		200		337		517		773		1056	
-2.0	50		107		198		333		510		762		1038	
-1.5	49		105		194		324		495		736		1000	
0.0	47		99		181		302		454		667		900	
1.5	45		94		170		279		419		610		818	
2.0	44		92		167		273		408		593		794	
2.2	44		91		165		270		404		588		785	
2.4	44		91		164		268		400		580		776	
2.6	43		90		163		265		396		573		767	
2.8	43		89		161		263		393		567		758	
3.0	43		89		160		261		389		561		750	
3.2	43		88		159		259		385		556		742	
3.4	42		88		158		256		382		550		734	
3.6	42		87		157		254		378		544		726	
3.8	42		87		156		252		375		539		718	
4.0	42		86		154		250		371		533		711	
4.2	41		85		153		248		368		528		703	
4.4	41		85		152		246		365		522		696	
4.6	41		84		151		244		361		518		689	
4.8	41		84		150		242		358		513		682	
5.0	41		83		149		240		355		508		675	
5.2	40		83		148		238		352		503		668	
5.4	40		82		147		236		349		498		662	
5.6	40		82		146		234		346		494		655	
5.8	40		81		145		233		343		489		649	
6.0	39		81		144		231		340		485		643	
6.2	39		80		143		229		337		480		637	
6.4	39		80		142		227		335		476		631	
6.6	39		79		141		226		332		472		625	
6.8	39		79		140		224		329		468		619	
7.0	38		78		139		222		327		464		614	
7.2	38		78		138		221		324		460		608	
7.4	38		78		137		219		322		456		603	
7.6	38		77		136		217		319		452		597	
7.8	38		77		135		216		317		448		592	
8.0	38		76		134		214		314		444		587	

MINIMUM RADII AND SUPERELEVATION RATES
FOR LOW-SPEED URBAN STREETS

Horizontal Sight Distance (HSD)

Components for Determining HSD

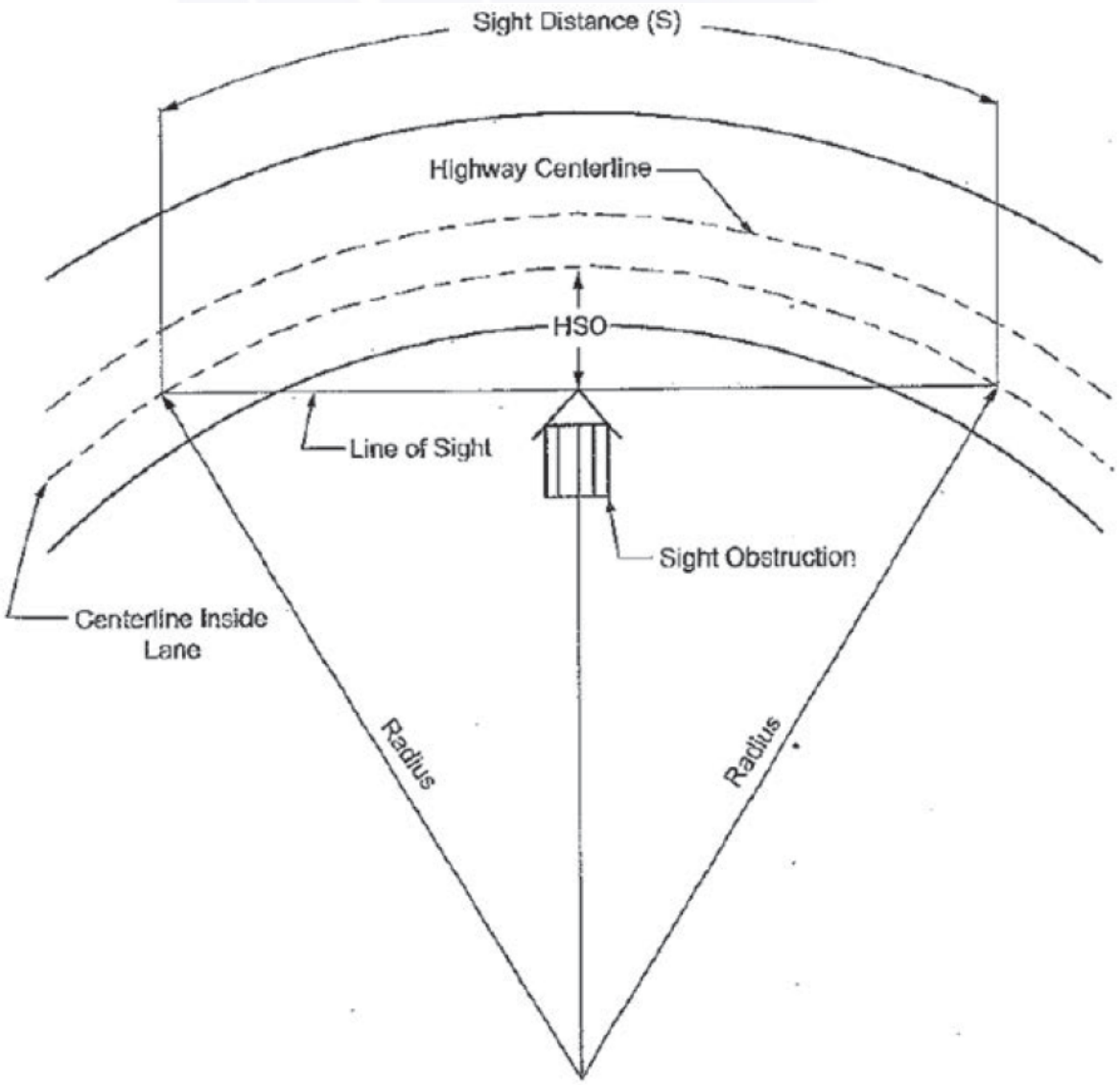

Figure 43-4A-Horizontal Sightline Offset

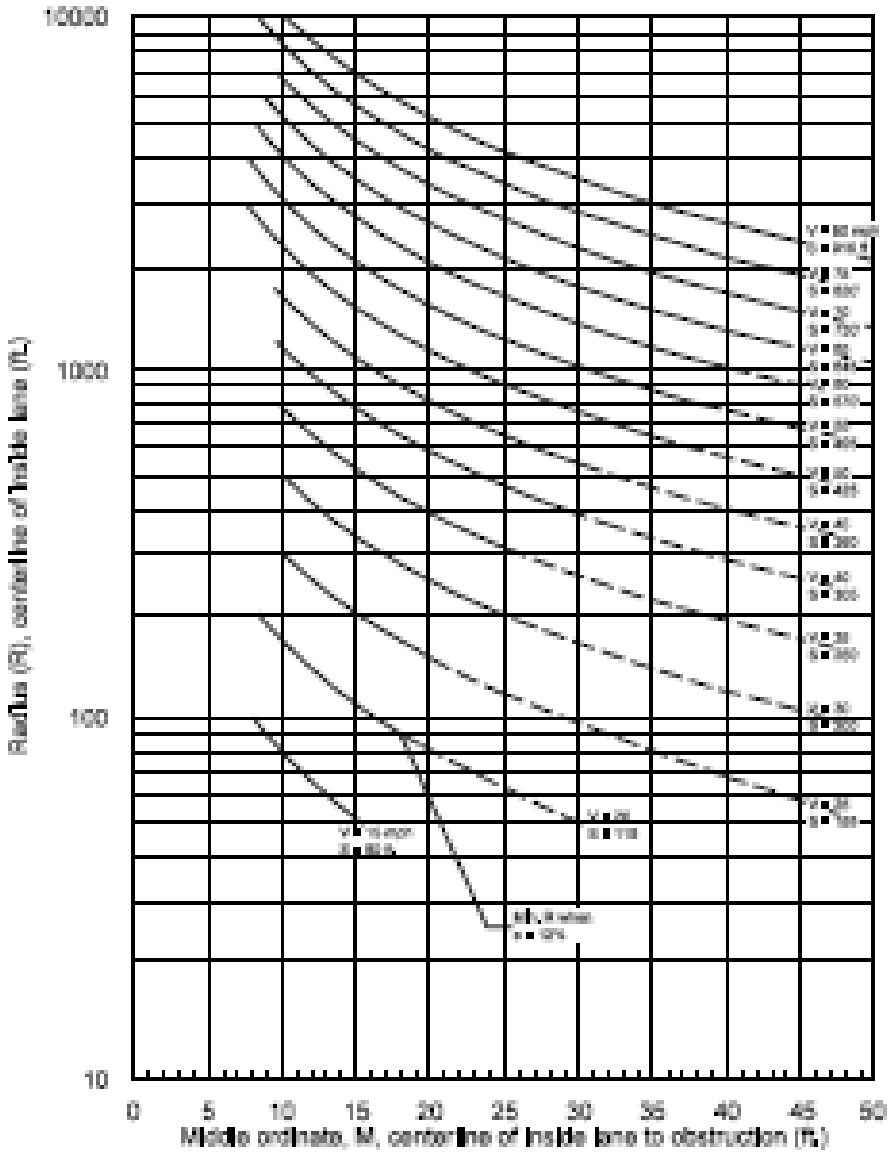

DESIGN CONTROLS FOR STOPPING SIGHT DISTANCE ON HORIZONTAL CURVE

$$M = R\left[1 - \cos\left(\frac{28.65S}{R}\right)\right] \qquad \text{(Equation 43-4.1)}$$

Where:

M = Middle ordinate, or distance from the center of the inside travel lane to the obstruction, ft

R = Radius of curve, ft

S = Stopping sight distance, ft

The Figure 43-4A and Equation 43-4.1, come from the Green Book. The Green Book fails to note that both the figure and equation only apply directly to horizontal curves that are longer than the stopping sight distance (S). If the horizontal curve is shorter than the S, the horizontal sightline offset (HSO) needed is always less than the HSO determined with the above equation or figure.

NextLevel INDIANA

Existing Figure 43-4C

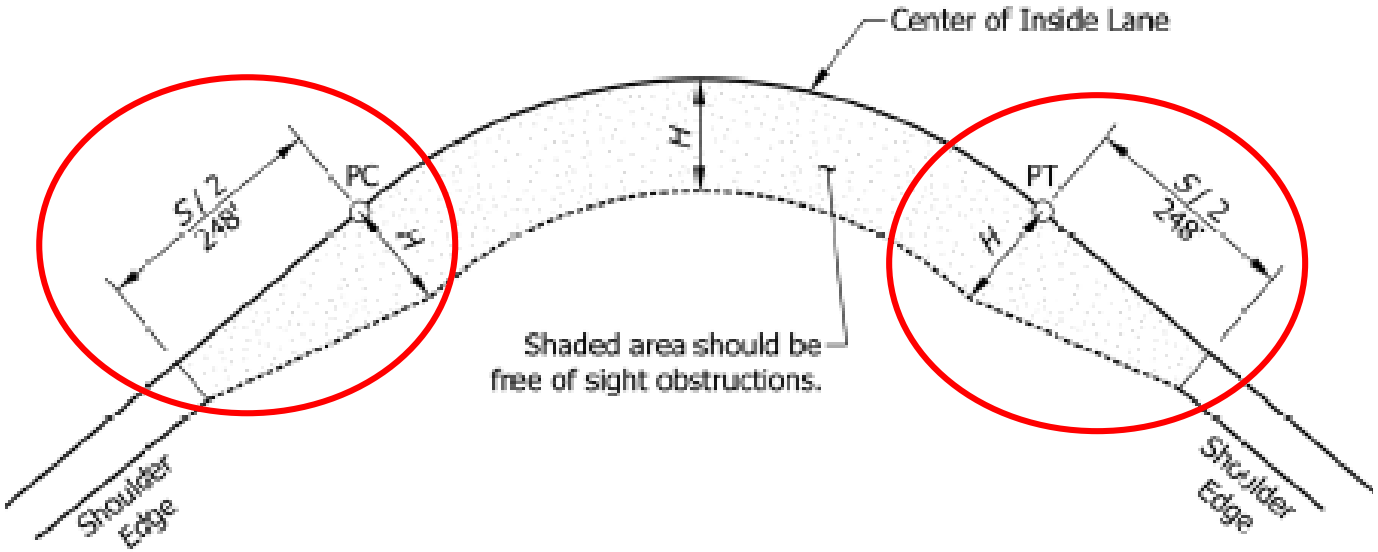

EXAMPLE:

Given: Design Speed = 55 mph, R = 1000 ft

Problem: Determine the horizontal clearance requirements for the horizontal curve.

Solution: Use the equation for horizontal clearance ($L > S$) to obtain

$$H = R\left[1 - \cos\left(\frac{28.65\ S}{R}\right)\right]$$

$$H = 1000\left[1 - \cos\left(\frac{28.65 \cdot 495}{1000}\right)\right] = 30.5 \text{ ft}$$

KEY:

H = Horizontal Sight Line Offset (ft)
S = Stopping Sight Distance (ft)
R = Radius of Curve (ft)

NOTE: This figure also illustrates the horizontal clearance requirements for the entering and exiting portion of the horizontal curve.

NextLevel INDIANA

Companion Figure not Included in IDM

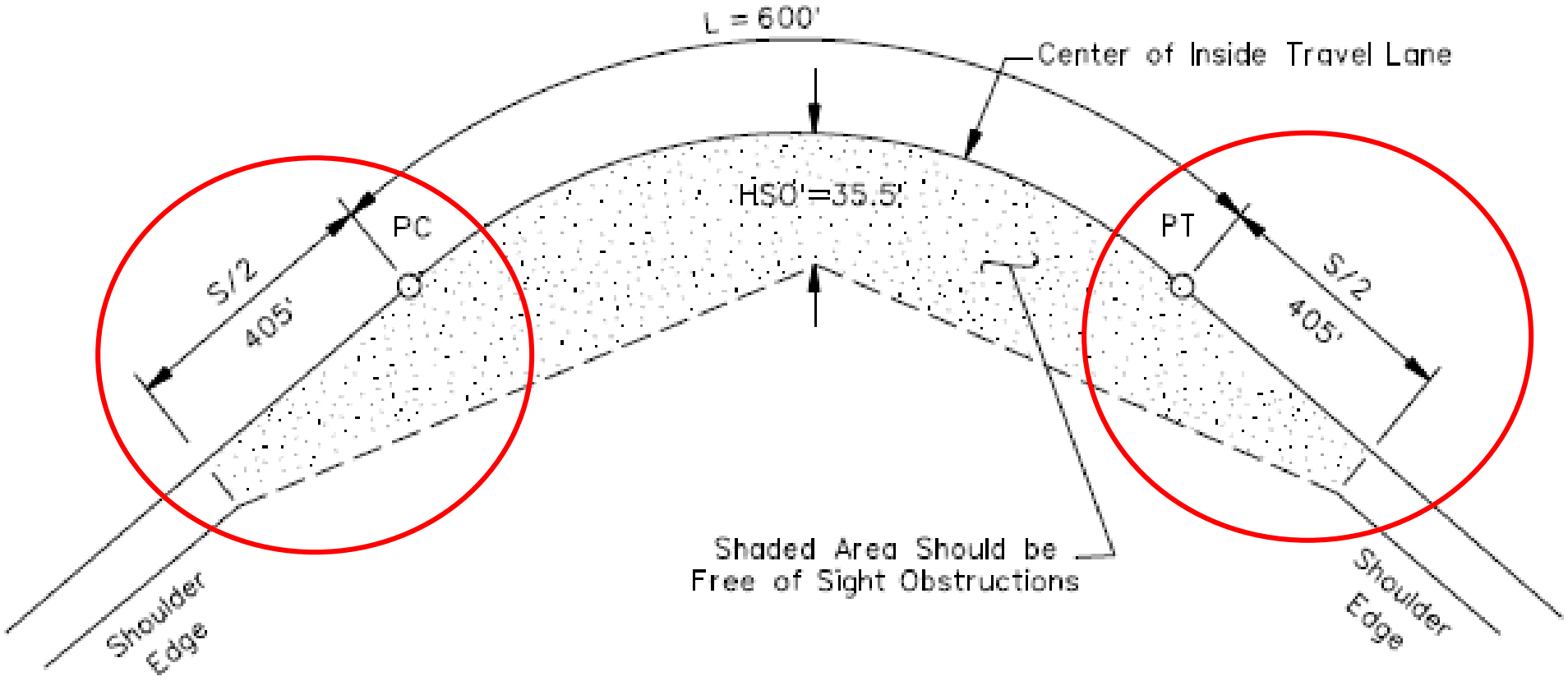

For L > S

Horizontal Sightline Offset

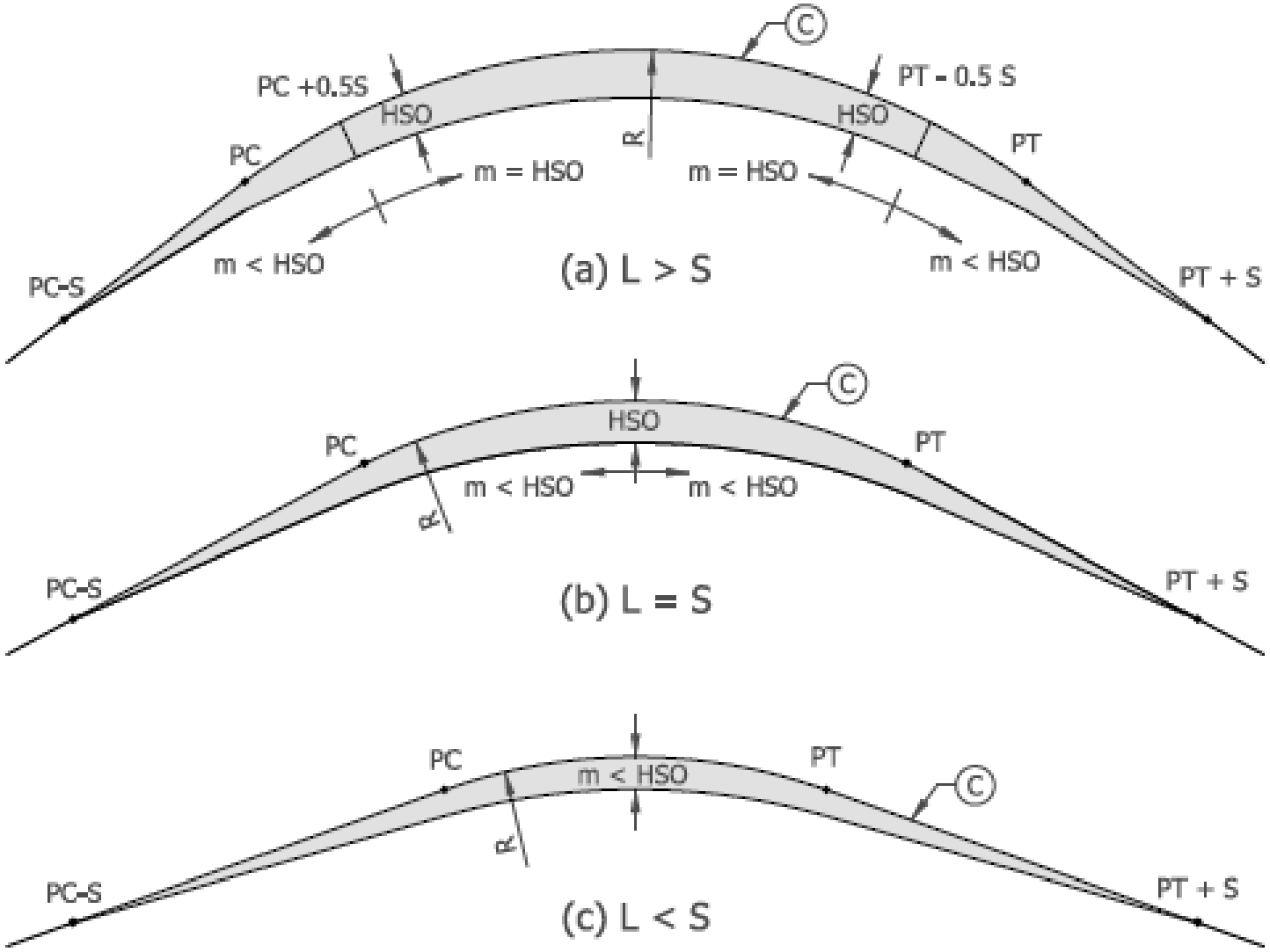

From NCHRP Report No. 910, Design Guidelines for Horizontal Sightline Offsets, 2019

Superelevation Runoff

Superelevation Runoff

The 2001 AASHTO revised the methodology for superelevation based on the NCHRP Report 439, *Superelevation Distribution Methods and Transition Designs,* 2000:

In summary:

- Stated theoretically "that values for the proportion of runoff length on the tangent in the range of 70 to 90 percent offer the best operating conditions". This was to reduce the effects lateral acceleration.
- Added table to determine the portion of runoff length on tangent based on speed and number of lanes.
- Introduced the b_w factor to determine *minimum* runoff lengths…which significantly reduce runoff lengths depending on the number of rotated lanes.

NextLevel INDIANA

Superelevation Runoff

Design Speed (mph)	Equivalent Max. *RS*	Edge-of-Travelway Slope Relative to Centerline G_{max} (%)
15	128	0.78
20	135	0.74
25	143	0.70
30	152	0.66
35	161	0.62
40	172	0.58
45	185	0.54
50	200	0.50
55	213	0.47
60	222	0.45
65	233	0.43
70	250	0.40

$$G_{max} = \frac{100}{RS}$$

RELATIVE LONGITUDINAL SLOPES
(Two-Lane Roadway)

Figure 43-3E

V (mph)	Number of Lanes Rotated			
	1	1.5	2 or 2.5	3 or 3.5
15 - 45	80%	85%	90%	90%
50 - 70	70%	75%	80%	85%

PORTION OF SUPERELEVATION RUNOFF ON TANGENT, %

Figure 43-3F

NextLevel INDIANA

Superelevation Runoff

In the 2018 AASHTO GB, based on NCHRP Report No. 774, *Superelevation Criteria for Sharp Horizontal Curves on Steep Grades*, 2013, the superelevation transition runoff distribution was revised again.

- It was found that *"placing too great a proportion of the runoff length on the approach tangent develops excessive superelevation prior to the PC and results in negative side friction through much of the transition. With negative side friction, drivers are required to correctively steer uphill against the developing superelevation in order to maintain position in their lane."*
- To achieve a balance between the lateral acceleration and negative side friction, it was proposed to place 50 to 80 percent of the runoff on the tangent. Most agencies are using 67%.

NextLevel INDIANA

Figures no Longer in the 2018 AASHTO

Design Speed (mph)	Equivalent Max. *RS*	Edge-of-Travelway Slope Relative to Centerline G_{max} (%)
15	128	0.78
20	135	0.74
25	143	0.70
30	152	0.66
35	161	0.62
40	172	0.58
45	185	0.54
50	200	0.50
55	213	0.47
60	222	0.45
65	233	0.43
70	250	0.40

$$G_{max} = \frac{100}{RS}$$

RELATIVE LONGITUDINAL SLOPES
(Two-Lane Roadway)

Figure 43-3E

V (mph)	Number of Lanes Rotated			
	1	1.5	2 or 2.5	3 or 3.5
15 - 45	80%	85%	90%	90%
50 - 70	70%	75%	80%	85%

PORTION OF SUPERELEVATION RUNOFF ON TANGENT, %

Figure 43-3F

NextLevel INDIANA

Superelevation Runoff

INDOT Proposed Policy:

- The 2018 AASHTO eliminated the table gradients that had been in previous Green Books and defers to the text in the Chapter which mirrors the values from 50 mph and lower, however it capped the maximum gradient at 0.50% for 50 mph and greater.
- INDOT is proposing that the 67% of the runoff length to be on the tangent.
- Due to the fact that INDOT facilities are consider a higher type facilities, the maximum gradient has been raised for speeds greater than 50 mph, and that the distribution on the tangent is reduced, the adjustment factor table has been revised such that $b_w = 1$ for INDOT facilities.

NextLevel INDIANA

Superelevation Runoff - Revised Tables

Adjustment Factor, b_w		
Number of Lanes, Rotated	Interstates, Freeways and Ramps	Others
1	1.00	1.00
1.5	1.00	0.83
2	1.00	0.75
2.5	1.00	0.70
3	1.00	0.67
3.5	1.00	0.64

Adjustment Factor for Number of Lanes Rotated

Design Speed (mph)	Equivalent Maximum Relative Slope (*RS*)	Maximum Relative Gradient *G = RS x 100%*
15	1:128	0.78
20	1:135	0.74
25	1:143	0.70
30	1:152	0.66
35	1:161	0.62
40	1:172	0.58
45	1:185	0.54
≥ 50	1:200	0.50

Maximum Relative Slopes and Gradients

NextLevel INDIANA

Superelevation Runoff

Concerns with using the b_w factor <1 are due to the fact that it reduces the actual gradient substantially. See below:

Assume Design speed 70 mph, and rotating 3-lanes with an e = 8%.

Percent of the runoff on the tangent from Figure 43-3F is 85%.

Gr is the resultant gradient for the calculated runoff length.

V	70
bw	0.67
n	3
w	12
e	8.00%
G	0.50%

Lr	Lr x 0.85	Gr	DS (mph)
386	328	0.75	< 20
Lr	Lr x 0.67	Gr	
386	259	0.75	< 20
L	L x 0.67	Gr	
576	386	0.5	≥ 50

$$L_r = \frac{wne_d(b_w)}{G}$$

$$L = \frac{wne_d}{G}$$

NextLevel INDIANA

Superelevation Runoff- The effects of b_w on G

		Number of Lanes Rotated							
		1.5(0.83)		2(0.75)		2.5(0.70)		3(0.67)	
Design Speed	G	Gr	V	Gr	V	Gr	V	Gr	V
15	0.78	0.94	<15	1.04	<15	1.11	<15	1.16	<15
20	0.74	0.89	<15	0.99	<15	1.06	<15	1.10	<15
25	0.70	0.84	<15	0.93	<15	1.00	<15	1.04	<15
30	0.66	0.80	<15	0.88	<15	0.94	<15	0.99	<15
35	0.62	0.75	19	0.83	<15	0.89	<15	0.93	<15
40	0.58	0.70	25	0.77	16	0.83	<15	0.87	<15
45	0.54	0.65	31	0.72	23	0.77	16	0.81	<15
≥50	0.50	0.60	37	0.67	29	0.71	24	0.75	19

NextLevel INDIANA

Superelevation Runoff

$$\frac{e}{100} < \frac{2.15}{1+p_{tangent}} \; x \; \frac{v^2}{gR}$$

$p_{tangent}$ - proportion of the maximum superelevation attained at the PC of the horizontal curve.

e – superelevation at PC

When designing for above minimum radius curves for specific design speeds, the curve-radius/design-superelevation-rate combinations may produce margins of safety against skidding or rollover that are lower on the approach tangent than within the limits of the horizontal curve. The above formula checks this condition. If condition is not met the designer should reduce the proportion of the maximum superelevation attained at the PC.

NextLevel INDIANA

Chapter 46 At Grade Intersections

Restricted Crossing U-Turns (RCUT)

Restricted Crossing U-Turn (RCUT)

Three Types of RCUT Intersections

- Signalized
- Stop Control
- Yield Control

Advantages:

- Total conflicts reduced from a conventional intersection from 32 to 18.
- Ideal for high speed rural median divided facilities
- Reduces conflicts for pedestrians
- Reduces crashes
- Low cost

Disadvantages:

- Longer travel distance for crossing minor road traffic.
- Longer pedestrian travel

NextLevel INDIANA

Restricted Crossing U-Turn (RCUT)

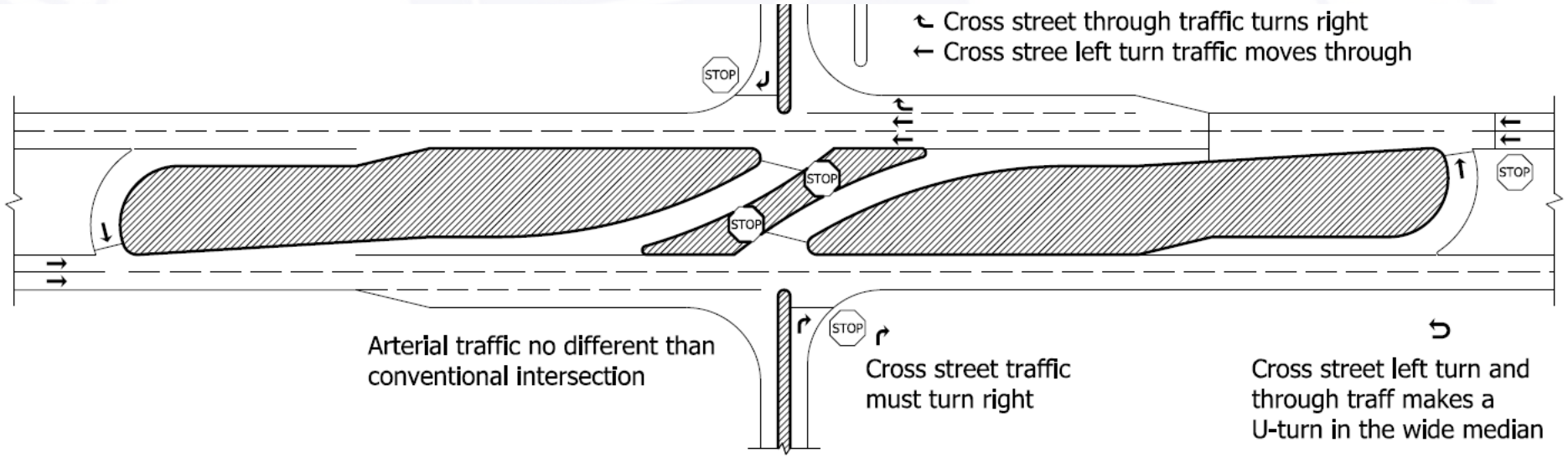

Characteristics of a RCUT intersection with stop control.

Design Elements

- The recommended design speed for RCUT intersections in rural areas is 60 mph.
- The length of all auxiliary turn lanes should be in compliance with Figure 46-4D.
- Minimum median width for a U-Turn with out a loon is 60 feet.
- The islands in the intersection and the approaches must be offset at least the width of the adjacent shoulders.
- All islands must be traversable for emergency vehicles.
- The median U-turn must be offset a minimum of 75 feet from the beginning of the taper of the left turn lane.

Design Elements -continued

- Design Vehicles for rural area should be a WB-67. In urban areas use a WB-40.
- Lane widths should be 12 feet. 11 feet may be considered if lane widening is not possible.
- Usable shoulder on loons should be 5 feet, 4 feet paved.
- Exclusive U-turn lanes for median u-turn crossovers should have a minimum length of 250 feet with a 100 feet taper. No drives should be with in 100 feet of the entrance of said turn lane to avoid merging issues.
- Spacings between the J-turn intersection and the median U-turn less than **500** feet in an urban area or greater than **800** feet in a rural area will need approval from the INDOT District Traffic Engineer.
- Intersection sight distance for the J-turn intersection, both approaches and both MUT crossovers must be in compliance with IDM Sections 46-10 and 46-14.

NextLevel INDIANA

RCUT Layout

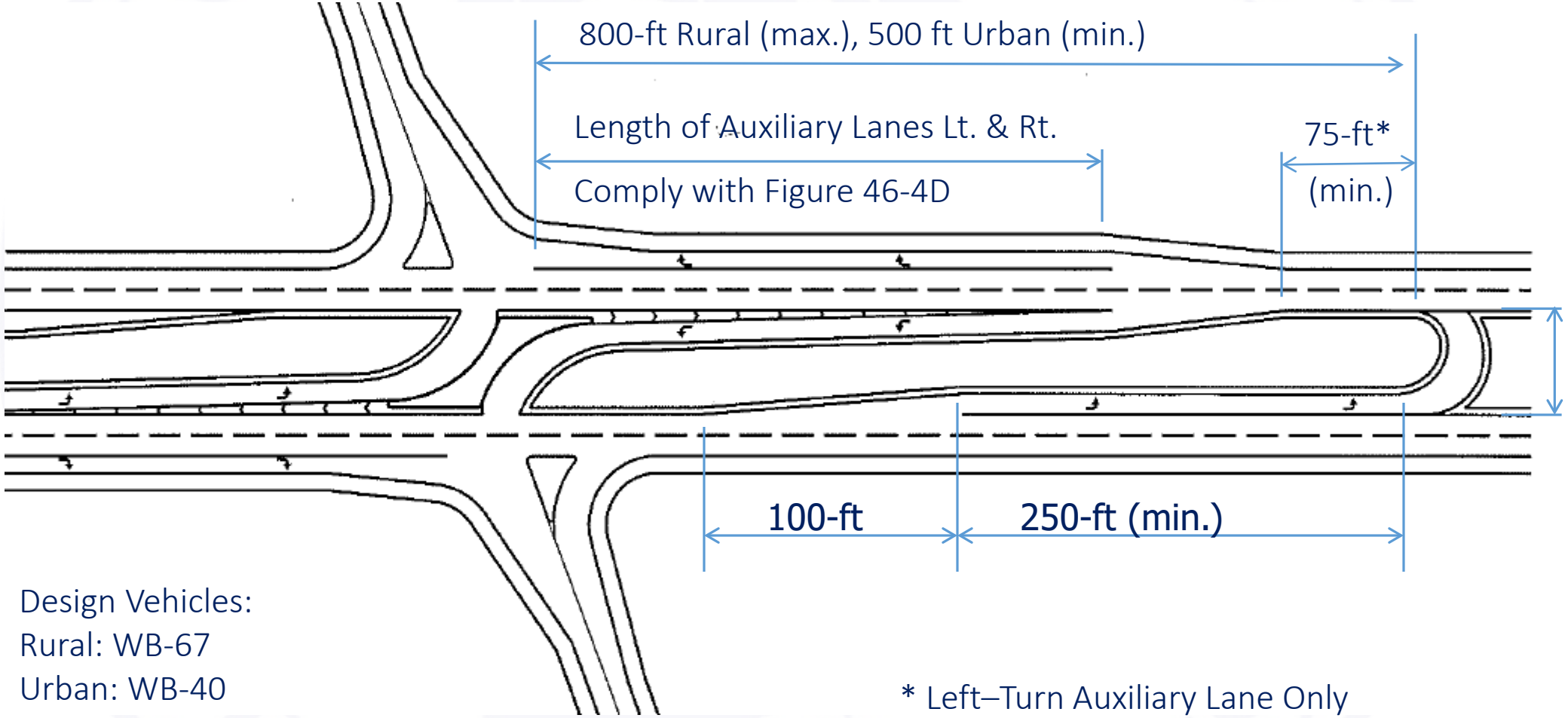

Design Vehicles:
Rural: WB-67
Urban: WB-40
Design Speed: Rural - 60 mph

* Left–Turn Auxiliary Lane Only

NextLevel INDIANA

“J-Turn” Intersection

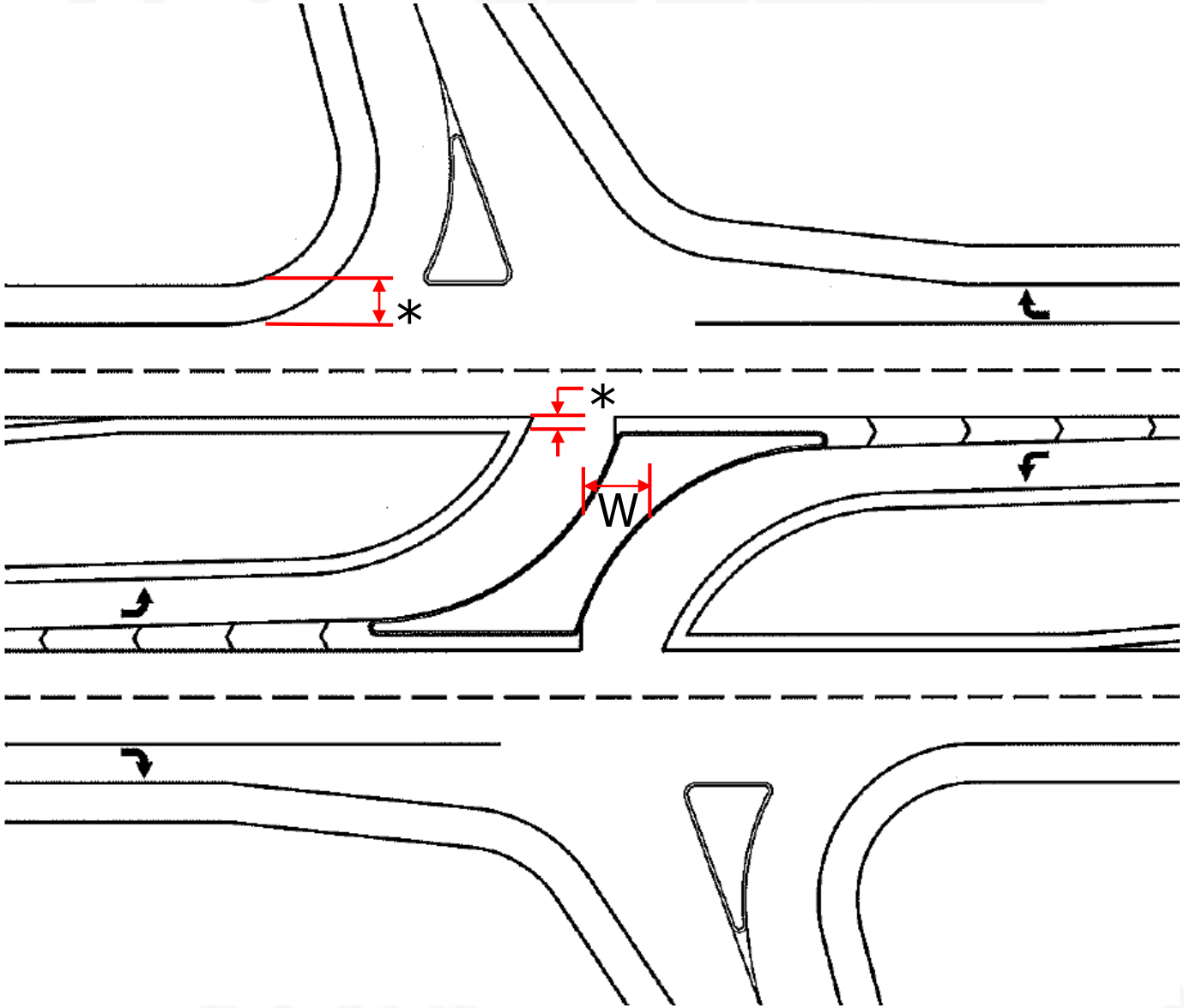

*Match Shoulder Offset (2-ft. Min.)

“W” Minimum Width of Island is 6-ft.

Truck Loon Layout

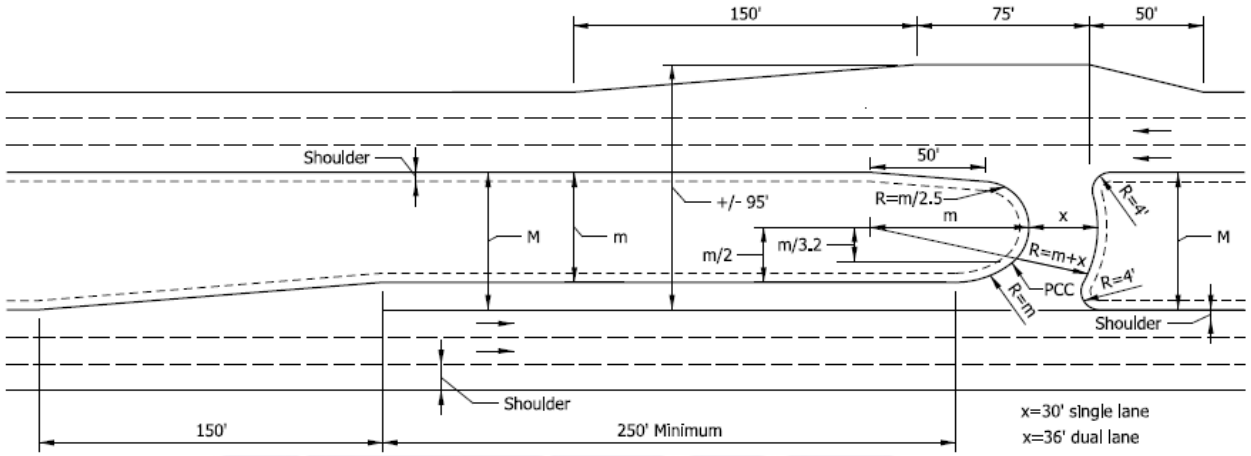

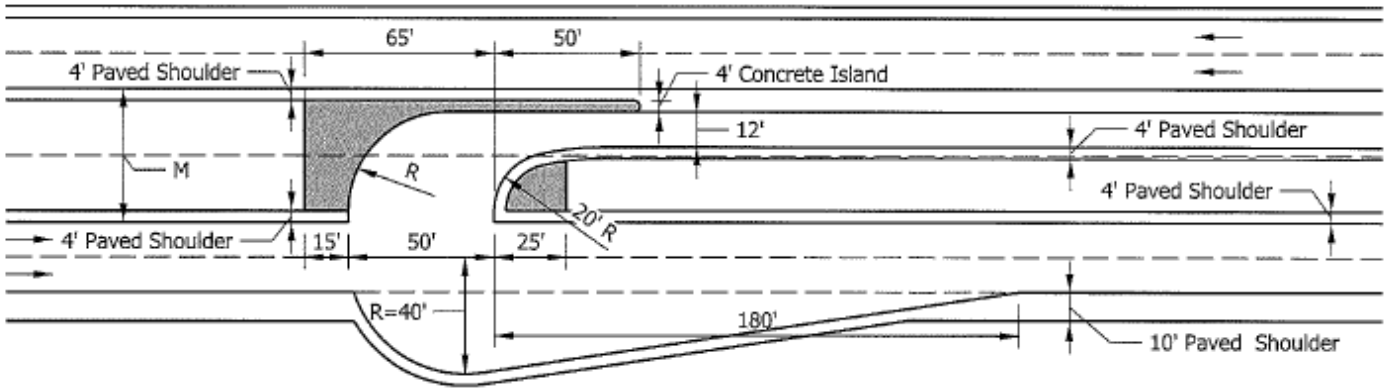

ROUNDABOUTS

Roundabout Section Review

- Roundabouts are a *Traffic Calming* intersection treatment.
  - Reduces point of conflicts and provides more efficient traffic flow.
  - Accommodates pedestrian and bicycle users.
  - Reduces the severity of crashes.
  - Expensive intersection treatment.

- INDOT experience in review of some RABs:
  - High exit speeds
  - Too many circulating lanes and unwarranted use of bypass lanes.
  - High Level of Service at Horizon year analysis
  - Speed inconsistency

NextLevel INDIANA

RAB Operational Analysis Parameters

Model Settings Dialog

Model Parameters Tab – Use the following settings for the Delay and Queue parameters (if the recommended parameters for the Roundabouts dialog where followed, these parameters should already be unchecked):

- Exclude Geometry Delay: uncheck
- HCM Delay Formula: uncheck

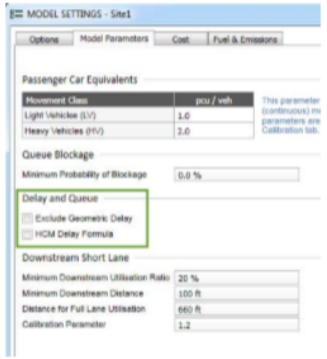

Additional considerations

- **MOE**: Unlike other intersection control types, the MOE for roundabouts is not primarily LOS. Instead, it is a mix of MOEs. For operational modeling, first ensure each lane group generates no more than about 0.85 - 0.9 v/c with reasonable queues given local conditions (keeping in mind RAB queues are moving queues, which are not perceived by drivers to be as negative as signal queues). MOE's in order of importance are v/c, percent stopped, queues, and then LOS. Ensure that you conduct sensitivity analysis by adjusting volumes and geometrics. If v/c => 0.9, consider microsimulation and closely examine volumes. In addition, 20 year analyses need not consider queues and the Peak Flow Factor should be set to 1.0.
- **Network Function**: The network function allows a user to evaluate how multiple, closely spaced intersections will interact. The control types can be any combination of roundabout, signal, two way stop control, and pedestrian midblock crossing. Sidra is a good tool for evaluating closely spaced intersections containing one or more roundabouts if it is determined that micorsimulation is not warranted (based on the complexity of the project, scope, or budget). Although for Sidra version 6.1, WSDOT does not recommend using Sidra to produce MOE's for intersection control types other than roundabouts.

Washington State Department of Transportation

WSDOT Sidra Policy Settings

This Brochure provides a reference guide for WSDOT policy settings needed to complete an analysis of roundabouts using Sidra 6 and 7 or WSDOT projects or projects affecting state owned or state interest facilities. Any adjustments to either the settings or Sidra defaults (remaining parameters not discussed in this Brochure) should be documented in a Method and Assumptions type document.

If you have questions about the content in this Brochure, please contact:

Doug McClanahan
WSDOT HQ Traffic
360-705-7984
mcclando@wsdot.wa.gov

The latest version of this Brochure is located on the WSDOT Traffic Analysis website (http://www.wsdot.wa.gov/Design/Traffic/Analysis/).

April 2018

Lane Geometry

Lane Configurati
the roundabout
already exists o
drawing availa
following Lan

- Single la
minimu
- Mulit-
minim

Roun

Opti
par

STATE OF INDIANA
INTERSECTION TRAFFIC ANALYSIS PROCEDURES

INDIANA DEPARTMENT OF TRANSPORTATION
INDOT

Traffic Engineering Division
In Coordination with:
Design Standards Office
District Traffic Offices
Federal Highway Administration

September 2018

Roundabouts Dialog

Roundabout Data Tab – Use the following settings:

ulating width: single
m 18'-20',
ea
90' – 110'
specific
ailable)
nt Factor: 1.1
g year and 1.0
n year.

ings Dialog

– Use the following settings for the General Options
s:

el of Service Method: Delay (HCM 2000)

a 7.0

Level of Service Method | Delay & Degree of Saturation (SIDRA

NextLevel INDIANA

RAB Design Parameters

Roundabout Configuration	Typical Design Vehicle	Inscribed Circle Diameter Range* (feet)	Service Volume Combined (VPH) for All Approaches	DesignYear AADT	Maximum Entry Speed (mph)
Mini	SU-30	45 to 90	<1,000	<10,000	15
Single-Lane	BUS-40 WB-50 WB-67 INDOT (Minimum)	90-150 105-150 130-180 150**	< 2,000	< 25,000	20
Multi-Lane (2-Lanes)	WB-50 WB-67 INDOT (Minimum)	150-220 165-220 180**	< 4,000	25,000 < 45,000	25-urban 30-rural
Multi-Lane (3-Lanes)	WB-50 WB-67	200-250 220-300	< 7,000	< 60,000	25

* Assumes 90° angles between entries and no more than four legs.

** INDOT approval required for smaller Inscribed Diameters

Geometric Parameter	Entry		
	Single-Lane	Two-Lane	Three-Lane
Entry Width (ft)	14-18	24-30	36-45
Effective Flare Length	150' to 300', if required for capacity		
Entry Radius (ft)	50-100	55-100	65-100
Entry Angle Ø	20° to 40°		
Circulatory Roadway Width (ft)	16-20*	28-32	42-48

* Max. 1.2 x widest entry approach width. INDOT minimum width is 20 ft.

Design Value Ranges

NextLevel INDIANA

Conflict Points in Intersections

32

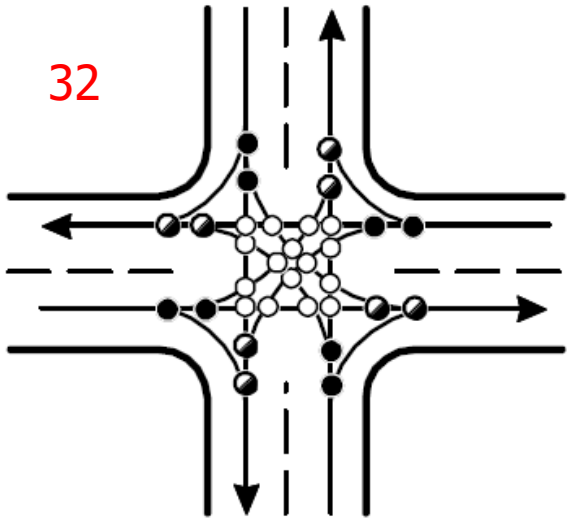

Conventional Intersection

8

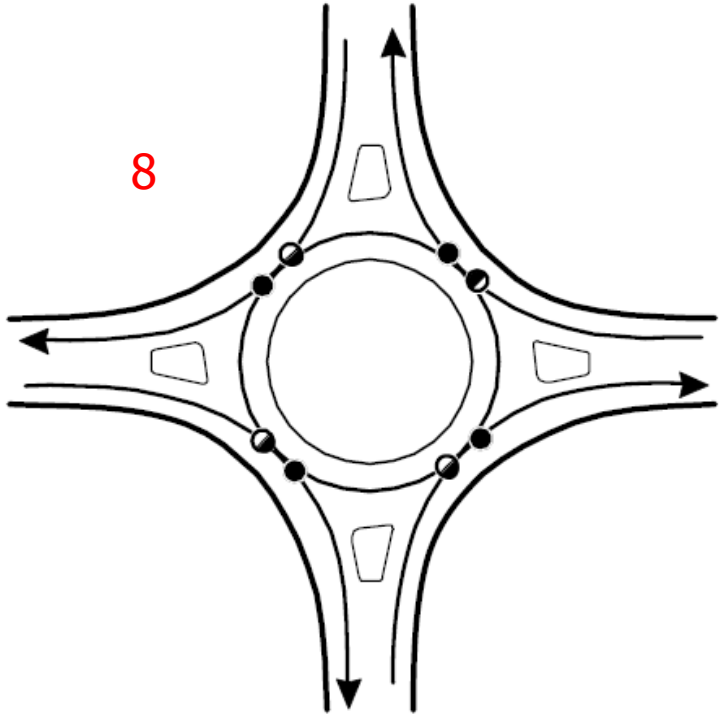

Single Lane RAB

24

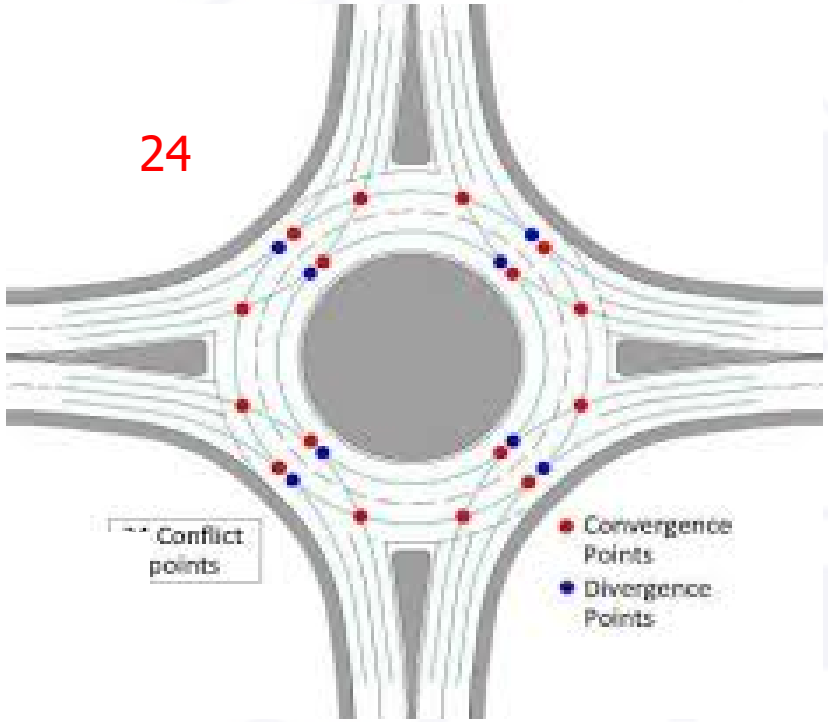

2-Lane RAB

NextLevel INDIANA

Fastest Path Criteria

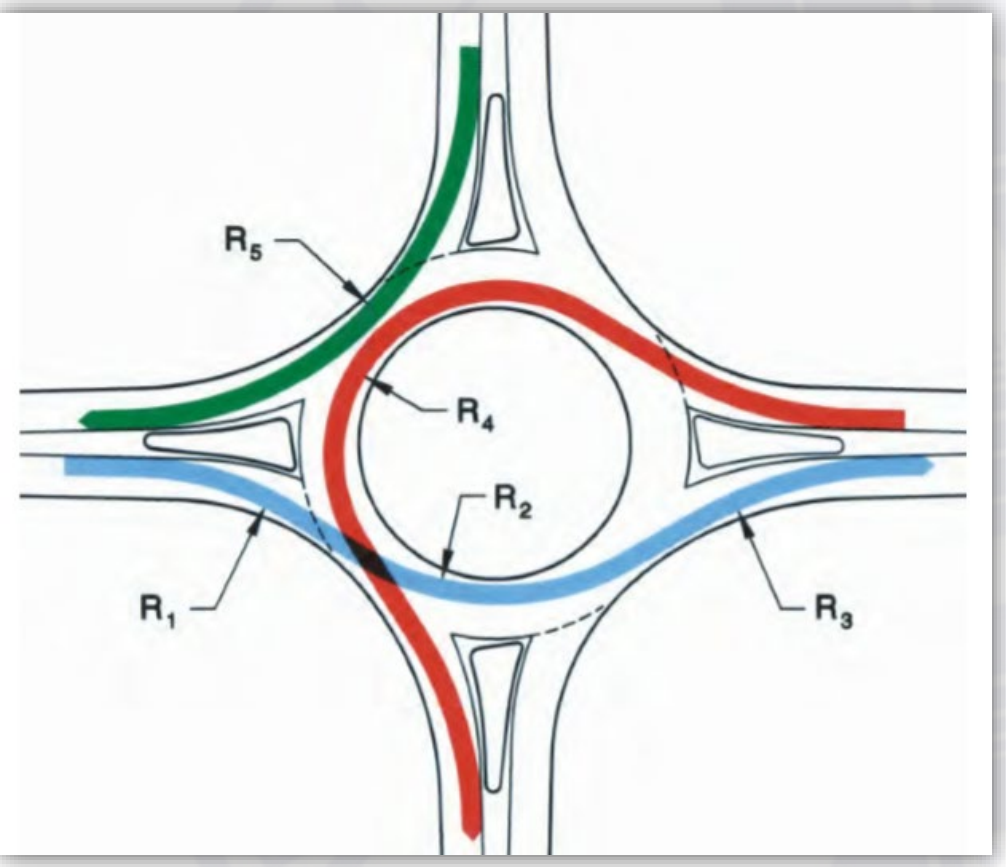

Radius	Description	Range of Speeds
Entry Path Radius, R_1	The minimum radius on the fastest through path prior to the yield line. This is not the same as *Entry Radius*.	Single-Lane 20-25 mph* Multi-lane 25-30 mph*
Circulating Path Radius, R_2	The minimum radius on the fastest through path in the exit.	15 - 20 mph
Exit Path Radius, R_3	The minimum radius on the fastest path into the exit.	R_2 + Acceleration over the path to the exit crosswalk*
Left Turn Path Radius, R_4	The minimum radius on the path of the conflicting left turn movement.	10 – 20 mph
Right Turn Path Radius, R_5	The minimum radius on the fastest path of a right turning vehicle.	15 – 20 mph

*If sufficient numbers of pedestrians are present, the desired values of fastest path should be lower.

$R_1 > R_2 < R_3$, where $R_1 < R_3$, and $R_1 > R_4$

Calculating V_3, Exit Speed

$$V_3 = \min\begin{cases} V_{3phase} \\ \frac{1}{1.47}\sqrt{(1.47V_2)^2 + 2a_{23}d_{23}} \end{cases}$$

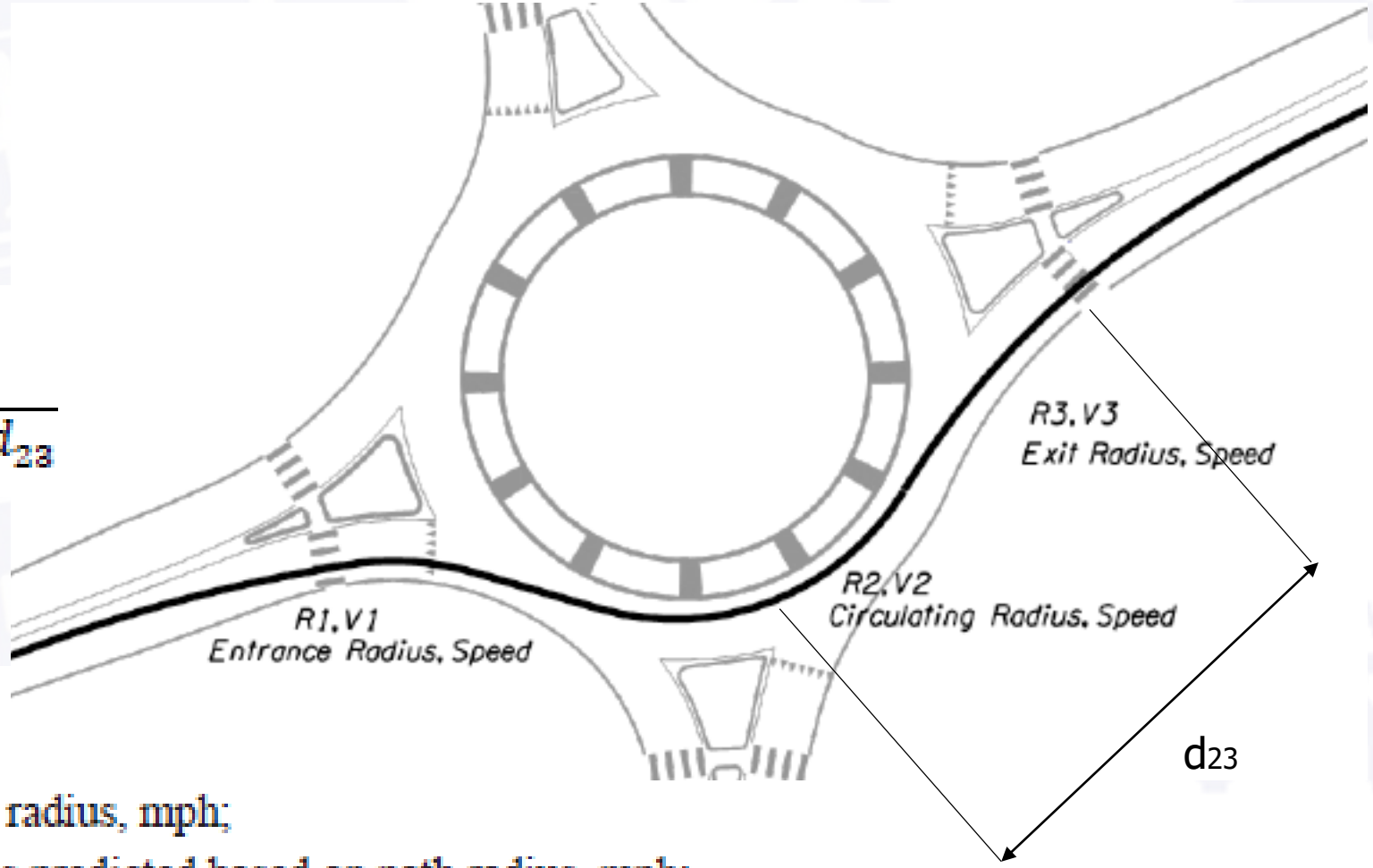

where:

V_3 = exit speed, mph;

V_{3pbase} = V_3 speed predicted based on path radius, mph;

V_2 = circulatory speed for through vehicles predicted based on path radius, mph;

a_{23} = acceleration between the midpoint of V_2 path and the point of interest along V_3 path = 6.9 ft/s^2; and

d_{23} = distance along the vehicle path between midpoint of V_2 path and point of interest along V_3 path, ft.

Yielding Approach

Non-yielding Approach

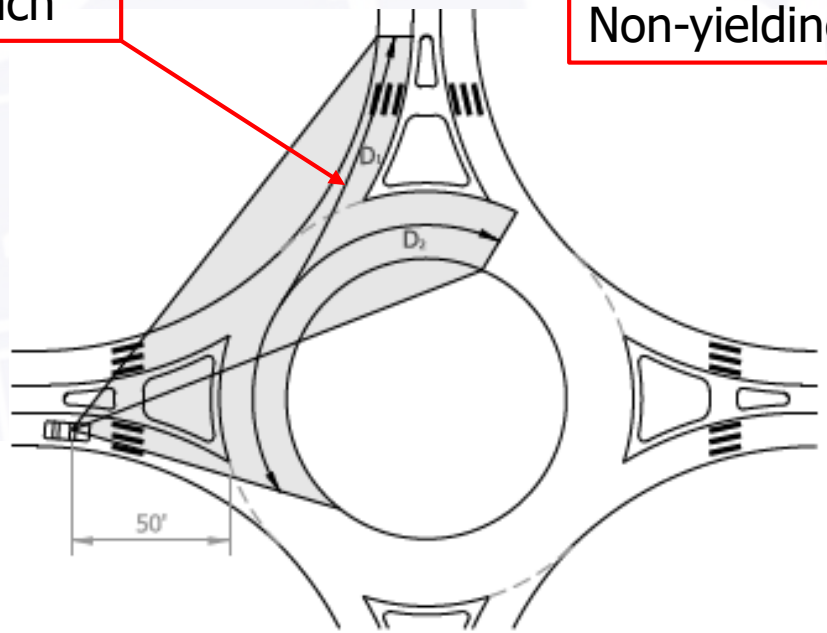

Typical RAB Configuration

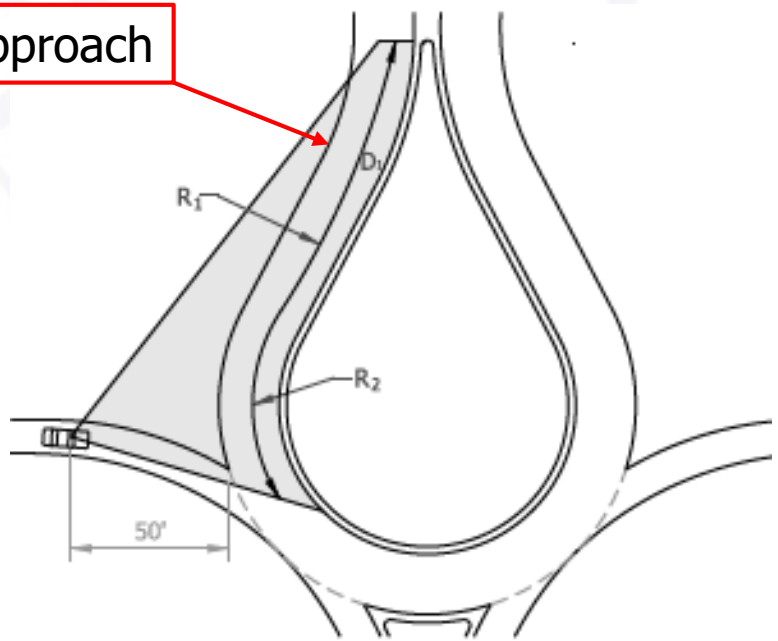

Tear Drop

$D_1 = (1.468)(V_{major,entering})(t_c)$

$D_2 = (1.468)(V_{major,circulating})(t_c)$

where:

D_1 = length of entering leg of sight distance triangle, ft
D_2 = length of circulating leg of sight distance, ft
V_{major} = design speed of conflicting movement, mph
t_c = critical headway for entering the major road, s, equal to 5.0 s
(for unyielding approaches from the left, t_c = 6.5 s)

Two conflicting traffic streams should be checked at each entry:

1. *Entering Stream,* which is composed from immediate upstream entry. The speed for this movement can be approximated by taking the average of the theoretical entering (R_1) speed and the circulating speed (R_2) speed.
2. *Circulating Stream,* which is composed of vehicles that enter the roundabout prior to the immediate upstream entry. This speed can be approximated by taking the speed of the left turning vehicles (path with radius R_4).

Intersection Sight Distance

Common Design Flaws

Common Design Flaws

1. Splitter curb offset
2. Width of approaches are wider than circulating roadway (Single lane RAB)
3. Exit speed (V3) calculated incorrectly…high exit speeds
4. Entry angle < than 20 degrees
5. Approach alignment is right of center of RAB

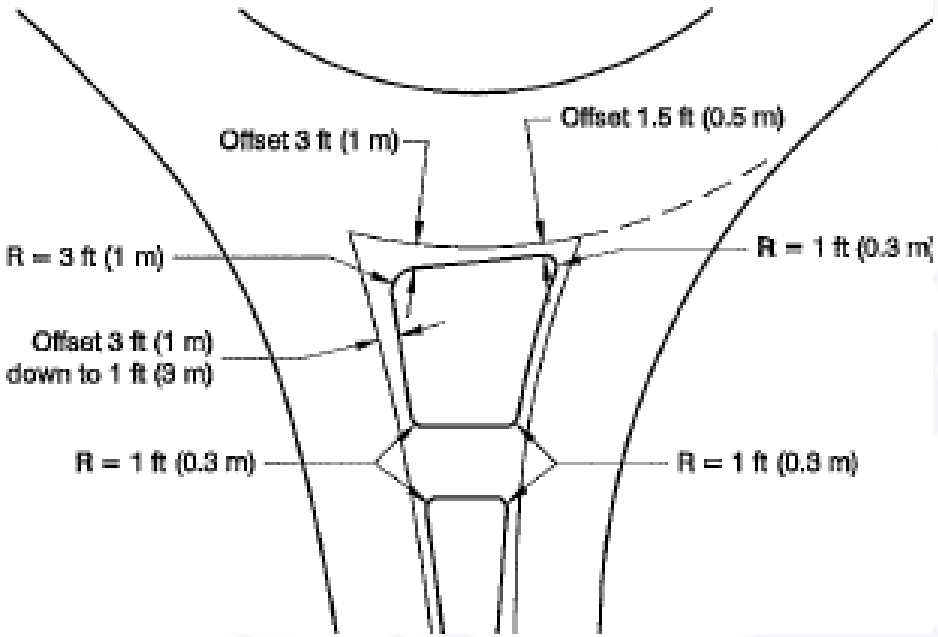

OS-OW Vehicles

OS-OW Vehicles need to be considered on State Routes.

- Inscribed diameter, curb height on center islands and truck apron widths should be carefully evaluated if OS-OW vehicles are present. A paper titled *"Low-Clearance Truck's Vertical Clearance Requirements of Roundabouts"*, by Godavarthey and Russell is a good resource for design considerations for OS-OW vehicles.
- Some low-boy trailers and large towing vehicles have issues with curb height higher than 3 inches.
- In summary the paper suggests that the maximum curb height on truck apron for single lane RABs should be no more than <u>2</u> inches, for multilane no more than <u>3</u> inches.

Journal of Transportation Technologies, 2015, 5, 214-222
Published Online October 2015 in SciRes. http://www.scirp.org/journal/jtts
http://dx.doi.org/10.4236/jtts.2015.54020

Low-Clearance Truck's Vertical Requirements at Roundabouts

Ranjit Prasad Godavarthy[1], Eugene R. Russell[2]
[1]Upper Great Plains Transportation Institute, North Dakota State University, Fargo, USA
[2]Department of Civil Engineering, Kansas State University, Manhattan, USA
Email: ranjit228@gmail.com, geno@ksu.edu

Received 14 August 2015; accepted 10 October 2015; published 13 October 2015

Copyright © 2015 by authors and Scientific Research Publishing Inc.
This work is licensed under the Creative Commons Attribution International License (CC BY).
http://creativecommons.org/licenses/by/4.0/
Open Access

Abstract

While roundabouts have already been proven to be an effective intersection treatment, there are many instances where low-clearance vehicles have problems using roundabouts. Low-clearance vehicles, such as lowboy trailer trucks, have problems, damaging the curbs and truck aprons at roundabouts when there is not sufficient ground clearance. This area has been generally neglected by designers and U.S. states. The latest roundabout manual has guidelines available to design various features of the roundabouts, but they are not specific for low-clearance vehicles. While some previous studies have identified roundabout locations with ground-clearance problems for low-boy trailers that have truck-apron heights that are greater than three inches, no published information is available about truck-apron heights based on three-dimensional analyses. This study addresses the ground-clearance problems for low-clearance vehicles at roundabouts by proposing a procedure where truck-apron heights, truck-apron slope, circulatory roadway slope, and approach roadway slope are analyzed to determine the optimum design measurements for a roundabout's vertical profile in order to accommodate low-clearance vehicles without terrain conflict. The study procedure was demonstrated on standard single-lane roundabouts and double-lane roundabouts designed according to latest roundabout guide, and recommendations were provided for truck-apron heights and the grade for various features of the roundabouts. This research can guide transportation planners and decision makers when determining the optimum roundabout vertical-profile design when low-clearance vehicles are expected. The study uses TORUS software to design roundabouts, and the AUTOTURN and AUTOTURN Pro 3D software for generating two-dimensional and three-dimensional vehicle simulations as well as for conducting three-dimensional vehicle-clearance analysis.

Keywords

Vehicle-Clearance Analysis, Truck Hang-Up Problems, Truck Apron Height, Swept Path Analysis

NextLevel INDIANA

Roundabout Design Criteria Summary

- For INDOT Facilities:
  - Minimum Inscribed Diameter:
    - Single lane: 150-ft
    - Multilane (2-lane): 180-ft
  - Minimum Circulating Roadway Width: 20-feet
  - Minimum Truck Apron Width: 12-feet.

- General Design Criteria:
  - Exit Speeds no higher than 30 mph (25 mph in school zones) at crosswalks locations.
  - R3, the exit radius is to be located ***into*** the exit as stated in the NCHRP Report 672 on page 6-53.
  - The Fastest Path Hierarchy is: R1>R2<R3, where R1<R3 and R1>R4.
  - Speed consistency between the R1, R2, R3, R4 and R5 components is a maximum of 12 mph.
  - Time gap for ISD for approaches with yielding traffic to the left t_{gap}=5 seconds.
  - Time gap for ISD for approaches with non-yielding traffic (Tear Drop Roundabout) t_{gap} = 6.5 seconds.

NextLevel INDIANA

Disclaimer: The Items discussed in this presentation are currently under review and are subject to change.

Questions?

Contact Information:
Mark Orton Standards and Policy Division
morton@indot.in.gov

NextLevel INDIANA