FHWA-Indiana Environmental Document

CATEGORICAL EXCLUSION / ENVIRONMENTAL ASSESSMENT FORM

GENERAL PROJECT INFORMATION

Road No./County:	State Road 45 and Pete Ellis Drive/Discovery Parkway; Monroe County
Designation Number(s):	1800199/1800086
Project Description/Termini:	Added turn lanes, pedestrian and bicycle accommodations along SR 45, and intersection improvements at SR 45 and Pete Ellis Drive/Discovery Parkway from the SR 46 intersection to the west to approximately 0.19 mile east of the Pete Ellis intersection, along Discovery Parkway for approximately 0.10 mile north, and along Pete Ellis Drive for approximately 0.10 mile south.

	Categorical Exclusion, Level 2 – Required Signatories: INDOT DE and/or INDOT ESD
	Categorical Exclusion, Level 3 – Required Signatories: INDOT ESD
X	**Categorical Exclusion, Level 4** – Required Signatories: INDOT ESD and FHWA
	Environmental Assessment (EA) – Required Signatories: INDOT ESD and FHWA
	Additional Investigation (AI) – The proposed action included a design change from the original approved environmental document. Required Signatories must include the appropriate environmental approval authority

Approval

INDOT DE Signature and Date

INDOT ESD Signature and Date

FHWA Signature and Date

Release for Public Involvement

N/A

INDOT DE Initials and Date

ADWP August 17, 2023

INDOT ESD Initials and Date

Certification of Public Involvement

INDOT Consultant Services Signature and Date

INDOT DE/ESD Reviewer Signature and Date:

Name and Organization of CE/EA Preparer: Heather Lacey, Crawford, Murphy & Tilly, Inc.

Part I – Public Involvement

Every Federal action requires some level of public involvement, providing for early and continuous opportunities throughout the project development process. **The level of public involvement should be commensurate with the proposed action.**

	Yes	No
Does the project have a historic bridge processed under the Historic Bridges PA*?		X
If No, then:		
Opportunity for a Public Hearing Required?	X	

**A public hearing is required for all historic bridges processed under the Historic Bridges Programmatic Agreement between INDOT, FHWA, SHPO, and the ACHP.*

Discuss what public involvement activities (legal notices, letters to affected property owners and residents (i.e. notice of entry), meetings, special purpose meetings, newspaper articles, etc.) have occurred for this project.

Notice of Entry letters were mailed to potentially affected property owners near the project area on March 15, 2019 and April 22, 2020 notifying them about the project and that individuals responsible for land surveying and field activities may be seen in the area. A sample copy of the Notice of Entry letter is included in Appendix G, page G-1.

To meet the public involvement requirements of Section 106, a legal notice of FHWA's finding of Adverse Effect was published in *The Herald Times* on October 13, 2021 offering the public an opportunity to submit comment pursuant to 36 CFR 800.2(d), 800.3(e), and 800.6(a)(4). The public comment period closed 30 days later on November 12, 2021. The text of the public notice and the affidavit of publication appear in Appendix D, pages D-138 to D-141. No comments were received.

The project will meet the minimum requirements described in the current *Indiana Department of Transportation (INDOT) Project Development Public Involvement Manual* which requires the project sponsor to offer the public an opportunity to submit comments and/or request a public hearing. Therefore, a legal notice will appear in a local publication contingent upon the release of this document for public involvement. This document will be revised after the public involvement requirements are fulfilled.

Public Controversy on Environmental Grounds

Discuss public controversy concerning community and/or natural resource impacts, including what is being done during the project to minimize impacts.

At this time, there is no substantial public controversy concerning impacts to the community or to natural resources.

Part II - General Project Identification, Description, and Design Information

Sponsor of the Project: Indiana Department of Transportation INDOT District: Seymour

Local Name of the Facility: SR 45 (10th Street) and Pete Ellis Drive/Discovery Parkway

Funding Source (*mark all that apply*): Federal [X] State [X] Local [ ] Other* [ ]

*If other is selected, please indentify the funding source: _____

PURPOSE AND NEED:

The need should describe the specific transportation problem or deficiency that the project will address. The purpose should describe the goal or objective of the project. The solution to the traffic problem should NOT be discussed in this section.

Need: The Indiana Department of Transportation has identified the need to address traffic congestion and pedestrian connectivity at the State Road 45 (SR 45) and Pete Ellis Drive/Discovery Parkway intersection and the SR 45 corridor between the SR 46 and Pete Ellis Drive/Discovery Parkway intersections in Bloomington, Monroe County, Indiana. The need for the project is supported by capacity analysis documenting future unacceptable levels of service (LOS) at the intersection, existing and future substandard LOS along the roadway corridor, and the lack of pedestrian connectivity and substandard pedestrian crosswalks.

Roadway and intersection performance is measured by LOS, which is a measure of the quality of traffic flow. LOS values can range from LOS A, which is the least congested or free flow, to LOS F, which is the most congested or breakdown flow. According to the Indiana Design Manual, the desirable LOS for the SR 45 corridor and SR 45 and Pete Ellis Drive/Discovery Parkway intersection is D or better.

According to the Engineer's Assessments in Appendix J, pages J-2 to J-82 (CMT, Des. No. 1800199 September 2019 and Des. No. 1800086 February 2021, Des. No. 1800199 addendum February 2023) for the project, although the existing SR 45 and Pete Ellis/Discovery Parkway intersection currently operates at acceptable LOS during the morning and evening peak hours, the construction of a new hospital north of the intersection along Discovery Parkway is projected to increase traffic volumes and congestion. By the design year (2043), the overall intersection will degrade to LOS F with an 89.0 second delay in the morning peak hour and a 179.8 second delay in the evening peak hour. The SR 45 corridor currently operates at an acceptable LOS D during the morning peak hours and an unacceptable LOS E during the evening peak hours. The LOS conditions will not further degrade by the design year, but the corridor will continue to provide a substandard LOS, and the new hospital to the north of the project is expected to increase traffic volumes and congestion.

Marked pedestrian crosswalks are missing at all legs of the SR 45 and Pete Ellis Drive/Discovery Parkway intersection. There is an approximately 165-foot gap in sidewalk along the north side of SR 45, immediately east of Discovery Parkway and an approximately 165-foot gap in the sidewalk along the south side of SR 45 in front of the commercial developments east of SR 46, which creates a break in sidewalk connectivity. There are also no sidewalks along the south side of SR 45, west of Pete Ellis Drive on the Hinkle Garton Farmstead property. The existing crosswalks at the SR 45 and Pete Ellis Drive/Discovery Parkway intersection lack Accessible Pedestrian Signals (APS) and not all of the existing sidewalk ramps around the intersection are Americans with Disabilities Act (ADA) compliant. Please refer to the Engineer's Assessments referenced above for details on project need.

Purpose: The purpose of this project is to reduce congestion, improve the intersection and roadway corridor to the desired LOS D or better with the design year projections, and improve pedestrian mobility and system linkage in the area of the SR 45 and Pete Ellis Drive/Discovery Parkway intersection and the SR 45 corridor between SR 46 and Pete Ellis Drive/Discovery Parkway.

PROJECT DESCRIPTION (PREFERRED ALTERNATIVE):

County: Monroe Municipality: Bloomington

Limits of Proposed Work: SR 45 from the SR 46 intersection to approximately 0.19 mile east of the Pete Ellis intersection, along Discovery Parkway for approximately 0.10 mile north, and along Pete Ellis Drive for approximately 0.10 mile south

Total Work Length: 0.75 Mile(s) Total Work Area: 9.20 Acre(s)

	Yes[1]	No
Is an Interstate Access Document (IAD)[1] required?		X
If yes, when did the FHWA provide a Determination of Engineering and Operational Acceptability?	Date:	

[1]*If an IAD is required; a copy of the approved CE/EA document must be submitted to the FHWA with a request for final approval of the IAD.*

Describe location of project including township, range, city, county, roads, etc. Existing conditions should include current conditions, current deficiencies, roadway description, surrounding features, etc. Preferred alternative should include the scope of work, anticipated impacts, and how the project will meet the Purpose and Need. Logical termini and independent utility also need discussed.

Location:
INDOT and the FHWA intend to proceed with a congestion project located along SR 45, Pete Ellis Drive, and Discovery Parkway in Bloomington, Monroe County, Indiana (Appendix B, page B-1). Some supporting documentation in the appendices may refer to North Range Road, which was the previous name of Discovery Parkway. The project is located within Sections 34 and 35, Township 9 North, Range 1 West of the 7.5-minute United States Geological Survey (USGS) Unionville, Indiana Quadrangle (Appendix B, page B-3).

Existing Conditions:
SR 45 is classified as an Urban Minor Arterial and is a FHWA National Highway System (NHS) route. Within the project area, SR 45 travels east-west and the posted speed limit is 40 miles per hour (mph). The roadway consists of one eastbound and one westbound travel lane and a dedicated center left-turn lane to the Indiana University Bloomington campus entrance and the Scholar's Quad apartment complex approximately 800 feet east of SR 46. The SR 45 approach to the intersection with SR 46 consists of a dual, 11-foot left-turn lanes, a through lane, and an 11-foot right-turn lane. Existing lane widths are 12 feet for all other lanes. A 12-foot-wide bus pad is located along the south side of SR 45, east of Pete Ellis Drive. West of the Pete Ellis Drive/Discovery Parkway intersection, there is an existing, eight-foot multi-use path located along the north side of SR 45. To the east of the intersection, there is an existing sidewalk located on both sides of SR 45, although there is an approximately 165-foot gap in sidewalk in the northeast corner of the intersection. There is also an existing sidewalk along the south side of SR 45 to the east of the SR 46 intersection, although there is an approximately 165-foot gap in the sidewalk in front of the commercial developments and the sidewalk ends at the eastern end of the Scholar's Quad apartment complex residential property, approximately 825 feet east of the SR 46 intersection. The multiple breaks in sidewalk continuity cause pedestrian mobility and system linkage concerns.

Pete Ellis Drive is classified as an Urban Minor Collector. Within the project area, Pete Ellis Drives is the south leg of the intersection with SR 45 and the posted speed limit is 25 mph. The roadway consists of one 10-foot travel lane in each direction with curb and gutter on each side. An existing sidewalk is located on both sides of Pete Ellis Drive.

Discovery Parkway, formerly known as North Range Road, is classified an Urban Local road. Within the project area, Discovery Parkway is the north leg of the intersection with SR 45 and the posted speed limit 30 mph. The roadway consists of one 10-foot travel lane in each direction with curb and gutter on each side. No sidewalks are located along Discovery Parkway

The existing SR 45 and Pete Ellis Drive/Discovery Parkway intersection is a four-legged signalized intersection. SR 45 has a shared through/left-turn lane and an exclusive right-turn lane on both the eastbound and westbound approaches. The northbound approach of Pete Ellis Drive has an exclusive right-turn lane and a shared through/left-turn lane. The southbound approach of Discovery Parkway has an exclusive left-turn lane and a shared through/right-turn lane. The current shared through and turn lanes at the four approaches cause congestion and delays at the intersection. Pedestrian accommodations at the interchange lack marked crosswalks, APS push buttons and fully ADA compliant ramps.

Bicycle accommodations are limited to the existing multi-use paths on SR 45; there are no marked bike lanes throughout the project area.

The immediate surrounding area is urban, with land use consisting primary of residential and commercial uses. There is a historical property in the southwest corner of the intersection and a new hospital is under construction approximately 0.50 mile northwest of the project area at the intersection of SR 46 and Discovery Parkway. Topography in the vicinity of the project area is generally flat, with the exception Discovery Parkway which approaches the intersection at a relatively steep vertical profile. Drainage around the SR 45 and Pete Ellis Drive/Discovery Parkway intersection flows generally northeast and drainage towards the western end of SR 45 flows generally south.

Preferred Alternative:
This project will provide exclusive left- and right-turn lanes on all approaches of the Pete Ellis Drive/Discovery Parkway intersection. SR 45 will be widened approximately 12 feet to the north in order to construct the exclusive turn lanes and bike lanes on the north and south sides. Pete Ellis Drive will be widened approximately nine feet to the west and approximately eight feet to the east in order to provide the additional pavement needed for the exclusive northbound right- and left-turn lanes. Discovery Parkway will be widened approximately 12 feet to the west in order to construct the exclusive right-turn lane. The project will also include new turn radii in all corners of the intersection, which will accommodate right and left turning movements for an intermediate semitrailer (WB-50 truck). The traffic signals will be replaced and include APS push buttons, new ADA ramps, and crosswalks.

The project will also provide an added lane in the eastbound direction of the SR 45 corridor between SR 46 and Pete Ellis

Drive/Discovery Parkway; this lane will become the new left turn lane at the Pete Ellis Drive/Discovery Parkway intersection. SR 45 will be widened 2-22 feet to the north to provide the additional pavement needed for the turn lanes and bike lanes and the lane widths will be reduced from 12 to 11 feet. The existing dedicated center left-turn lanes to the Indiana University Bloomington campus and the Scholar's Quad apartment complex will remain, but will be shifted north to accommodate the added eastbound lane.

The existing sidewalk along the east side of Pete Ellis Drive will be reconstructed as a 10-foot wide multi-use path with a five-foot offset which will tie in with the existing sidewalk along John Hinkle Place and the existing multi-use path that continues south along the east side Pete Ellis Drive. The existing 8-foot wide multi-use path along the north side of SR 45, west of Pete Ellis Drive/Discovery Parkway will be reconstructed with a 5-foot offset from the roadway and the sidewalk along the north side of SR 45, east of Pete Ellis Drive/Discovery Parkway will be reconstructed and extended to Discovery Parkway as a 5-foot wide sidewalk with a 5-foot offset from the roadway. A new 5-foot wide sidewalk will be constructed along the south side of SR 45, west of Pete Ellis Drive/Discovery Parkway and will tie into the existing sidewalks. A short section of the existing sidewalk will be reconstructed along the south side of SR 45, east of the SR 46 intersection in front of the commercial buildings, in order to accommodate the widening on the south side of SR 45. An eastbound and westbound 5-foot wide bike lane will be marked along SR 45 from SR 46 through the Pete Ellis Drive/Discovery Parkway intersection. East of Pete Ellis Drive, the eastbound bike lane will be located between the eastbound travel lane and the bus pad; the bike lane will merge with the eastbound travel lane once it passes the bus pad. The proposed improvements are shown on the plan sheets included in Appendix B, pages B-19 to B-41.

The maintenance of traffic (MOT) for the project will involve the implementation of phased construction and road closures along Pete Ellis Drive and Discovery Parkway with posted detours. For the widening of SR 45, the project will implement a phased construction and widening in order to allow for one lane of traffic in each direction and avoid full closure of SR 45. Refer to the MOT section of this document and the plan sheets (Appendix B, pages B-42 to B-74) for details.

The preferred alternative will meet the purpose and need for the project by reducing congestion at the intersection, improving the intersection and roadway corridor to the desired LOS D or better with the design year projections, and improving pedestrian mobility and system linkage by creating a connection between existing sidewalks, providing new multi-use paths and bike lanes, and providing APS push buttons and ADA ramps. The improved capacity will also accommodate the projected traffic growth from the hospital development. The westbound and southbound approaches to the intersection in the morning and evening peak hours are projected to be LOS C, the northbound approach is projected to be LOS D, and the eastbound approach is projected to be LOS A. The eastbound and westbound corridor lanes are projected to be LOS A in the morning peak hours and LOS B in the evening peak hours. Coupled with the lowest amount of right-of-way and minimized impacts to the south side of SR 45 and a historic resource, this is the preferred alternative.

Logical Termini/Independent Utility:
The project extends along SR 45 from SR 46 to 0.19 mile east of the intersection with Pete Ellis Drive/Discovery Parkway. The project also extends along Pete Ellis Drive 0.10 mile to the south and along Discovery Parkway 0.10 mile to the north. These logical termini were established based on the limits of the necessary work to accommodate the improvements to the intersection. The project is not dependent on any other future projects to meet the project purpose and need, and therefore exhibits independent utility.

Please refer to Appendix B for maps depicting the project area (pages B-1 to B-3), photographs of the project area (pages B-5 to B-18) and plan sheets (pages B-19 to B-74).

OTHER ALTERNATIVES CONSIDERED:

Provide a header for each alternative. Describe all discarded alternatives, including the No Build Alternative. Explain why each discarded alternative was not selected. Make sure to state how each alternative meets or does not meet the Purpose and Need and why.

No Build Alternative
The No Build alternative has no cost and involves no action in the project area. SR 45 would remain a signal-controlled intersection with Pete Ellis Drive/Discovery Parkway with shared turn- and thru-lanes. SR 45 between SR 46 and Pete Ellis Drive/Discovery Parkway would remain a two-lane roadway. The pedestrian accommodations would continue to have missing links and crosswalks would remain substandard. This alternative does not address the purpose and need to reduce congestion and improve pedestrian mobility and system linkage. Since this alternative would not fulfill the purpose and need, it was eliminated from further consideration.

Added Turn Lanes Alternative; Shifted to Minimize Utility Impacts
Similar to the preferred alternative, this alternative would provide exclusive left-turn lanes and right-turn lanes on all approaches to

the intersection, but adjusts the lane widening to minimize relocations of the existing utilities in the northeast corner of the intersection. SR 45 would be widened 12 feet to the north in order to construct the additional turn lanes. To avoid the existing above ground utilities in the northeast corner of the intersection, the turning radius would be adjusted west, which shifts the lanes on Pete Ellis Drive to the west as well. Pete Ellis Drive would be widened 13.5 feet to the west side to avoid having negative offset opposing left-turn lanes. A 10-foot wide multi-use path with a five-foot buffer will be provided along the west side of Pete Ellis Drive connecting into the existing sidewalk on John Hinkle Place. Discovery Parkway would be widened 18 feet to the west to allow for a WB-50 truck to make a westbound right-turn and encroach no more than 1 foot into the southbound left-turn lane. The project would also include new turn radii in all corners of the intersection. Similar to the preferred alternative, the project would also provide an added lane in both the eastbound and westbound directions along SR 45 between SR 46 and Pete Ellis Drive/Discovery Parkway and sidewalk would be constructed along the south side of SR 45 from the intersection of SR 45 at SR 46 to the existing sidewalk in front of the commercial buildings and the Scholar's Quad apartment complex. The traffic signals at the SR 45 and Pete Ellis Drive/Discovery Parkway intersection would be replaced and include APS push buttons to accommodate new ADA ramps and crosswalks. This alternative would avoid impacts to existing utilities in the northeast corner of the intersection and would meet the purpose and need for the project by reducing congestion and improving pedestrian mobility and system linkage in the area of the intersection. However, this alternative would likely have a large impact on the historic property in the southwest corner of the intersection. Since this alternative could significantly impact a historic resource, this alternative was eliminated from consideration.

Multi-Lane Roundabout Alternative
This alternative would convert the existing signalized intersection into a dual-lane roundabout with dual-lane entry on all approaches. The roundabout would be shifted to the north of the existing SR 45 alignment, which would result in minimal impacts to the southeast and southwest corners of the intersection. Similar to the preferred alternative, the project would also provide an added lane in both the eastbound and westbound directions along SR 45 between SR 46 and Pete Ellis Drive/Discovery Parkway and sidewalk would be constructed along the south side of SR 45 from the intersection of SR 45 at SR 46 to the existing sidewalk in front of the commercial buildings and the Scholar's Quad apartment complex. This alternative would minimize impacts to the historic property in the southwest corner and the federal post office on government property in the southeast corner of the intersection and meet the purpose and need for the project by reducing congestion and improving pedestrian mobility and system linkage in the area of the intersection. However, this alternative would likely have significant impact on existing utilities and would require the most ROW acquisition. Since this alternative would require the most ROW, have significant impacts to the north-adjacent properties, and have the highest cost, this alternative was eliminated from consideration.

Two additional alternatives, in addition to the preferred alternative and these dismissed alternatives, were considered which completely avoided ROW take from the historic property and are fully discussed in *Section E – Section 4(f) Resources/ Section 6(f) Resources*.

No other alternatives were considered.

The No Build Alternative is not feasible, prudent or practicable because (*Mark all that apply*):

It would not correct existing capacity deficiencies;	X
It would not correct existing safety hazards;	
It would not correct the existing roadway geometric deficiencies;	
It would not correct existing deteriorated conditions and maintenance problems; or	
It would result in serious impacts to the motoring public and general welfare of the economy.	
Other (Describe): It would not improve existing pedestrian continuity deficiencies.	X

ROADWAY CHARACTER:

If the proposed action includes multiple roadways, complete and duplicate for each roadway.

Name of Roadway: SR 45 (at intersection with Pete Ellis Drive/Discovery Parkway)
Functional Classification: Urban Minor Arterial
Current ADT: 12,400 VPD (2018) Design Year ADT: 16,000 VPD (2043)
Design Hour Volume (DHV): 1,800 Truck Percentage (%) 4.7
Designed Speed (mph): 40 Legal Speed (mph): 40

	Existing		Proposed	
Number of Lanes:	3		4	
Type of Lanes:	1 EB through, 1 WB through, 1 RTL		1 EB through, 1 WB through, 1 RTL, 1 LTL	
Pavement Width:	12	ft.	11	ft.
Shoulder Width:	0-2	ft.	0	ft.
Median Width:	N/A	ft.	N/A	ft.
Sidewalk Width:	5-8	ft.	5-10	ft.

Setting:	X	Urban		Suburban		Rural
Topography:	X	Level		Rolling		Hilly

Name of Roadway: SR 45 (near Indiana University Bloomington campus entrance)
Functional Classification: Urban Minor Arterial
Current ADT: 12,400 VPD (2018) Design Year ADT: 16,000 VPD (2043)
Design Hour Volume (DHV): 1,800 Truck Percentage (%) 4.7
Designed Speed (mph): 40 Legal Speed (mph): 40

	Existing		Proposed	
Number of Lanes:	3		4	
Type of Lanes:	1 EB through, 1 WB through, 1 center LTL		2 EB through, 1 WB through, 1 center LTL	
Pavement Width:	12	ft.	11	ft.
Shoulder Width:	0-1	ft.	0	ft.
Median Width:	0-13	ft.	0-12	ft.
Sidewalk Width:	5-8	ft.	5-8	ft.

Setting:	X	Urban		Suburban		Rural
Topography:	X	Level		Rolling		Hilly

Indiana Department of Transportation

County: Monroe | Route: SR 45 and Pete Ellis Dr./Discovery Pkwy. | Des. No. 1800199/1800086

Name of Roadway: Pete Ellis Drive
Functional Classification: Urban Minor Collector
Current ADT: 3,100 VPD (2018) Design Year ADT: 5,000 VPD (2043)
Design Hour Volume (DHV): 390 Truck Percentage (%) 2.0
Designed Speed (mph): 30 Legal Speed (mph): 25

	Existing		Proposed	
Number of Lanes:	3		4	
Type of Lanes:	1 NB through/LTL, 1 RTL, 1 SB through		1 NB through, 1 SB through, 1 RTL, 1 LTL	
Pavement Width:	10-12	ft.	11	ft.
Shoulder Width:	0	ft.	0	ft.
Median Width:	N/A	ft.	N/A	ft.
Sidewalk Width:	5	ft.	5-10	ft.

Setting:	X	Urban		Suburban		Rural
Topography:	X	Level		Rolling		Hilly

Name of Roadway: Discovery Parkway
Functional Classification: Urban Local
Current ADT: 1,900 VPD (2018) Design Year ADT: 3,000 VPD (2043)
Design Hour Volume (DHV): 590 Truck Percentage (%) 3.5
Designed Speed (mph): 35 Legal Speed (mph): 30

	Existing		Proposed	
Number of Lanes:	3		4	
Type of Lanes:	1 NB through, 1 SB through/RTL, 1 LTL		1 NB through, 1 SB through, 1 RTL, 1 LTL	
Pavement Width:	10	ft.	10	ft.
Shoulder Width:	0	ft.	0	ft.
Median Width:	N/A	ft.	N/A	ft.
Sidewalk Width:	N/A	ft.	N/A	ft.

Setting:	X	Urban		Suburban		Rural
Topography:	X	Level		Rolling		Hilly

BRIDGES AND/OR SMALL STRUCTURE(S):

If the proposed action includes multiple structures, complete and duplicate for each bridge and/or small structure. Include both existing and proposed bridge(s) and/or small structure(s) in this section.

Structure/NBI Number(s): N/A Sufficiency Rating: N/A
(Rating, Source of Information)

	Existing		Proposed	
Bridge/Structure Type:				
Number of Spans:				
Weight Restrictions:		ton		ton
Height Restrictions:		ft.		ft.
Curb to Curb Width:		ft.		ft.
Outside to Outside Width:		ft.		ft.
Shoulder Width:		ft.		ft.

Describe impacts and work involving bridge(s), culvert(s), pipe(s), and small structure(s). Provide details for small structure(s): structure number, type, size (length and dia.), location and impacts to water. Use a table if the number of small structures becomes large. If the table exceeds a complete page, put it in the appendix and summarize the information below with a citation to the table.

No bridges or small structures are located within the project area.

MAINTENANCE OF TRAFFIC (MOT) DURING CONSTRUCTION:

	Yes	No
Is a temporary bridge proposed?		X
Is a temporary roadway proposed?		X
Will the project involve the use of a detour or require a ramp closure? (describe below)	X	
Provisions will be made for access by local traffic and so posted.	X	
Provisions will be made for through-traffic dependent businesses.	X	
Provisions will be made to accommodate any local special events or festivals.	X	
Will the proposed MOT substantially change the environmental consequences of the action?		X
Is there substantial controversy associated with the proposed method for MOT?		X

Discuss closures and/or facilities (if any) that will be provided for maintenance of traffic. Any known impacts from these temporary measures should be quantified to the extent possible, particularly with respect to properties such as Section 4(f) resources and wetlands. Any local concerns about access and traffic flow should be detailed as well.

The MOT for Des. No. 1800199 project will require temporary lane closures along SR 45 and temporary closure of Pete Ellis Drive and Discovery Parkway with detours. Construction of the improvements along SR 45 will require phased, temporary closure of the eastbound and westbound travel lanes, but one lane of travel will be maintained in each direction on SR 45 through the use of temporary widening and lane shifts. During the first stage of construction, Discovery Parkway will be closed to through traffic and motorists will use SR 45, East State Road 46 Bypass, and Discovery Parkway for the detour. The added travel distance as a result of the detour is approximately 0.8 mile. The detour is expected to last approximately two months. During the second stage of construction, Pete Ellis Drive will be closed to through traffic and motorists will use SR 45, East Stage Road 46 Bypass, and SR 46. The added travel distance as a result of the detour is approximately 0.6 mile. The detour is expected to last approximately two months.

The MOT for Des. No. 1800086 project will require temporary lane closures of the eastbound and westbound travel lanes, but one lane of travel will be maintained in each direction on SR 45 through the use of temporary lane shifts.

Access to all properties shall be maintained during both construction periods. Pedestrian access will be maintained during construction though phased construction of sidewalks, temporary pavement, and posted detours. Please see Appendix B (pages B-42 to B-74) for MOT details.

The closures/lane restrictions will pose a temporary inconvenience to traveling motorists (including school buses and emergency services); however, no significant delays are anticipated, and all inconveniences and delays will cease upon project completion.

ESTIMATED PROJECT COST AND SCHEDULE:

Des. No. 1800199 SR 45 & Pete Ellis Drive/Discover Parkway Intersection Improvements

Engineering: $ 500,000 (2020) Right-of-Way: $ Construction: $ 7,134,149 (2025)

Anticipated Start Date of Construction: November 2024

Des. No. 1800086 SR 45 Added Lanes

Engineering: $ 500,000 (2021) Right-of-Way: $ 250,000 (2023) Construction: $ 2,650,000 (2026)

Anticipated Start Date of Construction: November 2024

RIGHT OF WAY:

	Amount (acres)	
Land Use Impacts	Permanent	Temporary
Residential (apartment complexes)	0.65	0.24
Commercial	0.09	0.17
Agricultural	0	0
Forest	0	0
Wetlands	0	0
Other: Indiana University Bloomington Campus	3.03	0.14
Other: Hinkle Garton Farmstead	0.41	0.15
TOTAL	4.18	0.70

Describe both Permanent and Temporary right-of-way and describe their current use. Typical and Maximum right-of-way widths (existing and proposed) should also be discussed. Any advance acquisition, reacquisition or easements, either known or suspected, and their impacts on the environmental analysis should be discussed.

The existing ROW along SR 45, east of the intersection, is typically approximately 76 feet wide, with a maximum of approximately 100 feet wide. The existing ROW along SR 45, west of the intersection, is typically approximately 100 feet wide, with a maximum of approximately 130 feet wide; the ROW width includes the existing Perpetual Highway Easement on the north side of SR 45 on the Indiana University Bloomington Campus property. The proposed permanent ROW on SR 45, east of the intersection, will typically be approximately 100 feet wide, with a maximum of approximately 120 feet wide. The proposed permanent ROW on SR 45, west of the intersection, will typically be approximately 100 feet wide, with a maximum of approximately 140 feet wide; the existing Perpetual Highway Easement on the north side of SR 45, on the Indiana University Bloomington Campus property, will be incorporated as permanent ROW. The existing ROW along Discovery Parkway is typically approximately 46 feet wide, with a maximum of approximately 67 feet wide. The proposed permanent ROW on Discovery Parkway will typically be approximately 56 feet wide, with a maximum of approximately 70 feet wide. The existing ROW along Pete Ellis Drive is typically approximately 103 feet wide, with a maximum of approximately 106 feet wide. The proposed ROW widths along Pete Ellis Drive will not change, with exception to immediately around the intersection. The reported ROW width is measured as the entire width of the roadway ROW.

The project requires approximately 4.18 acres of permanent ROW to construct the proposed improvements to roadways, sidewalks, multi-use paths and property access. This includes approximately 0.65 acre from residential apartment properties in the northeast corner of the intersection and along the south side of SR 45 between SR 46 and Pete Ellis Drive; approximately 0.06 acre from the commercial property in the southeast corner of the SR 45 and SR 46 intersection; approximately 0.03 acre from the US Postal Service property in the southeast corner of the intersection; approximately 3.03 acres from the Indiana University Bloomington campus along the north side of SR 45 between SR 46 and Discovery Parkway and along the west side of Discovery Parkway, which includes approximately 3.03 acres from the existing Perpetual Highway Easement on the property; and approximately 0.40 acre from the Hinkle Garton Farmstead historic property in the southwest corner of the intersection. The project also requires approximately 0.70 acre of temporary ROW. This includes approximately 0.24 acre from residential apartment properties in the northeast corner of the intersection and along the south side of SR 45 between SR 46 and Pete Ellis Drive; approximately 0.11 acre from the commercial property in the southeast corner of the SR 45 and SR 46 intersection; approximately 0.06 acre from the US Postal Service property in the southeast corner of the intersection; approximately 0.14 acre from the Indiana University Bloomington

campus along the north side of SR 45 between SR 46 and Discovery Parkway and along the west side of Discovery Parkway; and approximately 0.15 acre from the Hinkle Garton Farmstead historic property in the southwest corner of the intersection.

If the scope of work or permanent or temporary right-of-way amounts change, the INDOT Environmental Services Division (ESD) and the INDOT District Environmental Section will be contacted immediately.

ROW acquisition for both Des. No.s are in progress. See Section F – Air Quality, STIP/TIP for funding details.

Part III – Identification and Evaluation of Impacts of the Proposed Action

SECTION A - EARLY COORDINATION:

List the date(s) coordination was sent and all resource agencies that were contacted as a part of the development of this Environmental Study. Also, include the date of their response or indicate that no response was received.

Early coordination letters were sent on August 5, 2019 for Des. No. 1800199 and December 15, 2020 for Des. No. 1800086 (Appendix C, pages C-1 to C-11).

Agency	Date Sent	Date Response Received	Appendix
Indiana Geological Survey (IGS)	8/5/2019; 12/15/2020	8/5/2019; 12/15/2020	Appendix C, pages C-28 to C-33
Indiana Department of Environmental Management (IDEM)	8/5/2019; 12/15/2020	8/5/2019; 12/15/2020	Appendix C, pages C-12 to C-25
US Fish and Wildlife Service (USFWS) - Bloomington Field Office	8/5/2019	8/6/2019	Appendix C, pages C-34 to C-35
INDOT - Office of Communication	8/5/2019; 12/15/2020	None received	N/A
INDOT – Office of Public Hearings	8/5/2019	8/5/2019	Appendix C, page C-38
Housing and Urban Development (HUD) - Chicago Regional Environmental Officer	8/5/2019; 12/15/2020	None received	N/A
Indiana Department of Natural Resources - Division of Fish and Wildlife (IDNR-DFW)	8/5/2019; 12/15/2020	9/4/2019; 1/13/2021	Appendix C, pages C-26 to C-27
IDEM - Groundwater Section, Drinking Water Branch	8/5/2019	9/5/2019	Appendix C, page C-37
US Department of Agriculture - Natural Resource Conservation Service (NRCS)	8/5/2019	9/16/2019	Appendix C, page C-36
US Army Corp of Engineers (USACE) - Louisville District	8/5/2019	None received	N/A
US Forest Service - Hoosier National Forest	8/5/2019; 12/15/2020	None received	N/A
Bloomington-Monroe County Metropolitan Planning Organization (BMC MPO)	8/5/2019; 12/15/2020	12/16/202	Appendix C, pages C-58 to C-59
Bloomington Mayor	8/5/2019; 12/15/2020	None received	N/A
Bloomington City Council	8/5/2019; 12/15/2020	8/27/2019	Appendix C, pages C-39 to C-50
Bloomington Police Department	8/5/2019; 12/15/2020	None received	N/A

Bloomington Fire Department	8/5/2019; 12/15/2020	None received	N/A
Bloomington Department of Planning & Transportation	8/5/2019; 12/15/2020	None received	N/A
Bloomington Parks & Recreation Department	8/5/2019; 7/17/2020	7/17/2020	Appendix C, pages C-51 to C-52
Monroe County Sheriff	8/5/2019; 12/15/2020	None received	N/A
Monroe County Council	8/5/2019; 12/15/2020	None received	N/A
Monroe County Surveyor	8/5/2019; 12/15/2020	None received	N/A
Monroe County Planning Department	8/5/2019; 12/15/2020	None received	N/A
Monroe County Commissioners	8/5/2019; 12/15/2020	None received	N/A
Monroe County Emergency Management Office	8/5/2019; 12/15/2020	None received	N/A
Monroe County Highway Department	8/5/2019; 12/15/2020	None received	N/A
Monroe County Community School Corporation Superintendent	8/5/2019; 12/15/2020	None received	N/A
Monroe County Community School Corporation Transportation Director	8/5/2019; 12/15/2020	8/19/2019; 1/19/2021	Appendix C, pages C-53 to C-54
Bloomington Transit	8/5/2019; 12/15/2020	12/15/2020	Appendix C, pages C-55 to C-57
Indiana University Bloomington Police Department	8/5/2019; 12/15/2020	None received	N/A
Indiana University Bloomington Office of the President	8/5/2019; 12/15/2020	None received	N/A
Indiana University Bloomington MS4 Coordinator	8/5/2019; 12/15/2020	None received	N/A
City of Bloomington MS4 Coordinator	8/5/2019; 12/15/2020	None received	N/A
Monroe County MS4 Coordinator	8/5/2019; 12/15/2020	12/15/2020	Appendix C, page C-60
Monroe County Health Administrator	12/15/2020; 12/15/2020	None received	N/A
Indiana University Health Director South Central Region	12/16/2020	None received	N/A

All applicable recommendations are included in the Environmental Commitments section of this CE document.

SECTION B – ECOLOGICAL RESOURCES:

	Presence	Impacts Yes	Impacts No
Streams, Rivers, Watercourses & Other Jurisdictional Features			
Federal Wild and Scenic Rivers			
State Natural, Scenic or Recreational Rivers			
Nationwide Rivers Inventory (NRI) listed			
Outstanding Rivers List for Indiana			
Navigable Waterways			

Total stream(s) in project area: N/A Linear feet Total impacted stream(s): N/A Linear feet

Stream Name	Classification	Total Size in Project Area (linear feet)	Impacted linear feet	Comments (i.e. location, flow direction, likely Water of the US, appendix reference)
N/A				

Describe all streams, rivers, watercourses and other jurisdictional features adjacent or within the project area. Include whether or not impacts (both permanent and temporary) will occur to the features identified. Include if the streams or rivers are listed on any federal or state lists for Indiana. Include if features are subject to federal or state jurisdiction. Discuss measures to avoid, minimize, and mitigate if impacts will occur.

Based on the desktop review, the aerial map of the project area, and the RFI reports (Appendix E, pages E-1 to E-25) there are four (4) streams, rivers, watercourse, or other jurisdictional features within the 0.5 mile search radius. There are no streams, rivers, watercourse, or other jurisdictional features within or adjacent to the project area, which was confirmed by the site visits on July 24, 2019 and May 4, 2020 by Crawford, Murphy & Tilly, Inc. (CMT). Therefore, no impacts are expected.

A *Waters of the U.S. Determination / Wetland Delineation Report* was approved by INDOT Ecology and Waterway Permitting Office on June 16, 2020 and January 12, 2021. Please refer to Appendix F, pages F-1 to F-12 and F-14 to F-24 for the *Waters of the U.S. Determination / Wetland Delineation Reports*. It was determined that no Waters of the United States, including streams, rivers, watercourse or jurisdictional ditches, were identified within the project area. USACE makes all final determinations regarding jurisdiction.

	Presence	Impacts Yes	Impacts No
Open Water Feature(s)			
Reservoirs			
Lakes			
Farm Ponds			
Retention/Detention Basin			
Storm Water Management Facilities			
Other: _____			

Describe all open water feature(s) identified adjacent or within the project area. Include whether or not impacts (both permanent and temporary) will occur to the features identified. Include if features are subject to federal or state jurisdiction. Discuss measures to avoid, minimize, and mitigate if impacts will occur.

Based on the desktop review, the aerial map of the project area, and the RFI reports (Appendix E, pages E-1 to E-25) there is one (1) open water feature within the 0.5 mile search radius. That number was confirmed by the site visits on July 24, 2019 and May 4, 2020 by CMT. Because the open water feature is located outside of the project area, no direct or indirect impacts are expected.

A *Waters of the U.S. Determination / Wetland Delineation Report* was approved by INDOT Ecology and Waterway Permitting Office on June 16, 2020 and January 12, 2021. Please refer to Appendix F, pages F-1 to F-12 and F-14 to F-24 for the *Waters of the U.S. Determination / Wetland Delineation Reports*. It was determined that no open water features were identified within the project area.

Indiana Department of Transportation

County Monroe Route SR 45 and Pete Ellis Dr./Discovery Pkwy. Des. No. 1800199/1800086

	Presence	Impacts Yes	Impacts No
Wetlands			

Total wetland area: N/A Acre(s) Total wetland area impacted: N/A Acre(s)

(If a determination has not been made for non-isolated/isolated wetlands, fill in the total wetland area impacted above.)

Wetland No.	Classification	Total Size (Acres)	Impacted Acres	Comments (i.e. location, likely Water of the US, appendix reference)
N/A				

Wetlands (*Mark all that apply*)	Documentation	ESD Approval Dates
Wetland Determination	X	June 16, 2020; January 12, 2021
Wetland Delineation		
USACE Isolated Waters Determination		

Improvements that will not result in any wetland impacts are not practicable because such avoidance would result in (Mark all that apply and explain):

- Substantial adverse impacts to adjacent homes, business or other improved properties; ☐
- Substantially increased project costs; ☐
- Unique engineering, traffic, maintenance, or safety problems; ☐
- Substantial adverse social, economic, or environmental impacts, or ☐
- The project not meeting the identified needs. ☐

Describe all wetlands identified adjacent or within the project area. Include whether or not impacts (both permanent and temporary) will occur to the features identified. Include if features are subject to federal or state jurisdiction. Discuss measures to avoid, minimize, and mitigate if impacts will occur.

Based on the desktop review, the aerial map of the project area, and the RFI reports (Appendix E, pages E-1 to E-25) there are five (5) wetlands within the 0.5 mile search radius. There are no wetlands within or adjacent to the project area, which was confirmed by the site visits on July 24, 2019 and May 4, 2020 by CMT. Therefore, no impacts are expected.

A *Waters of the U.S. Determination / Wetland Delineation Report* was approved by INDOT Ecology and Waterway Permitting Office on June 16, 2020 and January 12, 2021. Please refer to Appendix F, pages F-1 to F-12 and F-14 to F-24 for the *Waters of the U.S. Determination / Wetland Delineation Reports*. It was determined that no Waters of the United States, including wetlands, were identified within the project area.

	Presence	Impacts Yes	Impacts No
Terrestrial Habitat	X	X	

Total terrestrial habitat in project area: 3.88 Acre(s) Total tree clearing: 2.2 Acre(s)

Describe types of terrestrial habitat (i.e. forested, grassland, farmland, lawn, etc.) adjacent or within the project area. Include whether or not impacts will occur to habitat identified. Include total terrestrial habitat impacted and total tree clearing that will occur. Discuss measure to avoid, minimize, and mitigate if impacts will occur.

Based on a desktop review, a site visit on July 24, 2019 and May 4, 2020 by Crawford, Murphy & Tilly, Inc. (CMT), the aerial map of the project area (Appendix B, page B-2), there is mowed grass/lawn and lightly forested habitat within the project area. The area is urban with mixed residential and commercial land uses. Mowed grass/lawn is the predominant vegetative community type in the project area. Approximately 1.96 acre of mowed grass/lawn containing common turf grasses, including fowl blue grass (*Poa palustris*) and narrowleaf plantain (*Plantago lanceolata*), will be directly impacted for the intersection and roadway improvements. Approximately 40 trees (approximately 2.2 acres) are expected to be removed throughout the project area as a result of the project. Efforts were made to avoid and minimize terrestrial habitat impacts to the greatest extent possible. The construction of this project will cause minimal terrestrial habitat disturbance. Avoidance alternatives are not practicable because they would not allow the project to address the existing congestion, pedestrian mobility, and system linkage concerns, and therefore would not fulfill the project's purpose and need. Mitigation is not anticipated for this project.

IDNR-DFW responded on August 5, 2019 and January 13, 2021 with recommendations to avoid, minimize, or compensate for impacts to fish, wildlife, and botanical resources, including mitigating for tree removal and revegetating all bare and disturbed areas (Appendix C, page C-26 to C-27). USFWS responded on August 6, 2019 with standard recommendations to avoid or minimize impacts to fish, wildlife, and wildlife habitats, including restricting clearing of trees and vegetation outside of the construction limits (Appendix C, pages C-34 to C-35). IDEM's general comments in their automated responses on August 5, 2019 and December 15, 2020 require permitting if there is more than one acre of total land area disturbance (Appendix C, pages C-12 to C-25). All applicable recommendations are included in the Environmental Commitments section of this CE document.

Protected Species

Federally Listed Bats	Yes	No
Information for Planning and Consultation (IPaC) determination key completed	X	
Section 7 informal consultation completed (IPaC cannot be completed)		X
Section 7 formal consultation Biological Assessment (BA) required		X

Determination Received for Listed Bats from USFWS: NE [ ] NLAA [X] LAA [ ]

Other Species not included in IPaC	Yes	No
Additional federal species found in project area (based on IPaC species list)	X	
State species (not bird) found in project area (based upon consultation with IDNR)		X

Migratory Birds	Yes	No
Known usage or presence of birds (i.e. nests)		X
State bird species based upon coordination with IDNR		X

Discuss IDNR coordination and species identified. Describe USFWS Section 7 consultation and determination received for Indiana bat and northern long-eared bat impacts. Discuss if other federally listed species were identified. If so, include consultation that has occurred and the determination that was received. Discuss if migratory birds have been observed and any impacts.

Based on a desktop review and the RFI reports (Appendix E, pages E-1 to E-25), completed by CMT on October 2, 2019, and March 17, 2021, the IDNR Monroe County Endangered, Threatened and Rare (ETR) Species List has been checked. According to the IDNR-DFW early coordination response letters dated September 4, 2019 and January 13, 2021, the Natural Heritage Program's Database has been checked and no plant or animal species listed as state or federally threatened, endangered, or rare have been reported to occur in the project vicinity. In addition, IDNR-DFW responded with recommendations to avoid, minimize, or

compensate for impacts to fish, wildlife, and botanical resources (Appendix C, pages C-26 and C-27). All applicable recommendations are included in the Environmental Commitments section of this CE document.

Indiana Bat and Northern Long-Eared Bat
Project information was submitted separately through the USFWS's Information for Planning and Consultation (IPaC) portal, and an official species list was generated on November 8, 2021 (Appendix C, pages C-69 to C-75 and pages C-89 to C-94). The projects are within range of the federally endangered Indiana bat (*Myotis sodalis*) and the federally threatened northern long-eared bat (NLEB) (*Myotis septentrionalis*). No additional species were generated in the IPaC species list other than the Indiana bat and northern long-eared bat.

INDOT Seymour District reviewed the USFWS GIS database for endangered bat species within the project area; in an email dated March 12, 2019 and May 4, 2020, INDOT stated that no documented Indiana bat or northern long-eared bat hibernacula and capture sites were located within 0.5 mile of the project area (Appendix C, pages C-65 to C-68).

The projects qualify for the *Range-wide Programmatic Informal Consultation for the Indiana bat and northern long- eared bat (NLEB)*, dated May 2016 (revised February 2018), between FHWA, Federal Railroad Administration (FRA), Federal Transit Administration (FTA), and USFWS.

For Des. No. 1800199, an effect determination key was completed on February 5, 2021, and based on the responses provided, the project was found to "may affect, but is not likely to adversely affect (NLAA)" the Indiana bat and/or the NLEB (Appendix C, pages C-76 to C-88). INDOT reviewed and verified the effect finding on February 22, 2021, and requested USFWS's review of the finding. No response was received from USFWS within the 14-day review period; therefore, it was concluded they concur with the finding. The project will be required to direct temporary lighting away from suitable habitat during the active season, apply time of year restrictions for tree removals of specified trees in the project plans, ensure all operators, employees, and contractors working in areas of known or presumed bat habitat are aware of all environmental commitments and all applicable Avoidance and Minimization Measures (AMMs), and on-site personnel will use best management practices, secondary containment measures, or other standard spill prevention and countermeasures to avoid impacts to possible hibernacula. Where practicable, a 300 foot buffer will be employed to separate fueling areas and other major containment risk activities from caves, sinkholes, losing streams, and springs in karst topography.

For Des. No. 1800086, an effect determination key was completed on March 16, 2021, and based on the responses provided, the project was found to "may affect, but is not likely to adversely affect (NLAA)" the Indiana bat and/or the NLEB (Appendix C, pages C-95 to C-103). INDOT reviewed and verified the effect finding on March 22, 2021, and requested USFWS's review of the finding. No response was received from USFWS within the 14-day review period; therefore, it was concluded they concur with the finding. The project will be required to direct temporary lighting away from suitable habitat during the active season, ensure all operators, employees, and contractors working in areas of known or presumed bat habitat are aware of all environmental commitments and all applicable AMMs, and on-site personnel will use best management practices, secondary containment measures, or other standard spill prevention and countermeasures to avoid impacts to possible hibernacula.

Avoidance and Minimization Measures and/or commitments are included as firm commitments in the *Environmental Commitments* section of this document.

This precludes the need for further consultation on this project as required under Section 7 of the Endangered Species Act, as amended. If new information on endangered species at the site becomes available, or if project plans are changed, USFWS will be contacted for consultation.

Geological and Mineral Resources	**Yes**	**No**
Project located within the Potential Karst Features Area of Indiana	X	
Karst features identified within or adjacent to the project area		X
Oil/gas or exploration/abandoned wells identified in the project area		X

Date Karst Study/Report reviewed by INDOT EWPO (if applicable): N/A

Discuss if project is located in Potential Karst Features Area of Indiana and if any karst features have been identified in the project area (from RFI). Discuss response received from IGWS coordination. Discuss if any mines, oil/gas, or exploration/abandoned wells were identified and if impacts will occur. Describe if any impacts will occur to any karst features. Include discussion of karst

study/report was completed and results. (Karst investigation must comply with the current Karst MOU and coordinated and reviewed by INDOT EWPO)

Based on a desktop review, the project is located inside the Indiana Karst Region as outlined in the *Protection of Karst Features during Project Development and Construction*. According to the topo map of the project area (Appendix B, page B-3) and the RFI reports (Appendix E, pages E-1 to E-25), there are no karst features identified within or adjacent to the project area. In the early coordination responses (August 5, 2019 and December 15, 2020), the IGS did indicate that karst features exist in the project area (Appendix C, pages C-28 to C-33). IGS also noted a high potential to encounter bedrock, and no active or abandoned mineral resource extraction sites are documented in the area. Responses from IGS has been communicated to the designer on September 9, 2019 and December 15, 2020. No impacts are expected.

SECTION C – OTHER RESOURCES

	Presence	Impacts Yes	Impacts No
Drinking Water Resources			
Wellhead Protection Area(s)			
Source Water Protection Area(s)			
Water Well(s)	X		X
Urbanized Area Boundary	X		X
Public Water System(s)	X		X

	Yes	No
Is the project located in the St. Joseph Sole Source Aquifer (SSA):		X
If Yes, is the FHWA/EPA SSA MOU Applicable?		
If Yes, is a Groundwater Assessment Required?		

Check the appropriate boxes and discuss each topic below. Provide details about impacts and summarize resource-specific coordination responses and any mitigation commitments. Reference responses in the Appendix.

Sole Source Aquifer
The project is located in Monroe County, which is not located within the area of the St. Joseph Sole Source Aquifer, the only legally designated sole source aquifer in the state of Indiana. Therefore, the FHWA/EPA Sole Source Aquifer Memorandum of Understanding (MOU) is not applicable to this project, a detailed groundwater assessment is not needed, and no impacts are expected.

Wellhead Protection Area and Source Water
The IDEM's Wellhead Proximity Determinator website (http://www.in.gov/idem/cleanwater/pages/wellhead/) was accessed on January 21, 2020 and August 28, 2020 by CMT. This project is not located within a Wellhead Protection Area or Source Water Area. No impacts are expected.

Water Wells
The IDNR Water Well Record Database website (https://www.in.gov/dnr/water/3595.htm) was accessed on January 21, 2020 and March 5, 2021 by CMT. The nearest well is located along Discovery Parkway, approximately 0.3 mile north of SR 45. The feature will not be affected because the well is located outside the construction limits. Therefore, no impacts are expected. Should it be determined during the right-of-way phase that these wells will be affected, a cost to cure will likely be included in the appraisal to restore the wells.

Urban Area Boundary
Based on a desktop review of the INDOT MS4 website (https://entapps.indot.in.gov/MS4/) by CMT on January 21, 2020 this project is located in an Urban Area Boundary (UAB). An early coordination letter for Des. No. 1800199 was sent on August 5, 2019, to the City of Bloomington, Monroe County, and Indiana University Bloomington MS4 coordinators. The MS4 coordinators did not respond within the 30-day time frame. An early coordination letter for Des. No. 1800086 was sent to these same entities on December 15, 2020. The Monroe County MS4 coordinator responded on December 15, 2020 and indicated they would like to review the stormwater quality management plan as well as the stormwater outfalls from the site to ensure they are adequate to handle the proposed discharges; the project responded that the requested information will be provided when the project submits for a Rule 5 permit (Appendix C, page C-60). The other MS4 coordinators did not respond within the 30-day timeframe.

Public Water System
Based on a desktop review, a site visit on July 24, 2019 and May 4, 2020 by CMT, and the aerial map of the project area (Appendix B, page B-2), this project is located where there is a public water system. The public water system will not be affected because relocation of the entire water main lines is not anticipated. Early coordination letter was sent on February 4, 2019, to City of Bloomington Utilities, followed by a request verification on May 5, 2020 and February 4, 2021 to include utility coordination for the added lanes scope of the project under Des. No. 1800086. A water main is located along the north side of SR 45, the west side of Discovery Parkway, and along the east side of Pete Ellis Drive (Appendix C, pages C-61 to C-64). Therefore, no impacts are expected and utility coordination is ongoing for the project.

Floodplains	**Presence**	**Impacts** Yes	**Impacts** No
Project located within a regulated floodplain			
Longitudinal encroachment			
Transverse encroachment			
Homes located in floodplain within 1000' up/downstream from project			

If applicable, indicate the Floodplain Level?

Level 1 ☐ Level 2 ☐ Level 3 ☐ Level 4 ☐ Level 5 ☐

Use the IDNR Floodway Information Portal to help determine potential impacts. Include floodplain map in appendix. Discuss impacts according to the classification system. If encroachment on a flood plain will occur, coordinate with the Local Flood Plain Administrator during design to insure consistency with the local flood plain planning.

The IDNR Indiana Floodway Information Portal website (http://dnrmaps.dnr.in.gov/appsphp/fdms/) was accessed on June 19, 2020 by CMT. This project is not located in a regulatory floodplain as determined from approved IDNR floodplain maps (Appendix F, page F-26). Therefore, it does not fall within the guidelines for the implementation of 23 CFR 650, 23 CFR 771, and 44 CFR. No impacts are expected.

Farmland	**Presence**	**Impacts** Yes	**Impacts** No
Agricultural Lands			
Prime Farmland (per NRCS)			

Total Points (from Section VII of CPA-106/AD-1006*) _____
**If 160 or greater, see CE Manual for guidance.*

Discuss existing farmland resources in the project area, impacts that will occur to farmland, and mitigation and minimization measures considered.

Based on a desktop review, a site visit on July 24, 2019 and May 4, 2020 by CMT, the aerial map of the project area (Appendix B, page B-2), there is no land that meets the definition of farmland under the Farmland Protection Policy Act (FPPA) within or adjacent to the project area. The requirements of the FPPA do not apply to this project; therefore, no impacts are expected. An early coordination letter was sent on August 5, 2019, to NRCS. The NRCS responded on August 30, 2019 that this project will not cause a conversion of prime farmland (Appendix C, page C-36).

SECTION D – CULTURAL RESOURCES

	Category(ies) and Type(s)	INDOT Approval Date(s)	N/A
Minor Projects PA			X

Full 106 Effect Finding

No Historic Properties Affected		No Adverse Effect		Adverse Effect	X

Eligible and/or Listed Resources Present

NRHP Building/Site/District(s)	X	Archaeology		NRHP Bridge(s)	

Documentation Prepared (mark all that apply)		ESD Approval Date(s)	SHPO Approval Date(s)
APE, Eligibility and Effect Determination	X	December 12, 2019	December 12, 2019
800.11 Documentation	X	October 8, 2021	November 3, 2021
Historic Properties Report or Short Report	X	December 12, 2019	December 30, 2019
Archaeological Records Check and Assessment			
Archaeological Phase Ia Survey Report	X	June 15, 2021	July 7, 2021
Archaeological Phase Ic Survey Report			
Other: HPSR Addendum, expanded APE	X	April 21, 2021	June 1, 2021

		MOA Signature Dates (List all signatories)
Memorandum of Agreement (MOA)	X	Required FHWA – February 1, 2022 SHPO – January 27, 2022 Invited INDOT – January 14, 2022 Bloomington Restorations, Inc. – January 20, 2022

If the project falls under the MPPA, describe the category(ies) that the project falls under and any approval dates. If the project requires full Section 106, use the headings provided. The completion of the Section 106 process requires that a Legal Notice be published in local newspapers. Please indicate the publication date, name of the paper(s) and the comment period deadline. Include any further Section 106 work which must be completed at a later date, such as mitigation from a MOA or avoidance commitments.

Area of Potential Effect (APE)
The APE of the project includes all properties adjacent to the project and those with a proximate viewshed of the project. Land use within the APE consists primarily of commercial and residential properties. SR 45 bisects the APE through its center from west to east. The dimensions of the APE were defined by the restricted views caused by the commercial and residential properties within the APE as well as restricted views caused by hills and bends in the road. At its widest point, the APE measures approximately 0.81 mile long and 0.34 mile wide. The Archaeological APE is 10.2 acres of project area investigated for the presence of archaeological resources (Appendix D, page D-24).

Coordination with Consulting Parties
On August 26, 2019, an early coordination letter, under Des. No. 1800199 was distributed to the organizations listed below inviting them to participate in the Section 106 process (Appendix D, pages D-47 to D-55). Those identified in bold print are participating consulting parties.

Organizations	Response Date
Indiana State Historic Preservation Officer (SHPO) (automatic consulting party)	September 18, 2019; Appendix D, pages D-58 to D-59
Indiana Landmarks, Central Regional Office	September 27, 2019; Appendix D, page D-61
Monroe County Historian	N/A
Monroe County History Center	N/A
Bloomington Historic Preservation Commission	N/A
Bloomington Restorations, Inc.	August 26, 2019; Via phone call
Monroe County Planning Department for Historic Preservation Board of Review	N/A
Mayor of the City of Bloomington	N/A
Bloomington/Monroe County Metropolitan Planning Organization	N/A
City of Bloomington Planning and Transportation Department	May 10, 2021; Consulting Party Meeting
Monroe County Commissioners	May 10, 2021; Consulting Party Meeting
Eastern Shawnee Tribe of Oklahoma	August 17, 2021; Appendix D, page D-108
Miami Tribe of Oklahoma	September 19, 2019; Appendix D, page D-60
Peoria Tribe of Oklahoma	N/A
Pokagon Band of Potawatomi Indians	N/A
Forest County Potawatomi Community	N/A

On September 18, 2019, the SHPO responded to the early coordination letter, stating that they were “not aware of any parties who should be invited to participate in the Section 106 consultation on this project, beyond those whom INDOT already has invited” (Appendix D, pages D-58 to D-59).

A virtual consulting party meeting was held via Microsoft Teams on May 10, 2021. The property owners of the Hinkle Garton Farmstead, Bloomington Restorations, Inc., City of Bloomington representatives, Monroe County Commissioners, Indiana Landmarks, Shawnee Tribe Tribal Historic Preservation Officer, SHPO, INDOT, FHWA, and members of the project team attended the meeting. The meeting provided a project overview, current condition of the intersection and corridor, the proposed alternatives under consideration, and the effects of the undertaking upon the historic property, Hinkle Garton Farmstead, and possible avoidance, minimization, and mitigation measures. At this meeting, Bloomington Restorations, Inc. inquired about the feasibility of installing sidewalk along the south side of SR 45, on the historic property, since the City of Bloomington has been requesting one for ADA compliance; the installation as a part of the project would be further explored as a potential net benefit to the property. Meeting minutes were sent to the consulting parties on May 20, 2021 (Appendix D, pages D-83 to D-99).

Archaeology
An archaeology report (Jackson, June 2021) was prepared by SJCA Inc. and sent to SHPO and tribal consulting parties on June 17, 2021. The archaeological investigation located no archaeological sites within the project area and/or previously recorded sites that

were investigated did not warrant additional investigation. (Appendix D, pages D-113 to D-114).

In their letter July 7, 2021, SHPO staff concurred with the conclusions of the archaeology report (Jackson, June 15, 2021) that "no further investigations appear necessary." Additionally, SHPO staff noted that "a portion of site 12Mo1509 has been recorded within the survey. While no evidence of the site was encountered by the survey, a resurvey form for site 12Mo1509 should be submitted to SHAARD for review" (Appendix D, pages D-106 to D-107). SJCA has submitted the resurvey form to SHAARD.

On August 17, 2021, the Eastern Shawnee responded to the archaeology report stating that "the project proposes NO Adverse Effect or endangerment to known sites of interest to the Eastern Shawnee Tribe. Please continue project as planned" (Appendix D, page D-108). None of the other consulting parties provided any additional comments regarding the archaeology report.

Historic Properties
A Historic Property Short Report (HPSR) was completed for the project (Wood, December 2019) by SJCA, formerly Green 3, LLC. The APE contains one resource listed or previously determined eligible for inclusion in the NRHP: Hinkle Garton Farmstead (NR-1057/NR-1892). Hinkle Garton Farmstead is a two-story Queen Anne-style home built in 1892. A one-and-a-half story gabled ell house (built in 1910), a blacksmith's shed/smokehouse (built in 1901), a dairy barn (built in 1928), a garage (built in 1925), and a grain crib barn (construction date unknown) are also associated with the property. All structures are wood frame with wood siding, and the two houses have stone foundations and asphalt roofs. It was listed in the National Register of Historic Places (NRHP) under Criterion A for its association with the nineteenth and twentieth century agriculture and under Criterion C for its Queen Anne architectural style as well as its intact group of outbuildings which together represent the only such grouping in the City of Bloomington (Appendix D, pages D-109 to D-110).

On December 10, 2019, the HPSR was distributed to invited consulting parties (Appendix D, pages D-62 to D-66).

On December 11, 2019, Bloomington Restorations, Inc. sent a letter stating that the HPSR did not "mention the other above-ground structures that are fifty years old or older on the Hinkle Garton Farmstead. These structures are the blacksmith's shed/smokehouse built in 1901, the dairy barn constructed in 1928, the circa 1925 garage, and a grain crib barn of undetermined construction date (but obviously more than 50 years old). The garage and dairy barn are both close to the state road, with the garage just feet away from the current south edge of pavement. These non-residential structures are an important part of the significance of the farmstead" (Appendix D, page D-67)

On December 17, 2019, Indiana Landmarks sent a letter stating that they concurred with the HPSR that the APE contains one resource listed in NRHP: Hinkle Garton Farmstead (NR-1597/NR-1892). They did not believe that any additional resources were eligible for the NRHP within the APE (Appendix D, page D-68).

On December 30, 2019, SHPO agreed with the conclusions of the HPSR that the Hinkle Garton Farmstead (NR-1057/NR-1892) is the only historic property located within the APE. They further stated: "The HPSR indicated that approximately 1.15-acres of permanent right-of-way will be acquired for this project. It will be helpful to know if any of this planned acquisition is located within the boundaries of the NRHP-listed property" (Appendix D, page D-69 to D-70).

Since the distribution of the HPSR, the project with Des. No. 1800086 was combined with the project with Des. No. 1800199; Des. No. 1800199 is the lead project. The addition of Des. No. 1800086 necessitated the creation of an HPSR addendum (April 13, 2021) by SJCA. No additional historic properties were found. No other resources within the APE were recommended eligible for listing in the NRHP (Appendix D, pages D-111 to D-112).

On April 21, 22021, the HPSR addendum was distributed to invited consulting parties (Appendix D, pages D-71 to D-81).

On June 1, 2021, SHPO sent a letter stating the expanded APE as presented in the HPSR addendum "appears to be of adequate size to encompass the geographic area in which direct and indirect effects of a project of this nature could occur." They also agreed "with the conclusions in the historic property short report addendum that there are no additional resources listed or eligible for inclusion in the National Register of Historic Places ("NRHP") located within the expanded APE. Thus, the only historic property located within the project's original and expanded APE remains the Hinkle Garton Farmstead (NR-1057/NR-1892), which was listed in the NRHP on April 12, 2007" (Appendix D, pages D-101 to D-102). None of the other consulting parties provided any additional comments regarding the HPSR addendum.

Documentation, Findings
INDOT, acting on behalf of FHWA, has determined an "Adverse Effect" finding is appropriate for this undertaking. A finding of "Adverse Effect" has been determined for the Hinkle Garton Farmstead, which is listed on the NRHP.

INDOT, acting on behalf of FHWA, requested the Indiana SHPO provide written concurrence with the Section 106 determination of "Adverse Effect" for the Hinkle Garton Farmstead on October 8, 2021 and consulting parties were invited to review the determination and provide comments within 30 days (Appendix D, pages D-1 to D-4).

On November 3, 2021, SHPO concurred with the Section 106 finding of "Adverse Effect" for this federal undertaking (Appendix D, pages D-136 to D-137).

MOA

Evaluated alternatives that would avoid or minimize impacts to the Hinkle Garton Farmstead are discussed below in *Section E – Section 4(f) Resources/ Section 6(f) Resources*.

In an effort to mitigate the finding of Adverse Effect, a MOA was established between the FHWA, Indiana SHPO, INDOT, Indiana Landmarks, and Bloomington Restorations, Inc. The MOA was developed in discussion with consulting parties through meetings and correspondence. All of the stipulations contained in the MOA are firm project commitments. The MOA was amended in June 2022. A copy of the executed MOA is located in Appendix D, pages D-142 to D-157.

The FHWA, in coordination with INDOT, shall ensure that the following measures are carried out:

A. INDOT will build an ADA compliant sidewalk along the south side of 10th Street/State Road 45 and doing so in such a way as to minimize the need for grading in front of the Hinkle-Garton Farmstead. The following items concerning the construction of the sidewalk are noted on the plan sheets:
   - i. Care will be made to avoid disturbances of roots of the row of mature maple trees that line the frontage and will provide a separation between the highway and the farmstead.
   - ii. Care will be made to avoid disturbing the historic garage structure adjacent to the roadway, limestone marker broken off at ground level about 50 feet east of the carriage house/garage, limestone post on the east side of the driveway to the main house and the northwest corner of the garage.

B. INDOT will provide reimbursement to Bloomington Restorations, Inc., property owner of the Hinkle-Garton Farmstead, for the rehabilitation/repair and repainting of the historic main house on the property. The cost is estimated at approximately $40,000.00. This work will be done before the intersection improvements begin and payment to Bloomington Restorations, Inc. will be made via reimbursement in an amount not to exceed $40,000.00. The reimbursement will be provided through the execution of an agreement between INDOT and Bloomington Restorations, Inc.

C. INDOT will ensure the approximate 150-foot existing wood fence located along SR 45 (10th Street) east of the barn to about 350 feet west of N Pete Ellis Dr. will be relocated and reset in consultation with property owner, Bloomington Restorations, Inc.

D. Tree Clearing and Replacement
   - i. INDOT and/or its representatives shall consult with the property owners of the Hinkle-Garton Farmstead, Bloomington Restorations, Inc., and if appropriate and given consent by the property owner, INDOT and/or its representatives will replace mature trees within the historic boundary of the property that must be removed for the construction of this project.
   - ii. INDOT and/or its representatives shall make a good faith effort to replace trees with matching species such as pecan (*Carya illinoinensis*), persimmon (*Diospyros virginiana*), butternut (*Juglans cinerea*), and chestnut (*Castanea*), or an alternative species approved by the property owner, where reasonably feasible.
   - iii. INDOT and/or its representatives shall make a good faith effort to replace the trees at a 1:1 ratio or as close to a 1:1 ratio as reasonable.
   - iv. When available, but before performing work within the Hinkle-Garton Farmstead historic property boundary, INDOT and/or its representatives shall present a tree clearing and replacement plan to consulting parties.
   - v. The tree clearing and replacement plan shall identify the location and species of the trees to be removed as part of this project and the location and species of replacement trees. Trees shall be planted far enough from the sidewalk to minimize debris.
   - vi. Indiana SHPO and consulting parties will have thirty (30) days to review and comment on the plans. If the Indiana SHPO does not respond to this submission within thirty (30) days, acceptance will be assumed.
   - vii. If the Indiana SHPO or any consulting party responds with recommendations, a good faith effort to accommodate the recommendation will be made. FHWA/INDOT and/or its representatives will inform the Indiana SHPO and consulting parties of its response to such recommendations and submit any revisions

for their records.

viii. INDOT and/or its contractor shall remove existing vegetation and replant in accordance with the approved tree clearing and replacement plan within 2 years of construction letting. INDOT shall coordinate with Bloomington Restorations, Inc. prior to and during work on the property.

ix. INDOT and/or its contractor shall inspect and monitor the mitigative plantings following the INDOT Standard Specifications for Care, Inspection, and Replacement of Plant Materials (INDOT Spec 622.18).

x. Bloomington Restorations, Inc. will provide INDOT and/or its contractor with right-of-entry to the property during mitigation implementation and subsequent monitoring.

xi. After completion of the replanting of replacement trees, INDOT and/or its representatives will provide documentation to that effect to consulting parties.

Public Involvement:
To meet the public involvement requirements of Section 106, a legal notice of FHWA's finding of Adverse Effect was published in *The Herald Times* on October 13, 2021 offering the public an opportunity to submit comment pursuant to 36 CFR 800.2(d), 800.3(e), and 800.6(a)(4). The public comment period closed 30 days later on November 12, 2021. The text of the public notice and the affidavit of publication appear in Appendix D, pages D-138 to D-141. No comments were received

The amended MOA was signed by FHWA on June 13, 2022, Indiana SHPO on June 6, 2022, INDOT on May 31, 2022, and Bloomington Restorations, Inc. on June 3, 2022. This completes the Section 106 process and the responsibilities of the FHWA under Section 106 have been fulfilled.

SECTION E – SECTION 4(f) RESOURCES/ SECTION 6(f) RESOURCES

	Presence	Use	
Parks and Other Recreational Land		**Yes**	**No**
Publicly owned park			
Publicly owned recreation area			
Other (school, state/national forest, bikeway, etc.)	X		X
Wildlife and Waterfowl Refuges			
National Wildlife Refuge			
National Natural Landmark			
State Wildlife Area			
State Nature Preserve			
Historic Properties			
Site eligible and/or listed on the NRHP	X	X	

	Evaluations Prepared
Programmatic Section 4(f)	X
"De minimis" Impact	
Individual Section 4(f)	
Any exception included in 23 CFR 774.13	X

Discuss Programmatic Section 4(f) and "de minimis" Section 4(f) impacts in the discussion below. Individual Section 4(f) documentation must be included in the appendix and summarized below. Discuss proposed alternatives that satisfy the requirements of Section 4(f). FHWA has identified various exceptions to the requirement for Section 4(f) approval. Refer to 23 CFR § 774.13 - Exceptions.

Section 4(f) of the U.S. Department of Transportation Act of 1966 prohibits the use of certain public and historic lands for federally funded transportation facilities unless there is no feasible and prudent alternative. The law applies to significant publicly owned parks, recreation areas, wildlife / waterfowl refuges, and NRHP eligible or listed historic properties regardless of ownership. Lands subject to this law are considered Section 4(f) resources.

Based on a desktop review, the aerial map of the project area (Appendix B, page B-2), and the RFI reports (Appendix E, pages E-1 to E-25), there are seventeen (17) potential 4(f) resources located within the 0.5 mile search radius. According to additional research and a site visits on July 24, 2019 and May 4, 2020 by CMT, there are three (3) potential resources located within or adjacent to the project area. The potential resources include Indiana University Bloomington, existing and planned Bloomington Sidepaths, and the Hinkle-Garton Farmstead.

Indiana University Bloomington is a state university located along the north side of SR 45 between SR 46 and Discovery Parkway and is within the construction limits of the project. The property was identified as a potential recreational resource in the RFI reports (Appendix E, pages E-1 to E-25). After further review, universities are only available for a select group of the public and are not subject to 4(f) protections. Indiana University Bloomington did not respond to the early coordination letters sent on August 5, 2019 and December 15, 2020.

Bloomington Sidepaths are multi-use paths and part of the multi-modal transportation system located throughout the City of Bloomington; existing sidepaths are located within and adjacent to the project area. One existing sidepath, a segment of the Bloomington North Sidepath, is located along the north side of SR 45 between the SR 46 and Discovery Parkway intersections; the project will require reconstructing the majority of the sidepath in order to widen SR 45 and Discovery Parkway. An existing trail, the SR 45/46 Bypass and College Mall Road trail, is located along the east side of SR 46 within an existing highway easement; while the trail is within the construction limits at the east side of the SR 46 intersection with SR 45, the trail access and continuity will not be impacted during construction. An existing sidepath, a segment of the Bloomington Northeast Sidepath, is located along the east side Pete Ellis Drive south of John Hinkle Place and is outside the construction limits of the project. Three planned sidepath segments, one along Discovery Parkway, one along Pete Ellis Drive between SR 45 and John Hinkle Place, and one along SR 45 east of the Discovery Parkway intersection are located within or adjacent to the project area. The project is not expected to have an impact on the ability to construct the sidepath trails in the future. The project will improve the existing sidewalk in the southeast corner of the Pete Ellis Drive/Discovery Parkway intersection to include a 10-foot multi-use path that will tie into the existing multi-use path located south of John Hinkle Place. The sidewalks along the north side of SR 45, east of Discovery Parkway will be reconstruction as 8-foot multi-use path. The existing and planned sidepath segments are included in the City of Bloomington Bicycle and Pedestrian Transportation & Greenway System Plan March 2008 (https://bloomington.in.gov/sites/default/files/2017-07/BPTGSP2008_reduced_0.pdf).

The proposed project meets the criteria for exception 23 CRF 774.13 (f): certain trails, paths, bikeways and sidewalks. The proposed project is exempt under 23 CRF 774.13 and does not constitute “use” of the 4(f) property, based on the following assessment: the sidepaths occupy the transportation ROW and are part of the local transportation facility serving a function primarily for transportation; furthermore, the managing entity of the sidepaths is the City of Bloomington and the project will maintain continuity of the sidepath upon completion of the project.

In the Des. No. 1800199 RFI report (Appendix E, pages E-1 to E-15), the existing sidepath along SR 45 was identified being managed by the Bloomington Parks and Recreation Department. The Bloomington Parks and Recreation Department did not respond to the early coordination letter sent on August 5, 2019; a follow-up email was sent on July 17, 2020 to confirm that the existing sidepath was part of the local transportation system and functions primarily for transportation. They responded on July 17, 2020 indicating that the sidepaths throughout Bloomington are managed by the City of Bloomington (Appendix C, pages C-51 to C-52). An early coordination letter was sent to the official with jurisdiction, Bloomington City Council, on August 5, 2019. The City Council responded that they were in support of the project and would like to collaborate to ensure the best design possible is achieved and requested that the project give all modes of transportation equitable treatment during the design process. The City also indicated that it was concerned with the need for a multi-use path on the east side of Discovery Parkway and the project may prevent the installation of the path in the future (Appendix C, pages C-39 to C-40). INDOT offered to enter into a partnering agreement with the City to construct the full path along the east side of Discovery Parkway; the City declined the offer and requested that the sidewalk in the northeast corner of the intersection be increased from 6 feet wide to 10 feet wide in order to allow for a possible future tie-in (Appendix C, pages C-41 to C-50); this request has been incorporated into the project design.

Hinkle Garton Farmstead (NR-1057/NR-1892)
This undertaking will convert a portion of the property from the Hinkle Garton Farmstead (NR-1057/NR-1892), a Section 4(f) historic property, to a transportation use. As discussed in *Section D – Cultural Resources* above, FHWA has determined the appropriate Section 106 finding is "Adverse Effect" which requires the preparation of a Section 4(f) evaluation for the Hinkle Garton Farmstead. The proposed undertaking requires ROW from the Hinkle Garton Farmstead and changes along SR 45 and the SR 45 and Pete Ellis Drive/Discovery Parkway intersection possess the potential to diminish the integrity of the historic property and present an “Adverse Effect” to the Hinkle Garton Farmstead. However, the planned project activities would be a net benefit to the property since they include constructing an ADA compliant sidewalk along the south side of State Road 45, located across the northern boundary of the Hinkle Garton Farmstead. This sidewalk would provide pedestrian access to the Hinkle Garton Farmstead. By incorporating this sidewalk into this undertaking, Bloomington Restorations, Inc. is now able to focus its resources on the maintenance and preservation of the historic property rather than installing a sidewalk adjacent to the property. Additionally, incorporating the sidewalk into this undertaking allows for robust mitigation and minimization measures that would not be possible without FHWA/INDOT participation. Therefore, FHWA and INDOT have determined that the undertaking will result in an overall net benefit on the Hinkle Garton Farmstead and can be approved under the nationwide programmatic Section 4(f) evaluation. Indiana SHPO, as the owner with jurisdiction for Section 4(f) historic properties, concurred with the application of the Net Benefit Programmatic 4(f) use for this resource by signing the First Amended MOA on June 6, 2022 (Appendix D, page D-145 and D-149).

Prior to consideration of any alternative which results in the use of Section 4(f) property, Section 4(f) requires consideration of a reasonable range of feasible and prudent alternatives which avoid the use of Section 4(f) property, including the No-Build Alternative. The following alternatives were considered, which avoid use of the Section 4(f) property. Note that Alternatives 1 and 2 below were not presented in the “Other Alternatives Considered” Section as dismissed alternatives.

Do Nothing/No Build Alternative – Under this alternative, no work would occur and there would not be impacts to the historic property, but it would not meet the project purpose and need; therefore, it was not considered to be a feasible and prudent alternative.

Alternative 1: Roundabout – This alternative would replace the signalized SR 45 and Pete Ellis Drive/Discovery Parkway intersection with a multi-lane roundabout. The positioning of the roundabout to the north would avoid the need for ROW from the Hinkle Garton Farmstead and would result in no Section 4(f) use of the property. However, it would result in substantial adverse impacts to existing utility facilities and the properties in the northeast and northwest quadrants of the intersection. To accommodate the construction of the roundabout alternative, the apartment building located on the northeast quadrant of the intersection would need to be removed, resulting in the relocation of all residents and the removal of 10 of the 14 existing parking spaces. Utility relocations would also be necessary in the northeast quadrant of the intersection. While this alternative is feasible, it is not prudent due to increased cost and substantial adverse community impacts due to the relocations of the apartment building residents and utility relocations.

Alternative 2: Exclusive turn lanes – This alternative would add exclusive right- and left-turn lanes on all approaches to the intersection. The proposed improvements would include shifting the alignment north and avoiding the need for ROW from the Hinkle Garton Farmstead and would result in no Section 4(f) use of the property. Additional improvements proposed included involve turn lane widening on portions of SR 45, Pete Ellis Dr., and Discovery Parkway; adding curb and gutter along the south side of SR 45; pedestrian improvements with new ADA compliant curb ramps; and an added turn lane in both the eastbound and westbound directions from the westbound approach of the SR 45 and SR 46 intersection eastward along SR 45 to Pete Ellis Drive/Discovery Parkway. To construct the additional pavement for the new turn lanes on SR 45 between SR 46 and Pete Ellis Drive/Discovery Parkway and to best minimize impacts to the historic property, SR 45 would be shifted to the north throughout the corridor. Shifting the alignment further north would avoid the historic property altogether, but it would result in the same impacts to the apartment complex (building removal, resident relocations, and loss of parking) as well as most, if not all, of the additional utility relocations associated with the roundabout. This alternative would also result in a loss of approximately 12 parking spots in the post office parking lot in the southeast quadrant of the intersection and several additional tree removals along the north side of SR 45. While this alternative is feasible, it is not prudent due to increased cost and substantial adverse community impacts due to the relocations of the apartment building residents, utility relocations, impacts to the post office, and additional tree removals.

Based on the evaluation of alternatives no feasible or prudent avoidance alternative was identified. The preferred

alternative best minimizes the impacts while still satisfying the project's purpose and need. The undertaking avoids any disturbance to the garage located adjacent to the roadway and minimizes the ROW needed from the Hinkle Garton Farmstead. The signed MOA details the mitigation stipulations that are firm project commitments (Appendix D, pages D-142 to D-157).

On June 13, 2022, FHWA concurred with the Section 4(f) compliance requirements (Appendix D, pages D-6 to D-7).

Section 6(f) Involvement	Presence	Use	
		Yes	No
Section 6(f) Property			

Discuss Section 6(f) resources present or not present. Discuss if any conversion would occur as a result of this project. If conversion will occur, discuss the conversion approval.

The U.S. Land and Water Conservation Fund Act of 1965 established the Land and Water Conservation Fund (LWCF), which was created to preserve, develop, and assure accessibility to outdoor recreation resources. Section 6(f) of this Act prohibits conversion of lands purchased with LWCF monies to a non-recreation use.

A review of 6(f) properties on the INDOT ESD website revealed a total of twenty-two (22) properties in Monroe County (Appendix J, page J-1). None of these properties are located within or adjacent to the project area. Therefore, there will be no impacts to 6(f) resources.

SECTION F – Air Quality

STIP/TIP and Conformity Status of the Project	Yes	No
Is the project in the most current STIP/TIP?	X	
Is the project located in an MPO Area?	X	
Is the project in an air quality non-attainment or maintenance area?		X
If Yes, then:		
Is the project in the most current MPO TIP?		
Is the project exempt from conformity?		
If No, then:		
Is the project in the Transportation Plan (TP)?		
Is a hot spot analysis required (CO/PM)?		

Location in STIP: Pg. 325 of 2022-2026 STIP

Name of MPO (if applicable): Bloomington-Monroe County Metropolitan Planning Organization Transportation Improvement Program

Location in TIP (if applicable): Pg. 31 & 34 of the 2022-2026 TIP

Level of MSAT Analysis required?

Level 1a [ ] Level 1b [X] Level 2 [ ] Level 3 [ ] Level 4 [ ] Level 5 [ ]

Describe if the project is listed in the STIP and if it is in a TIP. Describe the attainment status of the county(ies) where the project is located. Indicate whether the project is exempt from a conformity determination. If the project is not exempt, include information about the TP and TIP. Describe if a hot spot analysis is required and the MSAT Level.

STIP/TIP

The Des. No. 1800199 and 1800086 projects are included in the Fiscal Year (FY) 2022-2026 Bloomington-Monroe County Metropolitan Planning Organization Transportation Improvement Program (BMCMPO TIP) (Appendix H, pages H-3 to H-4) and

Statewide Transportation Improvement Program (STIP) (Appendix H, page H-1) and STIP Modification 22-38 (Appendix H, page H-2). Des. No. 1800199 RW and CN funding is in the Initial 2022-2026 STIP and Modification 22-38 for the additional CN increase. PE and RW funds were used as 100% state funds due to funding at the time of the PO being generated was not in the STIP and by permission 100% state funds were eligible. Des. No. 1800086 is in the initial STIP 2022-2026 and Modification 22-38 for the additional CN increase. The STIP is by the lead des (1800199) but it does include the baby des (1800086) as well. As mentioned before PE and RW funds were used as 100% state funds due to funding at the time of the PO being generated was not in the STIP and by permission 100% state funds were eligible. STIP updates will occur prior to Ready for Contracts date.

Attainment Status
This project is located in Monroe County, which is currently in attainment for all criteria pollutants according to the US Environmental Protection Agency Nonattainment Areas for Criteria Pollutants Green Book (https://www.epa.gov/green-book). Therefore, the conformity procedures of 40 CFR Part 93 do not apply.

MSAT
The purpose of this project is to reduce congestion by constructing exclusive left- and right-turn lanes on all approaches of the Pete Ellis Drive/Discovery Parkway intersection and provide an added lane in the eastbound and westbound directions of the SR 45 corridor between SR 46 and Pete Ellis Drive/Discovery Parkway; these added lanes will be extensions of the existing turn lanes at the SR 46 intersection and new turn lanes at the Pete Ellis Drive/Discovery Parkway intersection. This project has been determined to generate minimal air quality impacts for Clean Air Act criteria pollutants and has not been linked with any special mobile source air toxic (MSAT) concerns. As such, this project will not result in changes in traffic volumes, vehicle mix, basic project location, or any other factor that would cause a meaningful increase in MSAT impacts of the project from that of the no-build alternative.

Moreover, Environmental Protection Agency (EPA) regulations for vehicle engines and fuels will cause overall MSAT emissions to decline significantly over the next several decades. Based on regulations now in effect, an analysis of national trends with EPA's MOVES2014 model forecasts a combined reduction of over 90 percent in the total annual emissions rate for the priority MSAT from 2010 to 2050 while vehicle-miles of travel are projected to increase by over 45 percent. This will both reduce the background level of MSAT as well as the possibility of even minor MSAT emissions from this project.

SECTION G - NOISE

Noise	**Yes**	**No**
Is a noise analysis required in accordance with FHWA regulations and INDOT's traffic noise policy?		X

Date Noise Analysis was approved/technically sufficient by INDOT ESD: _____

Describe if the project is a Type I or Type III project. If it is a Type I project, describe the studies completed to date and if noise impacts were identified. If noise impacts were identified, describe if abatement is feasible and reasonable and include a statement of likelihood.

This project is a Type III project. In accordance with 23 CFR 772 and the current *Indiana Department of Transportation Traffic Noise Analysis Procedure*, this action does not require a formal noise analysis.

SECTION H – COMMUNITY IMPACTS

Regional, Community & Neighborhood Factors	Yes	No
Will the proposed action comply with the local/regional development patterns for the area?	X	
Will the proposed action result in substantial impacts to community cohesion?		X
Will the proposed action result in substantial impacts to local tax base or property values?		X
Will construction activities impact community events (festivals, fairs, etc.)?		X
Does the community have an approved transition plan?	X	
If No, are steps being made to advance the community's transition plan?		
Does the project comply with the transition plan? (explain in the discussion below)	X	

Discuss how the project complies with the area's local/regional development patterns; whether the project will impact community cohesion; and impact community events. Discuss how the project conforms with the ADA Transition Plan.

Land use in the area of the project consists primarily of residential and commercial uses. No changes in land use and no displacements or changes in access to businesses or residences are anticipated as a result of the project. The existing tax base, property value, and economic development potential are not expected to be affected by the project.

The City of Bloomington 2018 Comprehensive Plan (available at https://bloomington.in.gov/sites/default/files/2018-04/Final%20Council%20Amended%20CMP%20%20Web%202.pdf) indicates that for motor vehicle transportation, there is a need to focus on roadway maintenance, improve efficiency within existing space, and reduce crash risk and severity. Although the project is not specifically mentioned in the plan, the new hospital development along Discovery Parkway is discussed, along with the need for the surrounding transportation network to meet high safety and access standards. This project conforms to the plan as the purpose of the project is to reduce congestion along SR 45, east of the SR 46 intersection, and around the SR 45 and Pete Ellis Drive/Discovery Parkway intersection, which will aid in improved accessibility and pedestrian mobility and linkage systems around the new hospital.

The City of Bloomington 2014 ADA Transition Plan (available upon request to the City of Bloomington Planning & Transportation Department) describes the city's commitment to meeting or exceeding the requirements of the ADA. The Plan recommends an approach to meet state and federal ADA guidelines and requirements, by identifying non-compliant City-owned structures, sidewalks, and curb cuts. Sidewalks segments were prioritized for improvement based on its accessibility grade and its proximity to certain types of land use, either a government facility, commercial area, or other land use. Improvements to the ROW such as repaving, traffic signal modernization, and sidewalk improvements and repairs, require the City to update pedestrian facilities to meet ADA specifications. Therefore, the City's policy for paving operations is to update curb ramps at intersections with public streets and public alleys where sidewalks exist to the maximum extent feasible. Since pedestrian facilities are located within the project area and are a part of this project, the project will comply with the City's Transition Plan.

The MOT for the project will involve the implementation of phased construction and road closures along Pete Ellis Drive/Discovery Parkway north and south of the intersection with posted detours. For the widening of SR 45, the project will implement a phased construction and widening in order to allow for one lane of traffic in each direction and avoid full closure of SR 45. The detours for Pete Ellis Drive and Discovery Parkway will pose a temporary inconvenience to travelling motorists, including school buses and emergency services; however, no significant delays are anticipated, and all inconveniences will cease upon project completion.

Construction activities will not impact community events. According to the city of Bloomington tourism website, many events, including the Bloomington Early Music Festival, Limestone Comedy Festival, Pridefest, and Arts Fair on the Square, occur throughout the year in downtown Bloomington, approximately 2.8 miles west from the project. Other community events occur throughout the year on the central part of the Indiana Bloomington campus, approximately 1 mile northwest from the project, including Homecoming Weekend and Hoosier Half Marathon. Other various community events occur in the surrounding area throughout the year. Any impacts to these events will likely be temporary minor traffic delays during the construction period. No impacts to community events are expected after construction is completed.

Public Facilities and Services

Discuss what public facilities and services are present in the project area and impacts (such as MOT) that will occur to them. Include how the impacts have been minimized and what coordination has occurred. Some examples of public facilities and services include

health facilities, educational facilities, public and private utilities, emergency services, religious institutions, airports, transportation or public pedestrian and bicycle facilities.

Based on a desktop review, the aerial map of the project area (Appendix B, page B-2), and the RFI reports (Appendix E, pages E-1 to E-25), there are two (2) religious facilities, one (1) railroad, three (3) schools, and one (1) future hospital are located within the 0.5 mile of the project. That number was determined to be one (1) school by the site visits on July 24, 2019 and May 4, 2020 by CMT. The Indiana University Bloomington campus, five (5) public bus stops, and pedestrian sidewalks and multi-use paths are within or adjacent to the project area.

A portion of the Indiana University Bloomington campus is located along the north side of SR 45 between SR 46 and Discovery Parkway. The MOT for the project will involve phased construction along SR 45 with lane restrictions/shifts and road closures along Discovery Parkway and Pete Ellis Drive with posted detours. Although access driveways to campus buildings are located along SR 45 and Discovery Parkway, access to all properties will be maintained during construction.

Five public bus stops are located within the project area along SR 45 and Pete Ellis Drive; Lew May, the General Bloomington Transit responded to the Des. No. 1800086 early coordination letter on December 15, 2020, requesting a meeting to discuss both of the SR 45 projects (Appendix C, page C-55). Project managers from CMT and INDOT virtually met with Bloomington Transit on January 12, 2021 to discuss both of the projects in relation to the existing bus stops within the project area (meeting minutes are included in Appendix C, pages C-56 to C-57). The project has incorporated most of the requests and suggestions from Bloomington Transit, including extending the westbound turn lane to allow more room for buses to stop. Following additional coordination, it was determined that a pedestrian crossing would be added on the east side of the Indiana University Technology entrance and the bus stop will be relocated to this crossing. Since the roadway improvements do not require any change in the location of the bus stops on the south side in the eastbound direction, these bus stop locations will not be relocated as part of this project. Coordination with Bloomington Transit is ongoing and Bloomington Transit will be notified at least two weeks prior to the start of construction.

Existing pedestrian sidewalks are located within and adjacent to the project area along SR 45 and Pete Ellis Drive. Pedestrian detour signage will be posted on the sidewalks as shown on the MOT plan sheets. Bloomington sidepaths are located within the project area as discussed in the Section 4(f) discussion above.

The Indiana University Health Bloomington Hospital located approximately 0.50 mile northwest of the project area at the intersection of SR 46 and Discovery Parkway; the hospital opened in late 2021. Primary access to the hospital is from the west side of the hospital from SR 46. No response was received from the early coordination letter.

Access to all properties will be maintained during construction as stated in the MOT General Notes.

Several utilities services are present within the project area (electric, water, telephone, gas, etc.), some of which, including electrical and telephone/cable, are expected to be impacted by the project and may need to be relocated. Utility coordination has been initiated for the project and coordination is ongoing.

Bloomington City Council responded on August 27, 2019 with recommendations to avoid or minimize impacts to pedestrian and bicyclist facilities and ask that all work within the project limits comply with accessibility requirements, adopted City plans, and best practices for transportation infrastructure in an urban, multimodal environment. The City also indicated that it was concerned with the need for a multi-use path on the east side of Discovery Parkway and the project may prevent the installation of the path in the future (Appendix C, pages C-39 to C-40). INDOT offered to enter into a partnering agreement with the City to construct the full path along the east side of Discovery Parkway; the City declined the offer and requested that the sidewalk in the northeast corner of the intersection be increased from 6 feet wide to 10 feet wide in order to allow for a future tie-in (Appendix C, pages C-41 to C-50). The Monroe County Community School Corporation (MCCSC) director of transportation responded on August 19, 2019 with information concerning school bus routes which utilize the intersection (Appendix C, page C-53). MCCSC also responded on January 19, 2021, with additional information about the types of school bus routes utilizing the project area and times when students need to be at school in order to receive breakfast (Appendix C, page C-54). All applicable agency recommendations are included in the Environmental Commitments section of this CE document.

It is the responsibility of the project sponsor to notify school corporations, emergency services, and Bloomington Transit at least two weeks prior to any construction that would block or limit access.

Environmental Justice (EJ) (Presidential EO 12898)	Yes	No
During the development of the project were EJ issues identified?		X
Does the project require an EJ analysis?	X	
If YES, then:		
Are any EJ populations located within the project area?		X
Will the project result in adversely high and disproportionate impacts to EJ populations?		X

Indicate if EJ issues were identified during project development. If an EJ analysis was not required, discuss why. If an EJ analysis was required, describe how the EJ population was identified. Include if the project has a disproportionately high and adverse effect on EJ populations and explain your reasoning. If yes, describe actions to avoid, minimize and mitigate these effects.

Under FHWA Order 6640.23A, FHWA and the project sponsor, as a recipient of funding from FHWA, are responsible to ensure that their programs, policies, and activities do not have a disproportionately high and adverse effect on minority or low-income populations. Per the current INDOT Categorical Exclusion Manual, an Environmental Justice (EJ) Analysis is required for any project that has two or more relocations or 0.5 acre of additional permanent right-of-way (ROW). The project will require approximately 4.18 acres of new permanent ROW and no relocations. Therefore, an EJ Analysis is required.

Potential EJ impacts are detected by locating minority and low-income populations relative to a reference population to determine if populations of EJ concern exist and whether there could be disproportionately high and adverse impacts to them. The reference population may be a county, city or town and is called the community of comparison (COC). In this project, the COC is Bloomington Township, Indiana. The community that overlaps the project area is called the affected community (AC). In this project, the AC is Census Tract 8, and Census Tract 9.03. An AC has a population of concern for EJ if the population is more than 50% minority or low-income or if the low-income or minority population is 125% of the COC. Data from the 2015-2019 American Community Survey 5-Year Estimates was obtained from the US Census Bureau Website https://data.census.gov/cedsci/ on November 11, 2021 by CMT. The data collected for minority and low-income populations within the AC are summarized in the below table.

Table: Minority and Low-Income Data (2015-2019 American Community Survey 5-Year Estimates)

	COC - (Bloomington Township, Indiana)	AC-1 – Census Tract 8	AC-2 – Census Tract 9.03
Percent Minority	21.3%	19.0%	21.8%
125% of COC	26.6%	AC < 125% COC	AC < 125% COC
EJ Population of Concern	--	No	No
Percent Low-Income	44.2%	23.9%	25.4%
125% of COC	55.2%	AC < 125% COC	AC < 125% COC
EJ Population of Concern	--	No	No

AC-1, Census Tract 8, has a percent minority of 19.0% which is below 50% and is below the 125% COC threshold. AC-2, Census Tract 9.03, has a percent minority of 21.8% which is below 50% and is below the 125% COC. Therefore, both AC's do not contain minority populations of EJ concern.

AC-1, Census Tract 8, has a percent low-income of 23.9% which is below 50% and is below the 125% COC threshold. AC-2, Census Tract 9.03, has a percent low-income of 25.4% which is below 50% and is below the 125% COC. Therefore, both AC's do not contain a low-income population of EJ concern.

Conclusion

The census data sheets, map, and calculations can be found in Appendix I. No further environmental justice analysis is warranted.

Relocation of People, Businesses or Farms	Yes	No
Will the proposed action result in the relocation of people, businesses or farms?		X
Is a BIS or CSRS required?		X

Number of relocations: Residences: 0 Businesses: 0 Farms: 0 Other: 0

Discuss any relocations that will occur due to the project. If a BIS or CSRS is required, discuss the results in the discussion below.

No relocations of people, businesses, or farms will take place as a result of this project.

SECTION I – HAZARDOUS MATERIALS & REGULATED SUBSTANCES

Hazardous Materials & Regulated Substances (Mark all that apply)	**Documentation**
Red Flag Investigation (RFI)	X
Phase I Environmental Site Assessment (Phase I ESA)	
Phase II Environmental Site Assessment (Phase II ESA)	
Design/Specifications for Remediation required?	

Date RFI concurrence by INDOT SAM (if applicable): Des. No. 1800199: December 11, 2019
Des. No. 1800086: March 18, 2021

Include a summary of the potential hazardous material concerns found during review. Discuss in depth sites found within, directly adjacent to, or ones that could impact the project area. Refer to current INDOT SAM guidance. If additional documentation (special provisions, pay quantities, etc.) will be needed, include in discussion. Include applicable commitments.

Based on a review of GIS and available public records, a RFI for Des. No. 1800199 was completed by CMT and approved by INDOT Site Assessment and Management (SAM) on December 11, 2019 (Appendix E, pages E-1 to E-15). Two (2) State Cleanup Sites, four (4) Institutional Control sites, four (4) underground storage tank (UST) sites, thirteen (13) leaking UST (LUST) sites, one (1) brownfield site, and two (2) National Pollutant Discharge Elimination System (NPDES) facilities are located within 0.5 mile of the project area. None of the hazmat sites identified will impact the project. Further investigation for hazardous material concerns is not required at this time.

Based on a review of GIS and available public records, a RFI for Des. No. 1800086 was completed by CMT and approved by INDOT SAM on March 18, 2021 (Appendix E, pages E-16 to E-25). One (1) State Cleanup Site, three (3) Institutional Control sites, four (4) UST sites, eight (8) LUST sites, one (1) Voluntary Remediation Program site, and one (1) NPDES Facilities are located within 0.5 mile of the project area.

Based on an updated review of the GIS database on March 27, 2023, there are no additional hazardous material sites located within or adjacent to the project areas for Des. No 1800199 or 1800086.

The UST site, IU UOEHS (2735 East 10th Street, Bloomington, IN 47408; AI ID 12651) is located within the project area. In addition to petroleum contamination, it is likely that lead would be in the soil/ groundwater. If excavation occurs in this area, it is likely that petroleum contamination will be encountered. Before proper removal and disposal of soil and/or groundwater, analysis for lead will be necessary.

The State Cleanup and Institutional Control site, former Courtesy Cleaners (2604 East 10th Street, Bloomington, IN, AI ID 40433) is located within the project area in the southeast corner of the SR 45 and SR 46 intersection. A No Further Action determination letter was issued by IDEM on July 29, 2013. Low levels of soil and groundwater contamination remain on site. An ERC was placed on the property on May 13, 2013. The ERC prohibits the use of groundwater for the entire property, but not soil; use of soil is restricted in a smaller area located behind the existing building, adjacent north of the existing railroad tracks. It does not appear as though residual dissolved chlorinated solvents extend into the project area; however, if the scope of work or extents of excavation should change, coordination with INDOT SAM will occur. The IDEM Office of Land Quality State Cleanup Program was sent an information letter on April 27, 2021 requesting comments regarding any possible environmental effects associated with this project and to determine if any further steps need to take place in regards to the Institutional Control/State Cleanup site. IDEM responded on April 29, 2021 indicating that there does not appear to be any potential risks associated. The chlorinated impacts were detected in the rear portion of where the former dry-cleaning facility was located. The chlorinated impacted groundwater plume was monitoring and was determined to be stable and not migrating with the southeasterly groundwater flow direction (Appendix E, pages E-26 to E-30). Therefore, no impact is expected.

Part IV – Permits and Commitments

PERMITS CHECKLIST

Permits (mark all that apply)	**Likely Required**
Army Corps of Engineers (404/Section10 Permit)	
Nationwide Permit (NWP)	
Regional General Permit (RGP)	
Individual Permit (IP)	
Other	
IN Department of Environmental Management (401/Rule 5)	
Nationwide Permit (NWP)	
Regional General Permit (RGP)	
Individual Permit (IP)	
Isolated Wetlands	
Rule 5	X
Other	
IN Department of Natural Resources	
Construction in a Floodway	
Navigable Waterway Permit	
Other	
Mitigation Required	
US Coast Guard Section 9 Bridge Permit	
Others (Please discuss in the discussion below)	

List the permits likely required for the project and summarize why the permits are needed, including permits designated as "Other."

The project lies within the Bloomington-Ellettsville UAB. Post construction Storm Water Quality Best Management Practices (BMPs) may be required.

A permit determination was reviewed by INDOT ESD EWPO on February 9, 2021; a Construction Stormwater General Permit (CSGP), formerly known as Rule 5, will be required since greater than one acre of land will be disturbed. The Bloomington MS4 is a Certified Construction Program and will have jurisdiction over the CSGP review. It will be the responsibility of the designer to submit plans to the MS4 to process any necessary permits. Once any necessary permits are obtained, they will be submitted to the INDOT Contracts Division prior to the construction of the project. The conditions of the permit will be requirements of the project.

Applicable recommendations provided by resource agencies are included in the Environmental Commitments section of this document. If permits are found to be necessary, the conditions of the permit will be requirements of the project and will supersede these recommendations.

It is the responsibility of the project sponsor to identify and obtain all required permits.

ENVIRONMENTAL COMMITMENTS

List all commitments and include the name of agency/organization requesting/requiring the commitment(s). Listed commitments should be numbered.

All commitments apply to both projects, unless otherwise specified.

Firm:

1) If the scope of work or permanent or temporary right-of-way amounts change, the INDOT Environmental Services Division (ESD) and the INDOT District Environmental Section will be contacted immediately. (INDOT ESD and INDOT Seymour District)
2) It is the responsibility of the project sponsor to notify school corporations and emergency services at least two weeks prior to any construction that would block or limit access. (INDOT ESD)
3) It is the responsibility of the project sponsor to notify Indiana University, Bloomington Restorations and Bloomington Transit at least two weeks prior to any construction that would block or limit access. (INDOT ESD)
4) General AMM 1: Ensure all operators, employees, and contractors working in areas of known or presumed bat habitat are aware of all FHWA/FRA/FTA (Transportation Agencies) environmental commitments, including all applicable AMMs. (USFWS)
5) Lighting AMM 1: Direct temporary lighting away from suitable habitat during the active season. (USFWS)
6) Lighting AMM 2: When installing new or replacing existing permanent lights, use downward-facing, full cut-off lens lights (with same intensity or less for replacement lighting); or for those transportation agencies using the BUG system developed by the Illuminating Engineering Society, be as close to 0 for all three ratings with a priority of "uplight" of 0 and "backlight" as low as practicable. (USFWS)
7) Hibernacula AMM 1: For projects located within karst areas, on-site personnel will use best management practices, secondary containment measures, or other standard spill prevention and countermeasures to avoid impacts to possible hibernacula. Where practicable, a 300 foot buffer will be employed to separate fueling areas and other major containment risk activities from caves, sinkholes, losing streams, and springs in karst topography. (USFWS)
8) Tree Removal AMM 1: Modify all phases/aspects of the project (e.g., temporary work areas, alignments) to avoid tree removal. (USFWS, Des. No. 1800199 only)
9) Tree Removal AMM 2: Apply time of year restrictions for tree removal when bats are not likely to be present, or limit tree removal to 10 or fewer trees per project at any time of year within 100 feet of existing road/ rail surface and outside of documented roosting/foraging habitat or travel corridors; visual emergence survey must be conducted with no bats observed. (October 1 to March 30). (USFWS and IDNR-DFW), Des. No. 1800199 only)
10) Tree Removal AMM 3: Ensure tree removal is limited to that specified in project plans and ensure that contractors understand clearing limits and how they are marked in the field (e.g., install bright colored flagging/fencing prior to any tree clearing to ensure contractors stay within clearing limits). (USFWS, Des. No. 1800199 only)
11) Tree Removal AMM 4: Do not remove documented Indiana bat or NLEB roosts that are still suitable for roosting, or trees within 0.25 miles of roosts, or documented foraging habitat any time of year. (USFWS, Des. No. 1800199 only)
12) The project is located in the karst area of Indiana. If any karst features are encountered, a karst survey should be conducted, with mitigations measures as necessary, in accordance with the most current *Protection of Karst Features during Project Development and Construction* procedures. (USFWS)
13) The Indiana Department of Transportation (INDOT) will build an ADA compliant sidewalk along the south side of 10th Street/State Road 45 and doing so in such a way as to minimize the need for grading in front of the Hinkle-Garton Farmstead. The following items concerning the construction of the sidewalk are noted on the plan sheets:
    i. Care will be made to avoid disturbances of roots of the row of mature maple trees that line the frontage and will provide a separation between the highway and the farmstead.
    ii. Care will be made to avoid disturbing the historic garage structure adjacent to the roadway, limestone marker broken off at ground level about 50 feet east of the carriage house/garage, limestone post on the east side of the driveway to the main house and the northwest corner of the garage. (SHPO)
14) INDOT will provide reimbursement to Bloomington Restorations, Inc., property owner of the Hinkle-Garton Farmstead, for the rehabilitation/repair and repainting of the historic main house on the property. The cost is estimated at approximately $40,000.00. This work will be done before the intersection improvements begin and payment to Bloomington Restorations, Inc. will be made via reimbursement in an amount not to exceed $40,000.00. The reimbursement will be provided through the execution of an agreement between INDOT and Bloomington Restorations, Inc. (INDOT)

15) INDOT will ensure the approximate 150-foot existing wood fence located along SR 45 (10th Street) east of the barn to about 350 feet west of N Pete Ellis Dr. will be relocated and reset in consultation with property owner, Bloomington Restorations, Inc. (SHPO)
16) Tree Clearing and Replacement (SHPO)
    i. INDOT and/or its representatives shall consult with the property owners of the Hinkle-Garton Farmstead, Bloomington Restorations, Inc., and if appropriate and given consent by the property owner, INDOT and/or its representatives will replace mature trees within the historic boundary of the property that must be removed for the construction of this project.
    ii. INDOT and/or its representatives shall make a good faith effort to replace trees with matching species such as pecan (*Carya illinoinensis*), persimmon (*Diospyros virginiana*), butternut (*Juglans cinerea*), and chestnut (*Castanea*), or an alternative species approved by the property owner, where reasonably feasible.
    iii. INDOT and/or its representatives shall make a good faith effort to replace the trees at a 1:1 ratio or as close to a 1:1 ratio as reasonable.
    iv. When available, but before performing work within the Hinkle-Garton Farmstead historic property boundary, INDOT and/or its representatives shall present a tree clearing and replacement plan to consulting parties.
    v. The tree clearing and replacement plan shall identify the location and species of the trees to be removed as part of this project and the location and species of replacement trees. Trees shall be planted far enough from the sidewalk to minimize debris.
    vi. Indiana SHPO and consulting parties will have thirty (30) days to review and comment on the plans. If the Indiana SHPO does not respond to this submission within thirty (30) days, acceptance will be assumed.
    vii. If the Indiana SHPO or any consulting party responds with recommendations, a good faith effort to accommodate the recommendation will be made. INDOT and/or its representatives will inform the Indiana SHPO and consulting parties of its response to such recommendations and submit any revisions for their records.
    viii. INDOT and/or its contractor shall remove existing vegetation and replant in accordance with the approved tree clearing and replacement plan within 2 years of construction letting. INDOT shall coordinate with Bloomington Restorations, Inc. prior to and during work on the property.
    ix. INDOT and/or its contractor shall inspect and monitor the mitigative plantings following the INDOT Standard Specifications for Care, Inspection, and Replacement of Plant Materials (INDOT Spec 622.18).
    x. Bloomington Restorations, Inc. will provide INDOT and/or its contractor with right-of-entry to the property during mitigation implementation and subsequent monitoring.
    xi. After completion of the replanting of replacement trees, INDOT and/or its representatives will provide documentation to that effect to consulting parties.
17) The STIP/TIP will be updated prior to Ready for Contracts date. (INDOT)
18) The UST site, IU UOEHS (2735 East 10th Street, Bloomington, IN 47408; AI ID 12651) is located within the project area. In addition to petroleum contamination, it is likely that lead would be in the soil/ groundwater. If excavation occurs in this area, it is likely that petroleum contamination will be encountered. Before proper removal and disposal of soil and/or groundwater, analysis for lead will be necessary. (INDOT SAM, Des. No. 1800086 only)

For Further Consideration:

19) Plant five trees, at least 2 inches in diameter-at-breast height, for each tree which is removed that is ten inches or greater in diameter-at-breast height. (INDR-DFW)

Appendix Table of Contents

Appendix A: INDOT Supporting Documentation
CE Level Threshold Table *A-1*

Appendix B: Graphics and Plans
Location Map *B-1*
Aerial Map *B-2*
USGS Topographic Map *B-3*
Photo Orientation Maps *B-4*
Photo Log *B-5*
Project Plan Sheets *B-19*
Maintenance of Traffic Plans *B-42*

Appendix C: Early Coordination
Des No 1800199 Sample Early Coordination Letter *C-1*
Des No 1800199 Early Coordination Letter Recipient List *C-3*
Des No 1800086 Sample Early Coordination Letter *C-7*
Des No 1800086 Early Coordination Letter Recipient List *C-9*
Early Coordination Letter Responses *C-12*
Indiana Department of Environmental Management (IDEM) *C-12*
Indiana Department of Natural Resources (IDNR) - Division of Fish and Wildlife (DFW) *C-26*
Indiana Geological & Water Survey (IGWS) *C-28*
U.S. Fish and Wildlife Service (USFWS) – Bloomington, IN Field Office *C-34*
U.S. Department of Agriculture (USDA) - Natural Resource Conservation Service (NRCS) *C-36*
IDEM Wellhead Protection Area Proximity Determination *C-37*
INDOT Office of Public Hearings *C-38*
Bloomington City Council *C-39*
Bloomington Parks and Recreation Department *C-51*
Monroe County Community School Corporation Director of Transportation *C-53*
Bloomington Transit *C-55*
Bloomington-Monroe County Metropolitan Planning Organization (BMCMPO) *C-58*
Monroe County MS4 Coordinator *C-60*
City of Bloomington, IN Utility Coordination Letter & Response *C-61*
Des No 1800199 USFWS IPaC Official Species List *C-69*
Des No 1800199 USFWS Concurrence Verification Letter for the Indiana Bat & Northern Long-eared Bat *C-76*
Des No 1800086 USFWS IPaC Official Species List *C-89*
Des No 1800086 USFWS Concurrence Verification Letter for the Indiana Bat & Northern Long-eared Bat *C-95*

Appendix D: Section 106 Documentation
800.11 Documentation *D-1*
Signed Finding *D-5*
Consulting Parties Invitation/Correspondence *D-47*
SHPO Concurrence *D-136*
Affidavit of Publication of Legal Notice *D-138*
Executed First Amended Memorandum of Agreement *D-142*

Appendix E: Red Flag Investigation and Hazardous Materials
Des No 1800199 Red Flag Investigation *E-1*
Des No 1800086 Red Flag Investigation *E-16*
IDEM Office of Land Quality State Cleanup Program Coordination *E-26*

Appendix F: Water Resources
Des No 1800199 Waters of the U.S. Report (applicable pages) *F-1*
INDOT Ecology and Waterway Permitting Office Approval Email *F-13*
Des No 1800086 Waters of the U.S. Report (applicable pages) *F-14*
INDOT Ecology and Waterway Permitting Office Approval Email *F-25*
IDNR Floodplain Map *F-26*

Appendix G: Public Involvement
Des No 1800199 Notice of Survey Letter *G-1*
Des No 1800199 Notice of Survey Letter *G-2*

Appendix H: Air Quality
Indiana State Transportation Improvement Program FY 2022-2026 (applicable page) *H-1*
BMCMPO Transportation Improvement Program FY 2022-2026 (applicable pages)……*H-2*

Appendix I: Environmental Justice Analysis
EJ Analysis Tables & Calculations..... *I-1*
U.S. Census Bureau Census Maps *I-2*
U.S. Census Bureau EJ Documentation..... *I-4*

Appendix J: Additional Studies
Section 6(f) LWCF Grants in Monroe County, IN *J-1*
Des No 1800199 Engineer's Assessment (applicable pages).....*J-2*
Des No 1800086 Engineer's Assessment (applicable pages).....*J-68*

SR 45 & Pete Ellis Dr./Discovery Pkwy.
Intersection Improvements and Added Lanes
CE Level 4

APPENDIX A: INDOT SUPPORTING DOCUMENTATION

CMT

Categorical Exclusion Level Thresholds

	PCE	Level 1	Level 2	Level 3	Level 4[1]
Section 106	Falls within guidelines of Minor Projects PA	"No Historic Properties Affected"	"No Adverse Effect"	-	"Adverse Effect" Or Historic Bridge involvement[2]
Stream Impacts[3]	No construction in waterways or water bodies	< 300 linear feet of stream impacts	≥ 300 linear feet of stream impacts	-	USACE Individual 404 Permit[4]
Wetland Impacts[3]	No adverse impacts to wetlands	< 0.1 acre	-	< 1.0 acre	≥ 1.0 acre
Right-of-way[5]	Property acquisition for preservation only or none	< 0.5 acre	≥ 0.5 acre	-	-
Relocations	None	-	-	< 5	≥ 5
Threatened/Endangered Species (Species Specific Programmatic for Indiana bat & northern long eared bat)*	"No Effect", "Not likely to Adversely Affect" (With select AMMs[6])	"Not likely to Adversely Affect" (With any AMMs or commitments)	-	"Likely to Adversely Affect"	Project does not fall under Species Specific Programmatic[7]
Threatened/Endangered Species (Any other species)*	Falls within guidelines of USFWS 2013 Interim Policy or "No Effect"	"Not likely to Adversely Affect"	-	-	"Likely to Adversely Affect"
Environmental Justice	No disproportionately high and adverse impacts	-	-	-	Potential[8]
Sole Source Aquifer	No Detailed Groundwater Assessment	-	-	-	Detailed Groundwater Assessment
Floodplain	No Substantial Impacts	-	-	-	Substantial Impacts
Section 4(f) Impacts	None	-	-	-	Any[9]
Section 6(f) Impacts	None	-	-	-	Any
Permanent Traffic Alteration	None	-	-	-	Any
Noise Analysis Required	No	-	-	-	Yes
Air Quality Analysis Required	No	-	-	-	Yes[10]
Approval Level • **District Env. (DE)** • **Env. Serv. Div. (ESD)** • **FHWA**	Concurrence by DE or ESD	DE or ESD	DE or ESD	DE and/or ESD	DE and/or ESD; and FHWA

[1] Coordinate with INDOT Environmental Services Division. INDOT will then coordinate with the appropriate FHWA Environmental Specialist.
[2] Any involvement with a bridge processed under the Historic Bridge Programmatic Agreement.
[3] Total permanent impacts to streams (linear feet) and wetlands (acres).
[4] US Army Corps of Engineers Individual 404 Permit
[5] Total permanent and temporary right-of-way. This does not include reacquisition of existing apparent right-of-way.
[6] Avoidance and Mitigation Measures (AMMs) determined by the IPAC determination key to be required that are not tree AMMs, bridge AMMs, or structure AMMs.
[7] Projects that do not fall under a Species Specific Programmatic and results in a "Likely to Adversely Affect". Other findings can be processed as a lower level CE.
[8] Potential for causing a disproportionately high and adverse impact.
[9] Section 4(f) use resulting in an Individual, Programmatic, or *de minimis* evaluation. The only exception is a *de minimis* evaluation for historic properties (Effective January 2, 2020). If a historic property *de minimis* and no other use, mark the *None* column.
[10] Hot Spot Analysis and/or MSAT Quantitative Emission Analysis.
* Includes the threatened/endangered species critical habitat
Note: Substantial public or agency controversy may require a higher-level NEPA document.

SR 45 & Pete Ellis Dr./Discovery Pkwy.
Intersection Improvements and Added Lanes
CE Level 4

APPENDIX B: GRAPHICS AND PLANS

CMT

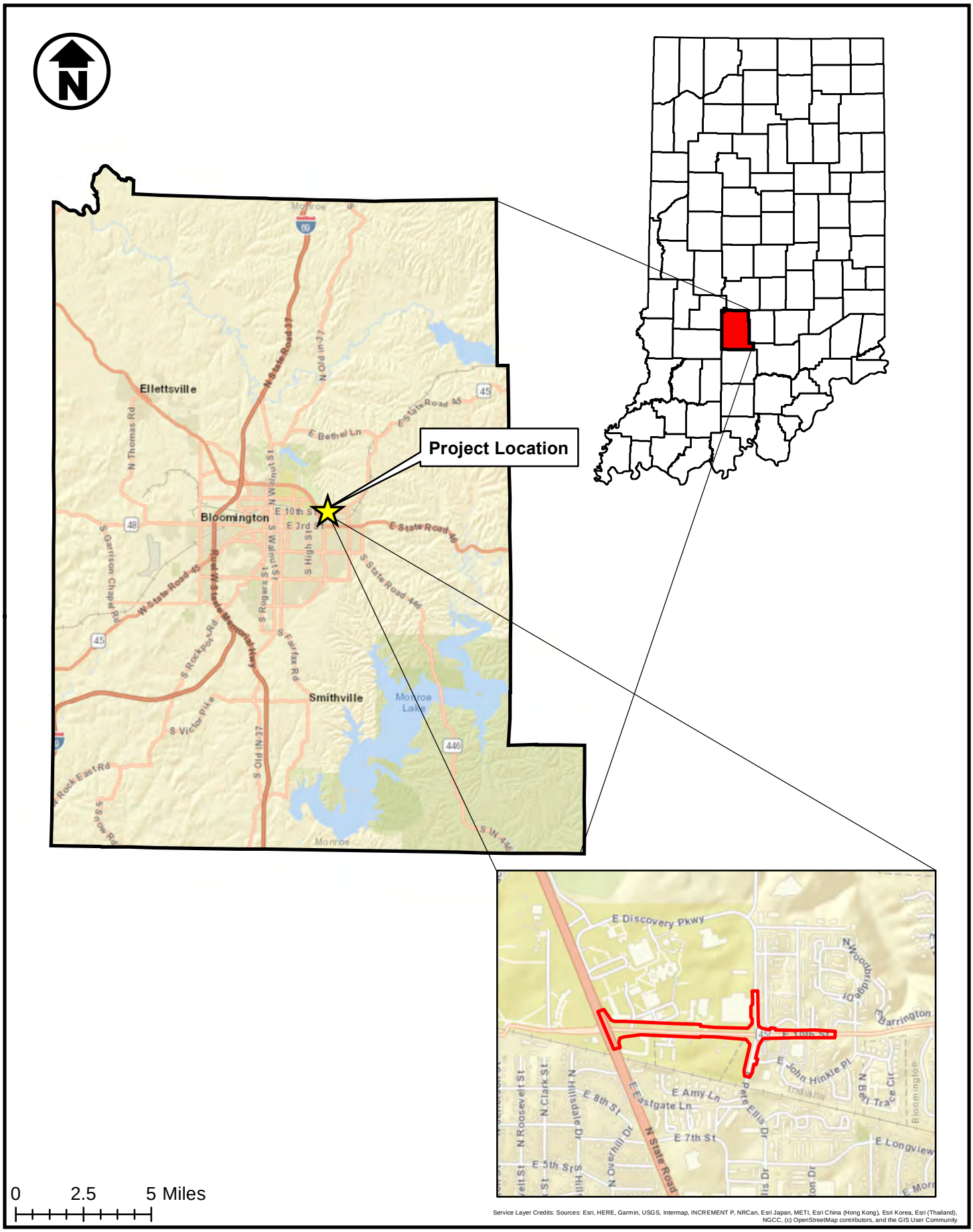

SR 45 & Pete Ellis Dr./Discovery Pkwy. Intersection Improvements and Added Lanes (Des No 1800199/1800086)

Location Map - Monroe Co., IN

CMT
Crawford, Murphy & Tilly

Ellen Hogrebe; 5/28/2020

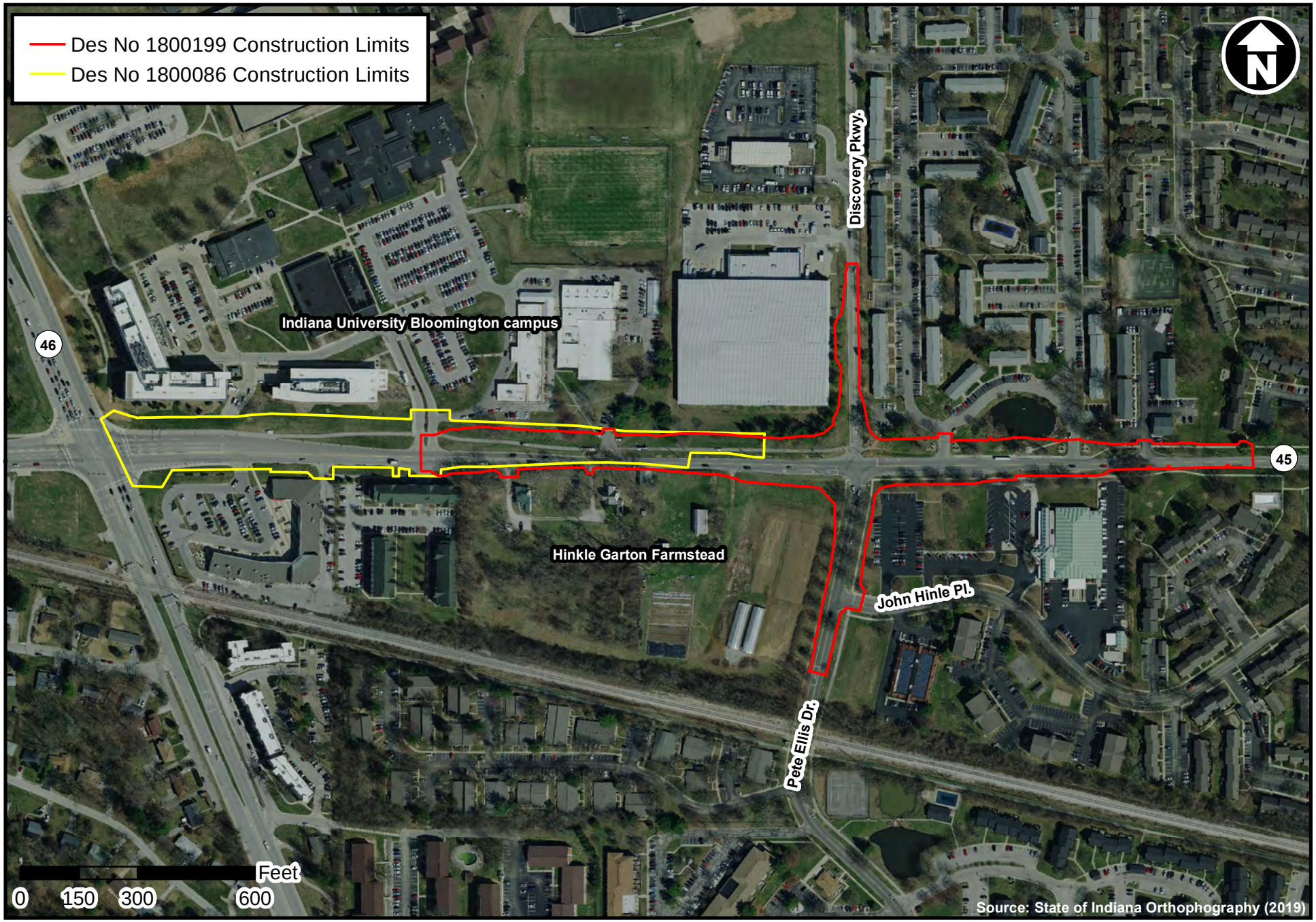

SR 45 & Pete Ellis Dr./Discovery Pkwy. Intersection Improvements and Added Lanes (Des No 1800199/1800086) - Bloomington, Monroe Co., IN

Aerial Map - Construction Limits

Ellen Hogrebe 9/16/2021

CMT
Crawford, Murphy & Tilly

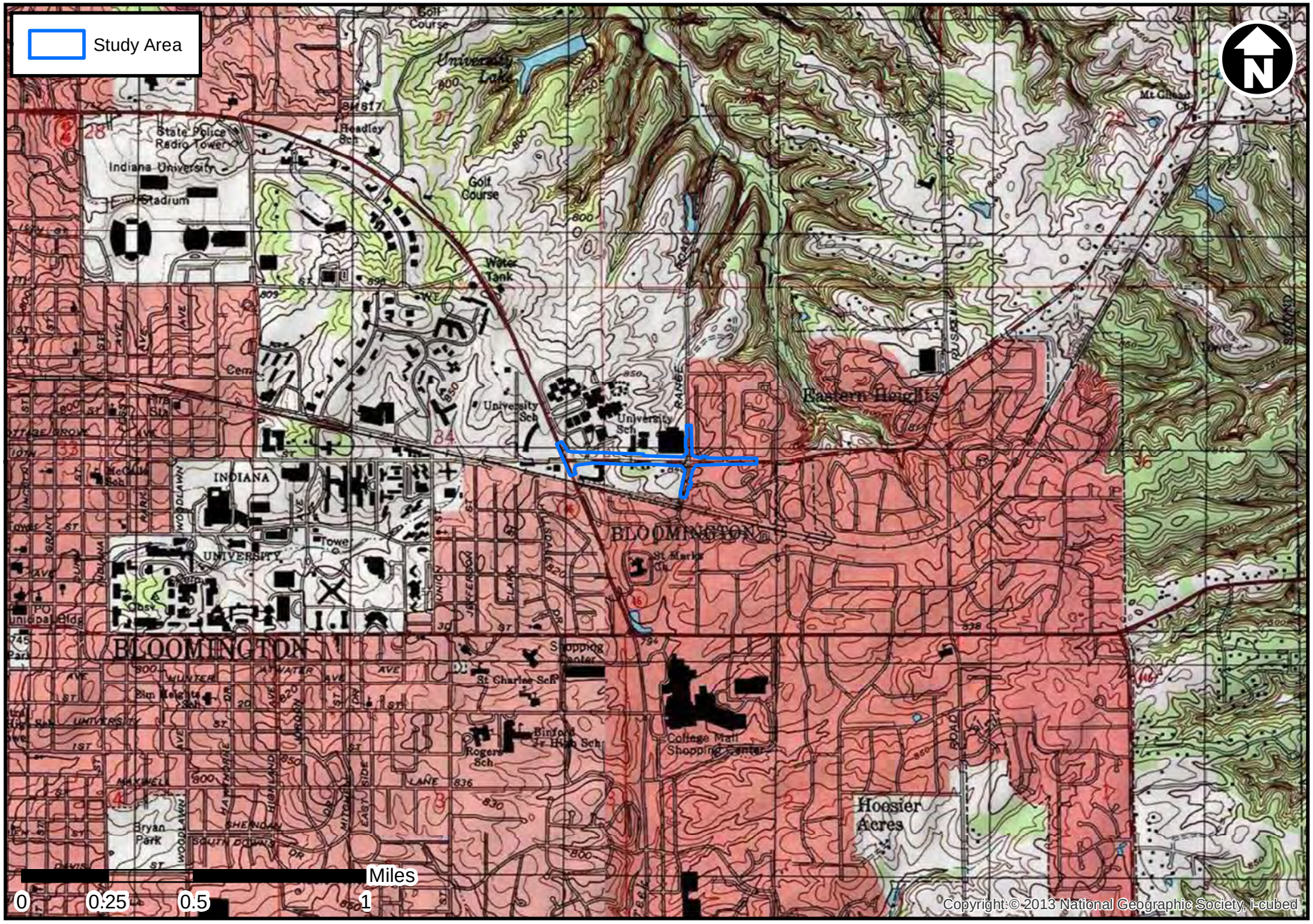

SR 45 & Pete Ellis Dr./Discovery Pkwy. Intersection Improvements and Added Lanes (Des No 1800199/1800086) - Bloomington, Monroe Co., IN

USGS Topographic Map - Unionville, IN Quadrangle

Ellen Hogrebe; 9/16/2021

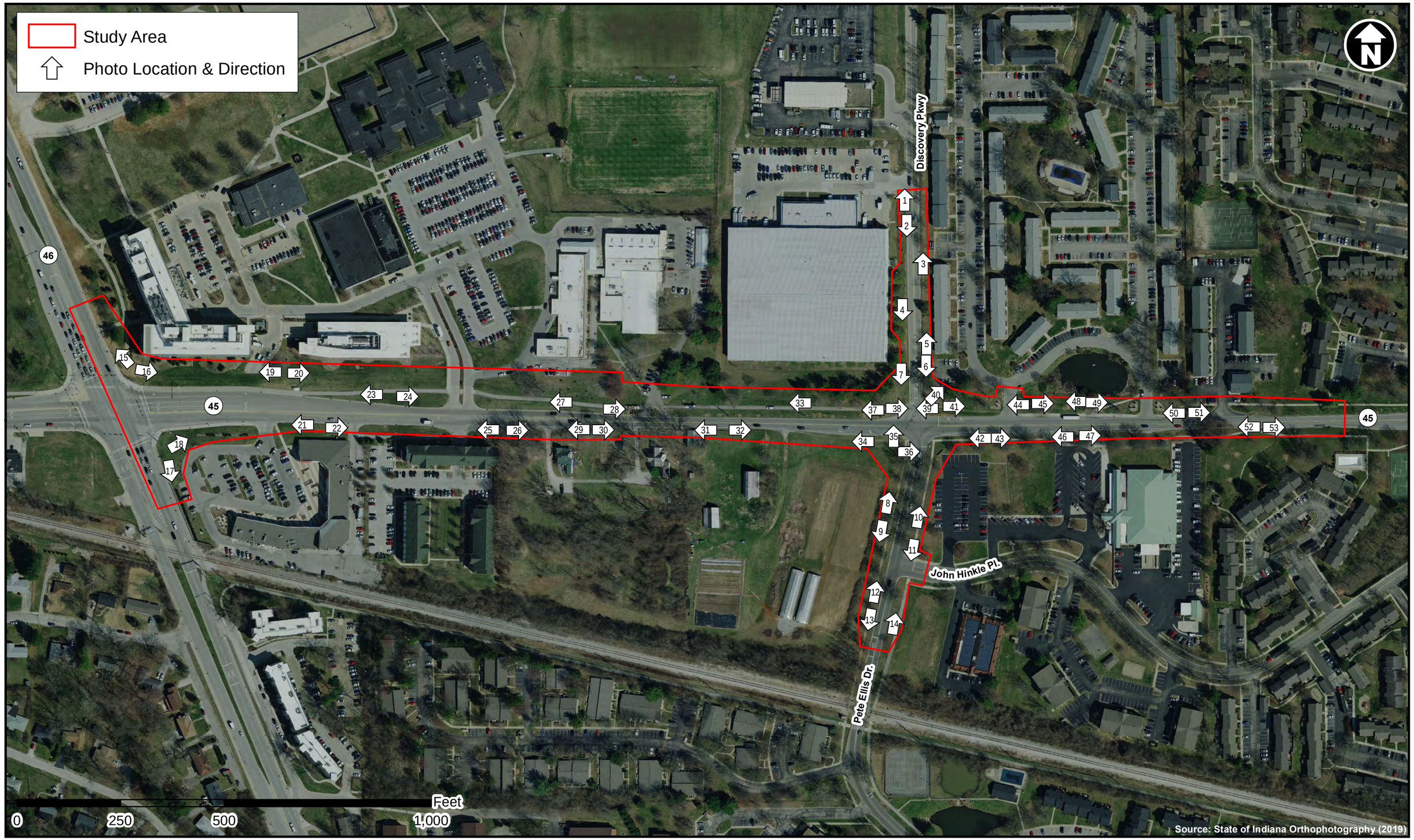

SR 45 & Pete Ellis Dr./Discovery Pkwy. Intersection Improvements and Added Lanes (Des No 1800199/1800086) - Monroe Co., IN

Photo Orientation Map

Author: Ellen Hogrebe 9/13/2021

CMT Crawford, Murphy & Tilly

1. View north along Discovery Parkway. 5/4/2020

2. View south of grass right-of-way along Discovery Parkway. 5/4/2020

3. View north of grass right-of-way along Discovery Parkway. 7/24/2019

4. View south of grass right-of-way and street trees along Discovery Parkway. 7/24/2019

5. View north of grass right-of-way and street trees along Discovery Parkway. 7/24/2019

6. View south along Discovery Parkway towards SR 45 and Pete Ellis Drive/Discovery Parkway intersection. 7/24/2019

7. View south along Discovery Parkway towards SR 45 and Pete Ellis Drive/Discovery Parkway intersection. 7/24/2019

8. View north along Pete Ellis Drive towards SR 45. 7/24/2019

9. View south of property along Pete Ellis Drive. 7/24/2019

10. View north of grass right-of-way, street trees, and sidewalk along Pete Ellis Drive. 7/24/2019

11. View south of grass right-of-way and sidewalk along Pete Ellis Drive towards John Hinkle Place. 7/24/2019

12. View north of grass right-of-way, street trees, and sidewalk along Pete Ellis Drive. 7/24/2019

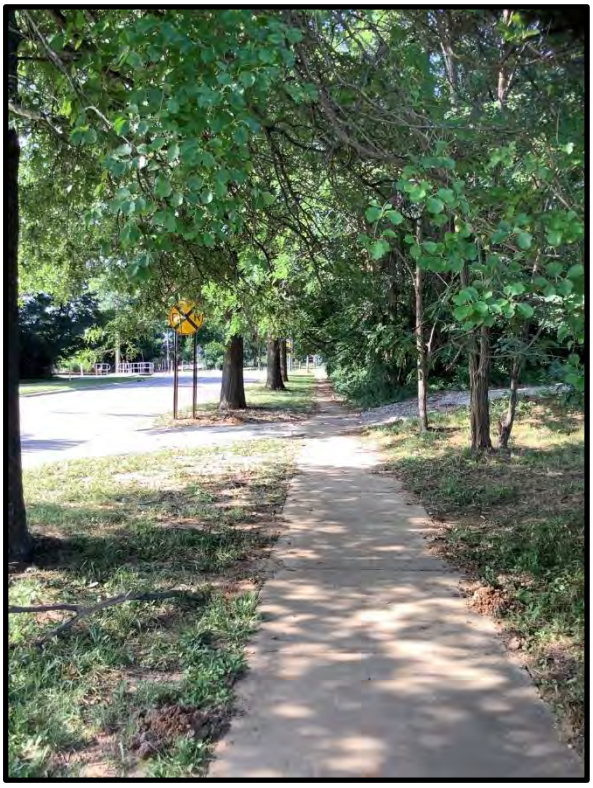

13. View south of grass right-of-way, street trees, and sidewalk along Pete Ellis Drive. 7/24/2019

14. View north of grass right-of-way, street tree, and sidewalk along Pete Ellis Drive. 7/24/2019

15. View of upland area along SR 46 looking northwest. 5/4/2020

16. View of upland area along SR 45 looking east. 5/4/2020

17. View of upland area along SR 46 looking south.
5/4/2020

18. View of upland area along SR 45 looking northeast.
5/4/2020

19. View of upland area along SR 45 looking west.
5/4/2020

20. View of upland area along SR 45 looking east.
5/4/2020

21. View of upland area along SR 45 looking west. 5/4/2020

22. View of upland area along SR 45 looking east. 5/4/2020

23. View of upland area along SR 45 looking west. 5/4/2020

24. View of upland area along SR 45 looking east. 5/4/2020

25. View of upland area along SR 45 looking west. 5/4/2020

26. View of upland area along SR 45 looking east. 5/4/2020

27. View west of grass right-of-way and sidewalk along SR 45. 5/4/2020

28. View east of grass right-of-way and sidewalk along SR 45. 5/4/2020

29. View west of grass right-of-way along SR 45.
5/4/2020

30. View east of grass right-of-way along SR 45.
5/4/2020

31. View west of grass right-of-way along SR 45.
7/24/2019

32. View east of grass right-of-way along SR 45.
7/24/2019

33. View west of grass right-of-way and sidewalk along SR 45. 7/24/2019

34. View west of property along SR 45. 7/24/2019

35. View north towards SR 45 and Pete Ellis Drive/Discovery Parkway intersection. 7/24/2019

36. View west towards Pete Ellis Drive. 7/24/2019

37. View west of grass right-of-way, street trees, and sidewalk along SR 45. 7/24/2019

38. View east along SR 45 towards Discovery Parkway. 7/24/2019

39. View west of sidewalk towards Discovery Parkway. 7/24/2019

40. View northeast of sidewalk and property. 7/24/2019

41. View east of grass right-of-way along SR 45. 7/24/2019

42. View west along SR 45 towards SR 45 and Pete Ellis Drive/Discovery Parkway intersection. 7/24/2019

43. View east of grass right-of-way, street trees, sidewalk along SR 45. 7/24/2019

44. View west of property along SR 45. 7/24/2019

45. View east of property along SR 45. 7/24/2019

46. View west of grass right-of-way and sidewalk along SR 45. 7/24/2019

47. View east of grass right-of-way and sidewalk along SR 45. 7/24/2019

48. View west of property along SR 45. 7/24/2019

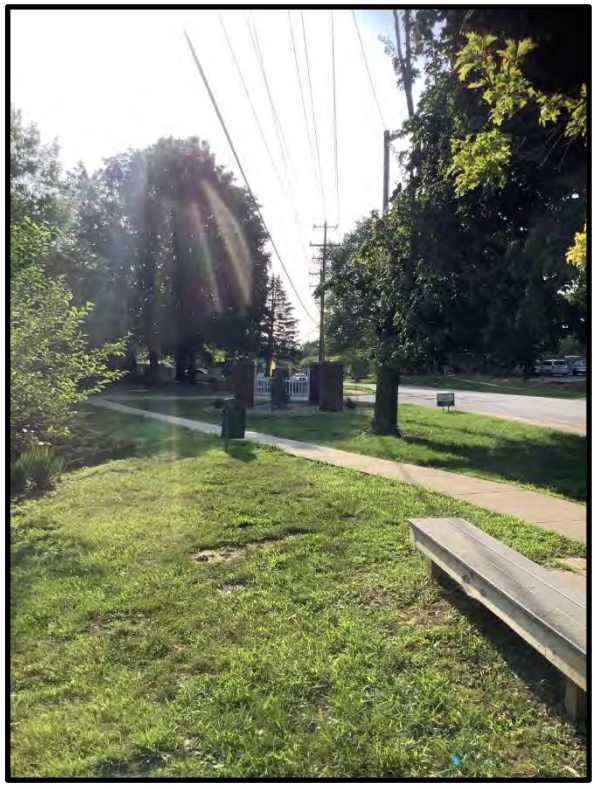

49. View east of property along SR 45.
7/24/2019

50. View west of grass right-of-way along SR 45.
5/4/2020

51. View east along SR 45.
5/4/2020

52. View west of grass right-of-way and sidewalk along SR 45. 5/4/2020

53. View east of grass right-of-way and sidewalk along SR 45. 5/4/2020

PROJECT	DESIGNATION
1800199	1800199
CONTRACT	
R-41465	

INDIANA DEPARTMENT OF TRANSPORTATION

RIGHT-OF-WAY PLANS

TRAFFIC DATA		Pete Ellis Dr	Discovery Pkwy	SR 45
A.A.D.T.	(2018)	3,100 V.P.D.	1,900 V.P.D.	12,400 V.P.D.
A.A.D.T.	(2043)	5,000 V.P.D.	3,000 V.P.D.	16,000 V.P.D.
D.H.V	(2043)	390 V.P.H.	590 V.P.H.	1,800 V.P.H.
DIRECTIONAL DISTRIBUTION		50 %	50 %	50 %
TRUCKS		2.0 % A.A.D.T.	3.5 % A.A.D.T.	4.7 % A.A.D.T.
		1.0 % D.H.V.	1.0 % D.H.V.	2.6 % D.H.V.

DESIGN DATA	Pete Ellis Dr	Discovery Pkwy	SR 45
DESIGN SPEED	30 M.P.H.	35 M.P.H.	40 M.P.H.
PROJECT DESIGN CRITERIA	4R (NON-FREEWAY)	4R (NON-FREEWAY)	4R (NON-FREEWAY)
FUNCTIONAL CLASSIFICATION	MINOR COLLECTOR (URBAN)	LOCAL (URBAN)	MINOR ARTERIAL (URBAN)
RURAL/URBAN	URBAN (INTERMEDIATE)	URBAN (INTERMEDIATE)	URBAN (INTERMEDIATE)
TERRAIN	LEVEL	LEVEL	LEVEL
ACCESS CONTROL	NONE	NONE	NONE

ROUTE: SR 45 AT PETE ELLIS DRIVE /DISCOVERY PARKWAY

PROJECT NO. 1800199 P.E.
1800199 R/W
1800199 CONST.

Intersection Improvement project at
SR 45 and Pete Ellis Drive/Discovery Parkway, located in The City of Bloomington, Indiana
Section 35, T-9-N, R-1-W, Bloomington Township, Monroe County, Indiana

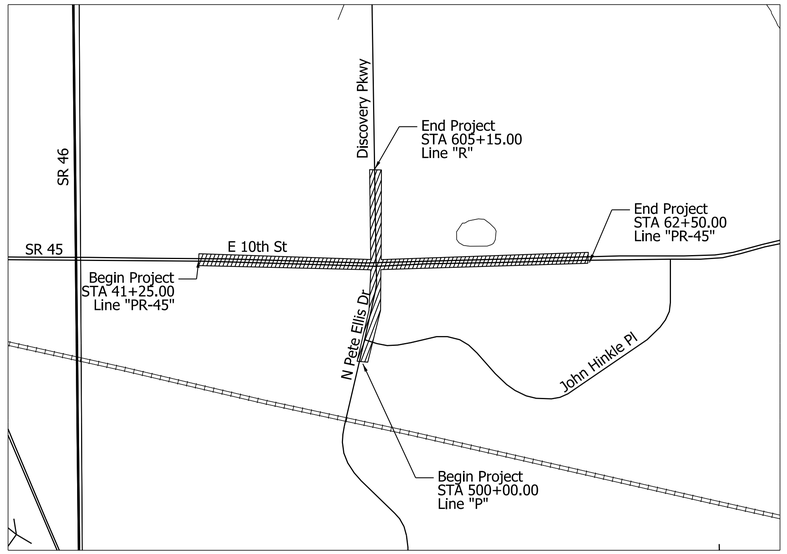

Project Area

Location Map
Monroe County
Scale: 1" = 4000'

PROJECT LOCATION SHOWN BY
MONROE COUNTY

LATITUDE: 39°10'17"N LONGITUDE: 86°29'42"W

GROSS LENGTH: 0.40 MI.
NET LENGTH: 0.40 MI.
MAX. GRADE: 6.2% %

PRELIMINARY RIGHT-OF-WAY PLANS
3/20/2023

INDIANA DEPARTMENT OF TRANSPORTATION
STANDARD SPECIFICATIONS DATED 2020
TO BE USED WITH THESE PLANS

CMT
Engineers and Consultants
8790 PURDUE ROAD
INDIANAPOLIS, IN 46268-6128
PHONE: (317) 298-4500

Copyright CMT, Inc.

NOT FOR CONSTRUCTION

PLANS PREPARED BY: CRAWFORD, MURPHY & TILLY INC. (317) 298-4500 PHONE NUMBER
CERTIFIED BY: 3/20/2023 DATE
APPROVED FOR LETTING: INDIANA DEPARTMENT OF TRANSPORTATION DATE

BRIDGE FILE
N/A
DESIGNATION
1800199

SURVEY BOOK	SHEETS		
Electronic	1	of	29
CONTRACT	PROJECT		
R-41465	1800199		

PlotSCALE=1:1 PlotDATE=$DATE$ PlotTIME=$TIME$ PlotUSER=AM_PM
File: L:\INDOT\18070904-10\Draw\Sheets\RW_Sht_Title.dgn
Model: $MODEL_NAME$

UTILITIES

Duke Energy- Eletric
Cindy Rowland
390 N. Main Street
Martinsville, IN 46151
(317) 776-5341
cindy.rowland@duke-energy.com

Zayo Bandwidth
Waylon Higgins
8209 Castlegate Drive
Indianapolis, IN 46256
(765) 341-1199
waylon.higgins@zayo.com

AT&T Distribution
Mattew Spindler
240 N. Meridian Street
Indianapolis, IN 46204
(317) 265-3050
ms4822@att.com

Smithville Communications
Kimberly Pitcher
1600 W. Temperance Street
Ellettsville, IN 47429
(812) 935-2315
kimberly.pitcher@smithville.com

Bloomington Utilities
Phil Peden
600 E. Miller Road
Bloomington, IN 47402
(812) 349-3634
pedenp@bloominton.in.gov

Bloomington Utilities
Jane Fleig
600 E. Miller Road
Bloomington, IN 47402
(812) 349-3631
fleigi@bloomington.in.gov

Vectren Energy- Gas
Jon Eastham
1800 W. 26th Street
Muncie, IN 47302
(765) 287-2119
publicproject@vectren.com

Duke Energy- Electric
Dewayne Wright
390 N. Main Street
Martinsville, IN 46151
(317) 838-2044
DEI-Tline-Coord@duke-energy.com

Comcast Cable
Rhonda Dalton
688 Industrial Drive
Elmhurst, IL 60126
(224) 229-5863
rhonda.dalton@comcast.com

Lightbound Telecommunications
Ean Elder
731 W. Henry Street
Indianapolis, IN 46201
(317) 508-6346
eelder@lightbound.net

Indiana University
Pankoj K. Patel
820 N. Walnut
Bloomington, IN 47405
(812) 855-7894
ppatel@iu.edu

GENERAL NOTES

All earth shoulders and cut and fill slopes shall be plain or mulch seeded, except where sodding is specified.

The Contractor shall ensure that safe access is maintained to all residences and businesses during all phases of construction.

All removal items not paid for directly will be included in the lump sum cost of "Clearing Right of Way."

It is the Contractor's responsibility to contact any and all utility companies within the limits of the project three weeks prior to any construction.

The Contractor shall verify all drainage structure and pipe types, material, wall thickness, inverts, depths, diameter, sizes and conditions prior to ordering materials for adjustments, connections, extensions or alterations. The Contractor shall assume responsibility for proper fit.

The Contractor shall transition pavement slope through corner radii at a constant rate so as to match the adjacent typical sections. Wedge and level material or other material accepted by the Engineer shall be used as necessary to provide positive drainage of the intersections.

Existing curb types may vary at streets. The Contractor shall inspect curb prior to beginning work to assure proper fit and transition.

The Contractor shall ensure that positive drainage is maintained along curb and gutter flowlines and at intersections after the completion of curb ramp construction.

Sidewalks and curb ramps have been designed to a cross slope of 1.50% or as specified otherwise herein. If field conditions differ, the Contractor shall ensure sidewalk and curb ramp cross slope is no greater than 2.00% in final constructed condition.

INDEX

SHEET NO.	DRAWINGS INDEX
1	TITLE SHEET
2	INDEX & GENERAL NOTES
3 - 8	TYPICAL CROSS SECTIONS
9	LOCATION CONTROL ROUTE SURVEY
10	ALIGNMENT INFORMATION SHEET
11	PLAT NO. 1
12 - 19	PLAN AND PROFILE
20 - 28	RIGHT OF WAY DETAILS
29	APPROACH TABLE

REVISIONS

SHEET NO.	DATE	REVISED

Know what's below. Call before you dig.

NOT FOR CONSTRUCTION

RECOMMENDED FOR APPROVAL _____ DESIGN ENGINEER DATE

DESIGNED: MS 3/20/2023 DRAWN: MM 3/20/2023

CHECKED: KT 3/20/2023 CHECKED: KT 3/20/2023

INDIANA
DEPARTMENT OF TRANSPORTATION

INDEX & GENERAL NOTES

SCALE	BRIDGE FILE
	DESIGNATION
	1800199
SURVEY BOOK	SHEETS
	2 of 29
CONTRACT	PROJECT
R-41465	1800199

PLOTDATE=$DATE$ PLOTTIME=$TIME$ AM_PM

L:\INDOT\18070904-10\Draw\Sheets\RW_Sht_Index.dgn

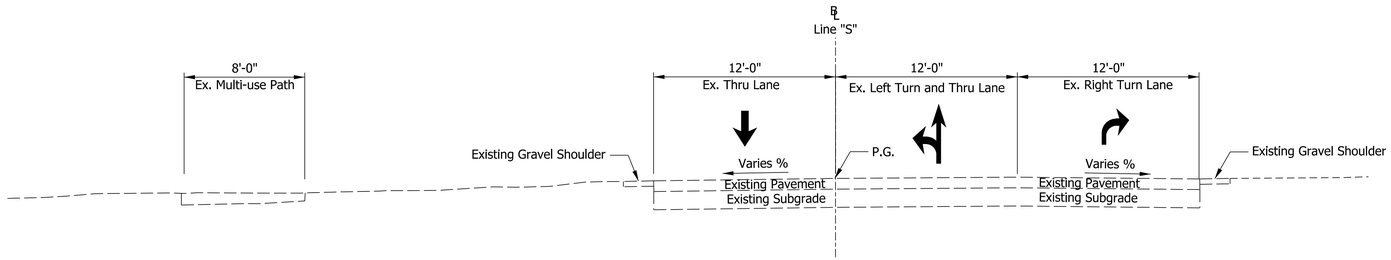

SR 45 TYPICAL SECTION

West of Pete Ellis Dr./Discovery Parkway

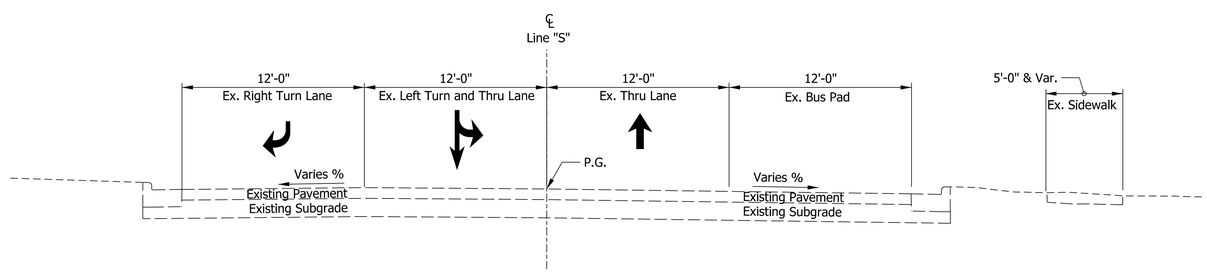

SR 45 TYPICAL SECTION

East of Pete Ellis Dr./Discovery Parkway

NOT FOR CONSTRUCTION

RECOMMENDED FOR APPROVAL — DESIGN ENGINEER — 3/20/2023 DATE

DESIGNED: MS 3/20/2023 | DRAWN: MM 3/20/2023

CHECKED: KT 3/20/2023 | CHECKED: KT 3/20/2023

INDIANA DEPARTMENT OF TRANSPORTATION

EXISTING TYPICAL SECTIONS
LINE "S"

SCALE	BRIDGE FILE
5.0000 ' / in.	N/A
	DESIGNATION
	1800199
SURVEY BOOK	SHEETS
Electronic	3 of 29
CONTRACT	PROJECT
R-41465	1800199

PlotSet: PLOT_DATE$ PLOT_TIME$ AM_PM

L:\INDOT\18070904-10\Draw\Sheets\RW_Sht_Typical Sections.dgn

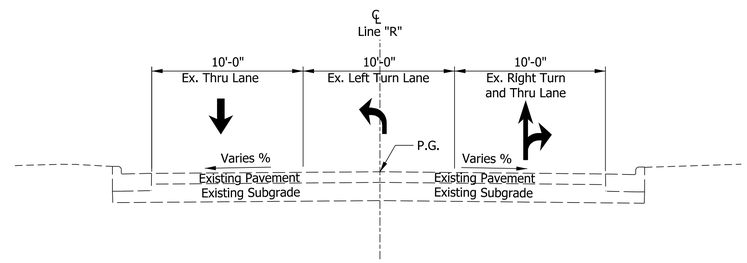

DISCOVERY PARKWAY TYPICAL SECTION

North of SR 45

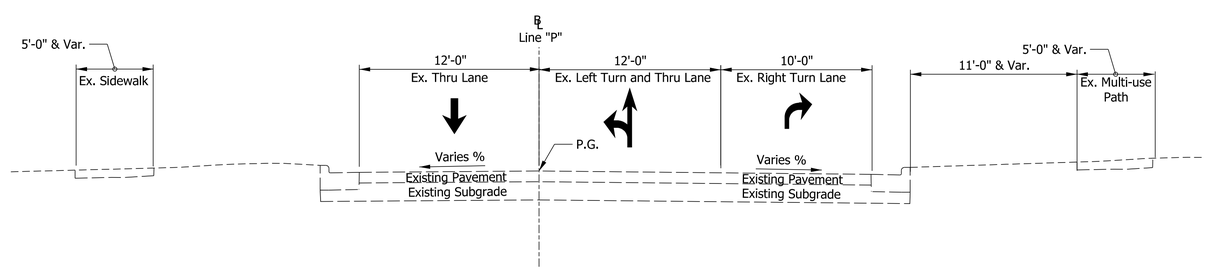

PETE ELLIS DR TYPICAL SECTION

South of SR 45

NOT FOR CONSTRUCTION

RECOMMENDED FOR APPROVAL — DESIGN ENGINEER — DATE 3/20/2023

DESIGNED: MS 3/20/2023 | DRAWN: MM 3/20/2023

CHECKED: KT 3/20/2023 | CHECKED: KT 3/20/2023

INDIANA DEPARTMENT OF TRANSPORTATION

EXISTING TYPICAL SECTIONS
LINE "R" AND LINE "P"

SCALE	BRIDGE FILE
5.0000 ' / in.	N/A
	DESIGNATION
	1800199
SURVEY BOOK	SHEETS
Electronic	4 of 29
CONTRACT	PROJECT
R-41465	1800199

PlotSet: PLOT_DATE$ PLOT_TIME$ AM_PM

L:\INDOT\18070904-10\Draw\Sheets\RW_Sht_Typical Sections.dgn

Note to Reviewer
Pavement Design to be determined by INDOT after Stage 2 submittal.

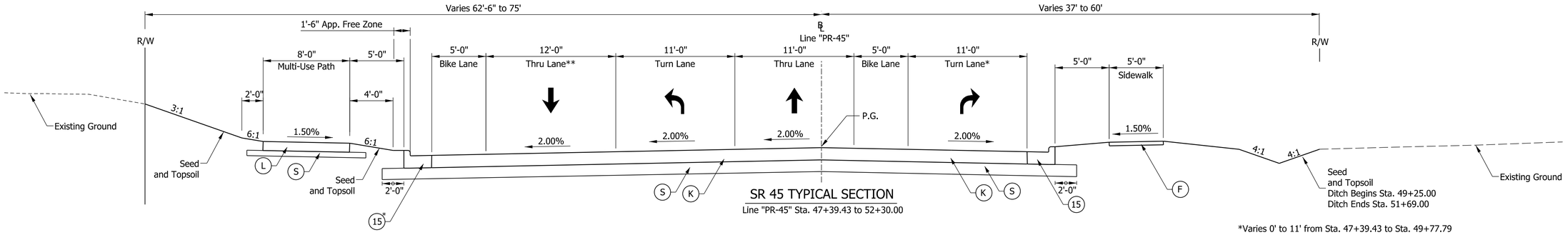

SR 45 TYPICAL SECTION

Line "PR-45" Sta. 47+39.43 to 52+30.00

*Varies 0' to 11' from Sta. 47+39.43 to Sta. 49+77.79

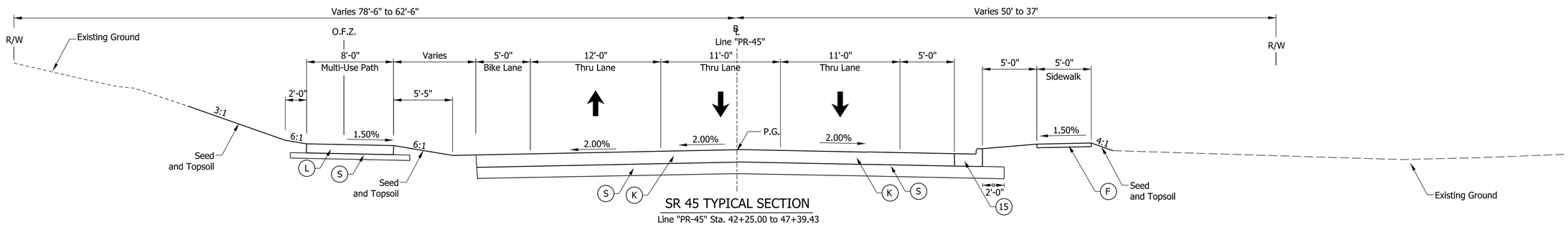

SR 45 TYPICAL SECTION

Line "PR-45" Sta. 42+25.00 to 47+39.43

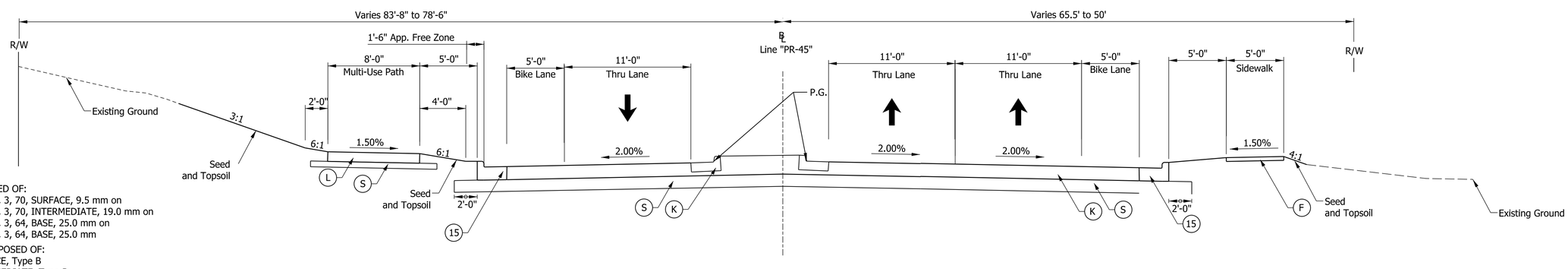

SR 45 TYPICAL SECTION

Line "PR-45" Sta. 41+80.00 to 42+25.00

LEGEND

(K) FULL DEPTH HMA COMPOSED OF:
165 lb/syd QC/QA - HMA, 3, 70, SURFACE, 9.5 mm on
270 lb/syd QC/QA - HMA, 3, 70, INTERMEDIATE, 19.0 mm on
440 lb/syd QC/QA - HMA, 3, 64, BASE, 25.0 mm on
440 lb/syd QC/QA - HMA, 3, 64, BASE, 25.0 mm

(L) MULTI-USE HMA PATH COMPOSED OF:
140 lb/syd - HMA SURFACE, Type B
220 lb/syd - HMA INTERMEDIATE, Type B
6" Compacted Aggregate, No. 53, Base

(R) MILL AND OVERLAY, 1.5" COMPOSED OF:
165 lb/syd QC/QA - HMA, 3, 70, SURFACE, 9.5 mm

(R1) HMA WEDGE AND LEVEL COMPOSED OF:
165 lb/syd QC/QA - HMA, 3, 70, SURFACE, 9.5 mm on
270 lb/syd QC/QA - HMA, 3, 70, INTERMEDIATE, 19.0 mm

(S) SUBGRADE TREATMENT, TYPE IBC

(15) CURB AND GUTTER, CONCRETE

(F) SIDEWALK, CONCRETE

NOT FOR CONSTRUCTION

RECOMMENDED FOR APPROVAL — DESIGN ENGINEER — DATE 3/20/2023

DESIGNED: MS 3/20/2023 | DRAWN: MM 3/20/2023

CHECKED: KT 3/20/2023 | CHECKED: KT 3/20/2023

INDIANA DEPARTMENT OF TRANSPORTATION

PROPOSED TYPICAL SECTIONS
LINE "PR-45"

SCALE	BRIDGE FILE
5.0000 ' / in.	N/A
	DESIGNATION
	1800199
SURVEY BOOK	SHEETS
Electronic	5 of 29
CONTRACT	PROJECT
R-41465	1800199

PLOTSCALE=1 DATE=2023/03/20 TIME=AM_PM

L:\INDOT\18070904-10\Draw\Sheets\RW_Sht_Typical Sections.dgn

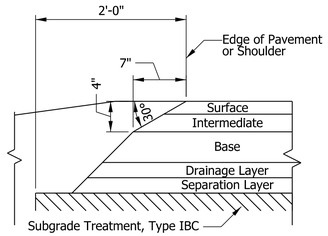

SAFETY EDGE ON HMA PAVEMENT

N.T.S.

Note to Reviewer

Pavement Design to be determined by INDOT after Stage 2 submittal.

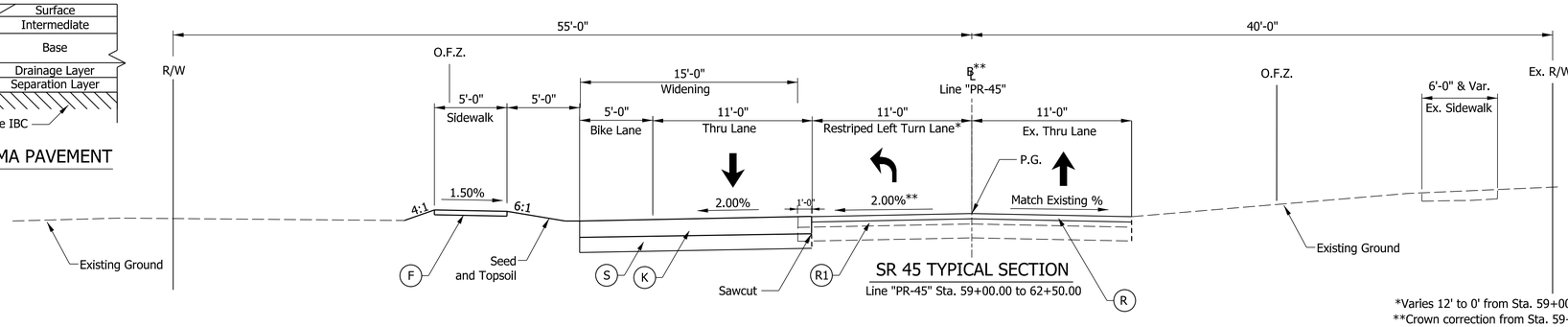

SR 45 TYPICAL SECTION

Line "PR-45" Sta. 59+00.00 to 62+50.00

*Varies 12' to 0' from Sta. 59+00.00 to Sta. 62+50.00
**Crown correction from Sta. 59+00.00 to Sta. 62+50.00
Note: Crown Correcction wil be detailed for contractor in future submission.

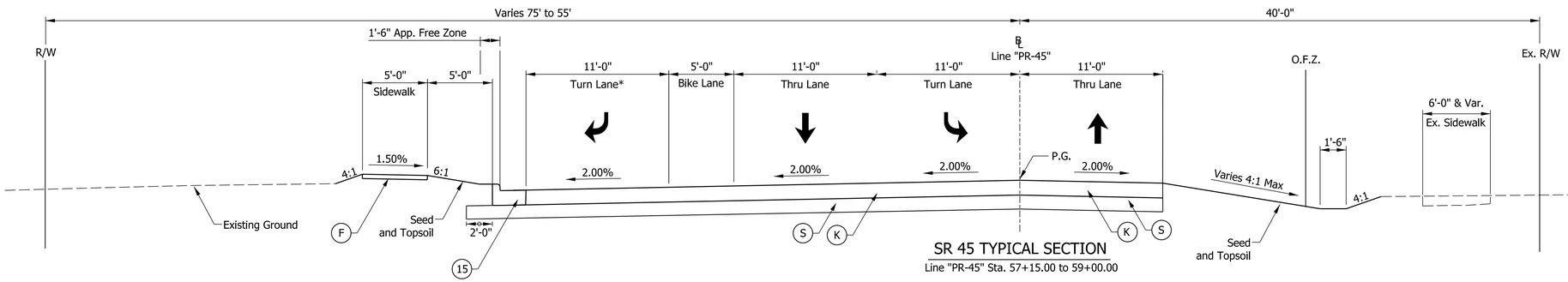

SR 45 TYPICAL SECTION

Line "PR-45" Sta. 57+15.00 to 59+00.00

*Varies 11' to 0' from Sta. 57+44.36 to Sta. 57+87.81

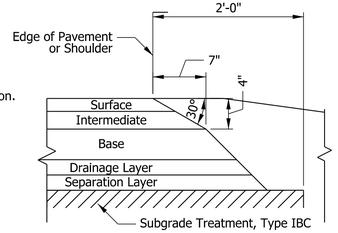

SAFETY EDGE ON HMA PAVEMENT

N.T.S.

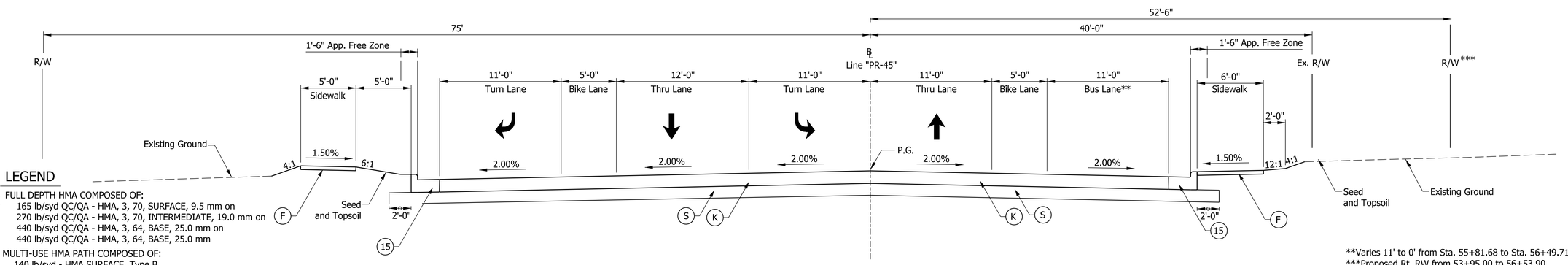

SR 45 TYPICAL SECTION

Line "PR-45" Sta. 52+30.00 to 57+15.00

**Varies 11' to 0' from Sta. 55+81.68 to Sta. 56+49.71
***Proposed Rt. RW from 53+95.00 to 56+53.90

LEGEND

(K) FULL DEPTH HMA COMPOSED OF:
165 lb/syd QC/QA - HMA, 3, 70, SURFACE, 9.5 mm on
270 lb/syd QC/QA - HMA, 3, 70, INTERMEDIATE, 19.0 mm on
440 lb/syd QC/QA - HMA, 3, 64, BASE, 25.0 mm on
440 lb/syd QC/QA - HMA, 3, 64, BASE, 25.0 mm

(L) MULTI-USE HMA PATH COMPOSED OF:
140 lb/syd - HMA SURFACE, Type B
220 lb/syd - HMA INTERMEDIATE, Type B
6" Compacted Aggregate, No. 53, Base

(R) MILL AND OVERLAY, 1.5" COMPOSED OF:
165 lb/syd QC/QA - HMA, 3, 70, SURFACE, 9.5 mm

(R1) HMA WEDGE AND LEVEL COMPOSED OF:
165 lb/syd QC/QA - HMA, 3, 70, SURFACE, 9.5 mm on
270 lb/syd QC/QA - HMA, 3, 70, INTERMEDIATE, 19.0 mm

(S) SUBGRADE TREATMENT, TYPE IBC

(15) CURB AND GUTTER, CONCRETE

(F) SIDEWALK, CONCRETE

NOT FOR CONSTRUCTION

RECOMMENDED FOR APPROVAL — DESIGN ENGINEER — 3/20/2023 DATE

DESIGNED: MS 3/20/2023 | DRAWN: MM 3/20/2023

CHECKED: KT 3/20/2023 | CHECKED: KT 3/20/2023

INDIANA DEPARTMENT OF TRANSPORTATION

PROPOSED TYPICAL SECTIONS
LINE "PR-45"

SCALE	BRIDGE FILE
5.0000 ' / in.	N/A
	DESIGNATION
	1800199
SURVEY BOOK	SHEETS
Electronic	6 of 29
CONTRACT	PROJECT
R-41465	1800199

PLOTTED: 3/20/2023 TIME: AM_PM

L:\INDOT\18070904-10\Draw\Sheets\RW_Sht_Typical Sections.dgn

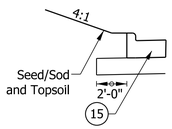

CUT SECTION

Line "R" Sta. 600+89.36 to 602+50

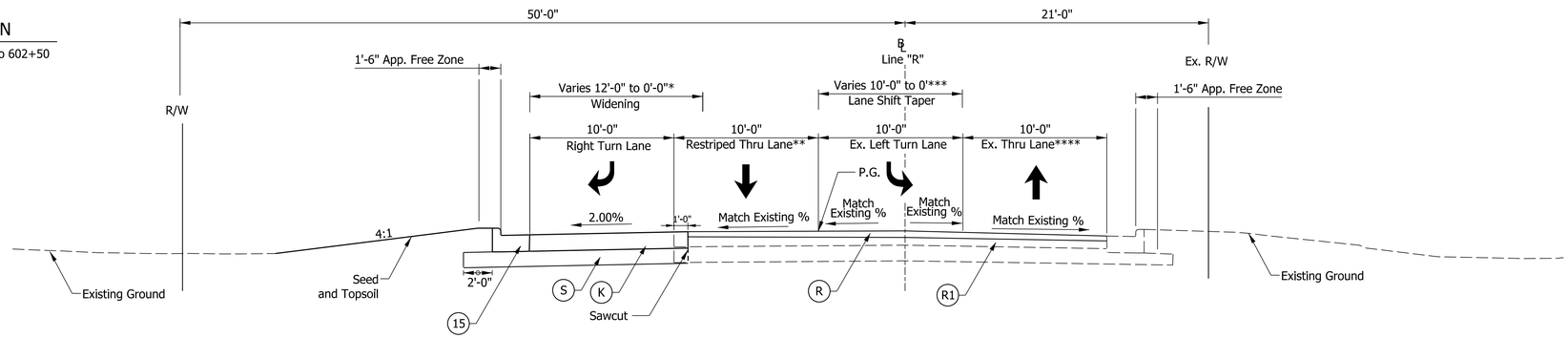

DISCOVERY PARKWAY TYPICAL SECTION

Line "R" Sta. 600+89.36 to 605+15.00

*Varies 12'-0" to 0'-0" from Sta. 600+89.36 to 604+57.62
**Thru Lane widens 10'-0" to 14'-0" to meet Existing Thru Lane from Sta. 604+14.97 to 605+14.97
***Varies 10'-0" to 0'-0" from Sta. 603+14.97 to 604+14.97
****Thru Lane widens 10'-0" to 14'-0" from Sta. 603+14.97 to 605+14.97

Note to Reviewer

Pavement Design to be determined by INDOT after Stage 2 submittal.

After receiving the survey information, the lane width on Discovery Parkway has been revised from 11 feet as suggested in the Engineer's Report to 10 feet due to the width of the existing pavement.

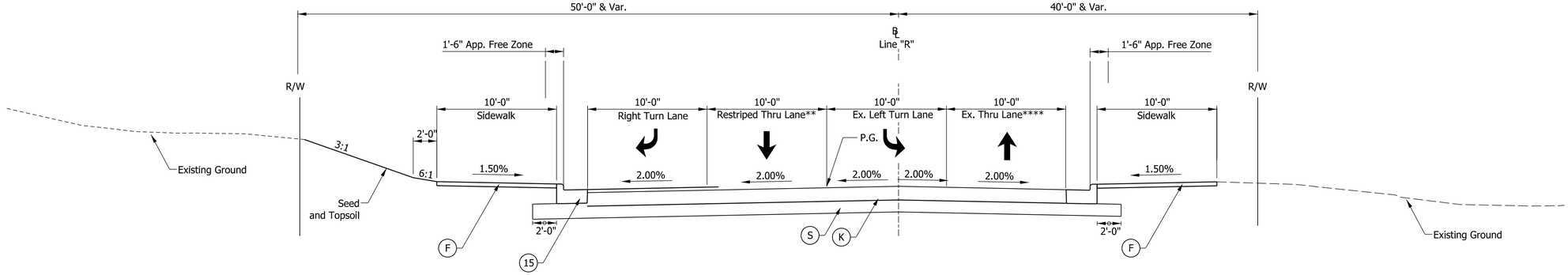

DISCOVERY PARKWAY TYPICAL SECTION

Line "R" Sta. 600+65.64 to 600+89.36

LEGEND

(K) FULL DEPTH HMA COMPOSED OF:
165 lb/syd QC/QA - HMA, 3, 70, SURFACE, 9.5 mm on
270 lb/syd QC/QA - HMA, 3, 70, INTERMEDIATE, 19.0 mm on
440 lb/syd QC/QA - HMA, 3, 64, BASE, 25.0 mm on
440 lb/syd QC/QA - HMA, 3, 64, BASE, 25.0 mm

(L) MULTI-USE HMA PATH COMPOSED OF:
140 lb/syd - HMA SURFACE, Type B
220 lb/syd - HMA INTERMEDIATE, Type B
6" Compacted Aggregate, No. 53, Base

(R) MILL AND OVERLAY, 1.5" COMPOSED OF:
165 lb/syd QC/QA - HMA, 3, 70, SURFACE, 9.5 mm

(R1) HMA WEDGE AND LEVEL COMPOSED OF:
165 lb/syd QC/QA - HMA, 3, 70, SURFACE, 9.5 mm on
270 lb/syd QC/QA - HMA, 3, 70, INTERMEDIATE, 19.0 mm

(S) SUBGRADE TREATMENT, TYPE IBC

(15) CURB AND GUTTER, CONCRETE

(F) SIDEWALK, CONCRETE

NOT FOR CONSTRUCTION

RECOMMENDED FOR APPROVAL — DESIGN ENGINEER — 3/20/2023 DATE

DESIGNED: MS 3/20/2023 | DRAWN: MM 3/20/2023

CHECKED: KT 3/20/2023 | CHECKED: KT 3/20/2023

INDIANA DEPARTMENT OF TRANSPORTATION

PROPOSED TYPICAL SECTIONS
LINE "R"

SCALE	BRIDGE FILE
5.0000 ' / in.	N/A
	DESIGNATION
	1800199
SURVEY BOOK	SHEETS
Electronic	7 of 29
CONTRACT	PROJECT
R-41465	1800199

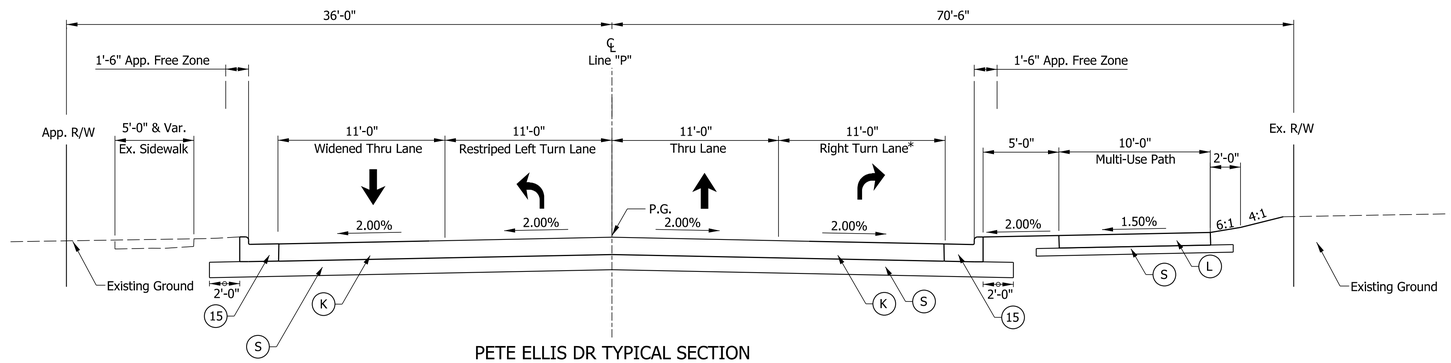

PETE ELLIS DR TYPICAL SECTION

Line "P" Sta. 503+81.55 to 504+84.00

*Lengthen Ex. Right Turn Lane from Sta. 503+81.55 to 504+84.00

Note to Reviewer

Pavement Design to be determined by INDOT after Stage 2 submittal.

After receiving the survey information, the lane width on Discovery Parkway has been revised from 11 feet as suggested in the Engineer's Report to 10 feet due to the width of the existing pavement.

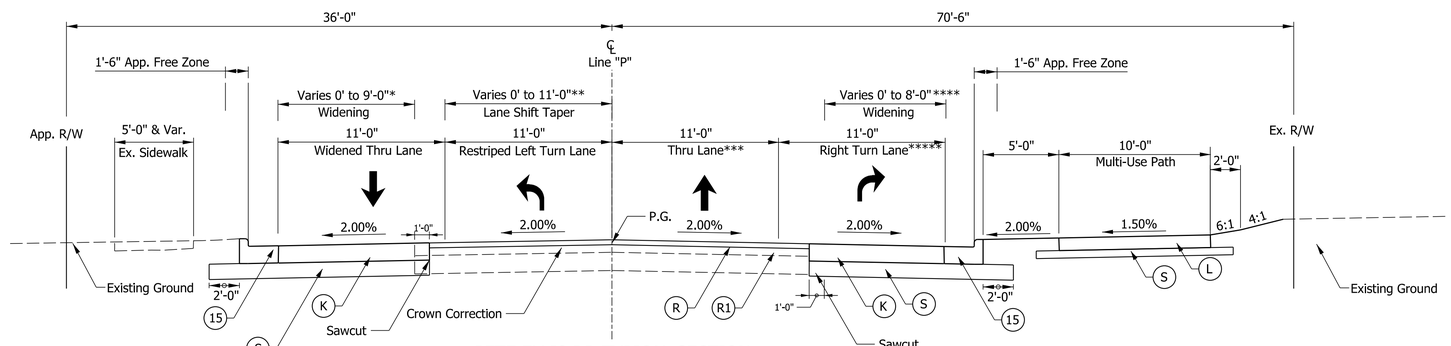

PETE ELLIS DR TYPICAL SECTION

Line "P" Sta. 500+00.00 to 503+81.55

*Varies 0'-0" to 9'-0" from Sta. 500+00.00 to 503+81.55
**Varies 0'-0" to 11'-0" from Sta. 500+64.50 to 501+64.50
***Existing Thru Lane narrows from 12'-0" to 11'-0" from Sta. 500+66.87 to 502+36.82
****Varies 0'-0" to 8'-0" from Sta. 500+66.60 to 503+81.55
*****Lengthen Ex. Right Turn Lane from Sta. 502+36.82 to 503+81.55

LEGEND

(K) FULL DEPTH HMA COMPOSED OF:
165 lb/syd QC/QA - HMA, 3, 70, SURFACE, 9.5 mm on
270 lb/syd QC/QA - HMA, 3, 70, INTERMEDIATE, 19.0 mm on
440 lb/syd QC/QA - HMA, 3, 64, BASE, 25.0 mm on
440 lb/syd QC/QA - HMA, 3, 64, BASE, 25.0 mm

(L) MULTI-USE HMA PATH COMPOSED OF:
140 lb/syd - HMA SURFACE, Type B
220 lb/syd - HMA INTERMEDIATE, Type B
6" Compacted Aggregate, No. 53, Base

(R) MILL AND OVERLAY, 1.5" COMPOSED OF:
165 lb/syd QC/QA - HMA, 3, 70, SURFACE, 9.5 mm

(R1) HMA WEDGE AND LEVEL COMPOSED OF:
165 lb/syd QC/QA - HMA, 3, 70, SURFACE, 9.5 mm on
270 lb/syd QC/QA - HMA, 3, 70, INTERMEDIATE, 19.0 mm

(S) SUBGRADE TREATMENT, TYPE IBC

(15) CURB AND GUTTER, CONCRETE

(F) SIDEWALK, CONCRETE

NOT FOR CONSTRUCTION

RECOMMENDED FOR APPROVAL — DESIGN ENGINEER — DATE 3/20/2023

DESIGNED: MS 3/20/2023 | DRAWN: MM 3/20/2023

CHECKED: KT 3/20/2023 | CHECKED: KT 3/20/2023

INDIANA DEPARTMENT OF TRANSPORTATION

PROPOSED TYPICAL SECTIONS
LINE "P"

SCALE	BRIDGE FILE
5.0000 ' / in.	N/A
	DESIGNATION
	1800199

SURVEY BOOK	SHEETS		
Electronic	8	of	29
CONTRACT	PROJECT		
R-41465	1800199		

PlotSPLOT_DATE$ $PLOT_TIME$ AM_PM

L:\INDOT\18070904-10\Draw\Sheets\RW_Sht_Typical Sections.dgn

LOCATION CONTROL ROUTE SURVEY

FOR INDIANA DEPARTMENT OF TRANSPORTATION (INDOT)
IN ASSOCIATION WITH CRAWFORD MURPHY AND TILLY
STATE ROAD 45 & PETE ELLIS DRIVE
CITY OF BLOOMINGTON, MONROE COUNTY, INDIANA
DES NO. 1800199

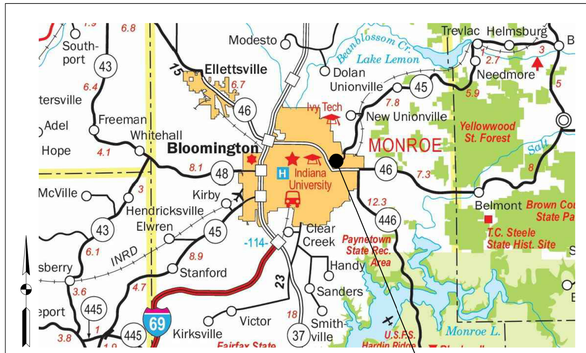

VICINITY MAP
(NOT TO SCALE)

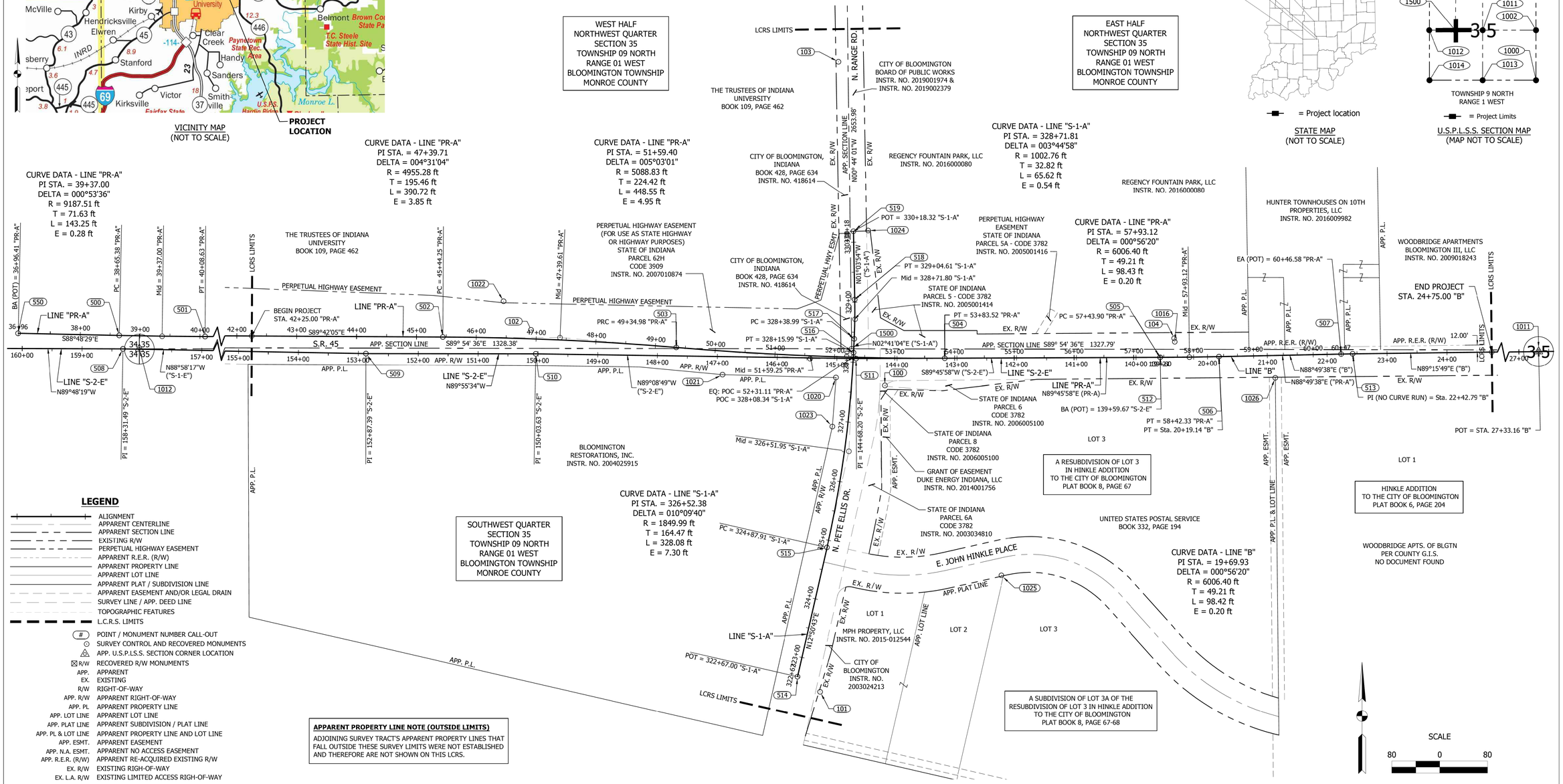

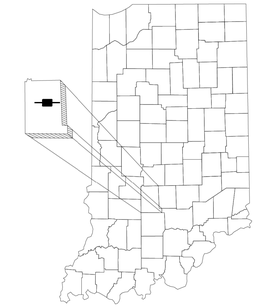

= Project location

STATE MAP
(NOT TO SCALE)

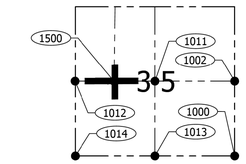

TOWNSHIP 9 NORTH
RANGE 1 WEST

= Project Limits

U.S.P.L.S.S. SECTION MAP
(MAP NOT TO SCALE)

LEGEND

- ALIGNMENT
- APPARENT CENTERLINE
- APPARENT SECTION LINE
- EXISTING R/W
- PERPETUAL HIGHWAY EASEMENT
- APPARENT R.E.R. (R/W)
- APPARENT PROPERTY LINE
- APPARENT LOT LINE
- APPARENT PLAT / SUBDIVISION LINE
- APPARENT EASEMENT AND/OR LEGAL DRAIN
- SURVEY LINE / APP. DEED LINE
- TOPOGRAPHIC FEATURES
- L.C.R.S. LIMITS
- # POINT / MONUMENT NUMBER CALL-OUT
- SURVEY CONTROL AND RECOVERED MONUMENTS
- APP. U.S.P.L.S.S. SECTION CORNER LOCATION
- R/W RECOVERED R/W MONUMENTS
- APP. APPARENT
- EX. EXISTING
- R/W RIGHT-OF-WAY
- APP. R/W APPARENT RIGHT-OF-WAY
- APP. PL APPARENT PROPERTY LINE
- APP. LOT LINE APPARENT LOT LINE
- APP. PLAT LINE APPARENT SUBDIVISION / PLAT LINE
- APP. PL & LOT LINE APPARENT PROPERTY LINE AND LOT LINE
- APP. ESMT. APPARENT EASEMENT
- APP. N.A. ESMT. APPARENT NO ACCESS EASEMENT
- APP. R.E.R. (R/W) APPARENT RE-ACQUIRED EXISTING R/W
- EX. R/W EXISTING RIGH-OF-WAY
- EX. L.A. R/W EXISTING LIMITED ACCESS RIGH-OF-WAY

APPARENT PROPERTY LINE NOTE (OUTSIDE LIMITS)

ADJOINING SURVEY TRACT'S APPARENT PROPERTY LINES THAT FALL OUTSIDE THESE SURVEY LIMITS WERE NOT ESTABLISHED AND THEREFORE ARE NOT SHOWN ON THIS LCRS.

SURVEY STARTED		
2/28/2019		
SURVEY COMPLETED		
5/31/2019		
ROUTE PLAT SHEETS		
1	OF	3

PREPARED BY: Etica GROUP

IN ASSOCIATION WITH: CMT Engineers and Consultants

FIELD SURVEYOR STATEMENT

THIS SURVEY, TO THE BEST OF MY KNOWLEDGE AND BELIEF, IS EXECUTED ACCORDING TO THE PROVISIONS OF TITLE 865 I.A.C. 1-12-20 THROUGH 1-12-25 REGARDING ROUTE SURVEYS, EXCEPT THAT ANY DATA SHOWN REGARDING THE LOCATION OR DESCRIPTION OF THE EXISTING PARCELS IS NOT A PART OF THIS SURVEY.

NICKOLAS M. SCHMITT REGISTERED No. LS21200004 STATE OF INDIANA LAND SURVEYOR

PREPARED BY: Nickolas M. Schmitt, PE, PS 5/12/2020

DRAWN: MMM/NMS CHECKED: NMS

INDIANA DEPARTMENT OF TRANSPORTATION
LOCATION CONTROL ROUTE SURVEY

STATE ROAD 45 AT PETE ELLIS DR.
(LINE "B", LINE "PR-A", & LINE "S-1-A", LINE "S-2-E")

SCALE	BRIDGE FILE		
SEE ABOVE	----		
COUNTY	DESIGNATION		
MONROE	1800199		
SURVEY BOOK	SHEETS		
----	9	of	29
CONTRACT	PROJECT NUMBER		
----	Etica No.: 180097.06		

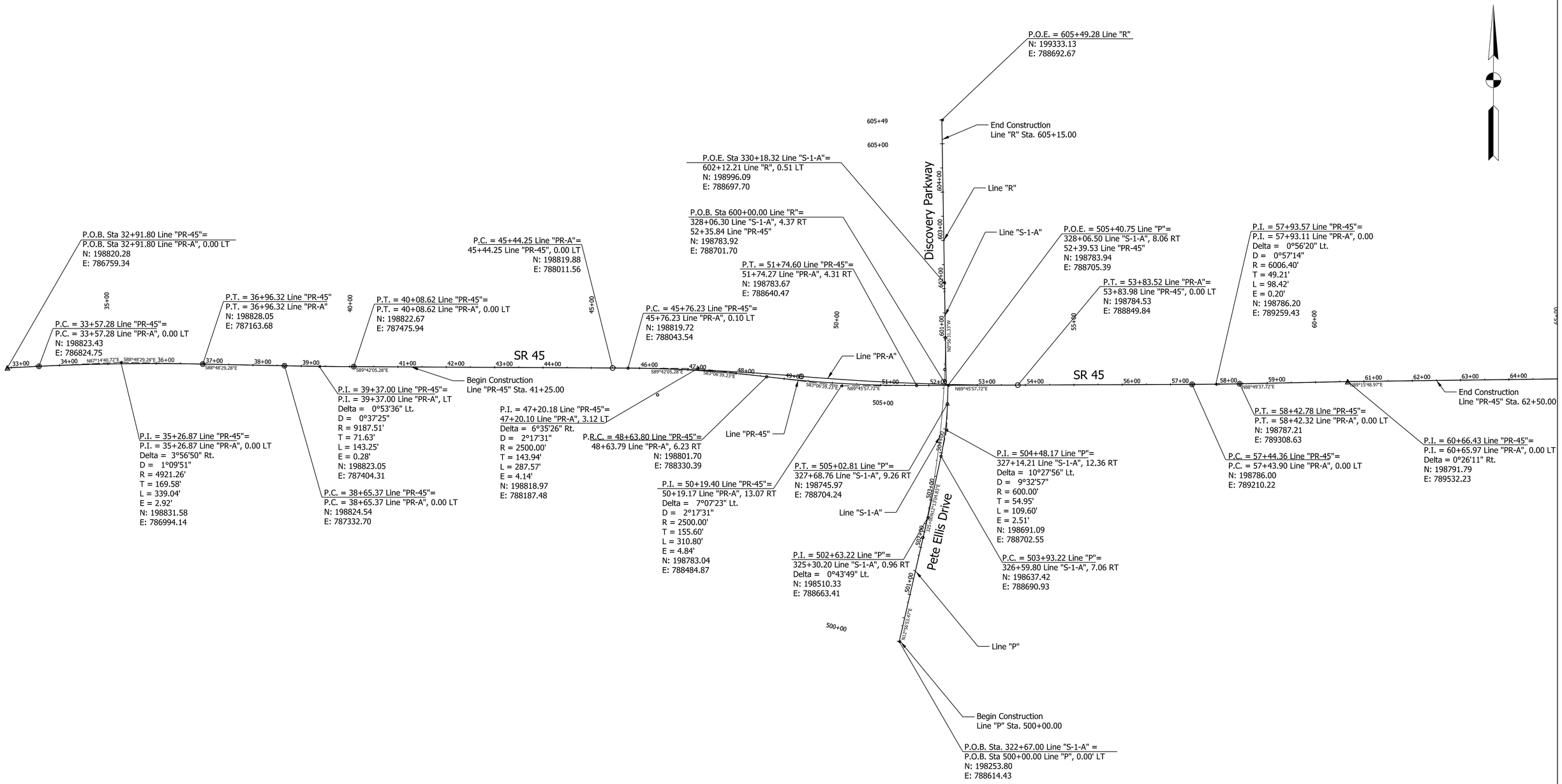

NOT FOR CONSTRUCTION

RECOMMENDED FOR APPROVAL — DESIGN ENGINEER — DATE 3/20/2023

DESIGNED: MS 3/20/2023 | DRAWN: MM 3/20/2023

CHECKED: KT 3/20/2023 | CHECKED: KT 3/20/2023

INDIANA DEPARTMENT OF TRANSPORTATION

ALIGNMENT INFORMATION SHEET

SCALE	BRIDGE FILE
1"=100'	N/A
	DESIGNATION
	1800199

SURVEY BOOK	SHEETS		
Electronic	10	of	29
CONTRACT	PROJECT		
R-41465	1800199		

PLOT_DATE: $CURRENT_TIME$ AM_PM

File: L:\INDOT\18070904-10\Draw\Sheets\RW_Sht_Align_01.dgn
Model:$MODEL_NAME$

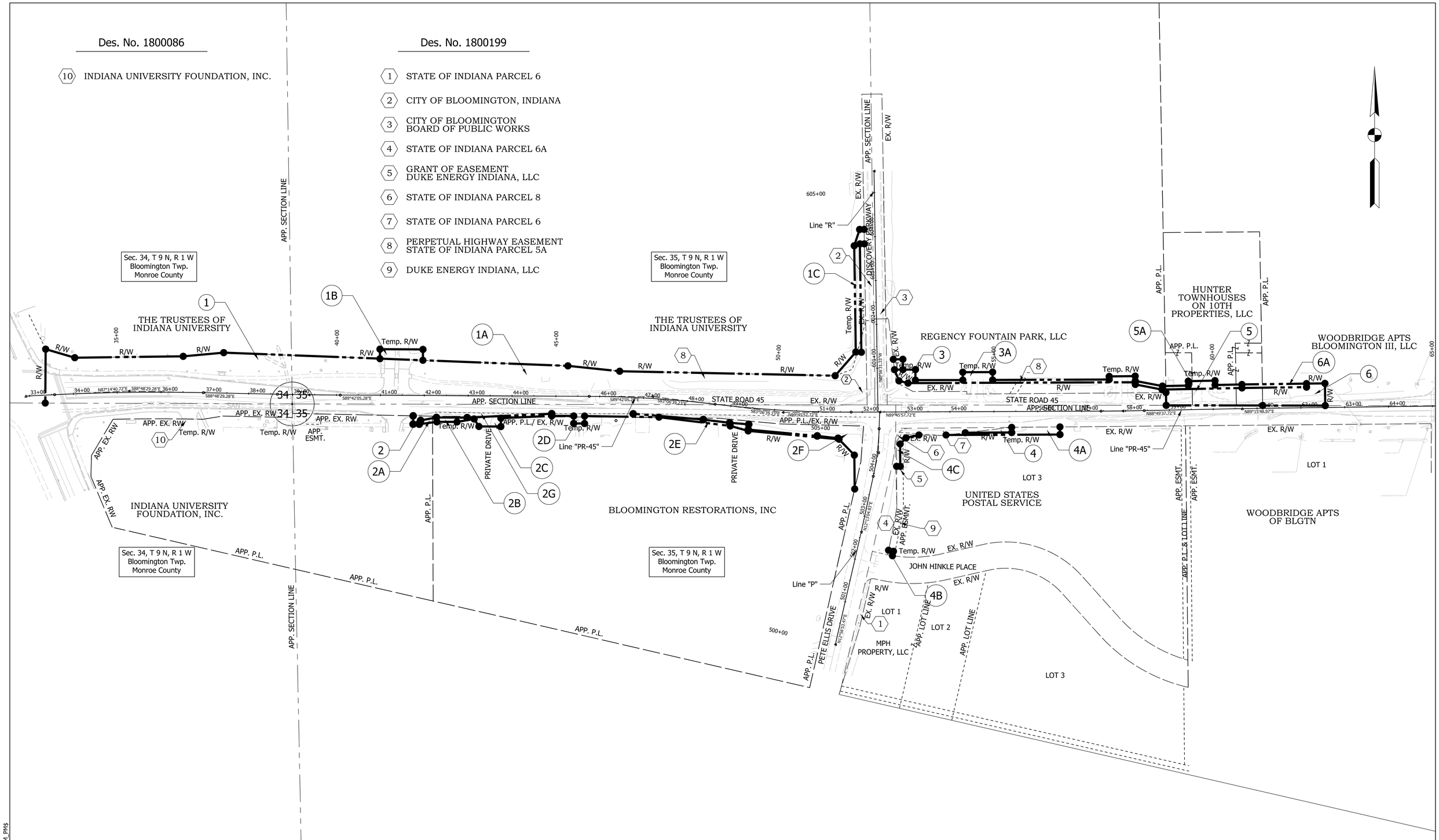

NOT FOR CONSTRUCTION

RECOMMENDED FOR APPROVAL 3/20/2023
DESIGN ENGINEER DATE

DESIGNED: MS 3/20/2023 DRAWN: MM 3/20/2023
CHECKED: KT 3/20/2023 CHECKED: KT 3/20/2023

INDIANA DEPARTMENT OF TRANSPORTATION

PLAT NO. 1

SCALE	BRIDGE FILE
1"=100'	N/A
	DESIGNATION
	1800199
SURVEY BOOK	SHEETS
Electronic	11 of 29
CONTRACT	PROJECT
R-41465	1800199

Plot$PLOT_DATE$ $PLOT_TIME$ AM_PM
File: L:\INDOT\18070904-10\Draw\Sheets\RW_Sht_Plat1.dgn
Model:$MODEL_NAME$

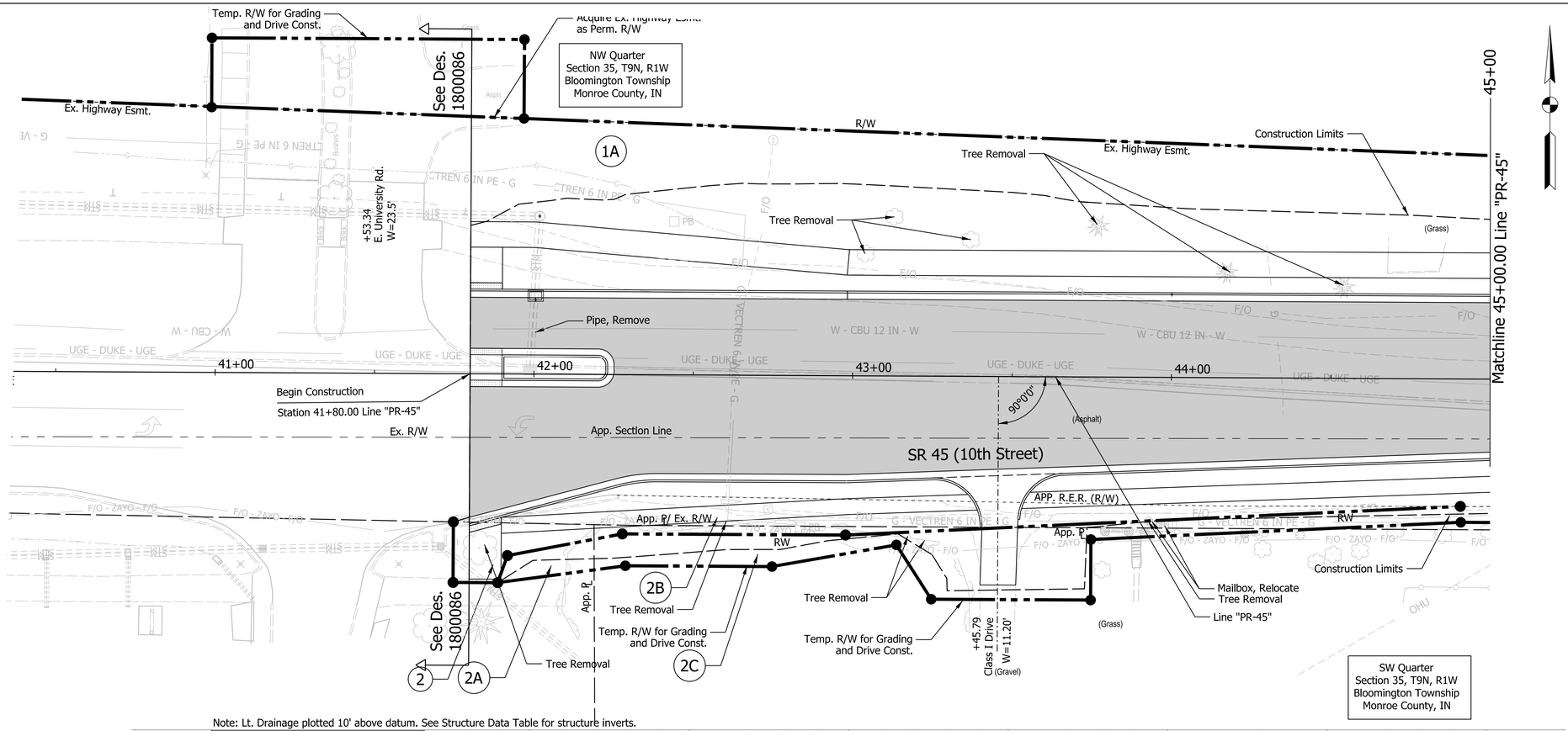

Note: Lt. Drainage plotted 10' above datum. See Structure Data Table for structure inverts.

EARTHWORK SUMMARY TABLE SR 45 (Line "PR-45")	
Common Excavation (CYS)	
Roadway & Grading	12558
Undercuts	348
Total Excavation	12906
Fill (CYS)	
Fill + 15 %	1023
Waste (CYS)	11883
Benching (CYS)	NA
Rock Excavation (CYS)	
Roadway & Grading	17

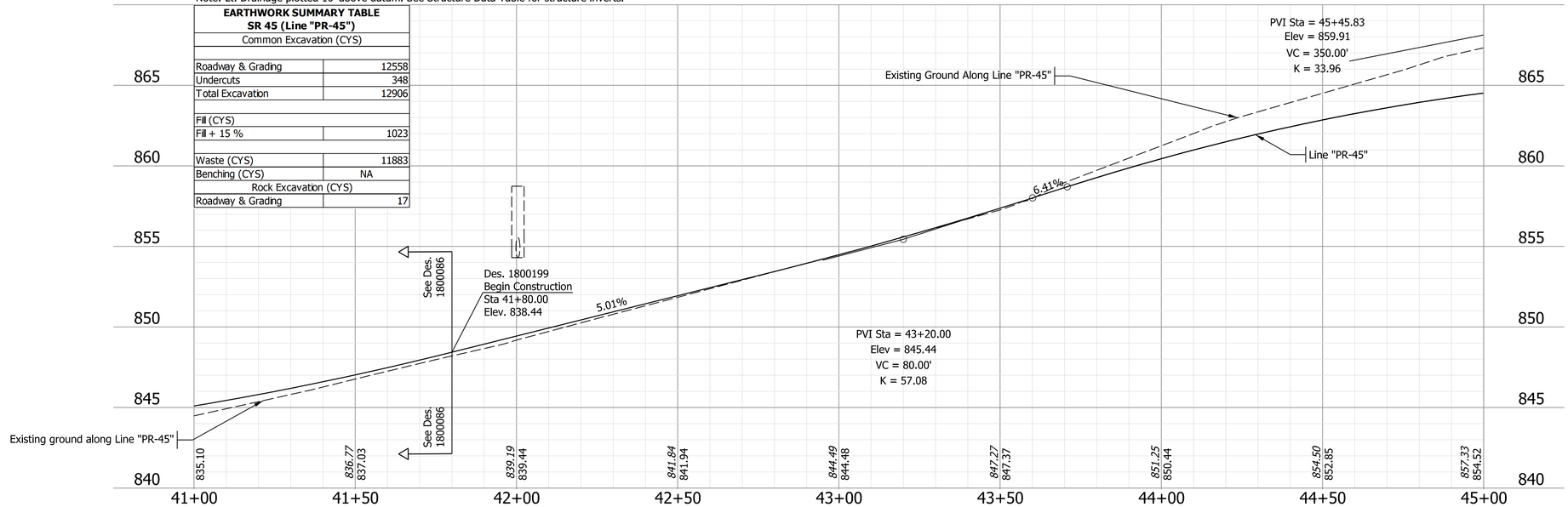

Denotes areas of Resurfacing

Denotes areas of Widening

Denotes areas of Full Depth Reconstruction

NOT FOR CONSTRUCTION

RECOMMENDED FOR APPROVAL — DESIGN ENGINEER — DATE 3/20/2023

DESIGNED: MS 3/20/2023 | DRAWN: MM 3/20/2023

CHECKED: KT 3/20/2023 | CHECKED: KT 3/20/2023

INDIANA DEPARTMENT OF TRANSPORTATION

PLAN AND PROFILE
Sta. 41+00 to 45+00 Line "PR-45"

SCALE	BRIDGE FILE
1"=20'	N/A
VERTICAL SCALE	DESIGNATION
1"=5'	1800199
SURVEY BOOK	SHEETS
Electronic	12 of 29
CONTRACT	PROJECT
R-41465	1800199

File: L:\INDOT\18070904-10\Draw\Sheets\RW_Sht_PP_20_01.dgn
Model:$MODEL_NAME$
Plot:PLOT_DATE$ $TIME$ AM_PM

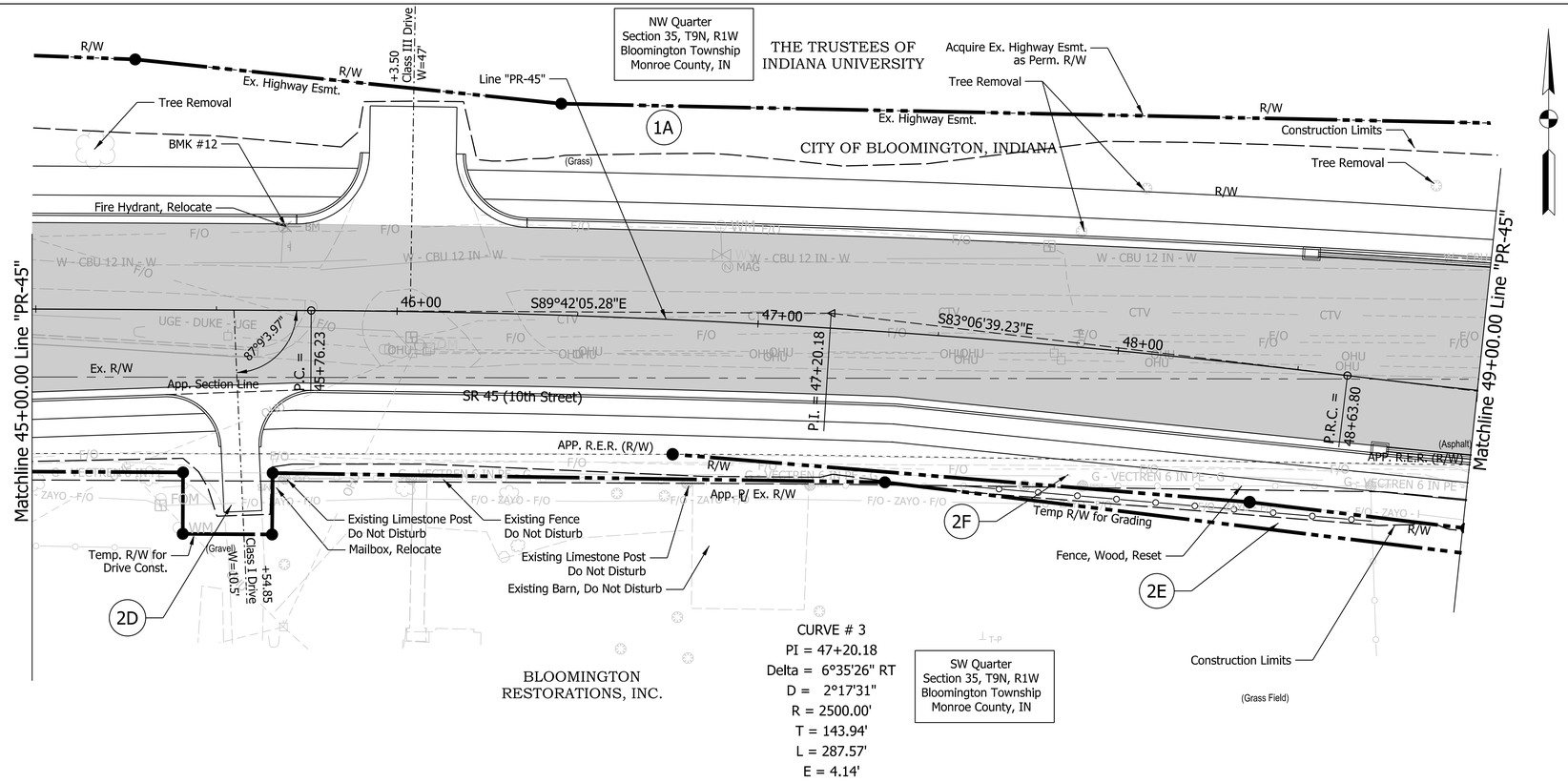

CURVE # 3
PI = 47+20.18
Delta = 6°35'26" RT
D = 2°17'31"
R = 2500.00'
T = 143.94'
L = 287.57'
E = 4.14'

Note: Lt. Drainage plotted 10' above datum. See Structure Data Table for structure inverts.

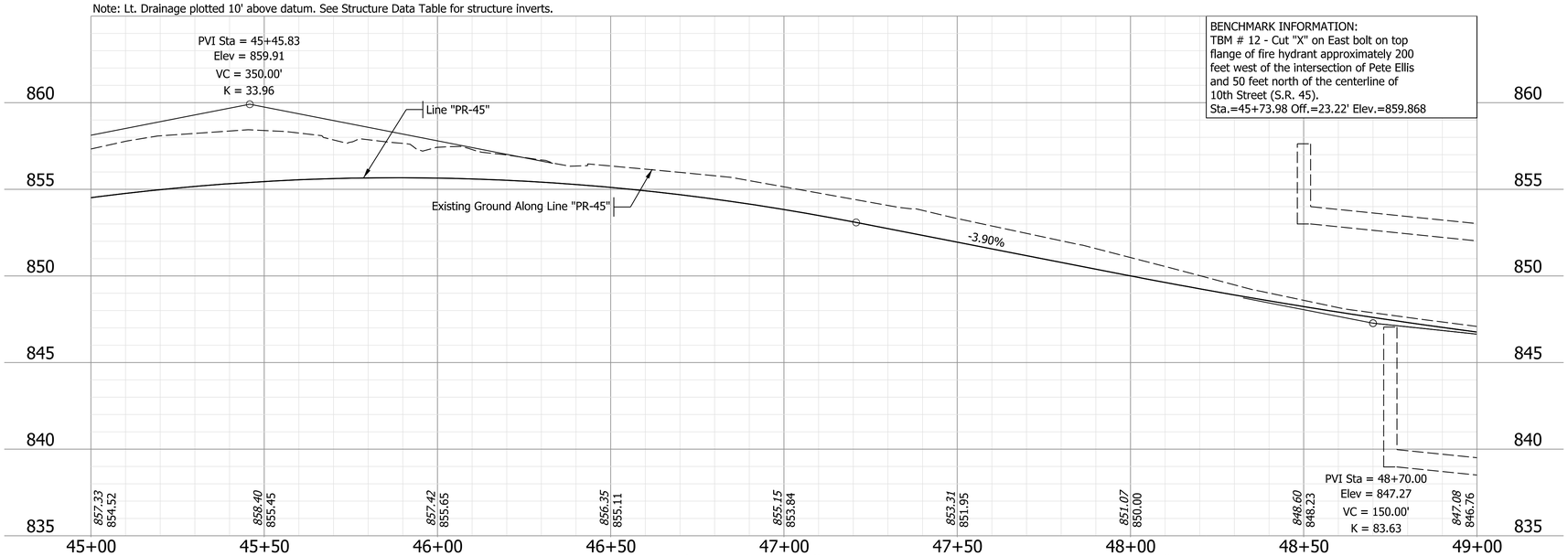

Denotes areas of Resurfacing
Denotes areas of Widening
Denotes areas of Full Depth Reconstruction

NOT FOR CONSTRUCTION

RECOMMENDED FOR APPROVAL — DESIGN ENGINEER — 3/20/2023 DATE

DESIGNED: MS 3/20/2023 | DRAWN: MM 3/20/2023
CHECKED: KT 3/20/2023 | CHECKED: KT 3/20/2023

INDIANA DEPARTMENT OF TRANSPORTATION

PLAN AND PROFILE
Sta. 45+00 to 49+00 Line "PR-45"

SCALE	BRIDGE FILE
1"=20'	N/A
VERTICAL SCALE	DESIGNATION
1"=5'	1800199
SURVEY BOOK	SHEETS
Electronic	13 of 29
CONTRACT	PROJECT
R-41465	1800199

Plot: PLOT_DATE$ PLOT_TIME$ AM_PM
File: L:\INDOT\18070904-10\Draw\Sheets\RW_Sht_PP_20_02.dgn
Model: $MODEL_NAME$

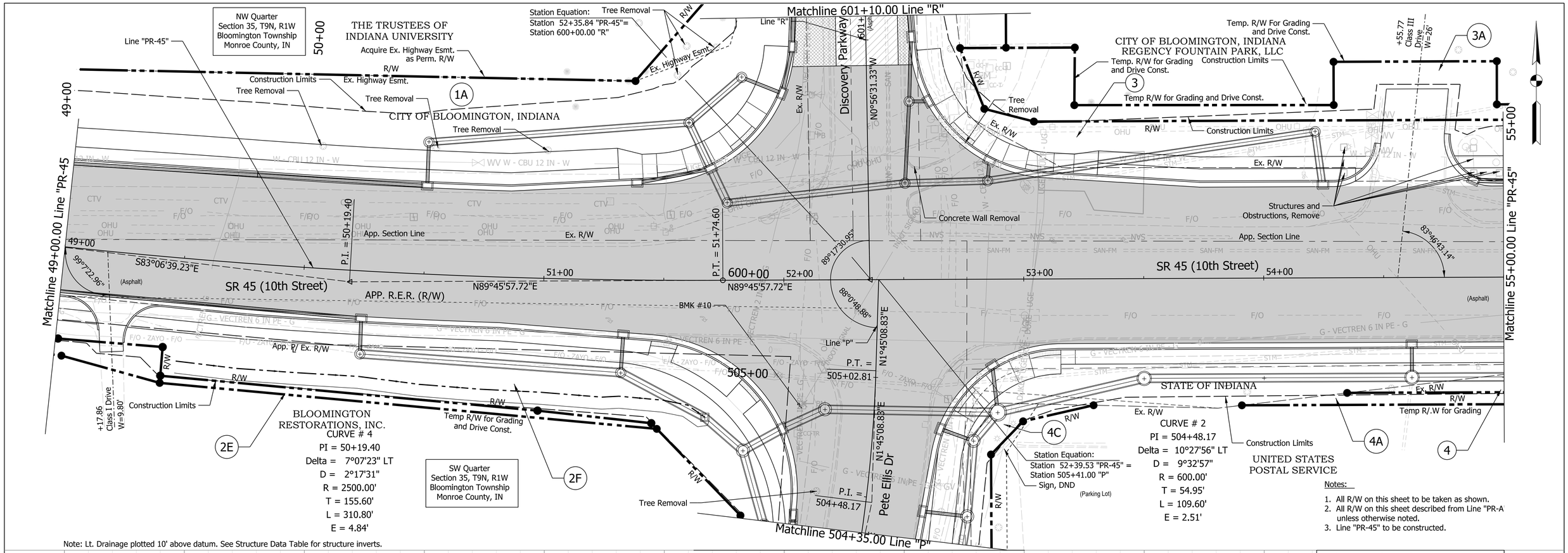

Note: Lt. Drainage plotted 10' above datum. See Structure Data Table for structure inverts.

Notes:

1. All R/W on this sheet to be taken as shown.
2. All R/W on this sheet described from Line "PR-A unless otherwise noted.
3. Line "PR-45" to be constructed.

BENCHMARK INFORMATION:
TBM # 10 - Cut "X" on northeast bolt of traffic signal pole at southwest corner of the intersection of Pete Ellis Drive and 10th Street (S.R. 45). Approximately 30 feet West of the centerline of Pete Ellis and 50 feet South of the cenerline of 10th Street.
Sta. 52+08.01 Off.=51.54' Elev.=839.345

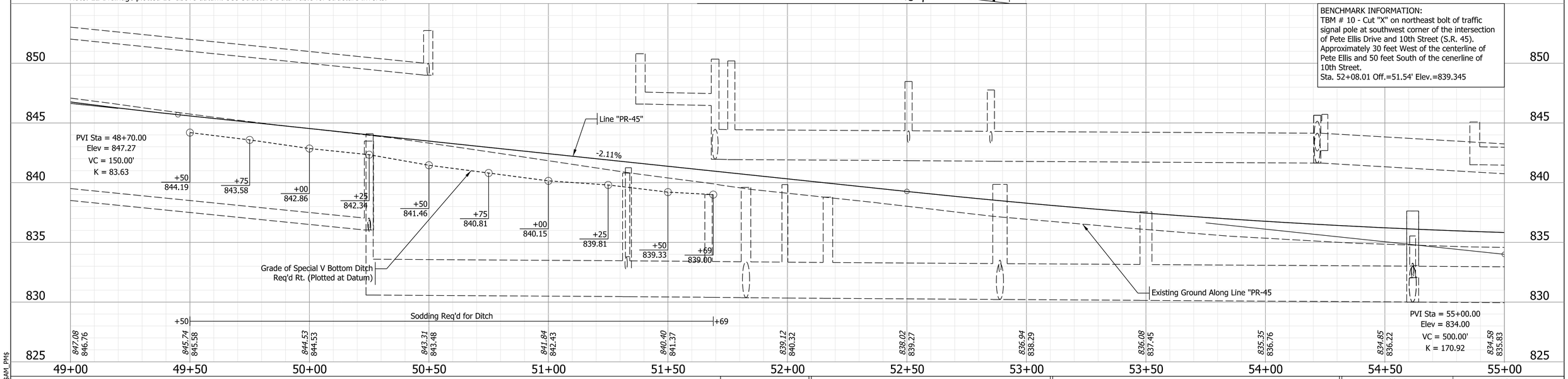

Denotes areas of Resurfacing

Denotes areas of Widening

Denotes areas of Full Depth Reconstruction

NOT FOR CONSTRUCTION

RECOMMENDED FOR APPROVAL — DESIGN ENGINEER — DATE 3/20/2023

DESIGNED: MS 3/20/2023 | DRAWN: MM 3/20/2023

CHECKED: KT 3/20/2023 | CHECKED: KT 3/20/2023

INDIANA DEPARTMENT OF TRANSPORTATION

PLAN AND PROFILE
Sta. 49+00 to 55+00 Line "PR-45

SCALE	BRIDGE FILE
1"=20'	N/A
VERTICAL SCALE	DESIGNATION
1"=5'	1800199
SURVEY BOOK	SHEETS
Electronic	14 of 29
CONTRACT	PROJECT
R-41465	1800199

File: L:\INDOT\18070904-10\Draw\Sheets\RW_Sht_PP_20_03.dgn
Model:$MODEL_NAME$
Plot:PLOT_DATE$ PLOT_TIME$ AM_PM

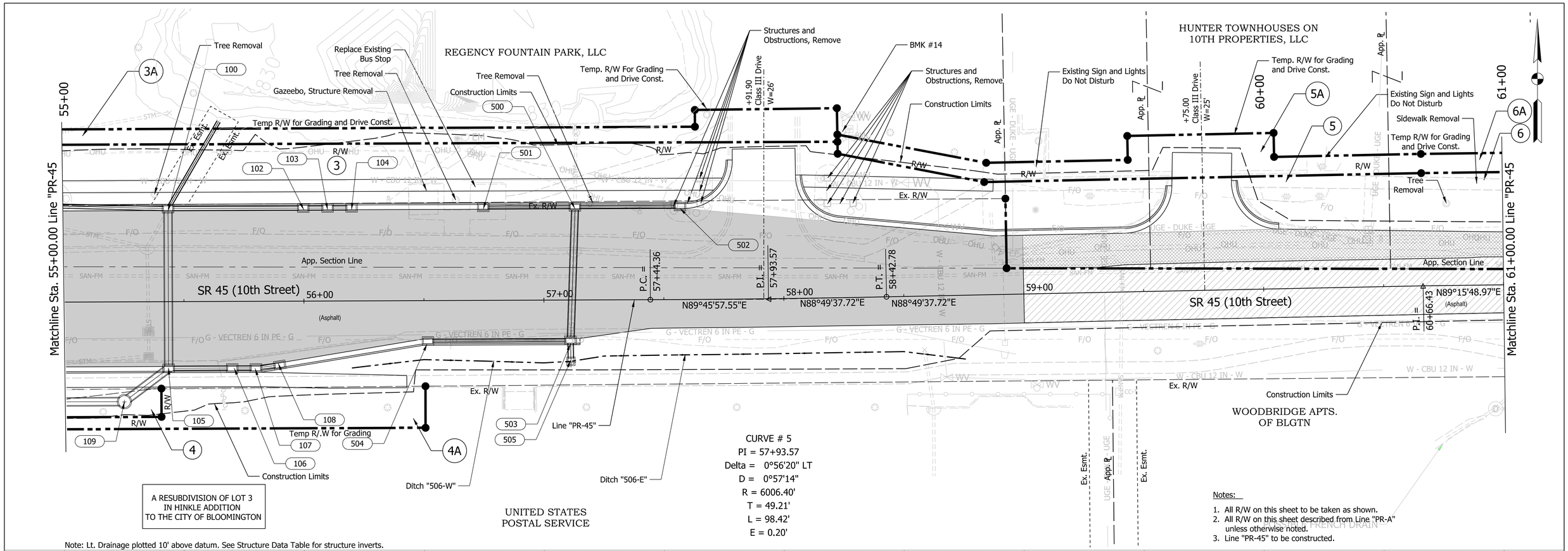

Note: Lt. Drainage plotted 10' above datum. See Structure Data Table for structure inverts.

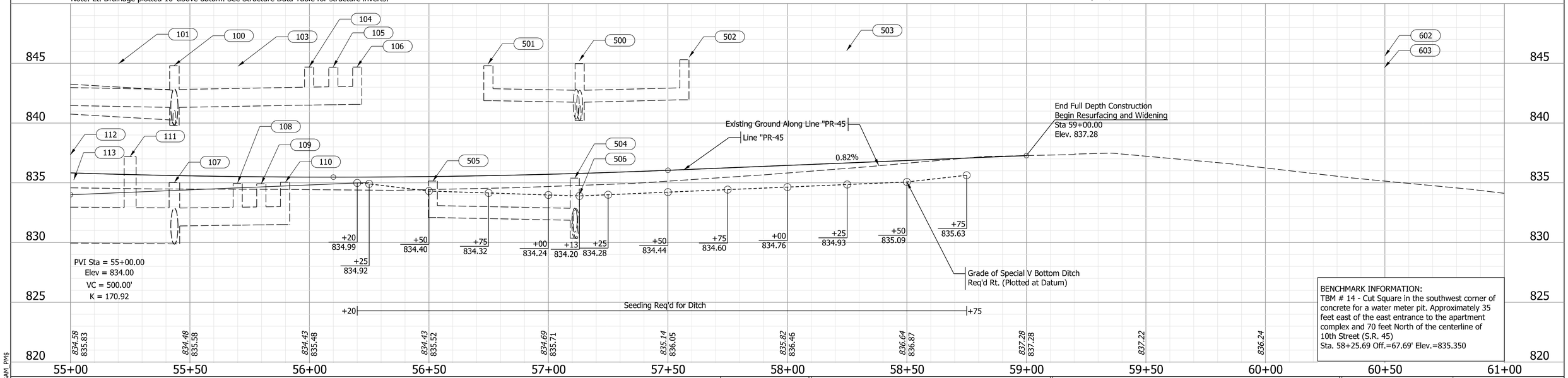

BENCHMARK INFORMATION:
TBM # 14 - Cut Square in the southwest corner of concrete for a water meter pit. Approximately 35 feet east of the east entrance to the apartment complex and 70 feet North of the centerline of 10th Street (S.R. 45)
Sta. 58+25.69 Off.=67.69' Elev.=835.350

Denotes areas of Resurfacing
Denotes areas of Widening
Denotes areas of Full Depth Reconstruction

NOT FOR CONSTRUCTION

RECOMMENDED FOR APPROVAL — DESIGN ENGINEER — DATE 3/20/2023

DESIGNED: MS 3/20/2023 | DRAWN: MM 3/20/2023
CHECKED: KT 3/20/2023 | CHECKED: KT 3/20/2023

INDIANA DEPARTMENT OF TRANSPORTATION

PLAN AND PROFILE
Sta. 55+00 to 61+00 Line "PR-45

SCALE	BRIDGE FILE
1"=20'	N/A
VERTICAL SCALE	DESIGNATION
1"=5'	1800199
SURVEY BOOK	SHEETS
Electronic	15 of 29
CONTRACT	PROJECT
R-41465	1800199

File: L:\INDOT\18070904-10\Draw\Sheets\RW_Sht_PP_20_04.dgn
Model:$MODEL_NAME$
Plot:PLOT_DATE$ PLOT_TIME$ AM_PM

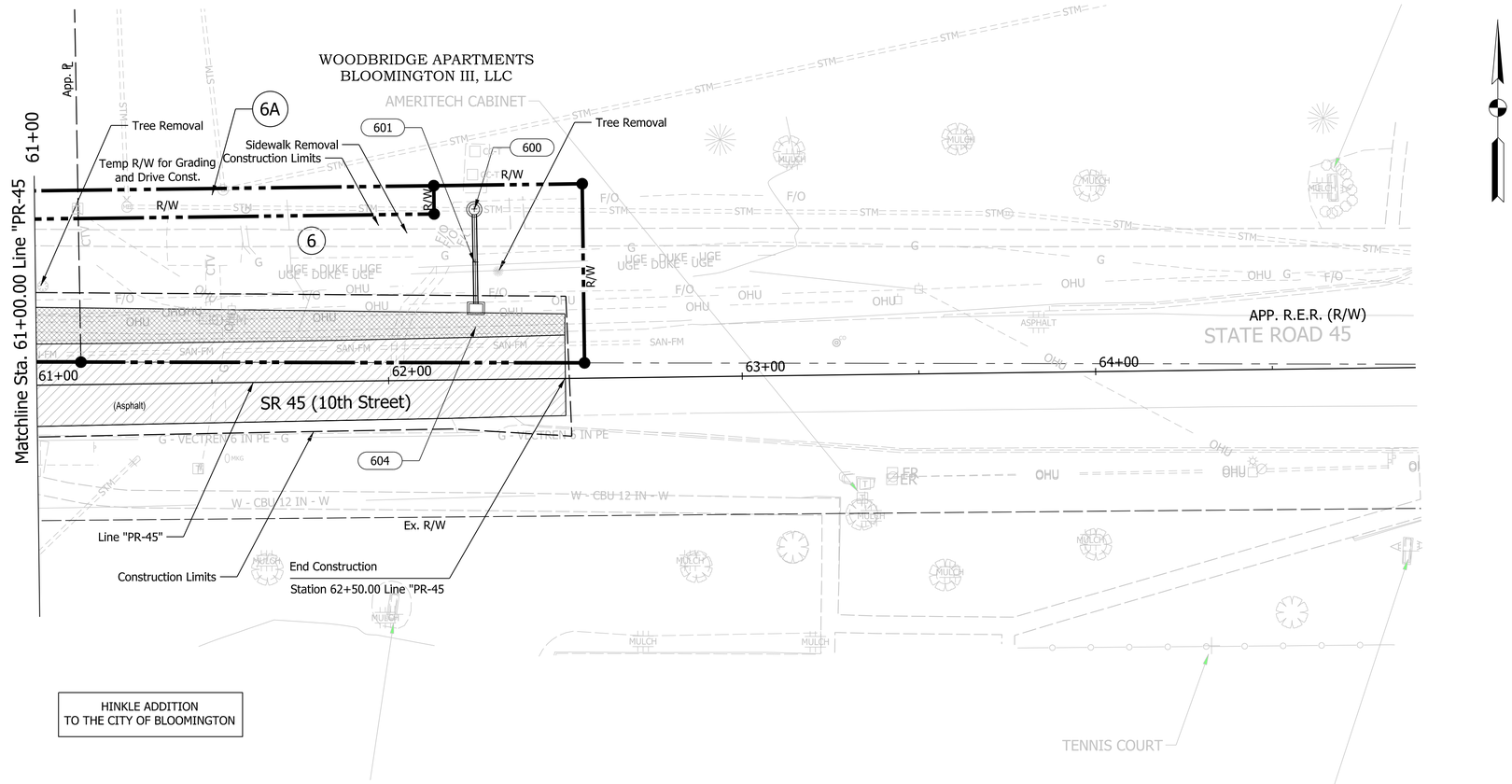

Note: Lt. Drainage plotted 10' above datum. See Structure Data Table for structure inverts.

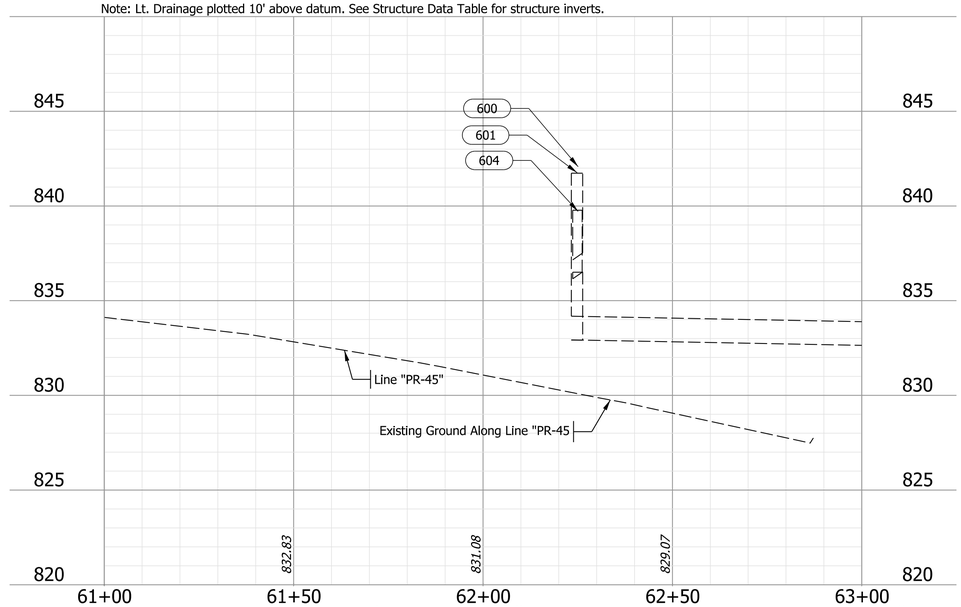

Denotes areas of Resurfacing

Denotes areas of Widening

Denotes areas of Full Depth Reconstruction

NOT FOR CONSTRUCTION

RECOMMENDED FOR APPROVAL — DESIGN ENGINEER — DATE 3/20/2023

DESIGNED: MS 3/20/2023 | DRAWN: MM 3/20/2023

CHECKED: KT 3/20/2023 | CHECKED: KT 3/20/2023

INDIANA DEPARTMENT OF TRANSPORTATION

PLAN AND PROFILE
Sta. 61+00 to 63+00 Line "PR-45

SCALE	BRIDGE FILE
1"=20'	N/A
VERTICAL SCALE	DESIGNATION
1"=5'	1800199
SURVEY BOOK	SHEETS
Electronic	16 of 29
CONTRACT	PROJECT
R-41465	1800199

Plot: PLOT_DATE$ PLOT_TIME$ AM_PM

File: L:\INDOT\18070904-10\Draw\Sheets\RW_Sht_PP_20_05.dgn
Model: $MODEL_NAME$

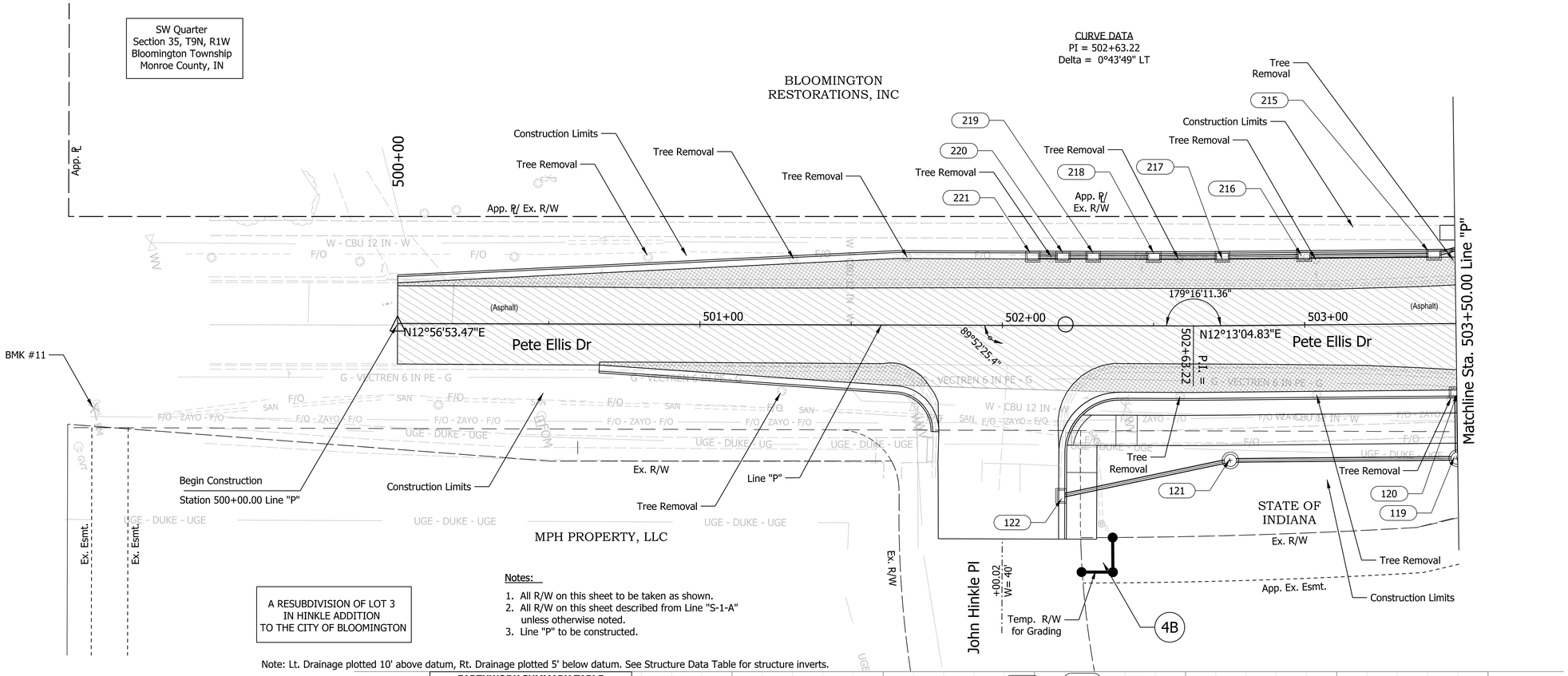

Notes:

1. All R/W on this sheet to be taken as shown.
2. All R/W on this sheet described from Line "S-1-A" unless otherwise noted.
3. Line "P" to be constructed.

Note: Lt. Drainage plotted 10' above datum, Rt. Drainage plotted 5' below datum. See Structure Data Table for structure inverts.

BENCHMARK INFORMATION:

TBM # 11 - Square cut where concrete meets asphalt approximately 30 feet East of Pete Ellis and 60 feet North of the centerline of the railroad tracks.
Elev.=839.775

EARTHWORK SUMMARY TABLE
Pete Ellis Drive (Line "P")

Common Excavation (CYS)	
Roadway & Grading	1321
Undercuts	61
Total Excavation	1382
Fill (CYS)	
Fill + 15 %	108
Waste (CYS)	1273
Benching (CYS)	NA
Rock Excavation (CYS)	
Roadway & Grading	0

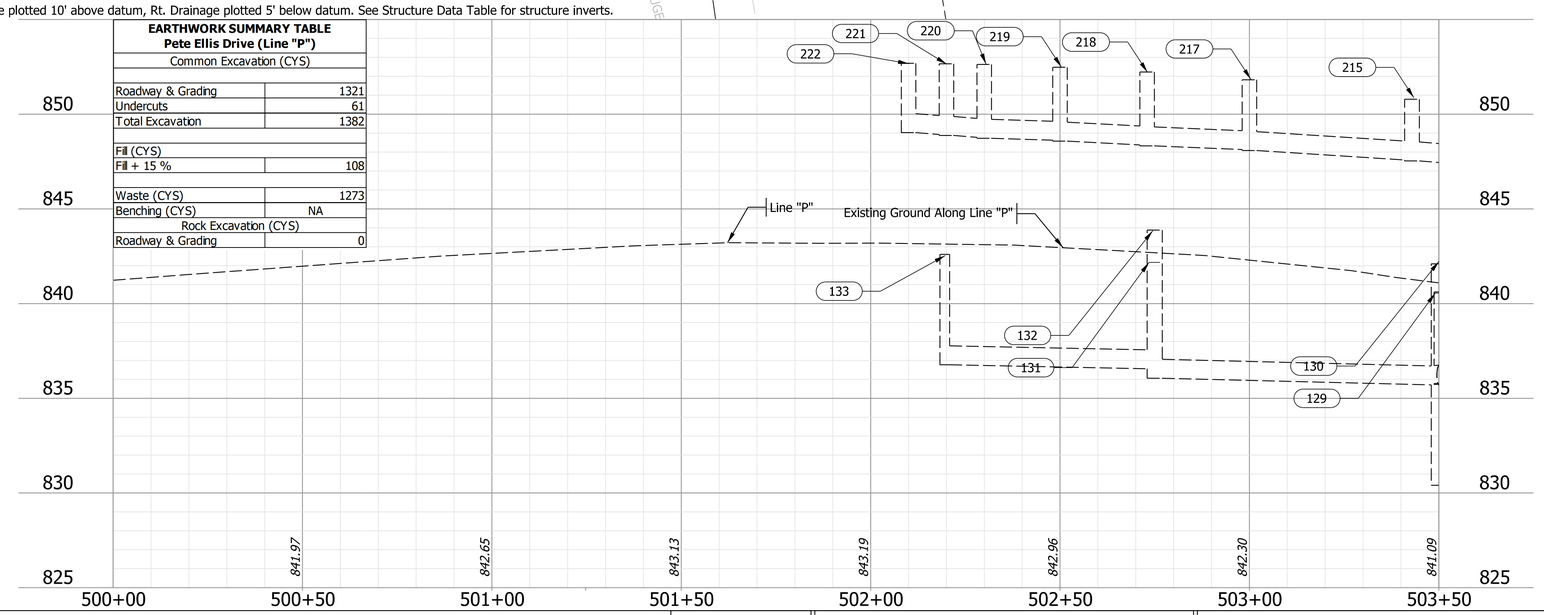

Denotes areas of Resurfacing
Denotes areas of Widening
Denotes areas of Full Depth Reconstruction

NOT FOR CONSTRUCTION

RECOMMENDED FOR APPROVAL — DESIGN ENGINEER — 3/20/2023 DATE

DESIGNED: MS 3/20/2023 | DRAWN: MM 3/20/2023
CHECKED: KT 3/20/2023 | CHECKED: KT 3/20/2023

INDIANA DEPARTMENT OF TRANSPORTATION

PLAN AND PROFILE
Sta. 500+00 to 503+50 Line "P"

SCALE	BRIDGE FILE
1"=20'	N/A
VERTICAL SCALE	DESIGNATION
1"=5'	1800199
SURVEY BOOK	SHEETS
Electronic	17 of 29
CONTRACT	PROJECT
R-41465	1800199

Plot Date: $PLOT_DATE$ Plot Time: $PLOT_TIME$ AM_PM
File: L:\INDOT\18070904-10\Draw\Sheets\RW_Sht_PP_20_06.dgn
Model: $MODEL_NAME$

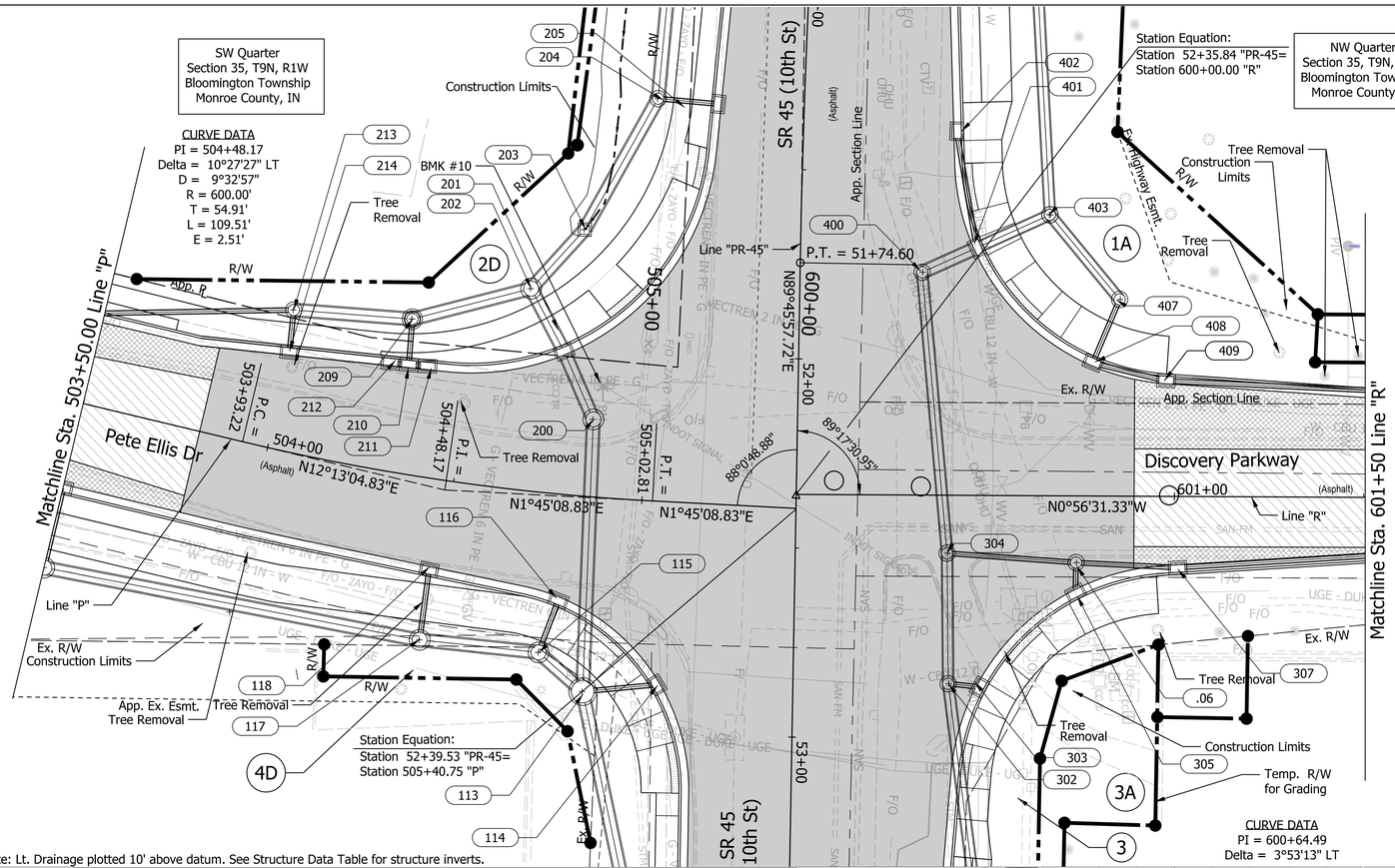

Notes:

1. All R/W on this sheet to be taken as shown.
2. All R/W on this sheet described from Line "R" unless otherwise noted.
3. Line "R" to be constructed.

Note: Lt. Drainage plotted 10' above datum. See Structure Data Table for structure inverts.

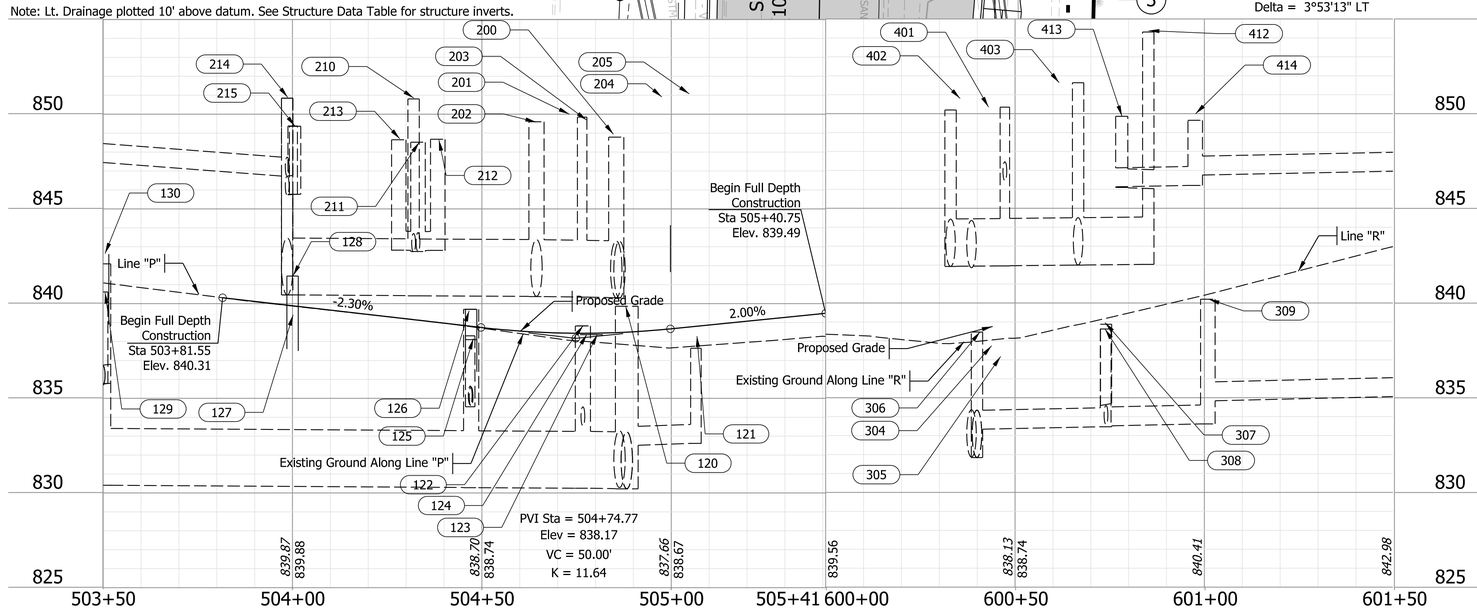

BENCHMARK INFORMATION:
TBM # 10 - Cut "X" on northeast bolt of traffic signal pole at southwest corner of the intersection of Pete Ellis Drive and 10th Street (S.R. 45). Approximately 30 feet West of the centerline of Pete Ellis and 50 feet South of the cenerline of 10th Street.
Sta. 52+-8.01 Off.=51.54' Elev.=839.345

Denotes areas of Resurfacing
Denotes areas of Widening
Denotes areas of Full Depth Reconstruction

NOT FOR CONSTRUCTION

RECOMMENDED FOR APPROVAL — DESIGN ENGINEER — DATE 3/20/2023

DESIGNED: MS 3/20/2023 | DRAWN: MM 3/20/2023
CHECKED: KT 3/20/2023 | CHECKED: KT 3/20/2023

INDIANA DEPARTMENT OF TRANSPORTATION

PLAN AND PROFILE
Sta. 503+50 "P" to 601+50 Line "R"

SCALE	BRIDGE FILE
1"=20'	N/A
VERTICAL SCALE	DESIGNATION
1"=5'	1800199
SURVEY BOOK	SHEETS
Electronic	18 of 29
CONTRACT	PROJECT
R-41465	1800199

File: L:\INDOT\18070904-10\Draw\Sheets\RW_Sht_PP_20_07.dgn
Model:$MODEL_NAME$
Plot:PLOT_DATE$ $PLOT_TIME$ AM_PM

NW Quarter
Section 35, T9N, R1W
Bloomington Township
Monroe County, IN

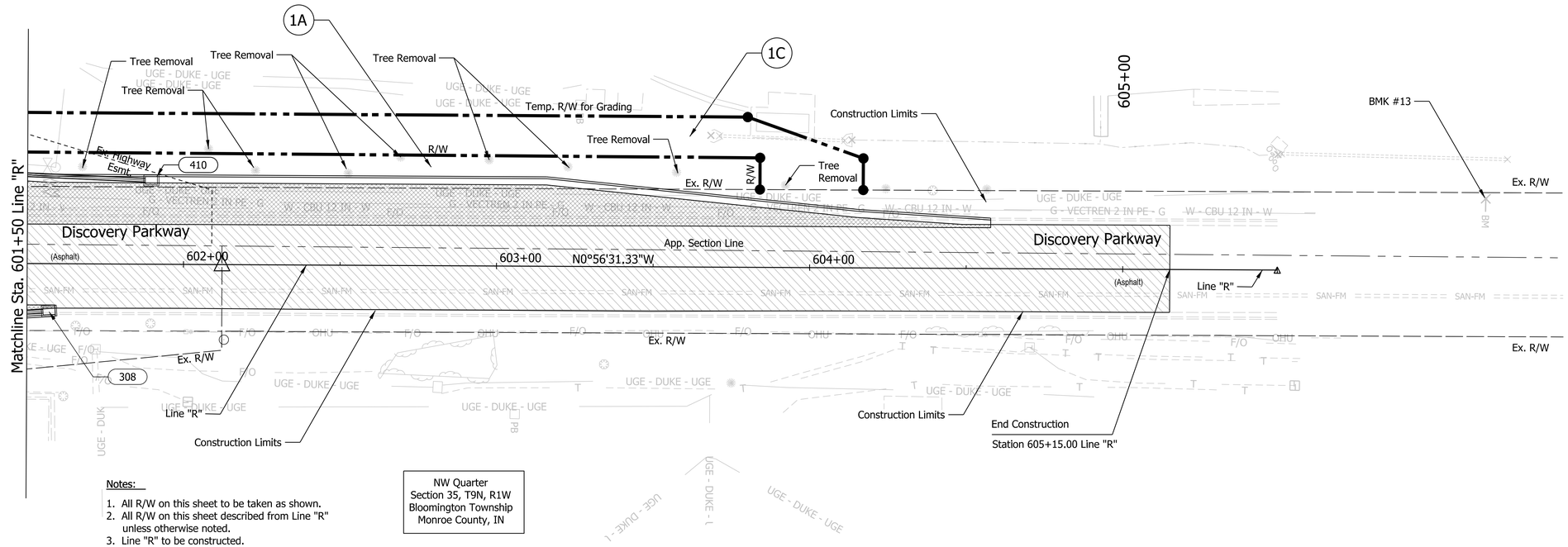

Notes:

1. All R/W on this sheet to be taken as shown.
2. All R/W on this sheet described from Line "R" unless otherwise noted.
3. Line "R" to be constructed.

NW Quarter
Section 35, T9N, R1W
Bloomington Township
Monroe County, IN

Note: Lt. Drainage plotted 10' above datum. See Structure Data Table for structure inverts.

EARTHWORK SUMMARY TABLE
Discovery Parkway (Line "R")

Common Excavation (CYS)	
Roadway & Grading	778
Undercuts	9
Total Excavation	787
Fill (CYS)	
Fill + 15 %	85
Waste (CYS)	702
Benching (CYS)	NA
Rock Excavation (CYS)	
Roadway & Grading	17

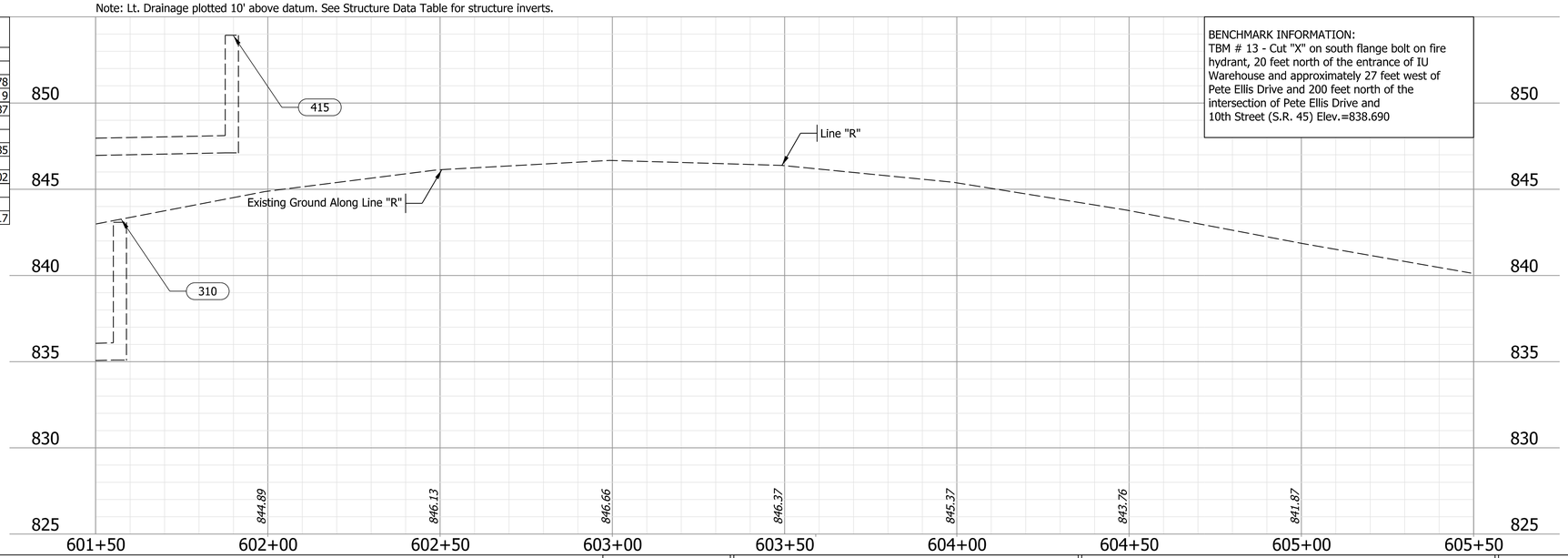

BENCHMARK INFORMATION:
TBM # 13 - Cut "X" on south flange bolt on fire hydrant, 20 feet north of the entrance of IU Warehouse and approximately 27 feet west of Pete Ellis Drive and 200 feet north of the intersection of Pete Ellis Drive and 10th Street (S.R. 45) Elev.=838.690

Denotes areas of Resurfacing
Denotes areas of Widening
Denotes areas of Full Depth Reconstruction

NOT FOR CONSTRUCTION

RECOMMENDED FOR APPROVAL — DESIGN ENGINEER — 3/20/2023 DATE

DESIGNED: MS 3/20/2023 DRAWN: MM 3/20/2023
CHECKED: KT 3/20/2023 CHECKED: KT 3/20/2023

INDIANA DEPARTMENT OF TRANSPORTATION

PLAN AND PROFILE
Sta. 601+50 to 605+50 Line "R"

SCALE	BRIDGE FILE
1"=20'	N/A
VERTICAL SCALE	DESIGNATION
1"=5'	1800199
SURVEY BOOK	SHEETS
Electronic	19 of 29
CONTRACT	PROJECT
R-41465	1800199

Plot: $PLOT_DATE$ $PLOT_TIME$ AM_PM
File: L:\INDOT\18070904-10\Draw\Sheets\RW_Sht_PP_20_08.dgn
Model: $MODEL_NAME$

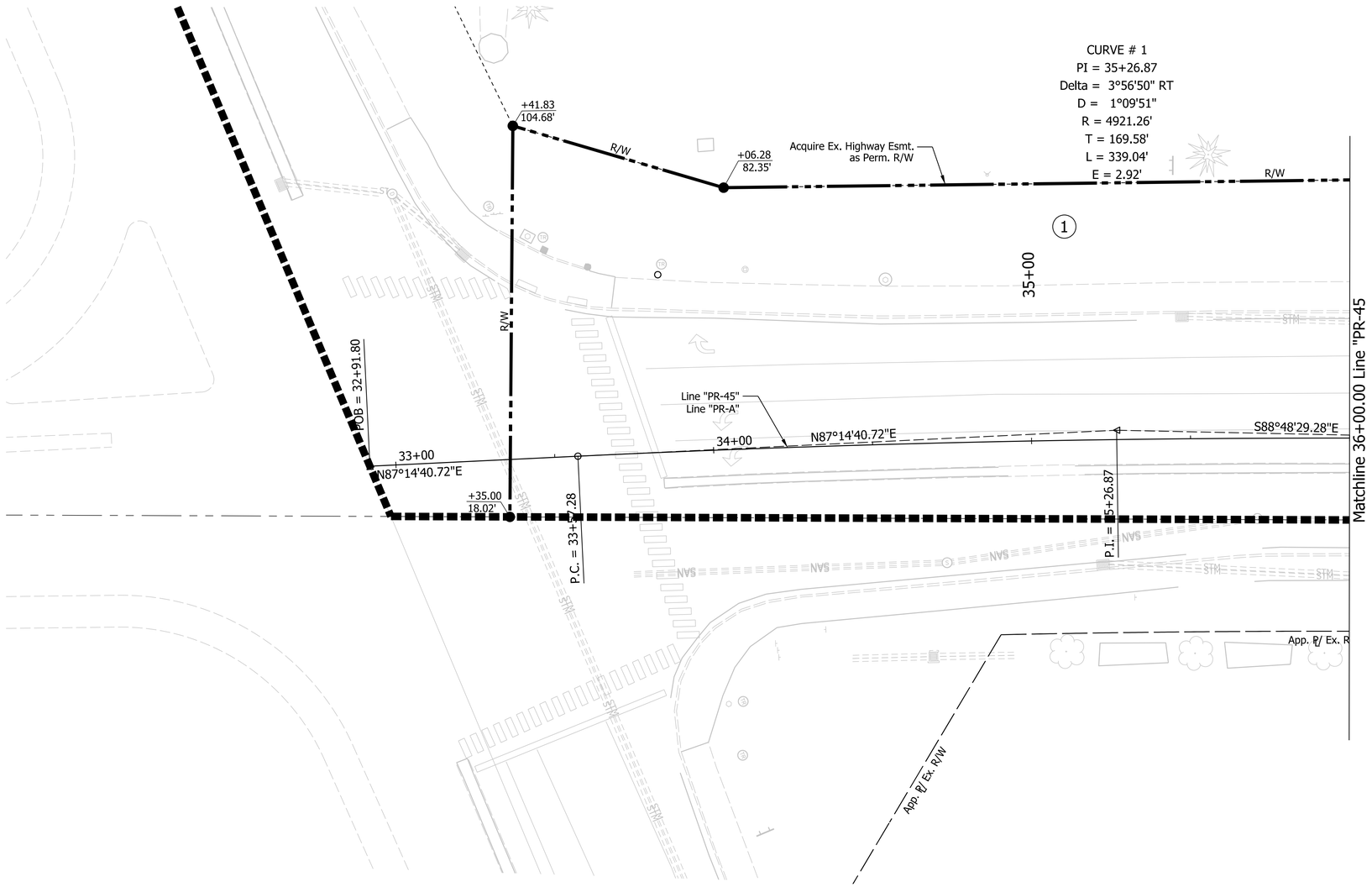

Denotes areas of Resurfacing

Denotes areas of Full Depth Reconstruction

Denotes areas of Widening

Notes:

1. All R/W on this sheet to be taken as shown.
2. All R/W on this sheet described from Line "PR-A" unless otherwise noted.
3. Line "PR-45 to be constructed.

NOT FOR CONSTRUCTION

RECOMMENDED FOR APPROVAL 3/20/2023
DESIGN ENGINEER DATE

DESIGNED: MS 3/20/2023 DRAWN: MM 3/20/2023
CHECKED: KT 3/20/2023 CHECKED: KT 3/20/2023

INDIANA DEPARTMENT OF TRANSPORTATION

RIGHT OF WAY DETAILS

SCALE	BRIDGE FILE
1"=20'	N/A
	DESIGNATION
	1800199
SURVEY BOOK	SHEETS
Electronic	20 of 29
CONTRACT	PROJECT
R-41465	1800199

PLOT_DATE$ PLOT_TIME$ AM_PM

File: L:\INDOT\18070904-10\Draw\Sheets\RW_Sht_RW Details_20_01.dgn
Model:$MODEL_NAME$

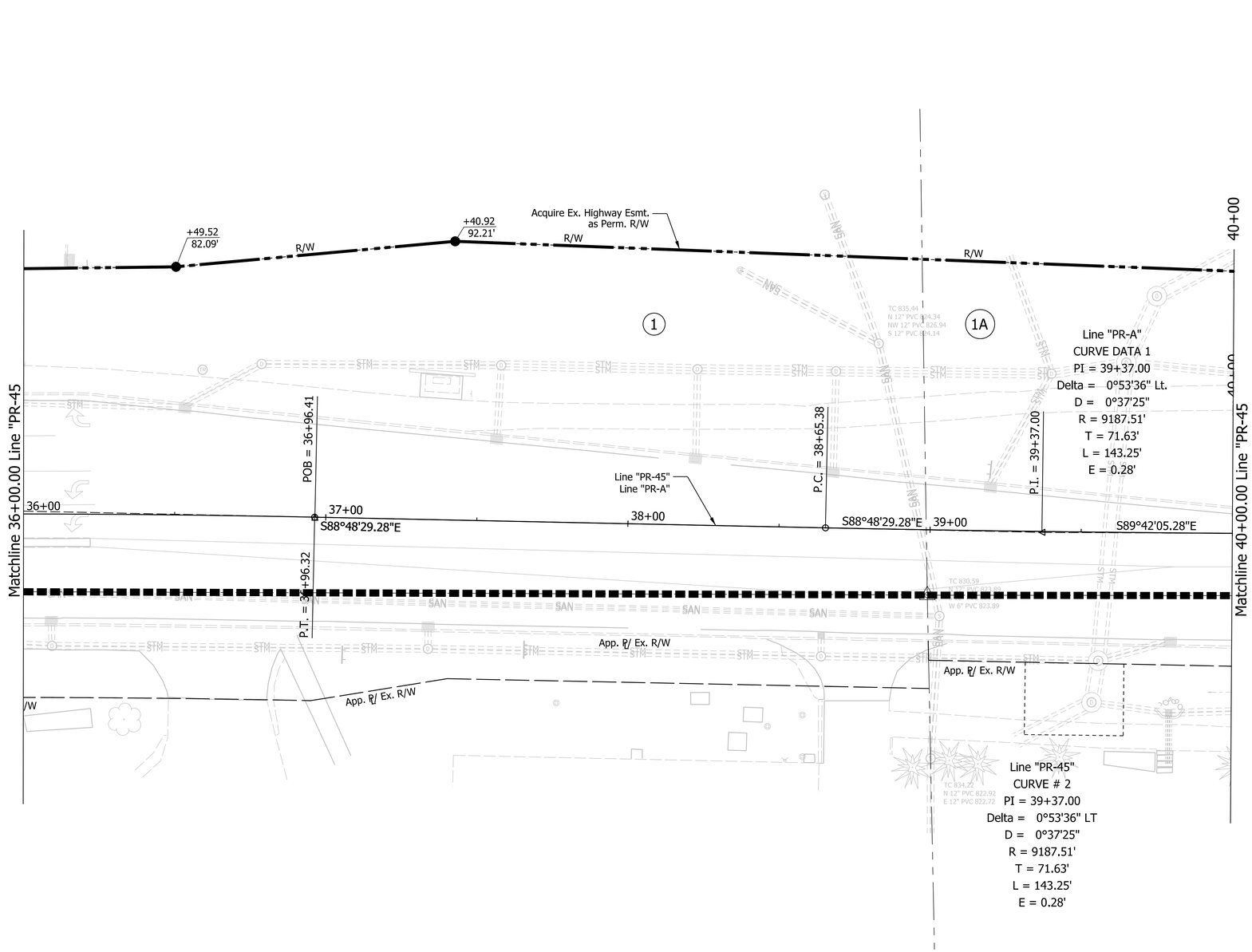

Denotes areas of Resurfacing

Denotes areas of Full Depth Reconstruction

Denotes areas of Widening

Notes:

1. All R/W on this sheet to be taken as shown.
2. All R/W on this sheet described from Line "PR-A" unless otherwise noted.
3. Line "PR-45 to be constructed.

NOT FOR CONSTRUCTION

RECOMMENDED FOR APPROVAL — DESIGN ENGINEER — DATE 3/20/2023

DESIGNED: MS 3/20/2023 | DRAWN: MM 3/20/2023

CHECKED: KT 3/20/2023 | CHECKED: KT 3/20/2023

INDIANA DEPARTMENT OF TRANSPORTATION

RIGHT OF WAY DETAILS

SCALE	BRIDGE FILE
1"=20'	N/A
	DESIGNATION
	1800199

SURVEY BOOK	SHEETS		
Electronic	21	of	29
CONTRACT	PROJECT		
R-41465	1800199		

PlotDate$PLOT_DATE$ PlotTime$PLOT_TIME$ AM_PM

File: L:\INDOT\18070904-10\Draw\Sheets\RW_Sht_RW Details_20_02.dgn
Model:$MODEL_NAME$

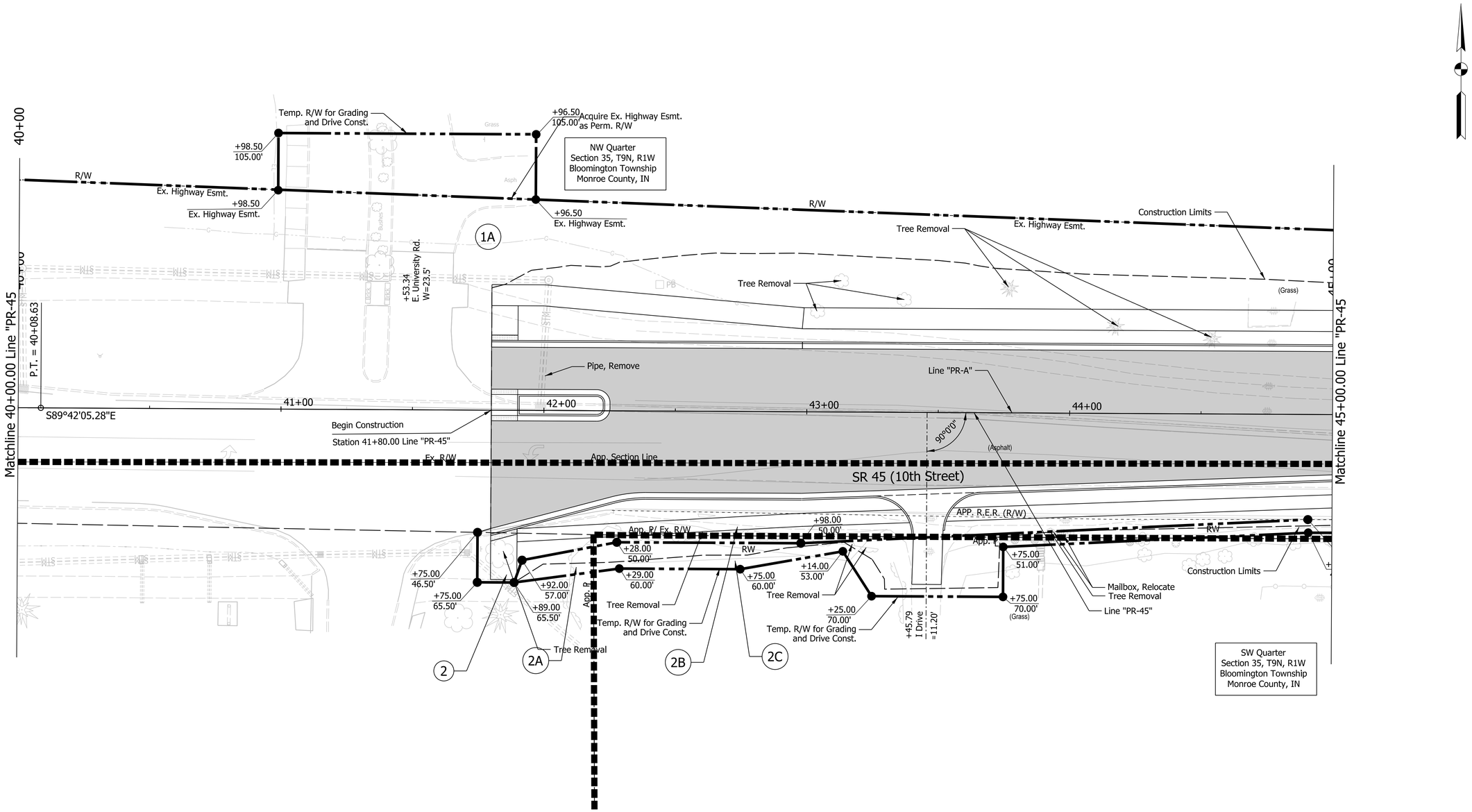

Denotes areas of Resurfacing

Denotes areas of Full Depth Reconstruction

Denotes areas of Widening

Notes:

1. All R/W on this sheet to be taken as shown.
2. All R/W on this sheet described from Line "PR-A" unless otherwise noted.
3. Line "PR-45 to be constructed.

NOT FOR CONSTRUCTION

RECOMMENDED FOR APPROVAL — DESIGN ENGINEER — DATE 3/20/2023

DESIGNED: MS 3/20/2023 | DRAWN: MM 3/20/2023

CHECKED: KT 3/20/2023 | CHECKED: KT 3/20/2023

INDIANA DEPARTMENT OF TRANSPORTATION

RIGHT OF WAY DETAILS

SCALE	BRIDGE FILE
1"=20'	N/A
	DESIGNATION
	1800199
SURVEY BOOK	SHEETS
Electronic	22 of 29
CONTRACT	PROJECT
R-41465	1800199

Plot$PLOT_DATE$ $PLOT_TIME$ AM_PM

File: L:\INDOT\18070904-10\Draw\Sheets\RW_Sht_RW Details_20_03.dgn
Model:$MODEL_NAME$

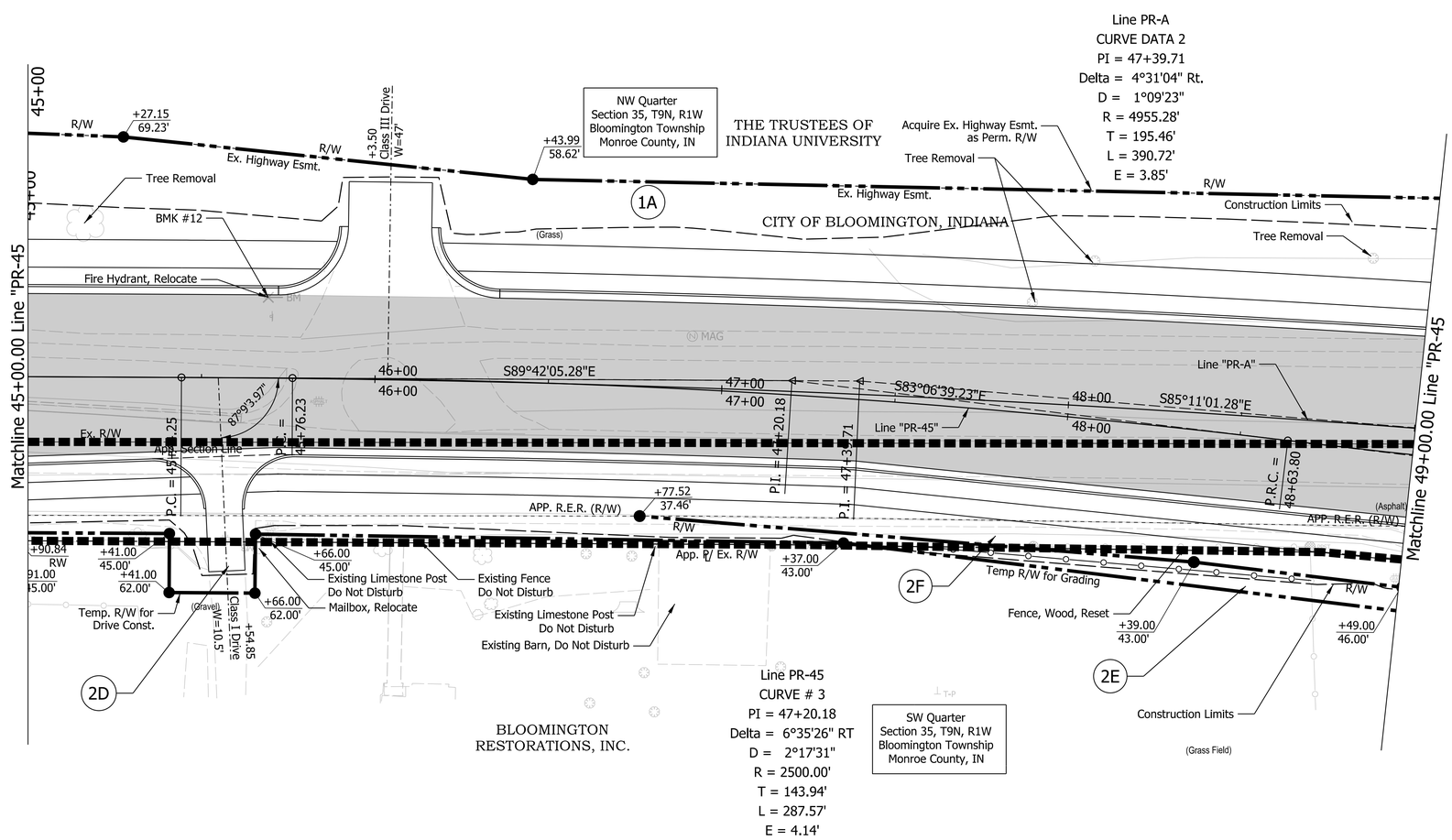

Denotes areas of Resurfacing

Denotes areas of Full Depth Reconstruction

Denotes areas of Widening

Notes:

1. All R/W on this sheet to be taken as shown.
2. All R/W on this sheet described from Line "PR-A" unless otherwise noted.
3. Line "PR-45 to be constructed.

NOT FOR CONSTRUCTION

RECOMMENDED FOR APPROVAL — DESIGN ENGINEER — DATE 3/20/2023

DESIGNED: MS 3/20/2023 DRAWN: MM 3/20/2023

CHECKED: KT 3/20/2023 CHECKED: KT 3/20/2023

INDIANA DEPARTMENT OF TRANSPORTATION

RIGHT OF WAY DETAILS

SCALE	BRIDGE FILE
1"=20'	N/A
	DESIGNATION
	1800199
SURVEY BOOK	SHEETS
Electronic	23 of 29
CONTRACT	PROJECT
R-41465	1800199

PlotBy:PLOT_DATE$ $TIME$ AM_PM

File: L:\INDOT\18070904-10\Draw\Sheets\RW_Sht_RW Details_20_04.dgn
Model:$MODEL_NAME$

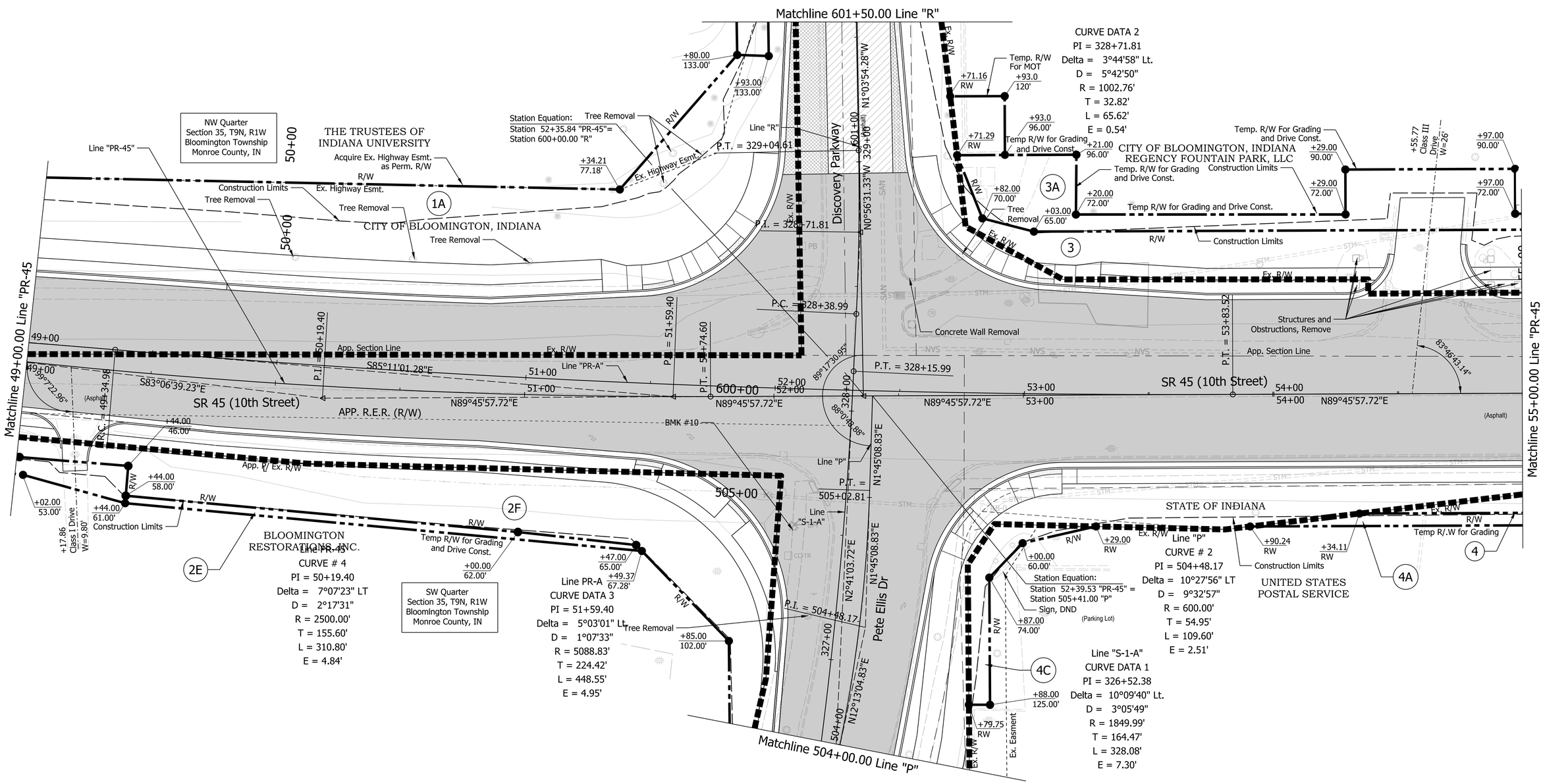

Denotes areas of Resurfacing

Denotes areas of Full Depth Reconstruction

Denotes areas of Widening

Notes:

1. All R/W on this sheet to be taken as shown.
2. All R/W on this sheet described from Line "PR-A" unless otherwise noted.
3. Line "PR-45" to be constructed.

NOT FOR CONSTRUCTION

RECOMMENDED FOR APPROVAL — DESIGN ENGINEER — DATE 3/20/2023

DESIGNED: MS 3/20/2023 | DRAWN: MM 3/20/2023

CHECKED: KT 3/20/2023 | CHECKED: KT 3/20/2023

INDIANA DEPARTMENT OF TRANSPORTATION

RIGHT OF WAY DETAILS

SCALE	BRIDGE FILE
1"=20'	N/A
	DESIGNATION
	1800199
SURVEY BOOK	SHEETS
Electronic	24 of 29
CONTRACT	PROJECT
R-41465	1800199

Plot$PLOT_DATE$ $PLOT_TIME$ AM_PM

File: L:\INDOT\18070904-10\Draw\Sheets\RW_Sht_RW Details_20_05.dgn
Model:$MODEL_NAME$

L/A CODE: 7291

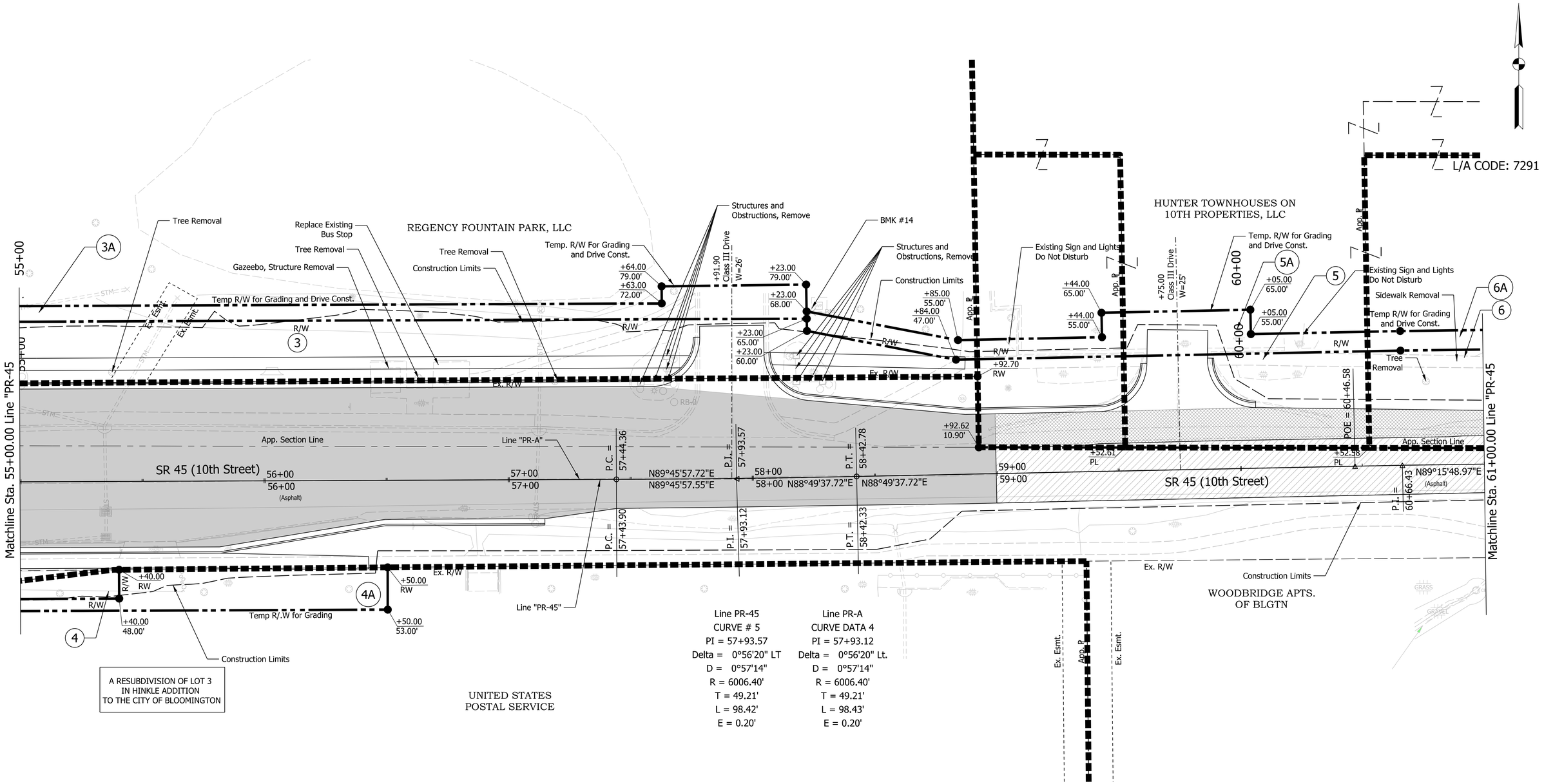

Denotes areas of Resurfacing

Denotes areas of Widening

Denotes areas of Full Depth Reconstruction

Notes:

1. All R/W on this sheet to be taken as shown.
2. All R/W on this sheet described from Line "PR-A" unless otherwise noted.
3. Line "PR-45 to be constructed.

NOT FOR CONSTRUCTION

RECOMMENDED FOR APPROVAL — DESIGN ENGINEER — DATE 3/20/2023

DESIGNED: MS 3/20/2023 | DRAWN: MM 3/20/2023

CHECKED: KT 3/20/2023 | CHECKED: KT 3/20/2023

INDIANA DEPARTMENT OF TRANSPORTATION

RIGHT OF WAY DETAILS

SCALE	BRIDGE FILE
1"=20'	N/A
	DESIGNATION
	1800199

SURVEY BOOK	SHEETS		
Electronic	25	of	29
CONTRACT	PROJECT		
R-41465	1800199		

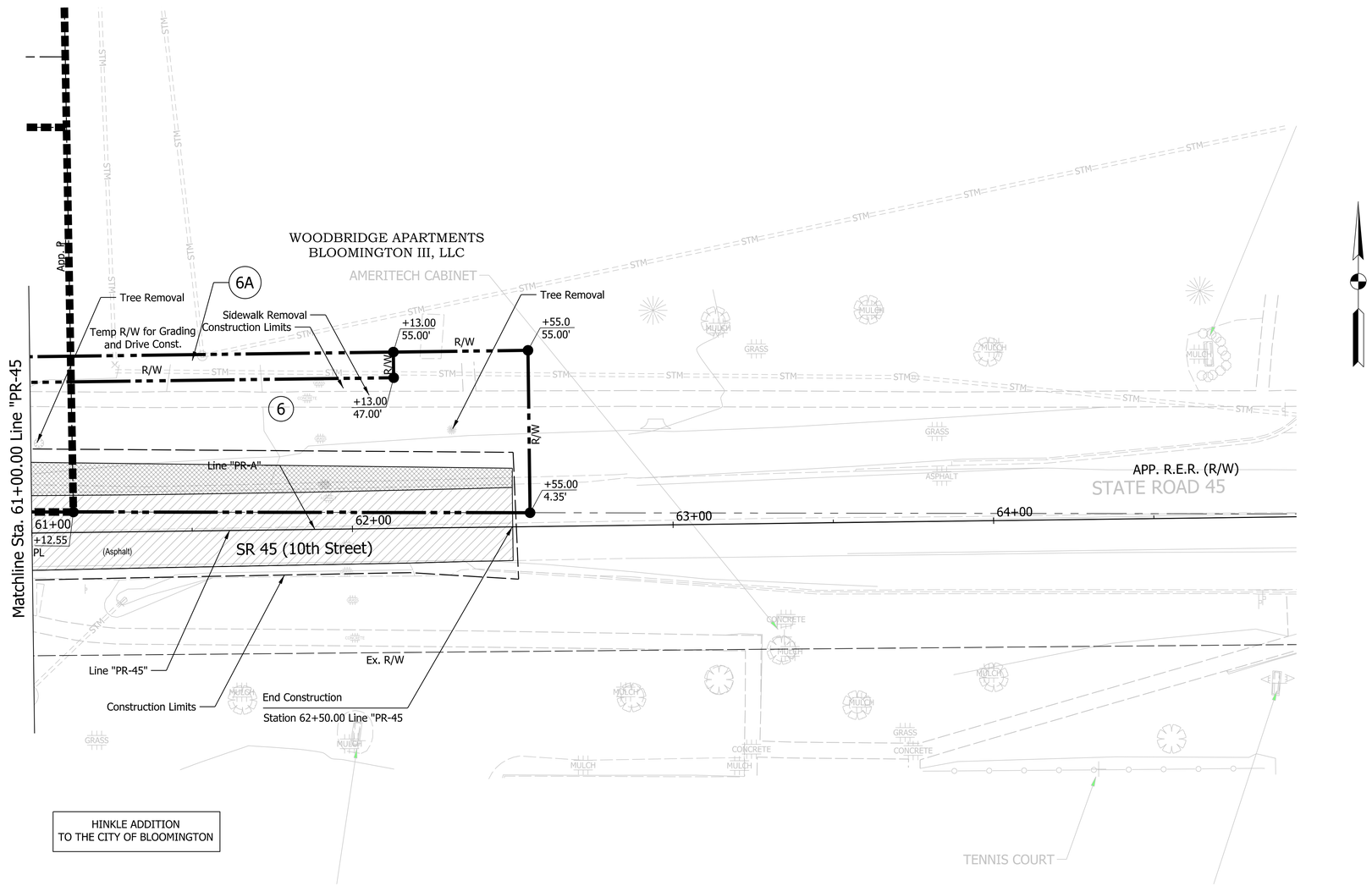

Denotes areas of Resurfacing

Denotes areas of Full Depth Reconstruction

Denotes areas of Widening

Notes:

1. All R/W on this sheet to be taken as shown.
2. All R/W on this sheet described from Line "PR-A" unless otherwise noted.
3. Line "PR-45" to be constructed.

NOT FOR CONSTRUCTION

RECOMMENDED FOR APPROVAL			3/20/2023
	DESIGN ENGINEER		DATE
DESIGNED: MS	3/20/2023	DRAWN: MM	3/20/2023
CHECKED: KT	3/20/2023	CHECKED: KT	3/20/2023

INDIANA DEPARTMENT OF TRANSPORTATION

RIGHT OF WAY DETAILS

SCALE	BRIDGE FILE
1"=20'	N/A
	DESIGNATION
	1800199
SURVEY BOOK	SHEETS
Electronic	26 of 29
CONTRACT	PROJECT
R-41465	1800199

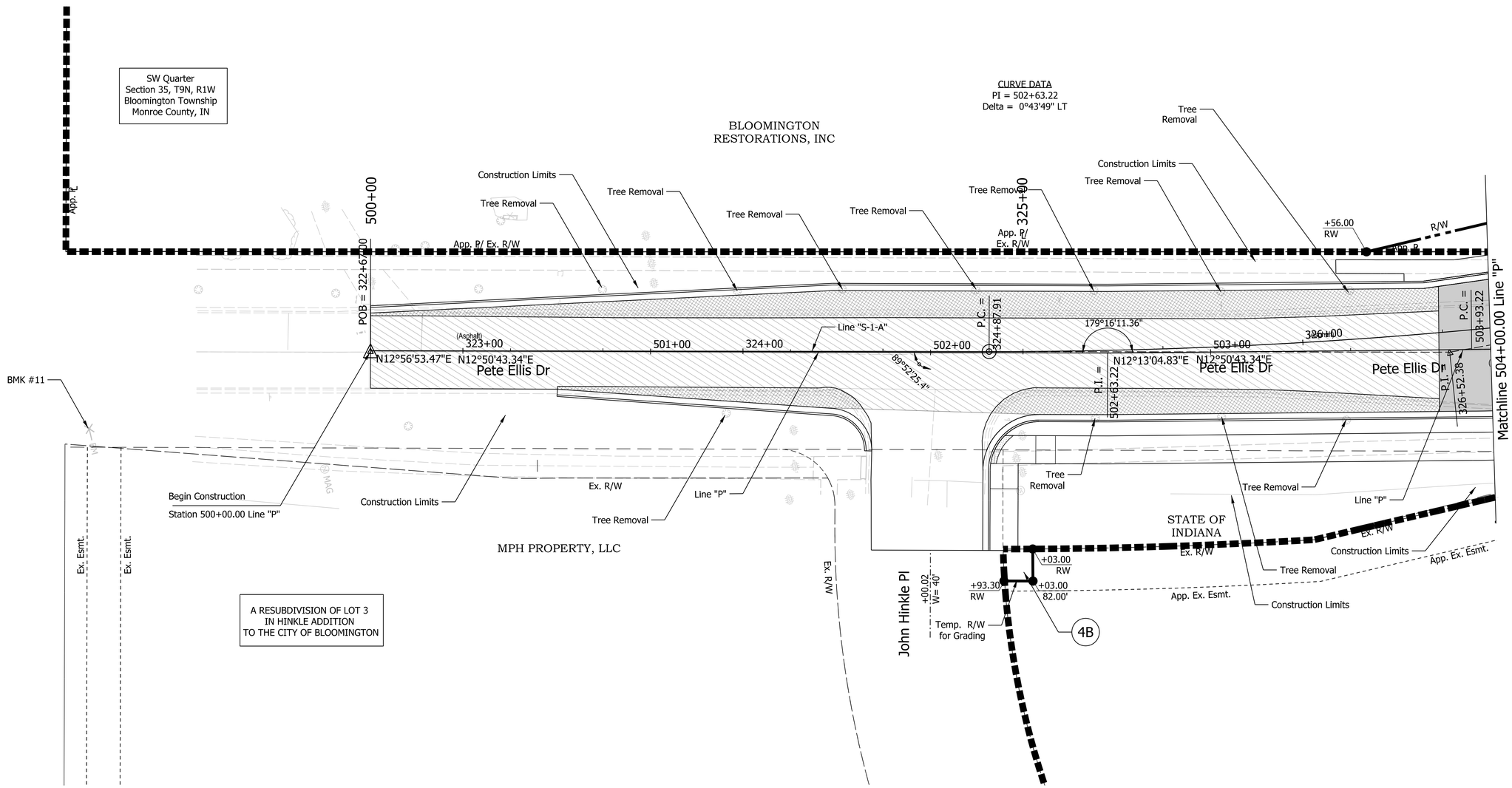

Denotes areas of Resurfacing

Denotes areas of Widening

Denotes areas of Full Depth Reconstruction

Notes:

1. All R/W on this sheet to be taken as shown.
2. All R/W on this sheet described from Line "S-1-A" unless otherwise noted.
3. Line "P" to be constructed.

NOT FOR CONSTRUCTION

RECOMMENDED FOR APPROVAL		3/20/2023	
	DESIGN ENGINEER	DATE	
DESIGNED: MS	3/20/2023	DRAWN: MM	3/20/2023
CHECKED: KT	3/20/2023	CHECKED: KT	3/20/2023

INDIANA DEPARTMENT OF TRANSPORTATION

RIGHT OF WAY DETAILS

SCALE	BRIDGE FILE
1"=20'	N/A
	DESIGNATION
	1800199
SURVEY BOOK	SHEETS
Electronic	27 of 29
CONTRACT	PROJECT
R-41465	1800199

PLOT_DATE$ PLOT_TIME$ AM_PM

File: L:\INDOT\18070904-10\Draw\Sheets\RW_Sht_RW Details_20_08.dgn
Model:$MODEL_NAME$

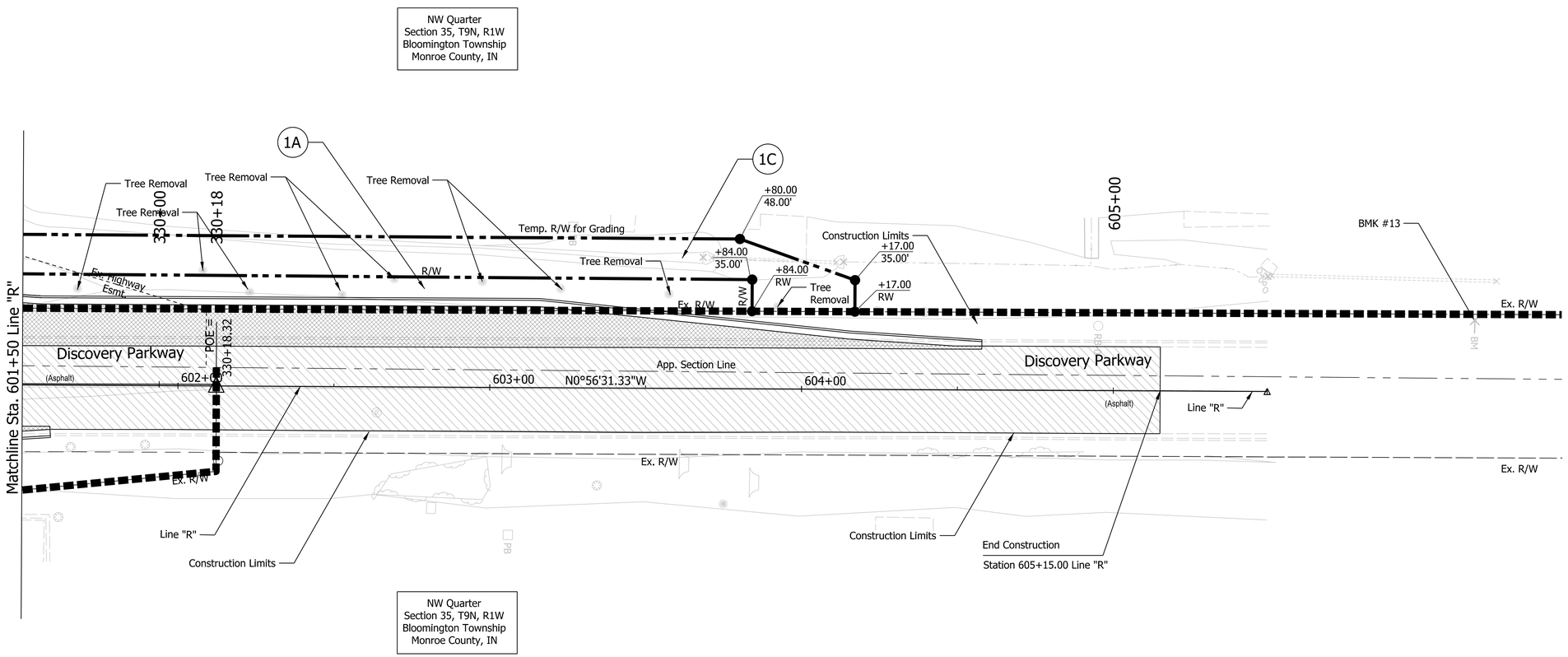

Denotes areas of Resurfacing

Denotes areas of Widening

Denotes areas of Full Depth Reconstruction

Notes:

1. All R/W on this sheet to be taken as shown.
2. All R/W on this sheet described from Line "R" unless otherwise noted.
3. Line "R" to be constructed.

NOT FOR CONSTRUCTION

RECOMMENDED FOR APPROVAL — DESIGN ENGINEER — 3/20/2023 DATE

DESIGNED: MS 3/20/2023 | DRAWN: MM 3/20/2023

CHECKED: KT 3/20/2023 | CHECKED: KT 3/20/2023

INDIANA DEPARTMENT OF TRANSPORTATION

RIGHT OF WAY DETAILS

SCALE	BRIDGE FILE
1"=20'	N/A
	DESIGNATION
	1800199

SURVEY BOOK	SHEETS		
Electronic	28	of	29
CONTRACT	PROJECT		
R-41465	1800199		

PlotSty: PLOT_DATE$ $TIME$ AM_PM

File: L:\INDOT\18070904-10\Draw\Sheets\RW_Sht_RW Details_20_09.dgn
Model: $MODEL_NAME$

PAVEMENT QUANTITIES AND APPROACH TABLE

LOCATION	DESCRIPTION (APPROACH TYPE OR CLASS)	WIDTH	LENGTH	RADII	DISTANCE BEYOND R/W LINE	SURFACE BEYOND R/W LINE: COMPACTED AGGREGATE BASE	SURFACE BEYOND R/W LINE: HMA	SURFACE BEYOND R/W LINE: CONCRETE	GRADE 1	GRADE 2	EXCAVATION: CUT	EXCAVATION: FILL	HMA FOR APPROACHES (LBS. PER SYD.): 165	HMA FOR APPROACHES (LBS. PER SYD.): 275	HMA MATERIALS (LBS. PER SYD.): QC/QA-HMA, 3, 70, SURFACE, 12.5 mm: 165	HMA MATERIALS: QC/QA-HMA, 3, 70, INTERMEDIATE, 12.5 mm: 440	HMA MATERIALS: QC/QA-HMA, 3, 70, BASE, 25.0 mm: 440	HMA MATERIALS: QC/QA-HMA, 3, 70, SURFACE, 12.5 mm: 220	HMA MATERIALS: HMA WEDGE AND LEVEL TYPE B	MILLING, ASPHALT, 1 1/2 IN.	ASPHALT FOR TACK COAT	SUBGRADE TREATMENT, TYPE IC	HMA PATCHING TYPE C: FULL DEPTH	HMA PATCHING TYPE C: PARTIAL DEPTH	PCCP FOR APPROACHES (TYPE): 6 IN.	PCCP FOR APPROACHES (TYPE): 9 IN.	SUBGRADE TREATMENT, TYPE II	DENSE GRADED SUBBASE	GEOGRID TYPE IB	JOINT ADHESIVE: SURFACE	JOINT ADHESIVE: INTERMEDIATE	LIQUID ASPHALT SEALANT	CURB RAMP, CONCRETE	CURB AND GUTTER, CONCRETE	SIDEWALK, CONCRETE	CURB, CONCRETE, REMOVE	CURB AND GUTTER, REMOVE	PAVEMENT, REMOVAL	REMARKS
		FT	FT	FT	FT	SYS	SYS	SYS	%	%	CYS	CYS	SYS	SYS	SYS	SYS	SYS	SYS		TONS	SYS	SYS	SYS	SYS	SYS	SYS	SYS	SYS	SYS	LFT	LFT	SYS	SYS	LFT	SYS	LFT	LFT	SYS	
SR 45 - Line "PR-A"																																								
Sta. 41+25 to Sta. 45+00	Mainline																																							
Sta. 41+53.34 Lt.	Public Road Approach	23.50	15.00	4 / 15	---																																			
Sta. 43+45.79 Rt.	Class I Drive	11.20	29.80	33 / 15	17.9																																			
Sta. 45+00 to Sta. 49+00	Mainline																																							
Sta. 45+54.85 Rt.	Class I Drive	10.50	29.50	36 / 16	16																																			
Sta. 46+03.50 Lt.	Class III Drive	47.00	40.00	20 / 20	---																																			
Sta. 49+00 to Sta. 55+00	Mainline				---																																			
Sta. 49+17.86 Rt.	Class I Drive	9.80	16.00	23 / 17	11																																			
Sta. 52+35.84 Rt.	Public Road Approach				---																																			
Sta. 52+39.53 Lt.	Public Road Approach				---																																			
Sta. 54+55.77 Lt.	Class III Drive	26.00	43.00	20 / 20	4																																			
Sta. 55+00 to Sta. 61+00	Mainline																																							
Sta. 57+91.90 Lt.	Class III Drive	26.00	28.00	20 / 20	8																																			
Sta. 59+75.00 Lt.	Class III Drive	25.00	36.50	25 / 25	2.5																																			
Sta. 55+00 to Sta. 61+00	Mainline																																							
Sta. 61+00 to Sta. 62+50	Mainline																																							
Pete Ellis Dr. - Line "P"																																								
Sta. 500+00 to Sta. 503+50	Mainline																																							
Sta. 502+00.02 Rt.	Public Road Approach	40.00	50.00	20 / 20	---																																			
Sta. 503+50 to Sta. 505+40.75	Mainline																																							
Discovery Parkway - Line "R"																																								
Sta. 600+00 to Sta. 601+50	Mainline																																							
Sta. 600+00 to Sta. 605+15	Mainline																																							

NOT FOR CONSTRUCTION

RECOMMENDED FOR APPROVAL — DESIGN ENGINEER — 3/20/2023 DATE

DESIGNED: MS 3/20/2023 | DRAWN: MM 3/20/2023

CHECKED: KT 3/20/2023 | CHECKED: KT 3/20/2023

INDIANA DEPARTMENT OF TRANSPORTATION

APPROACH TABLE

SCALE	BRIDGE FILE
	N/A
	DESIGNATION
	1800199

SURVEY BOOK	SHEETS
Electronic	29 of 29
CONTRACT	PROJECT
R-41465	1800199

PLOT_DATE$ PLOT_TIME$ AM_PM

File: L:\INDOT\18070904-10\Draw\Sheets\RW_Sht_Approach Table.dgn
Model:$MODEL_NAME$

PROJECT	DESIGNATION
1800086	1800086
CONTRACT	
R-42595	

KIN DESIGNATION	
DES. NO.	DESCRIPTION
1800199-LEAD	INTERSECTION IMPROVEMENT

INDIANA DEPARTMENT OF TRANSPORTATION

RIGHT-OF-WAY PLANS

ROUTE: SR 45 FROM RP 41+48 TO RP 41+84
INTERSECTION IMPROVEMENT WITH
ADDED LANES

PROJECT NO. 1800086 P.E.
1800086 R/W
1800086 CONST.

Project Description:

Intersection improvement with added lanes on SR 45 from SR 46 to west of Pete Ellis Drive / Discovery Parkway, in the City of Bloomington, in Sections 34 & 35, T-9-N, R-1-W, Bloomington Township, Monroe County, Indiana.

Gross Length: 0.16 Miles

Net Length: 0.16 Miles

Maximum Grade: 5.00%

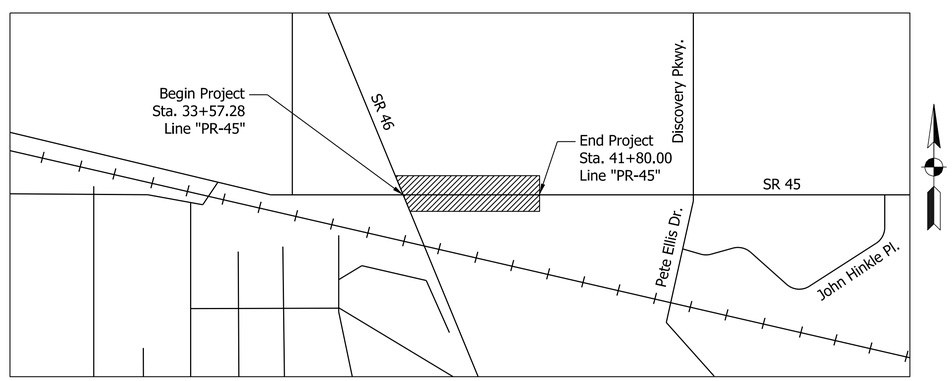

Project Location

Location Map
Monroe County
Scale: 1" = 2000'

TRAFFIC DATA		SR 45
A.A.D.T.	(2019)	15,165 V.P.D.
A.A.D.T.	(2044)	16,475 V.P.D.
D.H.V	(2044)	1771 V.P.H.
DIRECTIONAL DISTRIBUTION		50/50
TRUCKS		3.44 % A.A.D.T.
		4.44 % D.H.V.

DESIGN DATA	SR 45
DESIGN SPEED	40 M.P.H.
PROJECT DESIGN CRITERIA	4R, NON-FREEWAY
FUNCTIONAL CLASSIFICATION	URBAN COLLECTOR
RURAL/URBAN	URBAN
TERRAIN	LEVEL
ACCESS CONTROL	NONE

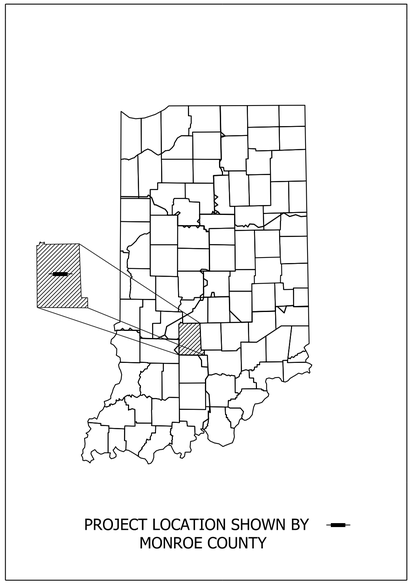

LATITUDE: 39° 10' 19" N LONGITUDE: 86° 30' 05" W

HUC12 No.: 051202080801

PRELIMINARY RIGHT-OF-WAY PLANS
OCTOBER 17, 2022

INDIANA DEPARTMENT OF TRANSPORTATION
STANDARD SPECIFICATIONS DATED 2022
TO BE USED WITH THESE PLANS

CMT

© Copyright CMT, Inc.

8790 PURDUE ROAD
INDIANAPOLIS, IN 46268-6128
PHONE: (317) 298-4500

NOT FOR CONSTRUCTION

PLANS PREPARED BY: CRAWFORD, MURPHY & TILLY, INC. (317) 298-4500 PHONE NUMBER

CERTIFIED BY: 3/20/2023 DATE

APPROVED FOR LETTING: INDIANA DEPARTMENT OF TRANSPORTATION DATE

BRIDGE FILE
DESIGNATION
1800086

SURVEY BOOK	SHEETS		
	1	of	14
CONTRACT	PROJECT		
R-42595	1800086		

L:\INDOT\18070904-14\Draw\Sheets\RW_RD_Sht_Title.dgn

UTILITIES

Duke Energy- Eletric
Cindy Rowland
390 N. Main Street
Martinsville, IN 46151
(317) 776-5341
cindy.rowland@duke-energy.com

Lightbound Telecommunications
Ean Elder
731 W. Henry Street
Indianapolis, IN 46201
(317) 508-6346
eelder@lightbound.net

Duke Energy- Electric
Dewayne Wright
390 N. Main Street
Martinsville, IN 46151
(317) 838-2044
DEI-Tline-Coord@duke-energy.com

Bloomington Utilities
Jane Fleig
600 E. Miller Road
Bloomington, IN 47402
(812) 349-3631
fleigi@bloomington.in.gov

Smithville Communications
Kimberly Pitcher
1600 W. Temperance Street
Ellettsville, IN 47429
(812) 935-2315
kimberly.pitcher@smithville.com

Zayo Bandwidth
Waylon Higgins
8209 Castlegate Drive
Indianapolis, IN 46256
(765) 341-1199
waylon.higgins@zayo.com

Indiana University
Pankoj K. Patel
820 N. Walnut
Bloomington, IN 47405
(812) 855-7894
ppatel@iu.edu

Comcast Cable
Rhonda Dalton
688 Industrial Drive
Elmhurst, IL 60126
(224) 229-5863
rhonda.dalton@comcast.com

Vectren Energy- Gas
Jon Eastham
1800 W. 26th Street
Muncie, IN 47302
(765) 287-2119
publicproject@vectren.com

Bloomington Utilities
Phil Peden
600 E. Miller Road
Bloomington, IN 47402
(812) 349-3634
pedenp@bloominton.in.gov

AT&T Distribution
Mattew Spindler
240 N. Meridian Street
Indianapolis, IN 46204
(317) 265-3050
ms4822@att.com

GENERAL NOTES

All earth shoulders and cut and fill slopes shall be plain or mulch seeded, except where sodding is specified.

The Contractor shall ensure that safe access is maintained to all residences and businesses during all phases of construction.

All removal items not paid for directly will be included in the lump sum cost of "Clearing Right of Way."

It is the Contractor's responsibility to contact any and all utility companies within the limits of the project three weeks prior to any construction.

The Contractor shall verify all drainage structure and pipe types, material, wall thickness, inverts, depths, diameter, sizes and conditions prior to ordering materials for adjustments, connections, extensions or alterations. The Contractor shall assume responsibility for proper fit.

The Contractor shall transition pavement slope through corner radii at a constant rate so as to match the adjacent typical sections. Wedge and level material or other material accepted by the Engineer shall be used as necessary to provide positive drainage of the intersections.

Existing curb types may vary at streets. The Contractor shall inspect curb prior to beginning work to assure proper fit and transition.

The Contractor shall ensure that positive drainage is maintained along curb and gutter flowlines and at intersections after the completion of curb ramp construction.

Sidewalks and curb ramps have been designed to a cross slope of 1.50% or as specified otherwise herein. If field conditions differ, the Contractor shall ensure sidewalk and curb ramp cross slope is no greater than 2.00% in final constructed condition.

INDEX

SHEET NO.	DRAWINGS INDEX
1	TITLE SHEET
2	INDEX & GENERAL NOTES
3 - 6	TYPICAL CROSS SECTIONS
7 - 8	LOCATION CONTROL ROUTE SURVEY
9	PLAT NO. 1
10 - 11	PLAN AND PROFILE
12 - 13	RIGHT OF WAY DETAILS
14	APPROACH TABLE

REVISIONS

SHEET NO.	DATE	REVISED

NOT FOR CONSTRUCTION

RECOMMENDED FOR APPROVAL _____ DESIGN ENGINEER DATE

DESIGNED: MLM 3/20/2023 DRAWN: MLM 3/20/2023

CHECKED: KLT 3/20/2023 CHECKED: KLT 3/20/2023

INDIANA
DEPARTMENT OF TRANSPORTATION

INDEX & GENERAL NOTES

SCALE	BRIDGE FILE
N/A	
	DESIGNATION
	1800086
SURVEY BOOK	SHEETS
	2 of 14
CONTRACT	PROJECT
R-42595	1800086

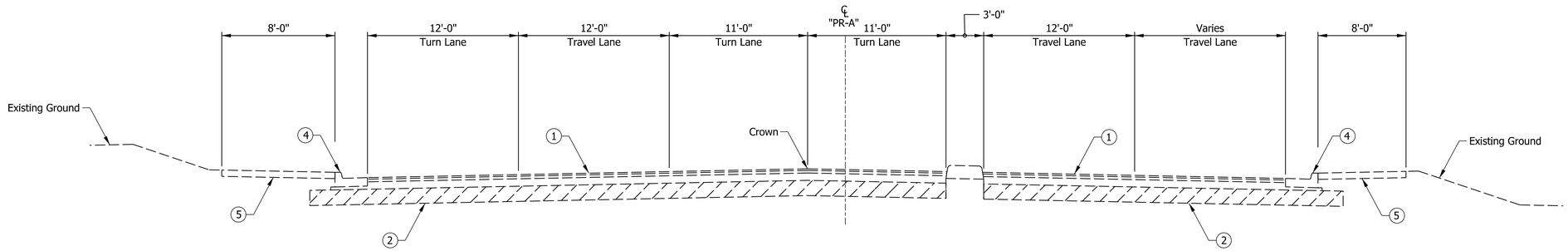

EXISTING TYPICAL SECTION SR 45

STA. 33+48 "PR-A"to STA. 36+22 "PR-A"

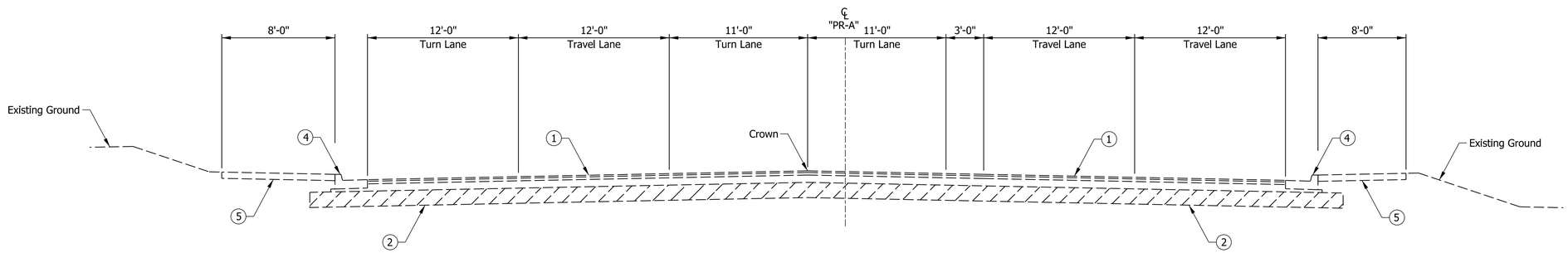

EXISTING TYPICAL SECTION SR 45

STA. 36+22 "PR-A" to STA. 40+38 "PR-A"

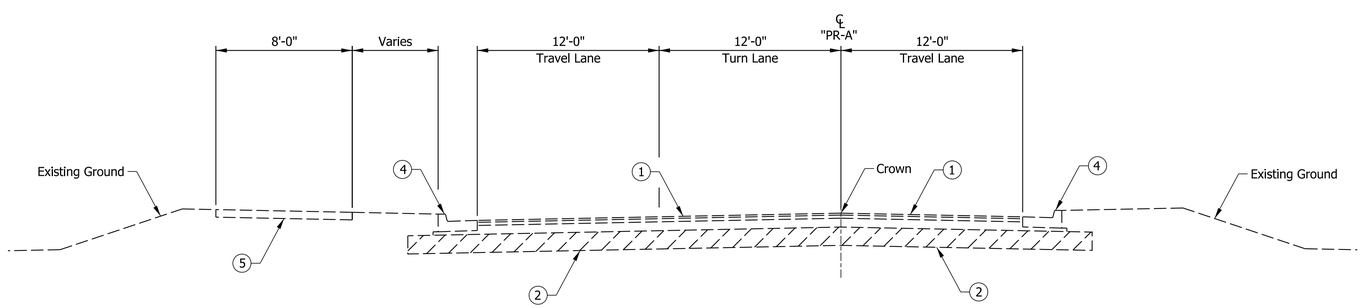

EXISTING TYPICAL SECTION SR 45

STA. 40+38 "PR-A" to STA. 42+98.22 "PR-A"

Legend:

1. Existing Asphalt Pavement
2. Existing Subgrade
4. Existing Curb and Gutter
5. Existing Sidewalk / Multi-Use Path

NOT FOR CONSTRUCTION

RECOMMENDED FOR APPROVAL

DESIGN ENGINEER DATE

DESIGNED: MLM 3/20/2023 DRAWN: MLM 3/20/2023

CHECKED: KLT 3/20/2023 CHECKED: KLT 3/20/2023

INDIANA
DEPARTMENT OF TRANSPORTATION

EXISTING TYPICAL SECTIONS
SR 45

SCALE	BRIDGE FILE
1"=5'	
	DESIGNATION
	1800086
SURVEY BOOK	SHEETS
	TYP_01_AL of 14
CONTRACT	PROJECT
R-42595	1800086

L:\INDOT\18070904-14\Draw\Sheets\RD_Sht_Typical Sections.dgn

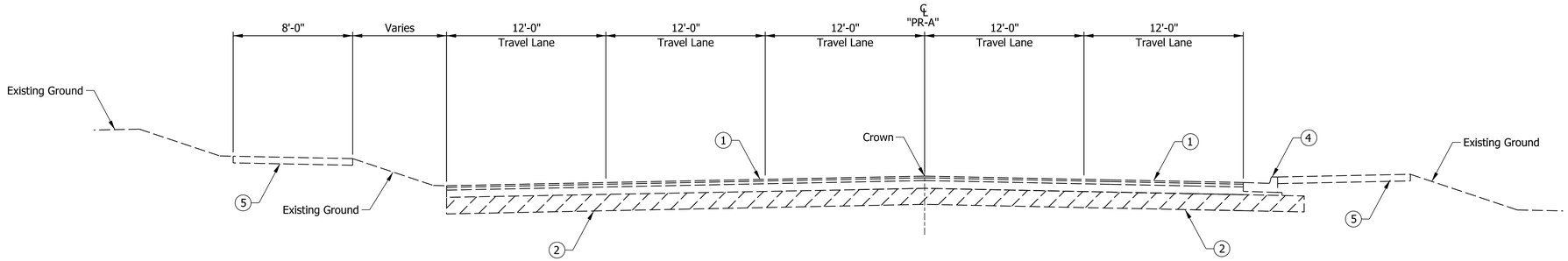

EXISTING TYPICAL SECTION SR 45

STA. 42+98 "PR-A" to STA. 45+44 "PR-A"

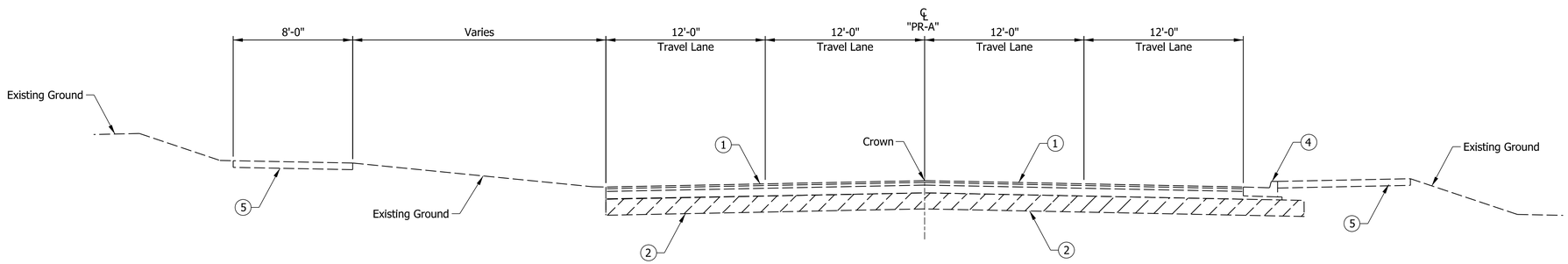

EXISTING TYPICAL SECTION SR 45

STA. 45+44 "PR-A" to STA. 47+39 "PR-A"

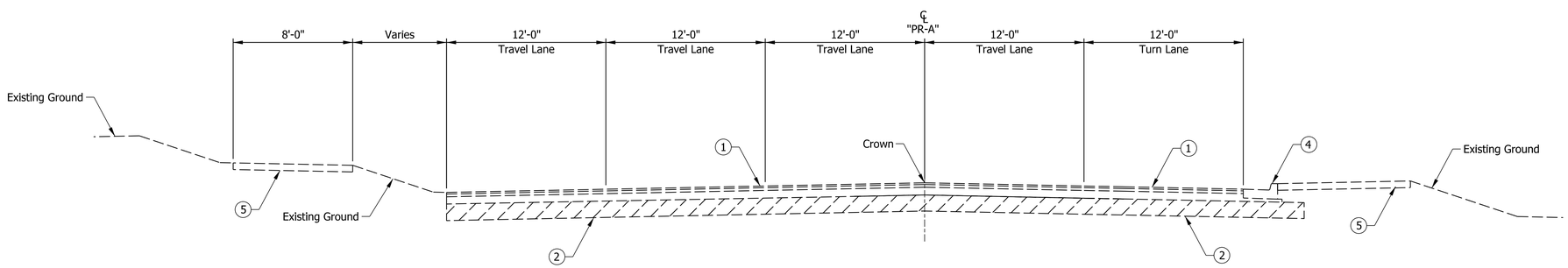

EXISTING TYPICAL SECTION SR 45

STA. 47+39 "PR-A" to STA. 49+77.79 "PR-A"

Legend:

1. Existing Asphalt Pavement
2. Existing Subgrade
4. Existing Curb and Gutter
5. Existing Sidewalk / Multi-Use Path

NOT FOR CONSTRUCTION

RECOMMENDED FOR APPROVAL _____ DESIGN ENGINEER DATE

DESIGNED: MLM 3/20/2023 DRAWN: MLM 3/20/2023

CHECKED: KLT 3/20/2023 CHECKED: KLT 3/20/2023

INDIANA
DEPARTMENT OF TRANSPORTATION

EXISTING TYPICAL SECTIONS
SR 45

SCALE	BRIDGE FILE
1"=5'	
	DESIGNATION
	1800086
SURVEY BOOK	SHEETS
	TYP_02_AL of 14
CONTRACT	PROJECT
R-42595	1800086

L:\INDOT\18070904-14\Draw\Sheets\RD_Sht_Typical Sections.dgn

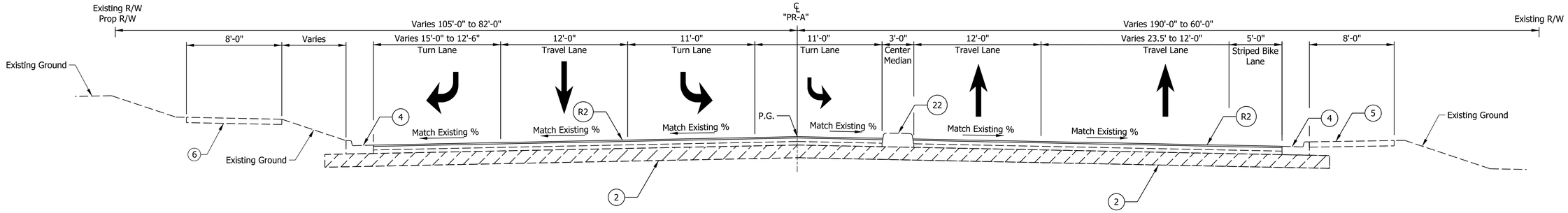

TYPICAL SECTION SR 45

STA. 33+57.28 "PR-45" to STA 35+20.36 "PR-45"

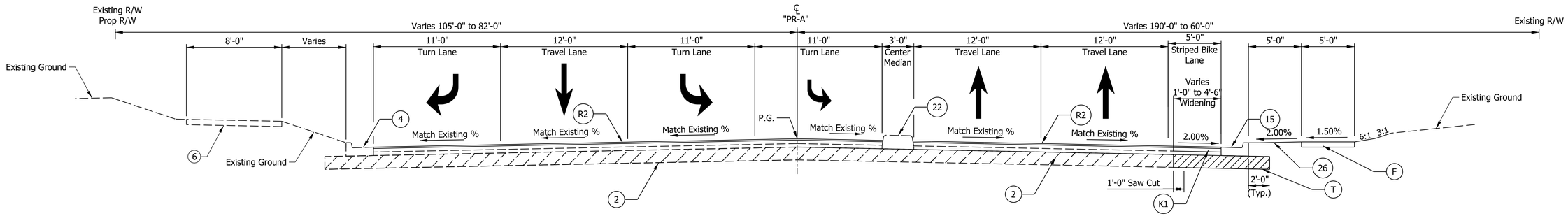

TYPICAL SECTION SR 45

STA. 35+20.36 "PR-45" to STA 36+22.03 "PR-45"

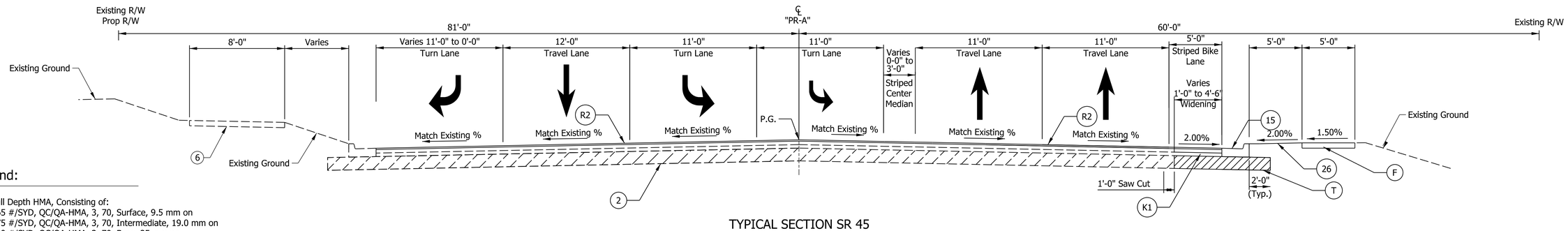

TYPICAL SECTION SR 45

STA. 36+22.03 "PR-45" to STA 37+49.50 "PR-45"

Legend:

- (K) Full Depth HMA, Consisting of:
  165 #/SYD, QC/QA-HMA, 3, 70, Surface, 9.5 mm on
  275 #/SYD, QC/QA-HMA, 3, 70, Intermediate, 19.0 mm on
  440 #/SYD, QC/QA-HMA, 3, 70, Base, 25 mm on
  440 #/SYD, QC/QA-HMA, 3, 70, Base, 25 mm on
- (R2) Asphalt Milling and Overlay, Consisting of:
  Milling, Profile
  165 #/SYD, QC/QA-HMA, 3, 70, Surface, 12.5 mm
- (T) Subgrade Treatment, Type IC
- (R1) HMA Wedge and Level, Type B
  165 #/SYD, QC/QA-HMA, 3, 70, Surface, 9.5 mm on
  275 #/SYD, QC/QA-HMA, 3, 70, Intermediate, 19.0 mm
- (F) Sidewalk, Concrete
- (D1) HMA for Sidewalks, Consisting of:
  165 #/SYD, HMA Surface Type B on
  275 #/SYD, HMA Intermediate Type B on
  6 in. Compacted Aggregate #53, Base
- (15) Curb and Gutter, Concrete
- (16) Center Curb, A Concrete
- (17) Curb and Gutter, Modified
- (K1) Widening with HMA Type C, Consisting of:
  165 #/SYD, QC/QA-HMA, 3, 70, Surface, 9.5 mm on
  275 #/SYD, HMA Intermediate, Type C, 19.0 mm on
  880 #/SYD, HMA Base, Typce C
- (26) Seed Mixture, U
  Fertilizer
  Mulching Material
  Plant Growth Layer
- (2) Existing Subgrade
- (4) Existing Curb and Gutter
- (5) Existing Sidewalk
- (6) Existing Multi-Use Path

Note to Reviewer
Pavement Design to be determined by INDOT and will be provided in a future submittal.

NOT FOR CONSTRUCTION

RECOMMENDED FOR APPROVAL _____ DESIGN ENGINEER DATE

DESIGNED: MLM 3/20/2023 DRAWN: MLM 3/20/2023

CHECKED: KLT 3/20/2023 CHECKED: KLT 3/20/2023

INDIANA
DEPARTMENT OF TRANSPORTATION

TYPICAL SECTIONS
SR 45

SCALE	BRIDGE FILE
1"=5'	
	DESIGNATION
	1800086
SURVEY BOOK	SHEETS
	TYP_03_AL of 14
CONTRACT	PROJECT
R-42595	1800086

L:\INDOT\18070904-14\Draw\Sheets\RD_Sht_Typical Sections.dgn

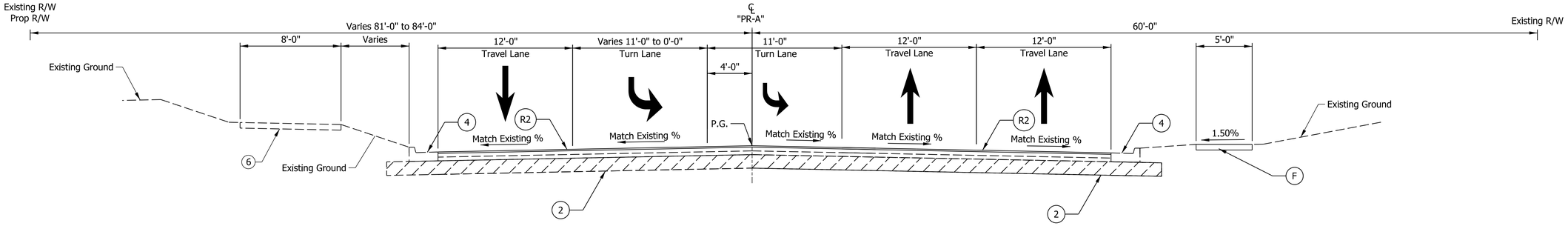

TYPICAL SECTION SR 45

STA. 37+49.50 "PR-45" to STA 38+09.33 "PR-45"

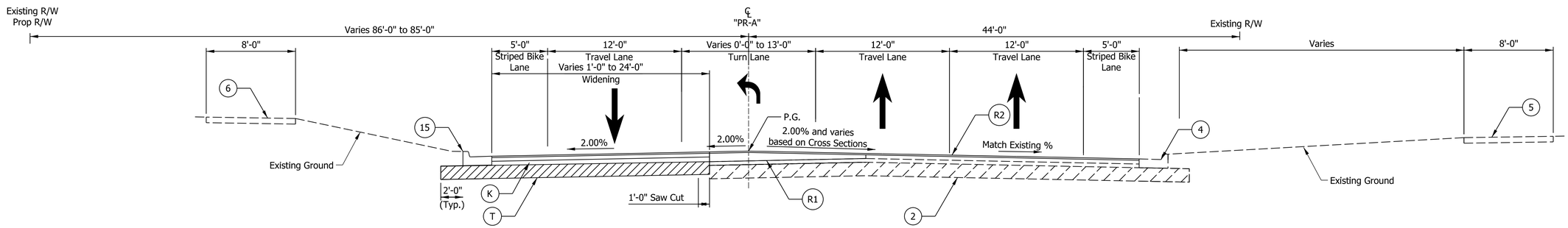

TYPICAL SECTION SR 45

STA. 38+09.33 "PR-45" to STA 41+72.42 "PR-45"

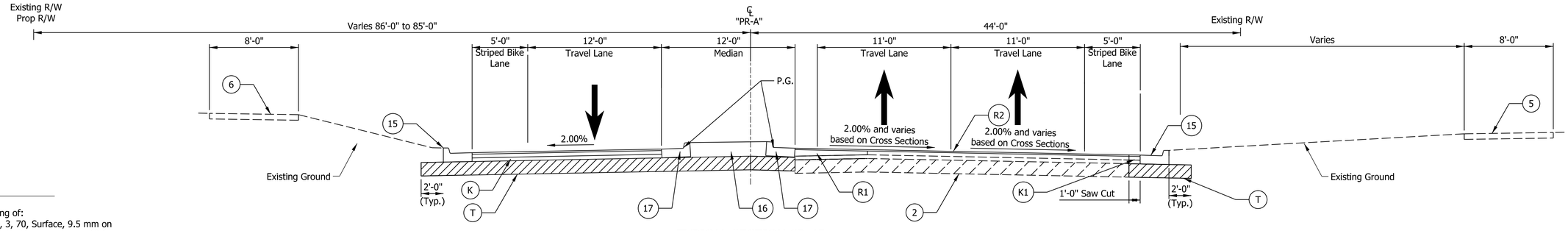

TYPICAL SECTION SR 45

STA. 41+72.42 "PR-45" to 41+80.00 "PR-45"

Legend:

- (K) Full Depth HMA, Consisting of:
  165 #/SYD, QC/QA-HMA, 3, 70, Surface, 9.5 mm on
  275 #/SYD, QC/QA-HMA, 3, 70, Intermediate, 19.0 mm on
  440 #/SYD, QC/QA-HMA, 3, 70, Base, 25 mm on
  440 #/SYD, QC/QA-HMA, 3, 70, Base, 25 mm on
- (R2) Asphalt Milling and Overlay, Consisting of:
  Milling, Profile
  165 #/SYD, QC/QA-HMA, 3, 70, Surface, 12.5 mm
- (T) Subgrade Treatment, Type IC
- (R1) HMA Wedge and Level, Type B
  165 #/SYD, QC/QA-HMA, 3, 70, Surface, 9.5 mm on
  275 #/SYD, QC/QA-HMA, 3, 70, Intermediate, 19.0 mm
- (F) Sidewalk, Concrete
- (D1) HMA for Sidewalks, Consisting of:
  165 #/SYD, HMA Surface Type B on
  275 #/SYD, HMA Intermediate Type B on
  6 in. Compacted Aggregate #53, Base
- (15) Curb and Gutter, Concrete
- (16) Center Curb, A Concrete
- (17) Curb and Gutter, Modified
- (K1) Widening with HMA Type C, Consisting of:
  165 #/SYD, QC/QA-HMA, 3, 70, Surface, 9.5 mm on
  275 #/SYD, HMA Intermediate, Type C, 19.0 mm on
  880 #/SYD, HMA Base, Typce C
- (26) Seed Mixture, U
  Fertilizer
  Mulching Material
  Plant Growth Layer
- (2) Existing Subgrade
- (4) Existing Curb and Gutter
- (5) Existing Sidewalk
- (6) Existing Multi-Use Path

Note to Reviewer
Pavement Design to be determined by INDOT and will be provided in a future submittal.

NOT FOR CONSTRUCTION

RECOMMENDED FOR APPROVAL _____ DESIGN ENGINEER DATE

DESIGNED: MLM 3/20/2023 DRAWN: MLM 3/20/2023

CHECKED: KLT 3/20/2023 CHECKED: KLT 3/20/2023

INDIANA
DEPARTMENT OF TRANSPORTATION

TYPICAL SECTIONS
SR 45

SCALE	BRIDGE FILE
1"=5'	
	DESIGNATION
	1800086
SURVEY BOOK	SHEETS
	TYP_04_AL of 14
CONTRACT	PROJECT
R-42595	1800086

L:\INDOT\18070904-14\Draw\Sheets\RD_Sht_Typical Sections.dgn

Des. No. 1800086

(10) INDIANA UNIVERSITY FOUNDATION, INC.

Des. No. 1800199

(1) STATE OF INDIANA PARCEL 6

(2) CITY OF BLOOMINGTON, INDIANA

(3) CITY OF BLOOMINGTON BOARD OF PUBLIC WORKS

(4) STATE OF INDIANA PARCEL 6A

(5) GRANT OF EASEMENT DUKE ENERGY INDIANA, LLC

(6) STATE OF INDIANA PARCEL 8

(7) STATE OF INDIANA PARCEL 6

(8) PERPETUAL HIGHWAY EASEMENT STATE OF INDIANA PARCEL 5A

(9) DUKE ENERGY INDIANA, LLC

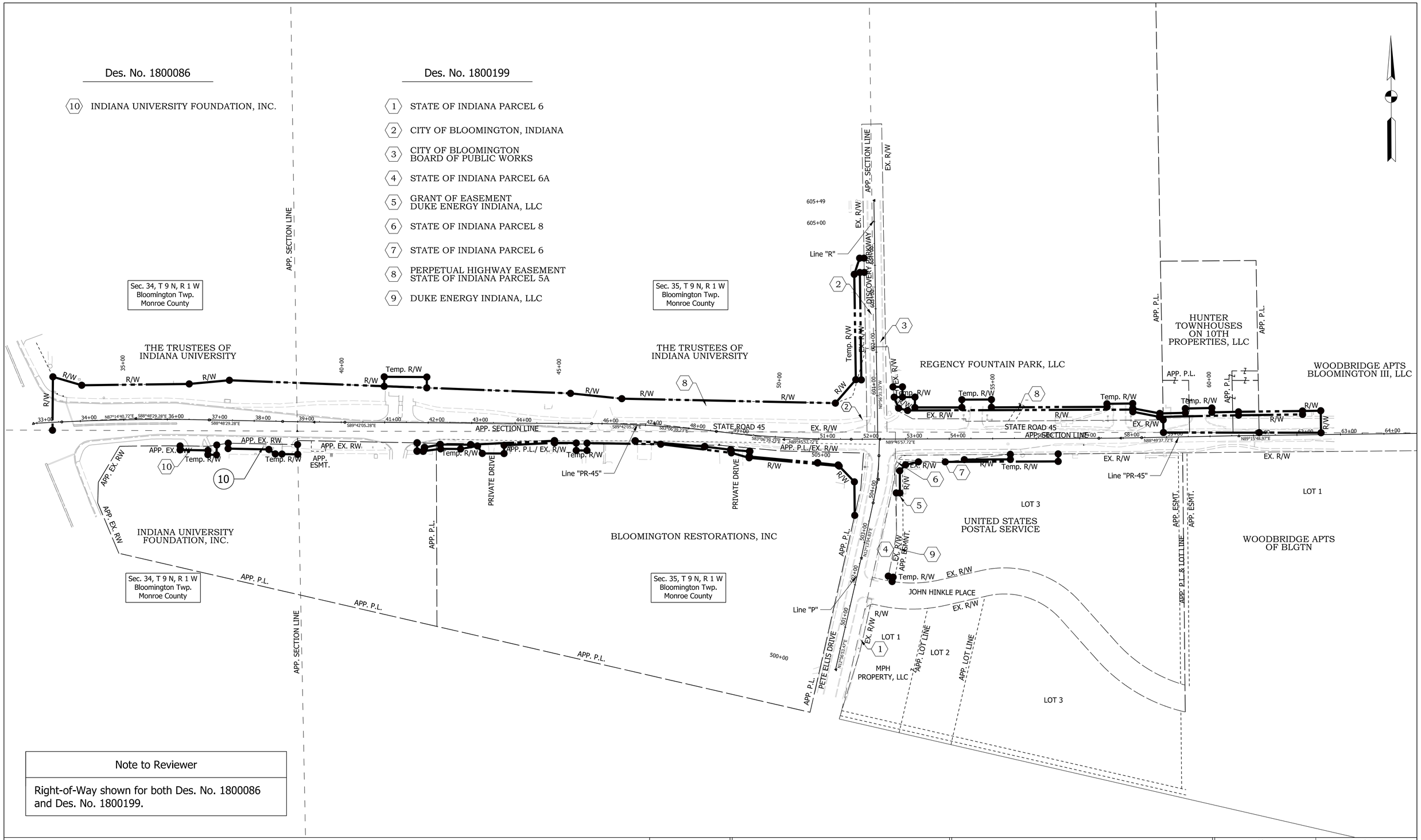

Note to Reviewer
Right-of-Way shown for both Des. No. 1800086 and Des. No. 1800199.

NOT FOR CONSTRUCTION

RECOMMENDED FOR APPROVAL _____ DESIGN ENGINEER DATE

DESIGNED: MLM 3/20/2023 DRAWN: MLM 3/20/2023

CHECKED: KLT 3/20/2023 CHECKED: KLT 3/20/2023

INDIANA DEPARTMENT OF TRANSPORTATION

PLAT NO. 1

SCALE	BRIDGE FILE
1"=100'	
	DESIGNATION
	1800086
SURVEY BOOK	SHEETS
	9 of 14
CONTRACT	PROJECT
R-42595	1800086

L:\INDOT\18070904-14\Draw\Sheets\RD_Sht_Plat No 1.dgn

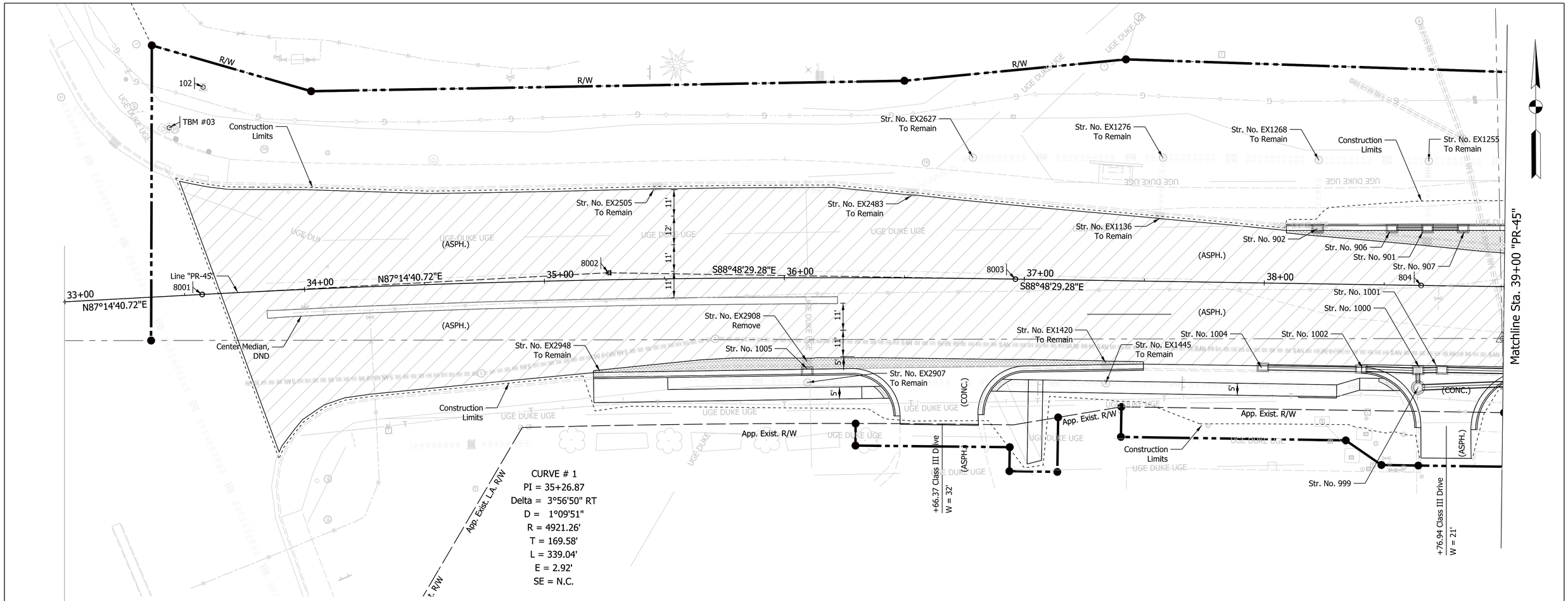

EARTHWORK SUMMARY TABLE
SR 45 (Line "PR-45")

Common Excavation (CYS)	
Roadway & Grading	1207
Undercuts	0
Total Excavation	1207
Fill (CYS)	
Fill + 15 %	8
Waste (CYS)	1199
Benching (CYS)	NA
Rock Excavation (CYS)	
Roadway & Grading	0

Note to Reviewer

See Drainage Profile sheets for storm sewer details.

BENCHMARK INFORMATION:
TBM#03 - Cut "X" NE Corner Concrete Strain Pole Base NE Quad of SR 45 & SR 46.
Sta. 33+47.25 "A", 70.03 Lt., Elev. 846.49

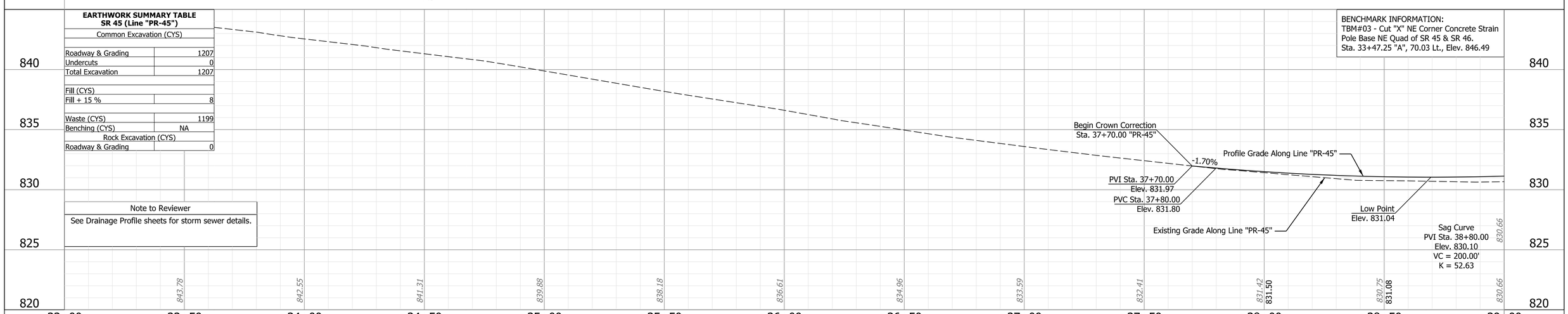

LEGEND

Widening - Full Depth HMA

Resurfacing - Asphalt Milling and Overlay

	NORTH	EAST	Station
8001	198823.3815	786824.6182	33+57.15 "A", 0.04' Rt.
102	198909.7550	786825.5960	33+62.19 "A", 86.19' Lt.
8002	198831.5732	786994.0397	35+26.70 "A", 2.91' Lt.
8003	198828.0103	787163.6306	36+96.26 "A", 0.05' Rt.
804	198824.5379	787332.7045	P.C. 38+65.38 "A"

NOT FOR CONSTRUCTION

RECOMMENDED FOR APPROVAL _____ DESIGN ENGINEER DATE

DESIGNED: MLM 3/20/2023 DRAWN: MLM 3/20/2023

CHECKED: KLT 3/20/2023 CHECKED: KLT 3/20/2023

INDIANA
DEPARTMENT OF TRANSPORTATION

PLAN AND PROFILE
LINE "PR-45"

HORIZONTAL SCALE	BRIDGE FILE
1"=20'	
VERTICAL SCALE	DESIGNATION
1"=5'	1800086
SURVEY BOOK	SHEETS
	10 of 14
CONTRACT	PROJECT
R-42595	1800086

L:\INDOT\18070904-14\Draw\Sheets\RD_Sht_PP_20_01.dgn

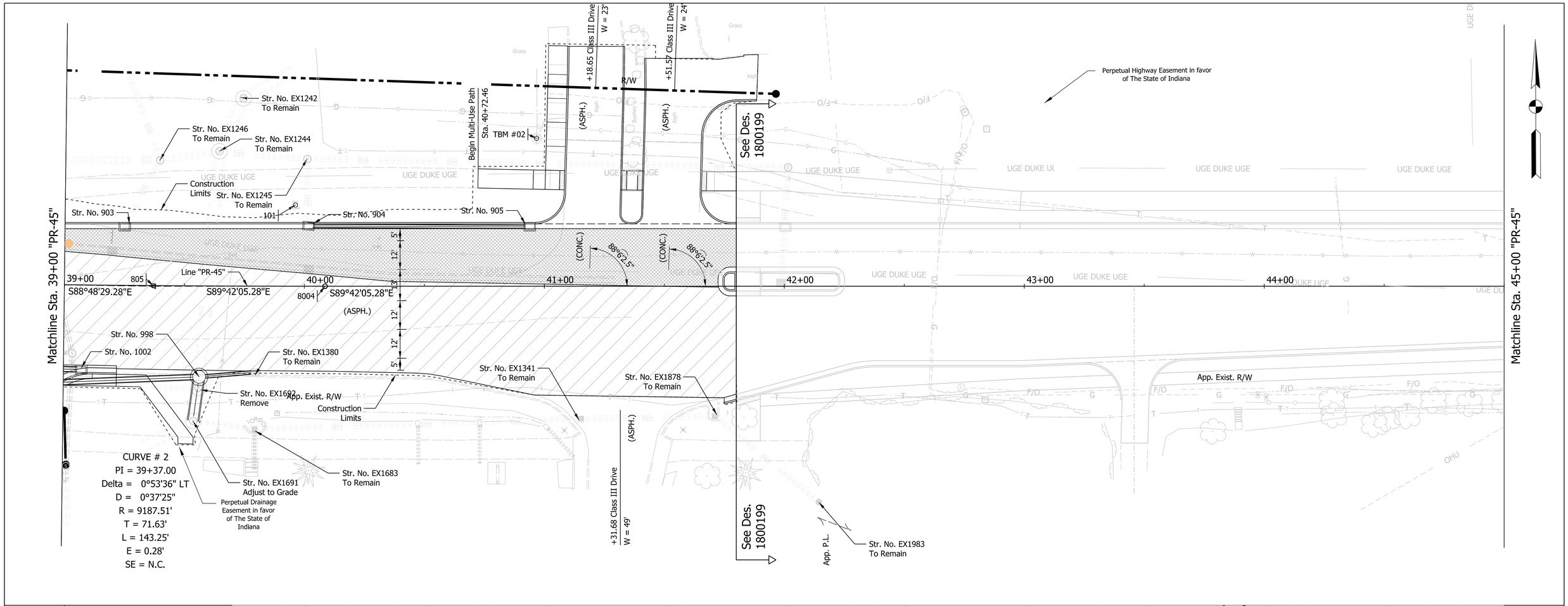

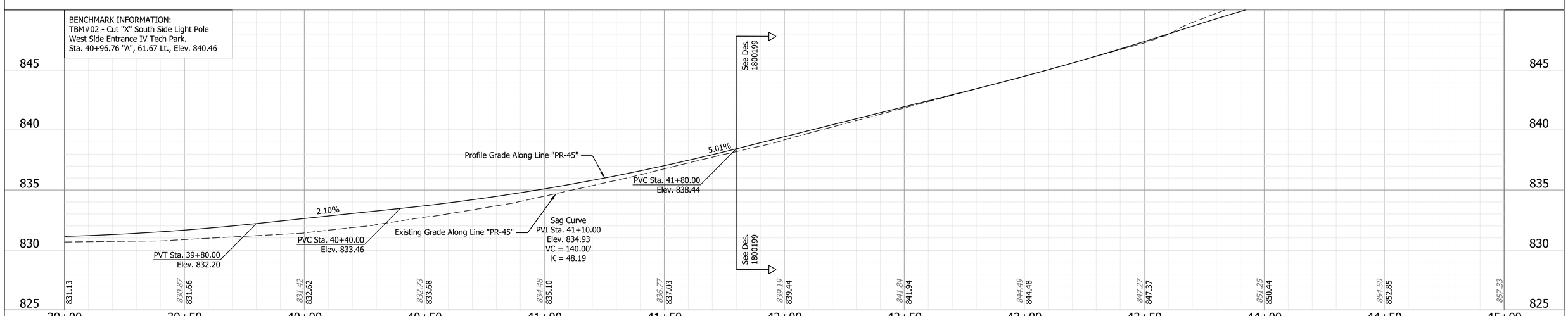

LEGEND

Widening - Full Depth HMA

Resurfacing - Asphalt Milling and Overlay

805	NORTH 198823.0481 EAST 787404.3146	101	NORTH 198856.5720 EAST 787463.7540	8004	NORTH 198822.7111 EAST 787475.9506	100	NORTH 198839.0760 EAST 787944.5060
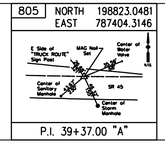		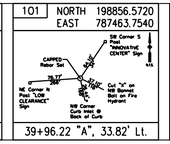		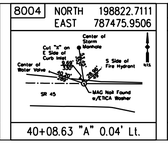		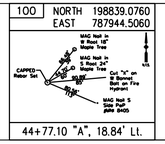	
P.I. 39+37.00 "A"		39+96.22 "A", 33.82' Lt.		40+08.63 "A" 0.04' Lt.		44+77.10 "A", 18.84' Lt.	

NOT FOR CONSTRUCTION

RECOMMENDED FOR APPROVAL _____ DESIGN ENGINEER _____ DATE

DESIGNED: MLM 3/20/2023 DRAWN: MLM 3/20/2023

CHECKED: KLT 3/20/2023 CHECKED: KLT 3/20/2023

INDIANA
DEPARTMENT OF TRANSPORTATION

PLAN AND PROFILE
LINE "PR-45"

HORIZONTAL SCALE	BRIDGE FILE
1"=20'	
VERTICAL SCALE	DESIGNATION
1"=5'	1800086
SURVEY BOOK	SHEETS
	11 of 14
CONTRACT	PROJECT
R-42595	1800086

L:\INDOT\18070904-14\Draw\Sheets\RD_Sht_PP_20_02.dgn

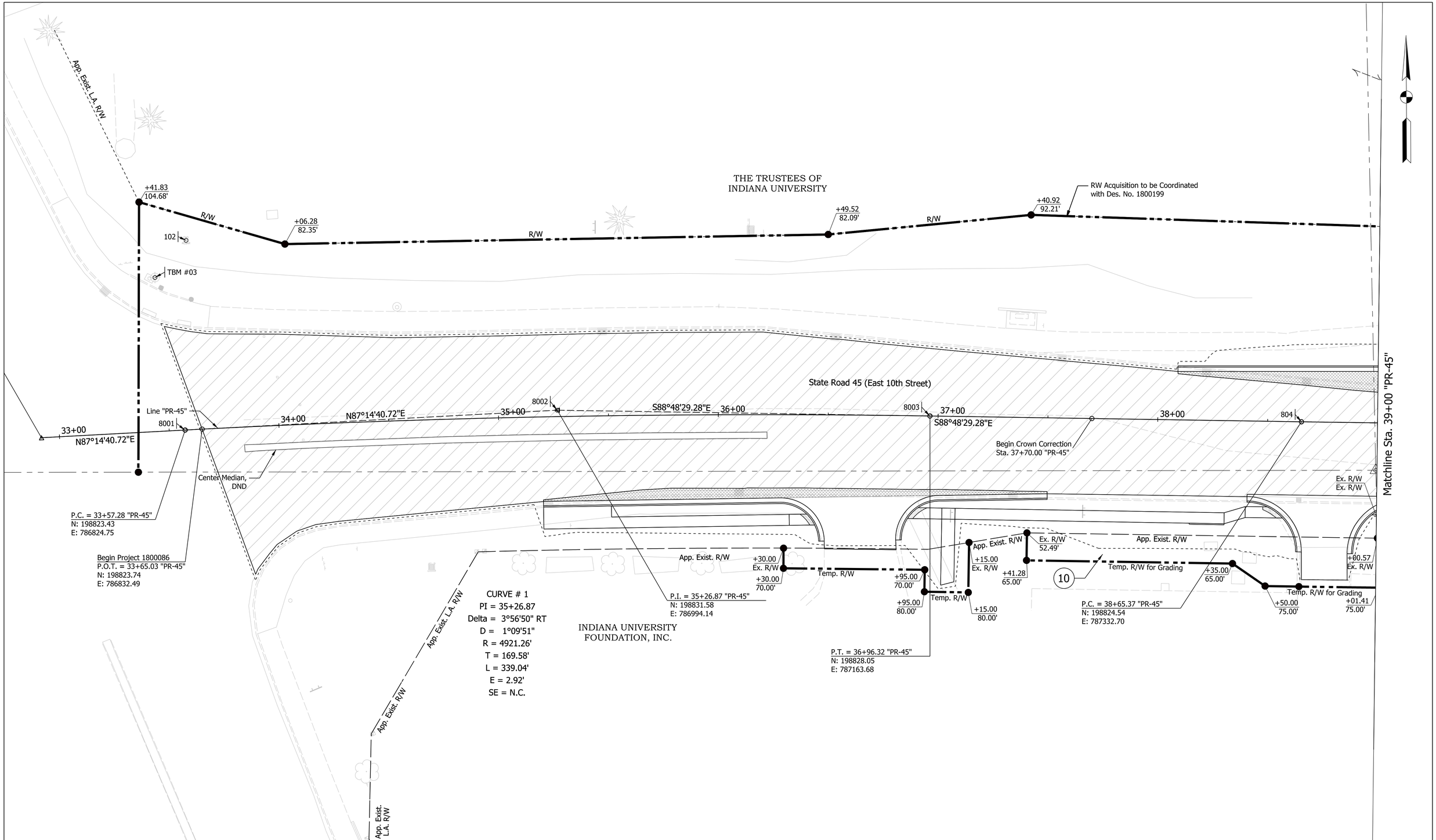

LEGEND

Widening - Full Depth HMA

Resurfacing - Asphalt Milling and Overlay

NOT FOR CONSTRUCTION

RECOMMENDED FOR APPROVAL _____ DESIGN ENGINEER DATE

DESIGNED: MLM	3/20/2023	DRAWN: MLM	3/20/2023
CHECKED: KLT	3/20/2023	CHECKED: KLT	3/20/2023

INDIANA
DEPARTMENT OF TRANSPORTATION

RIGHT OF WAY DETAILS

SCALE	BRIDGE FILE
1"=20'	
	DESIGNATION
	1800086
SURVEY BOOK	SHEETS
	12 of 14
CONTRACT	PROJECT
R-42595	1800086

L:\INDOT\18070904-14\Draw\Sheets\RD_Sht_RW_20_01.dgn

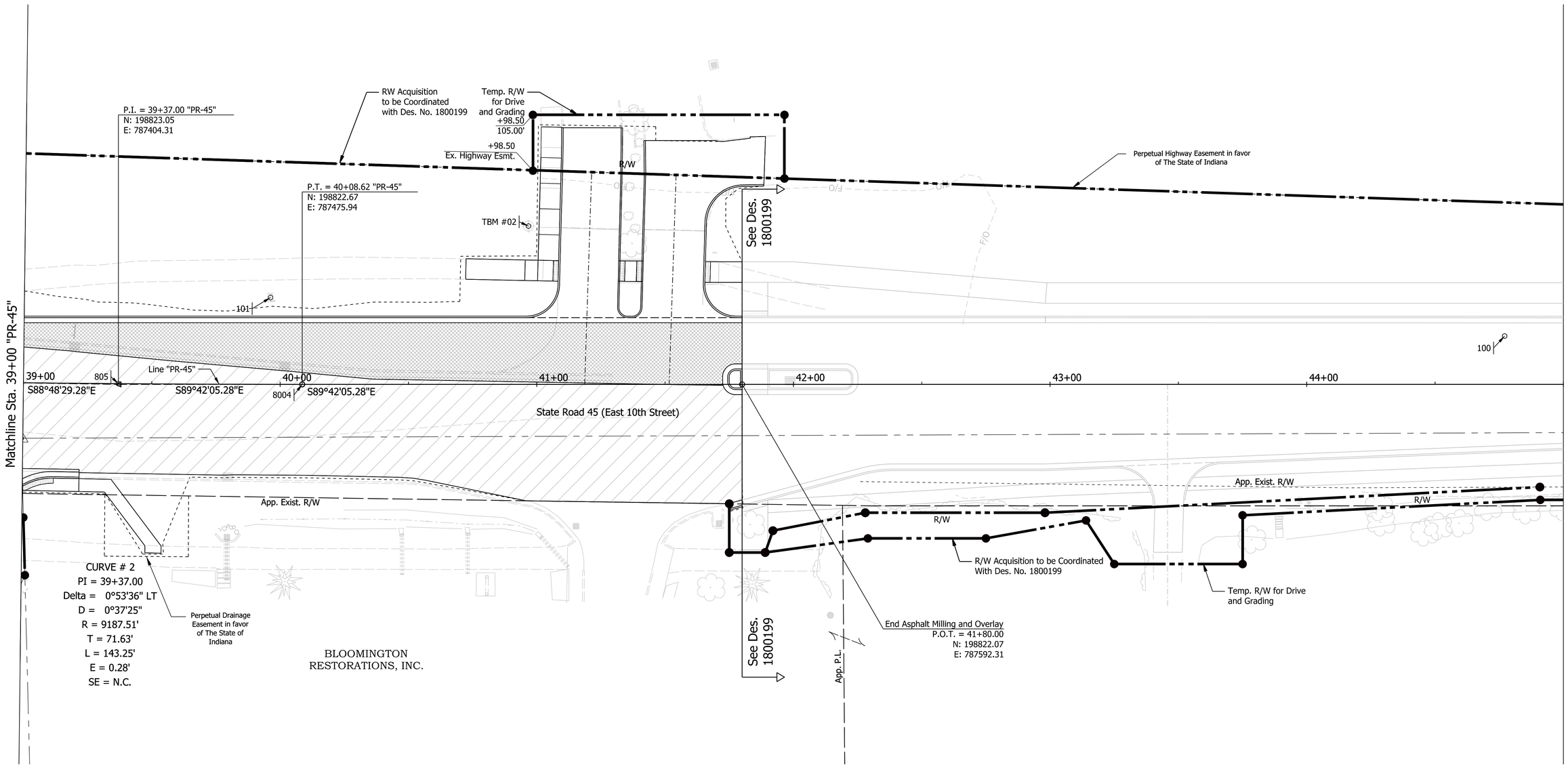

LEGEND

Widening - Full Depth HMA

Resurfacing - Asphalt Milling and Overlay

NOT FOR CONSTRUCTION

RECOMMENDED FOR APPROVAL _____ DESIGN ENGINEER DATE

DESIGNED: MLM	3/20/2023	DRAWN: MLM	3/20/2023
CHECKED: KLT	3/20/2023	CHECKED: KLT	3/20/2023

INDIANA
DEPARTMENT OF TRANSPORTATION

RIGHT OF WAY DETAILS

SCALE	BRIDGE FILE
1"=20'	
	DESIGNATION
	1800086
SURVEY BOOK	SHEETS
	13 of 14
CONTRACT	PROJECT
R-42595	1800086

L:\INDOT\18070904-14\Draw\Sheets\RD_Sht_RW_20_02.dgn

PAVEMENT QUANTITIES AND APPROACH TABLE

LOCATION	DESCRIPTION (APPROACH TYPE OR CLASS)	WIDTH	LENGTH	RADII	DISTANCE BEYOND R/W LINE	SURFACE BEYOND R/W LINE: COMPACTED AGGREGATE BASE	SURFACE BEYOND R/W LINE: HMA	SURFACE BEYOND R/W LINE: CONCRETE	GRADE 1	GRADE 2	EXCAVATION CUT	EXCAVATION FILL	SUBGRADE TREATMENT, TYPE II	HMA FOR APPROACHES, TYPE C (LBS. PER SYD.): 165	HMA FOR APPROACHES, TYPE C (LBS. PER SYD.): 220	HMA FOR APPROACHES, TYPE C (LBS. PER SYD.): 880	PCCP, 6 IN.	PCCP FOR APPROACHES, 9 IN.	HMA MATERIALS (LBS. PER SYD.):	HMA MATERIALS: QC/QA-HMA, 3, 70, SURFACE, 12.5 mm (165)	HMA MATERIALS:	HMA MATERIALS: QC/QA-HMA, 3, 70, INTERMEDIATE, 12.5 mm (275)	HMA MATERIALS: QC/QA-HMA, 3, 70, BASE, 25.0 mm (440)	HMA WEDGE AND LEVEL, TYPE B	COMPACTED AGGREGATE No. 53	GEOGRID, TYPE IB	MILLING, PROFILE	DENSE GRADED SUBBASE	SUBGRADE TREATMENT, TYPE IBL	SIDEWALK, CONCRETE	JOINT ADHESIVE: SURFACE	JOINT ADHESIVE: INTERMEDIATE	LIQUID ASPHALT SEALANT	ASPHALT FOR TACK COAT	CURB, CONCRETE	CURB AND GUTTER, CONCRETE	HMA FOR SIDEWALK	REMARKS
		FT	FT	FT	SYS	SYS	SYS	%	%	%	CYS	SYS	TON	TON	TON	SYS	SYS	SYS		TON		TON	TON	TON	SYS	SYS	SYS	CYS	SYS	SYS	LFT	LFT	LFT	LFT	LFT	LFT	SYS	
SR 45 - Line "PR-45"																																						
Sta. 33+43.71 to Sta. 41+80	Mainline										1207	7					120			165		165	4,029	2	5		509		1,038	56	832	4,861	222	5	685	502	216	
Sta. 36+66.37 Rt.	Class III Drive	32	23.5	20/20					6.00	10.07								106								106		18	120									
Sta, 38+76.94 Rt.	Class III Drive	21	40	20/20					6.00	11.23								116								116		19	138									
Sta. 41+18.65 Lt.	Class III Drive	23	52.75	13/4					8.00	12.50								137								137		23	137									
Sta. 41+51.57 Lt.	Class III Drive	24	52.75	4/13					8.00	12.50								143								143		71	142									
TOTAL											1,207	7					120	502		165		165	4,029	2	5	502	509	131	1,576	56	832	4,861	222	5	685	502		

NOT FOR CONSTRUCTION

RECOMMENDED FOR APPROVAL _____ DESIGN ENGINEER DATE

DESIGNED: MLM 3/20/2023 DRAWN: MLM 3/20/2023

CHECKED: KLT 3/20/2023 CHECKED: KLT 3/20/2023

INDIANA
DEPARTMENT OF TRANSPORTATION

APPROACH TABLE

SCALE	BRIDGE FILE
N.T.S.	
	DESIGNATION
	1800086
SURVEY BOOK	SHEETS
	14 of 14
CONTRACT	PROJECT
R-42595	1800086

L:\INDOT\18070904-14\Draw\Sheets\RD_Sht_Tables.dgn

PROJECT	DESIGNATION
1800199	1800199
CONTRACT	
R-41465	

INDIANA DEPARTMENT OF TRANSPORTATION

MOT PLANS

TRAFFIC DATA	Pete Ellis Dr	Discovery Pkwy	SR 45
A.A.D.T. (2018)	3,100 V.P.D.	1,900 V.P.D.	12,400 V.P.D.
A.A.D.T. (2043)	5,000 V.P.D.	3,000 V.P.D.	16,000 V.P.D.
D.H.V (2043)	390 V.P.H.	590 V.P.H.	1,800 V.P.H.
DIRECTIONAL DISTRIBUTION	50 %	50 %	50 %
TRUCKS	2.0 % A.A.D.T.	3.5 % A.A.D.T.	4.7 % A.A.D.T.
	1.0 % D.H.V.	1.0 % D.H.V.	2.6 % D.H.V.

DESIGN DATA	Pete Ellis Dr	Discovery Pkwy	SR 45
DESIGN SPEED	30 M.P.H.	35 M.P.H.	40 M.P.H.
PROJECT DESIGN CRITERIA	4R (NON-FREEWAY)	4R (NON-FREEWAY)	4R (NON-FREEWAY)
FUNCTIONAL CLASSIFICATION	MINOR COLLECTOR (URBAN)	LOCAL (URBAN)	MINOR ARTERIAL (URBAN)
RURAL/URBAN	URBAN (INTERMEDIATE)	URBAN (INTERMEDIATE)	URBAN (INTERMEDIATE)
TERRAIN	LEVEL	LEVEL	LEVEL
ACCESS CONTROL	NONE	NONE	NONE

ROUTE: SR 45 AT PETE ELLIS DRIVE /DISCOVERY PARKWAY

PROJECT NO. 1800199 P.E.
1800199 R/W
1800199 CONST.

Intersection Improvement project at
SR 45 and Pete Ellis Drive/Discovery Parkway, located in The City of Bloomington, Indiana
Section 35, T-9-N, R-1-W, Bloomington Township, Monroe County, Indiana

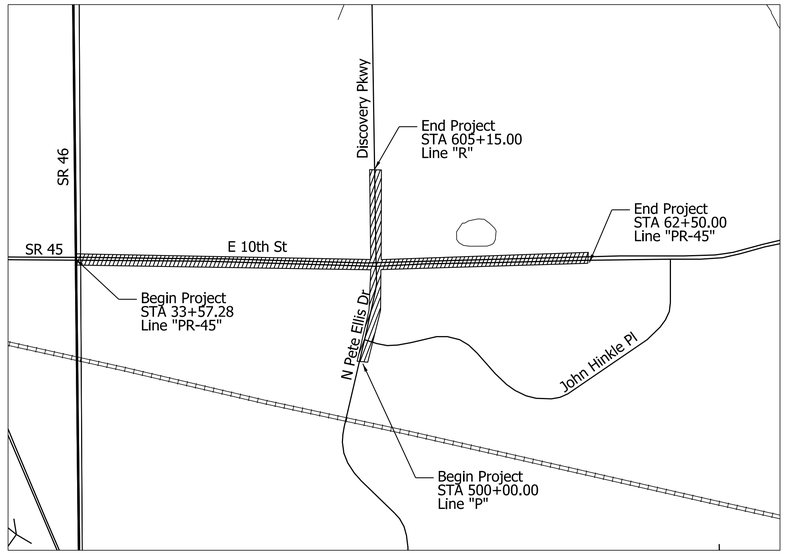

Project Area

Location Map
Monroe County
Scale: 1" = 4000'

PROJECT LOCATION SHOWN BY
MONROE COUNTY

LATITUDE: 39°10'17"N LONGITUDE: 86°29'42"W

GROSS LENGTH: 0.40 MI.
NET LENGTH: 0.40 MI.
MAX. GRADE: 6.2% %

INDIANA DEPARTMENT OF TRANSPORTATION
STANDARD SPECIFICATIONS DATED 2020
TO BE USED WITH THESE PLANS

Copyright CMT, Inc.

CMT
Engineers and Consultants
8790 PURDUE ROAD
INDIANAPOLIS, IN 46268-6128
PHONE: (317) 298-4500

NOT FOR CONSTRUCTION

PLANS PREPARED BY: CRAWFORD, MURPHY & TILLY INC. (317) 298-4500 PHONE NUMBER
CERTIFIED BY: 3/20/2023 DATE
APPROVED FOR LETTING: INDIANA DEPARTMENT OF TRANSPORTATION DATE

BRIDGE FILE
N/A
DESIGNATION
1800199

SURVEY BOOK	SHEETS		
Electronic	1	of	32
CONTRACT	PROJECT		
R-41465	1800199		

PlotSCALE=1:1 PlotOFFSET(X,Y)=0,0 PlotBY:$USER$ PlotDATE:$DATE$ PlotTIME:$TIME$ AM_PM
File: L:\INDOT\18070904-10\Draw\Sheets\MOT_SHT_Title.dgn
Model:$MODEL_NAME$

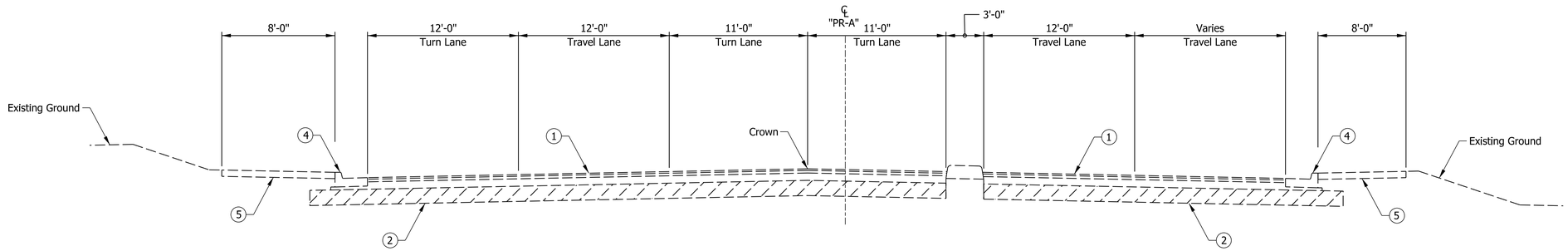

EXISTING TYPICAL SECTION SR 45

STA. 33+48 "PR-A"to STA. 36+22 "PR-A"

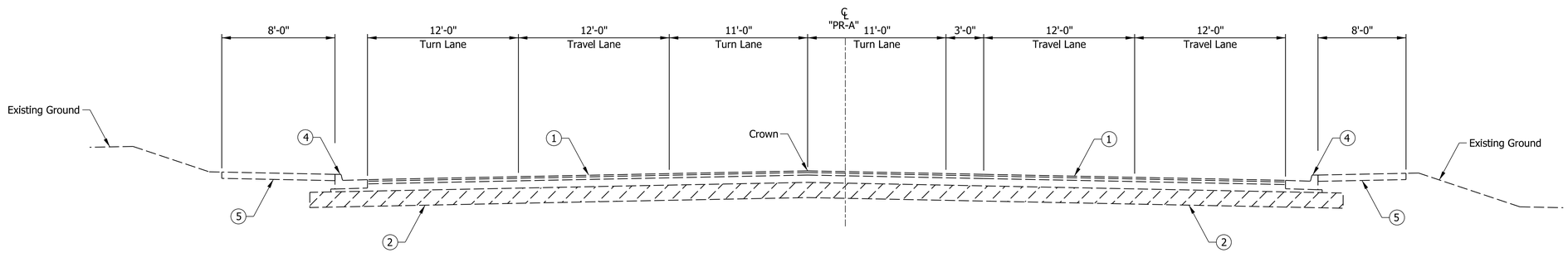

EXISTING TYPICAL SECTION SR 45

STA. 36+22 "PR-A" to STA. 40+38 "PR-A"

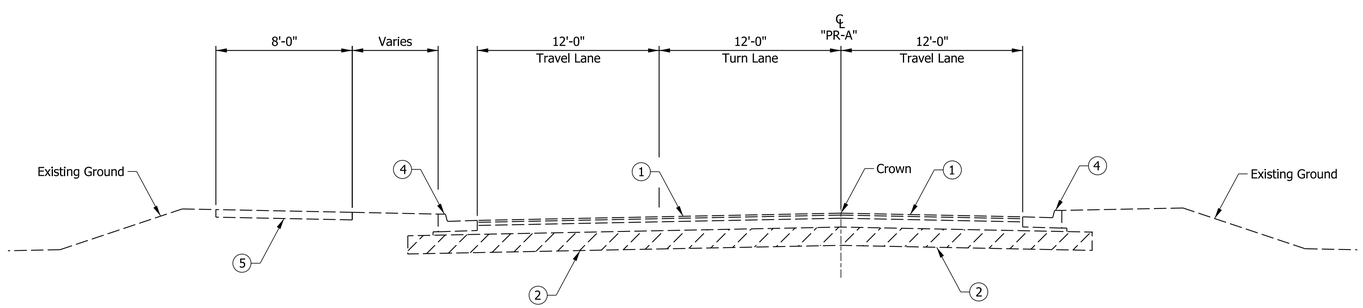

EXISTING TYPICAL SECTION SR 45

STA. 40+38 "PR-A" to STA. 42+98.22 "PR-A"

Legend:

1. Existing Asphalt Pavement
2. Existing Subgrade
4. Existing Curb and Gutter
5. Existing Sidewalk / Multi-Use Path

NOT FOR CONSTRUCTION

RECOMMENDED FOR APPROVAL — DESIGN ENGINEER — 3/20/2023 DATE

DESIGNED: DE_BY DE_DT | DRAWN: DR_BY DR_DT

CHECKED: DEC_BY DEC_DT | CHECKED: DRC_BY DRC_DT

INDIANA
DEPARTMENT OF TRANSPORTATION

EXISTING TYPICAL SECTIONS
SR 45

SCALE	BRIDGE FILE
1"=5'	N/A
	DESIGNATION
	1800199
SURVEY BOOK	SHEETS
Electronic	2 of 42
CONTRACT	PROJECT
R-41465	1800199

L:\INDOT\18070904-14\Draw\Sheets\RD_Sht_Typical Sections.dgn

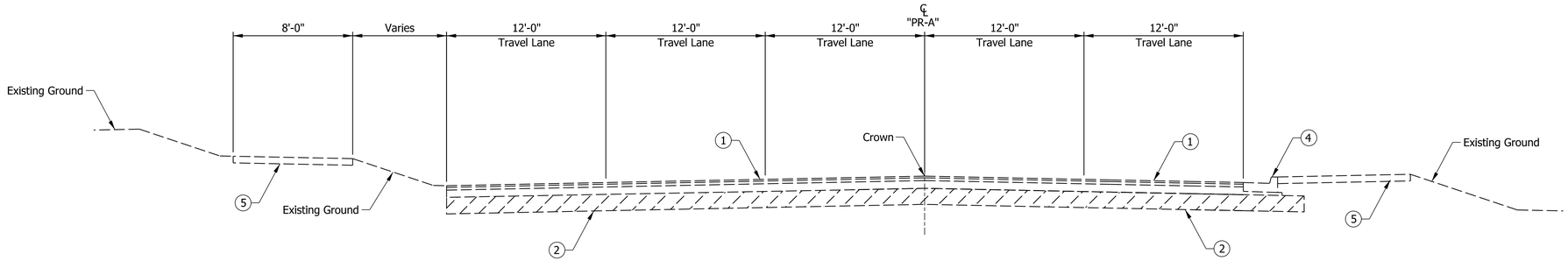

EXISTING TYPICAL SECTION SR 45

STA. 42+98 "PR-A" to STA. 45+44 "PR-A"

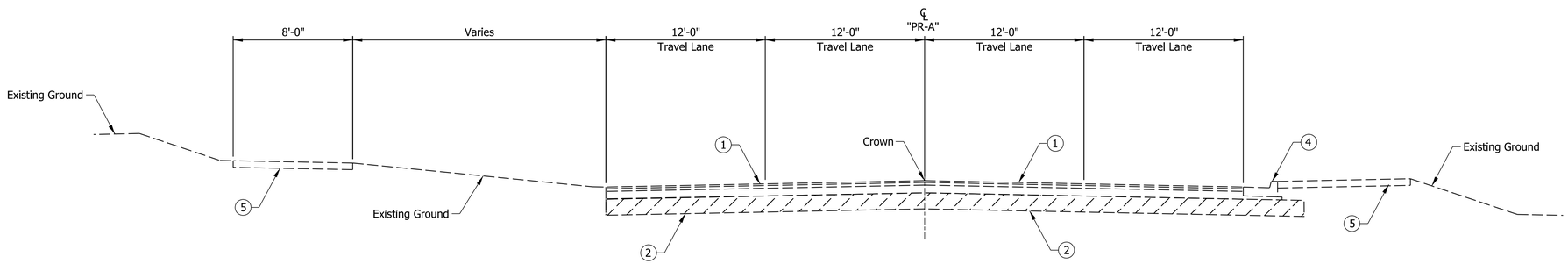

EXISTING TYPICAL SECTION SR 45

STA. 45+44 "PR-A" to STA. 47+39 "PR-A"

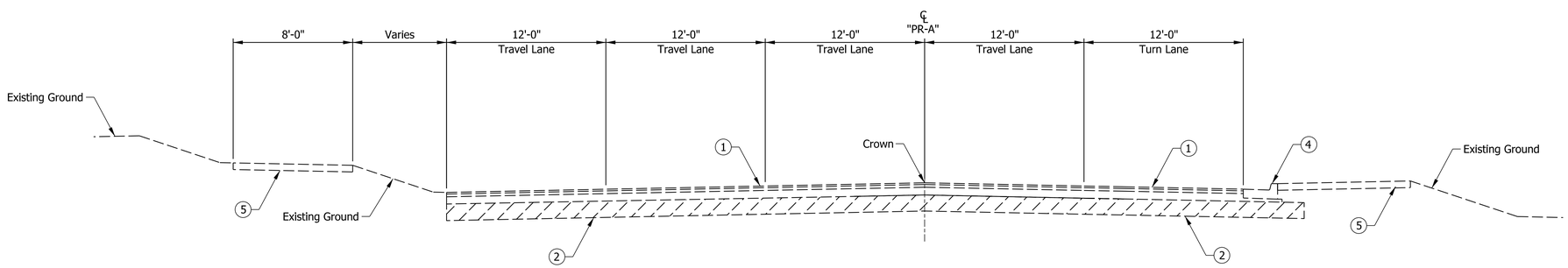

EXISTING TYPICAL SECTION SR 45

STA. 47+39 "PR-A" to STA. 49+77.79 "PR-A"

Legend:

1. Existing Asphalt Pavement
2. Existing Subgrade
4. Existing Curb and Gutter
5. Existing Sidewalk / Multi-Use Path

NOT FOR CONSTRUCTION

RECOMMENDED FOR APPROVAL _____ 3/20/2023
DESIGN ENGINEER DATE

DESIGNED: DE_BY DE_DT DRAWN: DR_BY DR_DT

CHECKED: DEC_BY DEC_DT CHECKED: DRC_BY DRC_DT

INDIANA
DEPARTMENT OF TRANSPORTATION

EXISTING TYPICAL SECTIONS
SR 45

SCALE	BRIDGE FILE
1"=5'	N/A
	DESIGNATION
	1800199
SURVEY BOOK	SHEETS
Electronic	3 of 42
CONTRACT	PROJECT
R-41465	1800199

L:\INDOT\18070904-14\Draw\Sheets\RD_Sht_Typical Sections.dgn

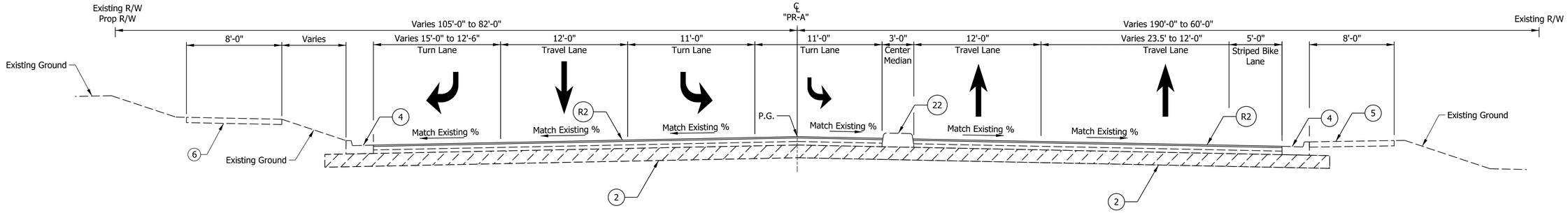

TYPICAL SECTION SR 45

STA. 33+57.28 "PR-45" to STA 35+20.36 "PR-45"

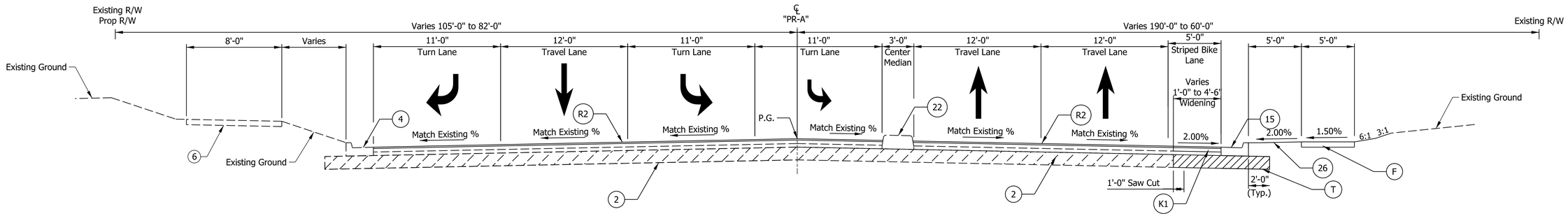

TYPICAL SECTION SR 45

STA. 35+20.36 "PR-45" to STA 36+22.03 "PR-45"

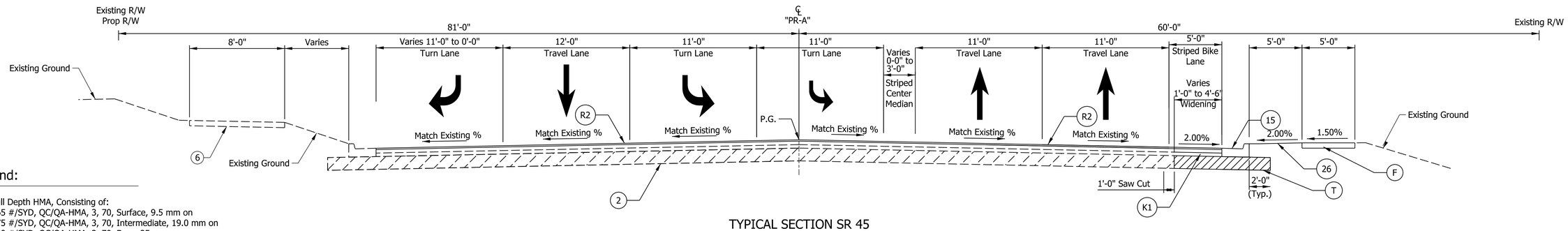

TYPICAL SECTION SR 45

STA. 36+22.03 "PR-45" to STA 37+49.50 "PR-45"

Legend:

- (K) Full Depth HMA, Consisting of:
  165 #/SYD, QC/QA-HMA, 3, 70, Surface, 9.5 mm on
  275 #/SYD, QC/QA-HMA, 3, 70, Intermediate, 19.0 mm on
  440 #/SYD, QC/QA-HMA, 3, 70, Base, 25 mm on
  440 #/SYD, QC/QA-HMA, 3, 70, Base, 25 mm on
- (R2) Asphalt Milling and Overlay, Consisting of:
  Milling, Profile
  165 #/SYD, QC/QA-HMA, 3, 70, Surface, 12.5 mm
- (T) Subgrade Treatment, Type IC
- (R1) HMA Wedge and Level, Type B
  165 #/SYD, QC/QA-HMA, 3, 70, Surface, 9.5 mm on
  275 #/SYD, QC/QA-HMA, 3, 70, Intermediate, 19.0 mm
- (F) Sidewalk, Concrete
- (D1) HMA for Sidewalks, Consisting of:
  165 #/SYD, HMA Surface Type B on
  275 #/SYD, HMA Intermediate Type B on
  6 in. Compacted Aggregate #53, Base
- (15) Curb and Gutter, Concrete
- (16) Center Curb, A Concrete
- (17) Curb and Gutter, Modified
- (K1) Widening with HMA Type C, Consisting of:
  165 #/SYD, QC/QA-HMA, 3, 70, Surface, 9.5 mm on
  275 #/SYD, HMA Intermediate, Type C, 19.0 mm on
  880 #/SYD, HMA Base, Typce C
- (26) Seed Mixture, U
  Fertilizer
  Mulching Material
  Plant Growth Layer
- (2) Existing Subgrade
- (4) Existing Curb and Gutter
- (5) Existing Sidewalk
- (6) Existing Multi-Use Path

Note to Reviewer
Pavement Design to be determined by INDOT and will be provided in a future submittal.

NOT FOR CONSTRUCTION

RECOMMENDED FOR APPROVAL _____ 3/20/2023
DESIGN ENGINEER DATE

DESIGNED: DE_BY DE_DT DRAWN: DR_BY DR_DT
CHECKED: DEC_BY DEC_DT CHECKED: DRC_BY DRC_DT

INDIANA
DEPARTMENT OF TRANSPORTATION

TYPICAL SECTIONS
SR 45

SCALE	BRIDGE FILE
1"=5'	N/A
	DESIGNATION
	1800199
SURVEY BOOK	SHEETS
Electronic	4 of 42
CONTRACT	PROJECT
R-41465	1800199

L:\INDOT\18070904-14\Draw\Sheets\RD_Sht_Typical Sections.dgn

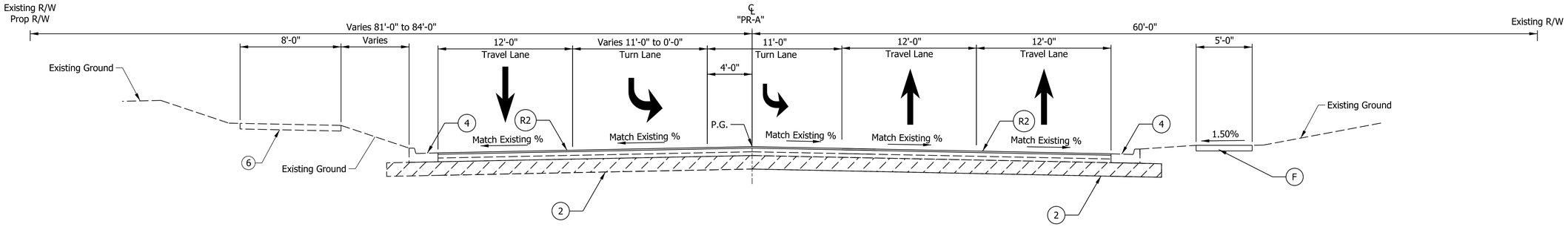

TYPICAL SECTION SR 45

STA. 37+49.50 "PR-45" to STA 38+09.33 "PR-45"

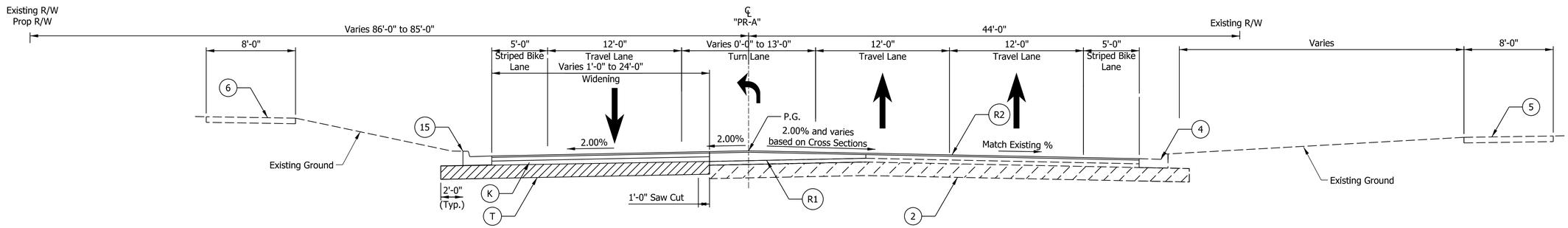

TYPICAL SECTION SR 45

STA. 38+09.33 "PR-45" to STA 41+72.42 "PR-45"

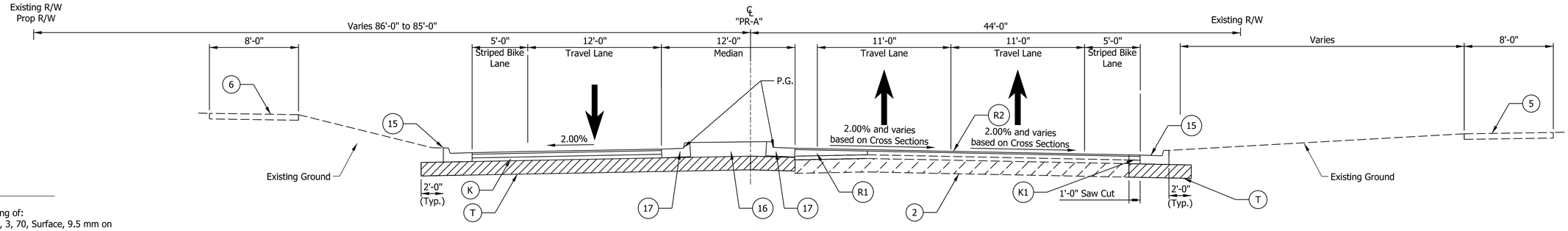

TYPICAL SECTION SR 45

STA. 41+72.42 "PR-45" to 41+80.00 "PR-45"

Legend:

- (K) Full Depth HMA, Consisting of:
  165 #/SYD, QC/QA-HMA, 3, 70, Surface, 9.5 mm on
  275 #/SYD, QC/QA-HMA, 3, 70, Intermediate, 19.0 mm on
  440 #/SYD, QC/QA-HMA, 3, 70, Base, 25 mm on
  440 #/SYD, QC/QA-HMA, 3, 70, Base, 25 mm on
- (R2) Asphalt Milling and Overlay, Consisting of:
  Milling, Profile
  165 #/SYD, QC/QA-HMA, 3, 70, Surface, 12.5 mm
- (T) Subgrade Treatment, Type IC
- (R1) HMA Wedge and Level, Type B
  165 #/SYD, QC/QA-HMA, 3, 70, Surface, 9.5 mm on
  275 #/SYD, QC/QA-HMA, 3, 70, Intermediate, 19.0 mm
- (F) Sidewalk, Concrete
- (D1) HMA for Sidewalks, Consisting of:
  165 #/SYD, HMA Surface Type B on
  275 #/SYD, HMA Intermediate Type B on
  6 in. Compacted Aggregate #53, Base
- (15) Curb and Gutter, Concrete
- (16) Center Curb, A Concrete
- (17) Curb and Gutter, Modified
- (K1) Widening with HMA Type C, Consisting of:
  165 #/SYD, QC/QA-HMA, 3, 70, Surface, 9.5 mm on
  275 #/SYD, HMA Intermediate, Type C, 19.0 mm on
  880 #/SYD, HMA Base, Typce C
- (26) Seed Mixture, U
  Fertilizer
  Mulching Material
  Plant Growth Layer
- (2) Existing Subgrade
- (4) Existing Curb and Gutter
- (5) Existing Sidewalk
- (6) Existing Multi-Use Path

Note to Reviewer
Pavement Design to be determined by INDOT and will be provided in a future submittal.

NOT FOR CONSTRUCTION

RECOMMENDED FOR APPROVAL _____ 3/20/2023
DESIGN ENGINEER DATE

DESIGNED: DE_BY DE_DT DRAWN: DR_BY DR_DT
CHECKED: DEC_BY DEC_DT CHECKED: DRC_BY DRC_DT

INDIANA
DEPARTMENT OF TRANSPORTATION

TYPICAL SECTIONS
SR 45

SCALE	BRIDGE FILE
1"=5'	N/A
	DESIGNATION
	1800199
SURVEY BOOK	SHEETS
Electronic	5 of 42
CONTRACT	PROJECT
R-41465	1800199

L:\INDOT\18070904-14\Draw\Sheets\RD_Sht_Typical Sections.dgn

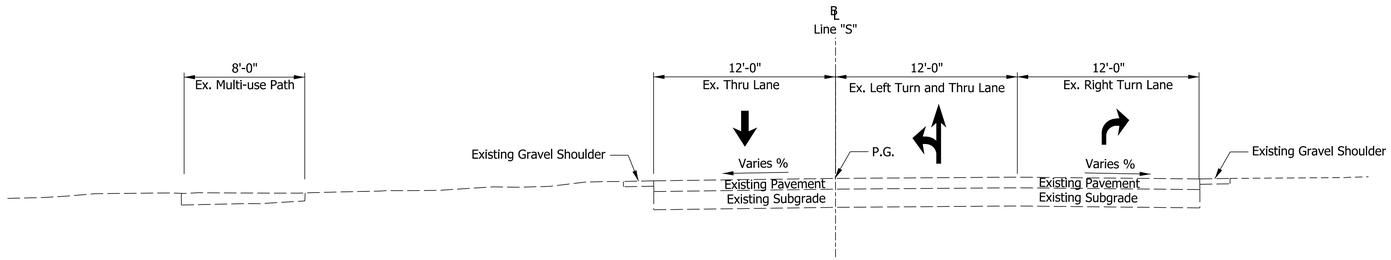

SR 45 TYPICAL SECTION

West of Pete Ellis Dr./Discovery Parkway

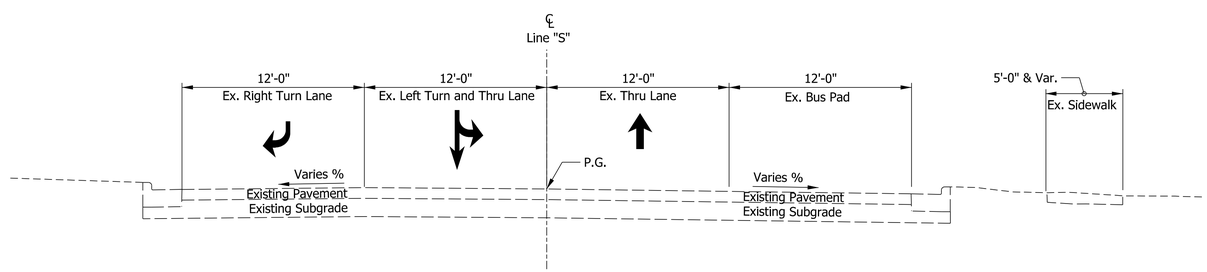

SR 45 TYPICAL SECTION

East of Pete Ellis Dr./Discovery Parkway

NOT FOR CONSTRUCTION

RECOMMENDED FOR APPROVAL — DESIGN ENGINEER — 3/20/2023 DATE

DESIGNED: MM 3/20/2023 | DRAWN: MM 3/20/2023

CHECKED: KT 3/20/2023 | CHECKED: KT 3/20/2023

INDIANA DEPARTMENT OF TRANSPORTATION

EXISTING TYPICAL SECTIONS
LINE "S"

SCALE	BRIDGE FILE
5.0000 ' / in.	N/A
	DESIGNATION
	1800199
SURVEY BOOK	SHEETS
Electronic	6 of 32
CONTRACT	PROJECT
R-41465	1800199

PlotSet: PLOT_DATE$ PLOT_TIME$ AM_PM

L:\INDOT\18070904-10\Draw\Sheets\Sht_TypSec_Exist.dgn

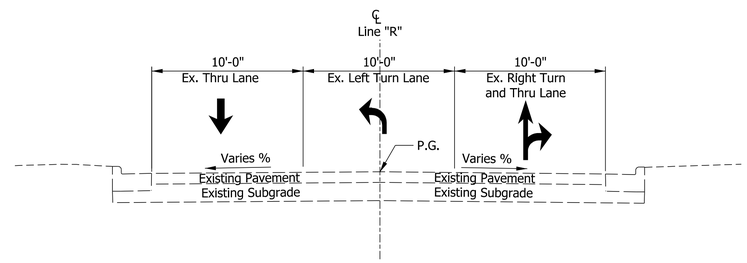

DISCOVERY PARKWAY TYPICAL SECTION

North of SR 45

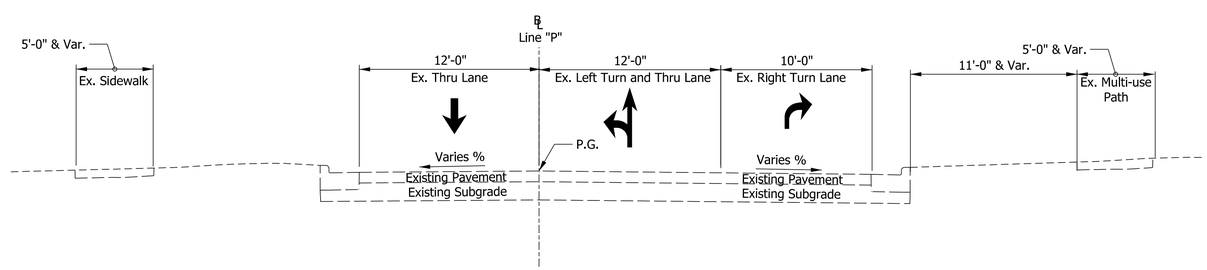

PETE ELLIS DR TYPICAL SECTION

South of SR 45

NOT FOR CONSTRUCTION

RECOMMENDED FOR APPROVAL — DESIGN ENGINEER — DATE 3/20/2023

DESIGNED: MM 3/20/2023 | DRAWN: MM 3/20/2023

CHECKED: KT 3/20/2023 | CHECKED: KT 3/20/2023

INDIANA DEPARTMENT OF TRANSPORTATION

EXISTING TYPICAL SECTIONS
LINE "R" AND LINE "P"

SCALE	BRIDGE FILE
5.0000 ' / in.	N/A
	DESIGNATION
	1800199
SURVEY BOOK	SHEETS
Electronic	7 of 32
CONTRACT	PROJECT
R-41465	1800199

PlotSet: PLOT_DATE$ PLOT_TIME$ AM_PM

L:\INDOT\18070904-10\Draw\Sheets\Sht_TypSec_Exist.dgn

Note to Reviewer
Pavement Design to be determined by INDOT after Stage 2 submittal.

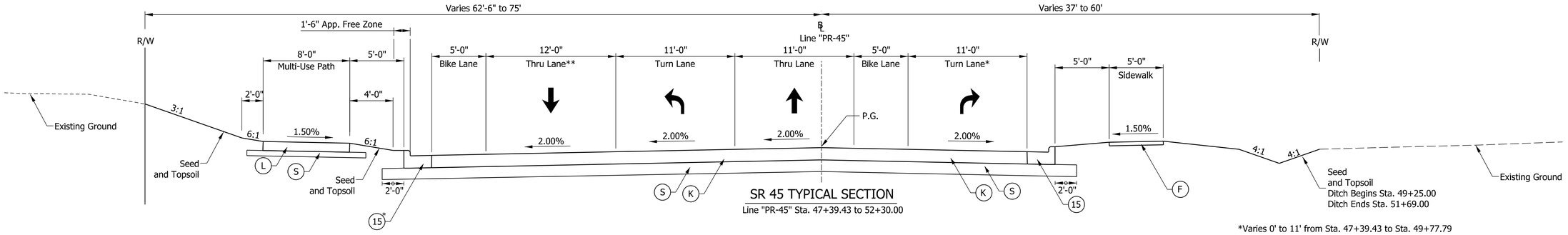

*Varies 0' to 11' from Sta. 47+39.43 to Sta. 49+77.79

SR 45 TYPICAL SECTION

Line "PR-45" Sta. 47+39.43 to 52+30.00

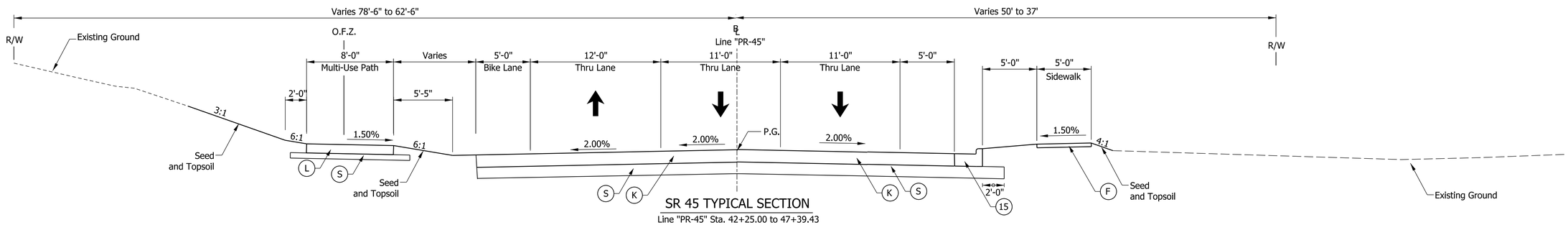

SR 45 TYPICAL SECTION

Line "PR-45" Sta. 42+25.00 to 47+39.43

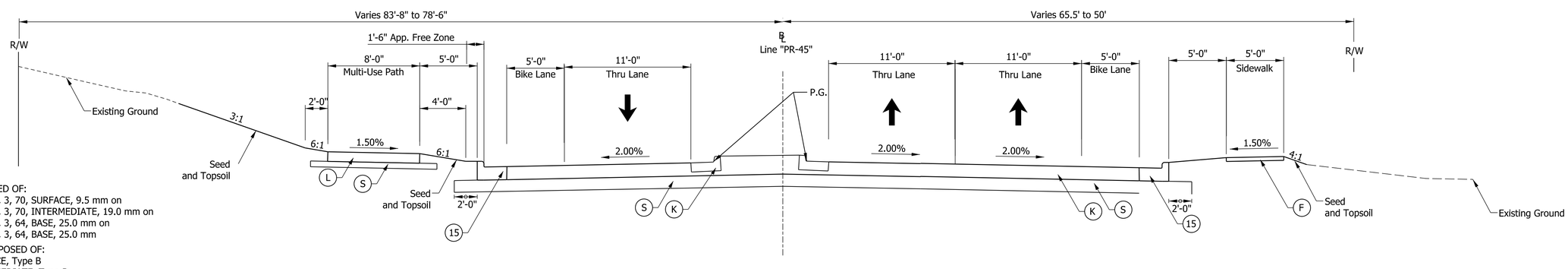

SR 45 TYPICAL SECTION

Line "PR-45" Sta. 41+80.00 to 42+25.00

LEGEND

- (K) FULL DEPTH HMA COMPOSED OF:
  165 lb/syd QC/QA - HMA, 3, 70, SURFACE, 9.5 mm on
  270 lb/syd QC/QA - HMA, 3, 70, INTERMEDIATE, 19.0 mm on
  440 lb/syd QC/QA - HMA, 3, 64, BASE, 25.0 mm on
  440 lb/syd QC/QA - HMA, 3, 64, BASE, 25.0 mm
- (L) MULTI-USE HMA PATH COMPOSED OF:
  140 lb/syd - HMA SURFACE, Type B
  220 lb/syd - HMA INTERMEDIATE, Type B
  6" Compacted Aggregate, No. 53, Base
- (R) MILL AND OVERLAY, 1.5" COMPOSED OF:
  165 lb/syd QC/QA - HMA, 3, 70, SURFACE, 9.5 mm
- (R1) HMA WEDGE AND LEVEL COMPOSED OF:
  165 lb/syd QC/QA - HMA, 3, 70, SURFACE, 9.5 mm on
  270 lb/syd QC/QA - HMA, 3, 70, INTERMEDIATE, 19.0 mm
- (S) SUBGRADE TREATMENT, TYPE IBC
- (15) CURB AND GUTTER, CONCRETE
- (F) SIDEWALK, CONCRETE

NOT FOR CONSTRUCTION

RECOMMENDED FOR APPROVAL	DESIGN ENGINEER	3/20/2023 DATE	
DESIGNED: MM 3/20/2023	DRAWN: MM 3/20/2023		
CHECKED: KT 3/20/2023	CHECKED: KT 3/20/2023		

INDIANA DEPARTMENT OF TRANSPORTATION

PROPOSED TYPICAL SECTIONS
LINE "PR-45"

SCALE	BRIDGE FILE
5.0000 ' / in.	N/A
	DESIGNATION
	1800199
SURVEY BOOK	SHEETS
Electronic	8 of 32
CONTRACT	PROJECT
R-41465	1800199

PLOTSCALE=1 DATE=2023/03/20 TIME=AM_PM

L:\INDOT\18070904-10\Draw\Sheets\Sht_TypSec_Prop.dgn

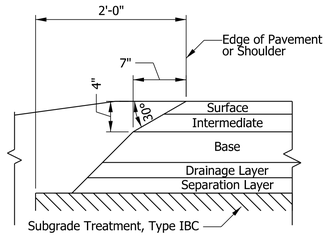

SAFETY EDGE ON HMA PAVEMENT

N.T.S.

Note to Reviewer
Pavement Design to be determined by INDOT after Stage 2 submittal.

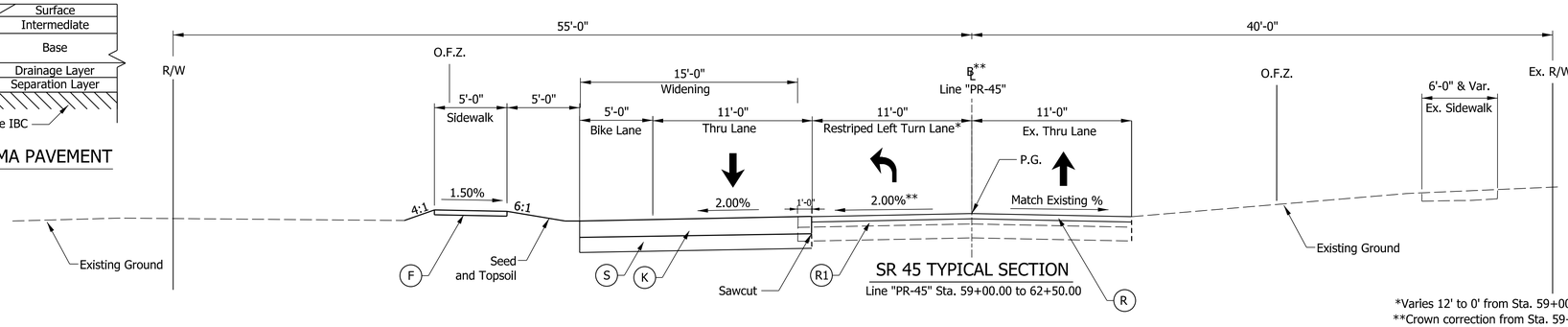

SR 45 TYPICAL SECTION

Line "PR-45" Sta. 59+00.00 to 62+50.00

*Varies 12' to 0' from Sta. 59+00.00 to Sta. 62+50.00
**Crown correction from Sta. 59+00.00 to Sta. 62+50.00
Note: Crown Correcction wil be detailed for contractor in future submission.

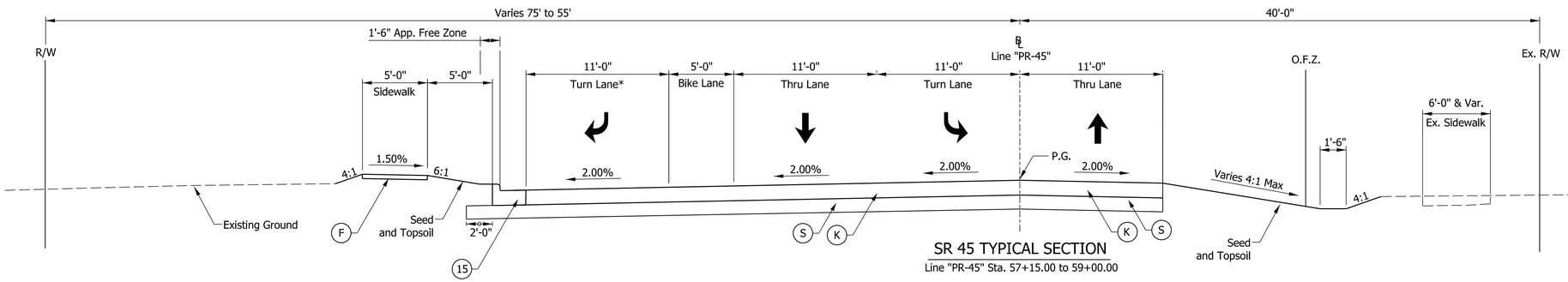

SR 45 TYPICAL SECTION

Line "PR-45" Sta. 57+15.00 to 59+00.00

*Varies 11' to 0' from Sta. 57+44.36 to Sta. 57+87.81

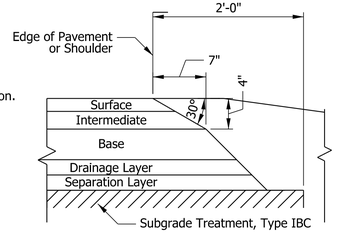

SAFETY EDGE ON HMA PAVEMENT

N.T.S.

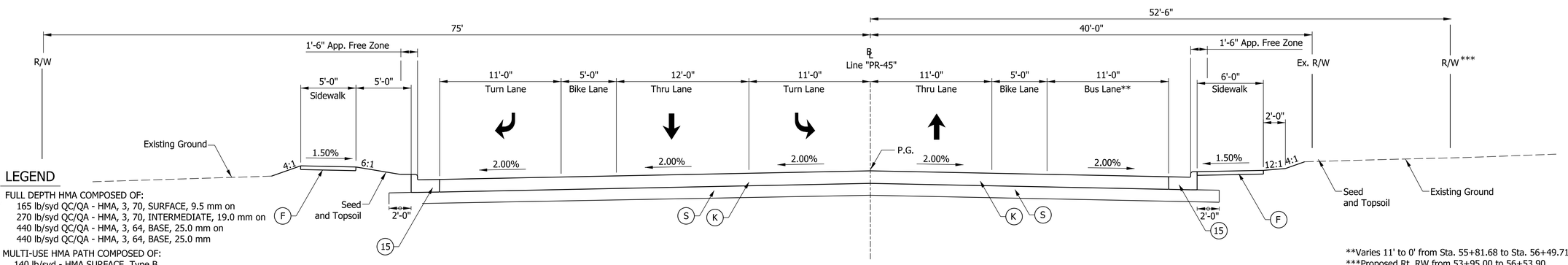

SR 45 TYPICAL SECTION

Line "PR-45" Sta. 52+30.00 to 57+15.00

**Varies 11' to 0' from Sta. 55+81.68 to Sta. 56+49.71
***Proposed Rt. RW from 53+95.00 to 56+53.90

LEGEND

- (K) FULL DEPTH HMA COMPOSED OF:
  165 lb/syd QC/QA - HMA, 3, 70, SURFACE, 9.5 mm on
  270 lb/syd QC/QA - HMA, 3, 70, INTERMEDIATE, 19.0 mm on
  440 lb/syd QC/QA - HMA, 3, 64, BASE, 25.0 mm on
  440 lb/syd QC/QA - HMA, 3, 64, BASE, 25.0 mm
- (L) MULTI-USE HMA PATH COMPOSED OF:
  140 lb/syd - HMA SURFACE, Type B
  220 lb/syd - HMA INTERMEDIATE, Type B
  6" Compacted Aggregate, No. 53, Base
- (R) MILL AND OVERLAY, 1.5" COMPOSED OF:
  165 lb/syd QC/QA - HMA, 3, 70, SURFACE, 9.5 mm
- (R1) HMA WEDGE AND LEVEL COMPOSED OF:
  165 lb/syd QC/QA - HMA, 3, 70, SURFACE, 9.5 mm on
  270 lb/syd QC/QA - HMA, 3, 70, INTERMEDIATE, 19.0 mm
- (S) SUBGRADE TREATMENT, TYPE IBC
- (15) CURB AND GUTTER, CONCRETE
- (F) SIDEWALK, CONCRETE

NOT FOR CONSTRUCTION

RECOMMENDED FOR APPROVAL — DESIGN ENGINEER — 3/20/2023 DATE

DESIGNED: MM 3/20/2023 | DRAWN: MM 3/20/2023

CHECKED: KT 3/20/2023 | CHECKED: KT 3/20/2023

INDIANA DEPARTMENT OF TRANSPORTATION

PROPOSED TYPICAL SECTIONS
LINE "PR-45"

SCALE	BRIDGE FILE
5.0000 ' / in.	N/A
	DESIGNATION
	1800199
SURVEY BOOK	SHEETS
Electronic	9 of 32
CONTRACT	PROJECT
R-41465	1800199

PLOTTED: 3/20/2023 TIME: AM_PM

L:\INDOT\18070904-10\Draw\Sheets\Sht_TypSec_Prop.dgn

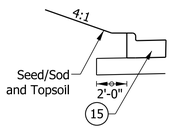

CUT SECTION

Line "R" Sta. 600+89.36 to 602+50

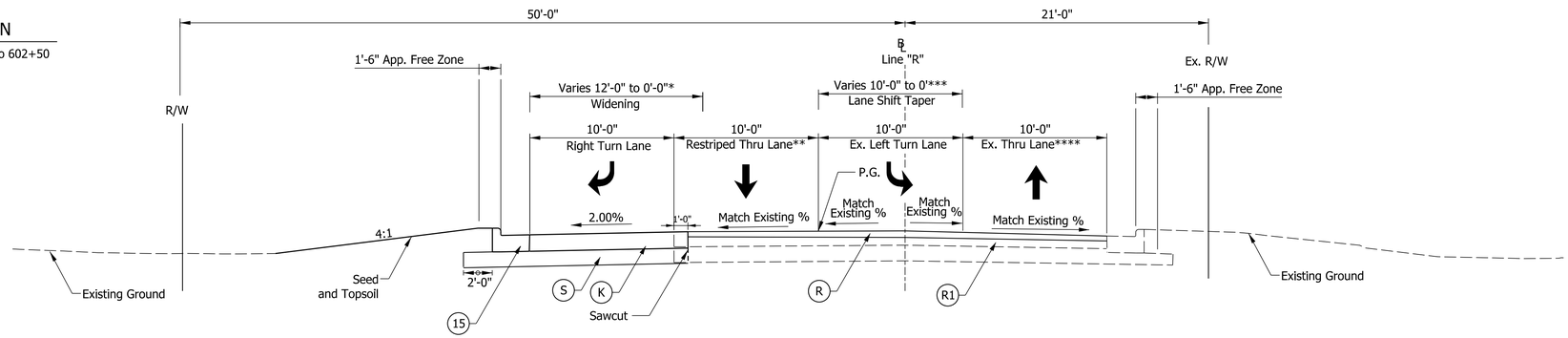

DISCOVERY PARKWAY TYPICAL SECTION

Line "R" Sta. 600+89.36 to 605+15.00

*Varies 12'-0" to 0'-0" from Sta. 600+89.36 to 604+57.62
**Thru Lane widens 10'-0" to 14'-0" to meet Existing Thru Lane from Sta. 604+14.97 to 605+14.97
***Varies 10'-0" to 0'-0" from Sta. 603+14.97 to 604+14.97
****Thru Lane widens 10'-0" to 14'-0" from Sta. 603+14.97 to 605+14.97

Note to Reviewer

Pavement Design to be determined by INDOT after Stage 2 submittal.

After receiving the survey information, the lane width on Discovery Parkway has been revised from 11 feet as suggested in the Engineer's Report to 10 feet due to the width of the existing pavement.

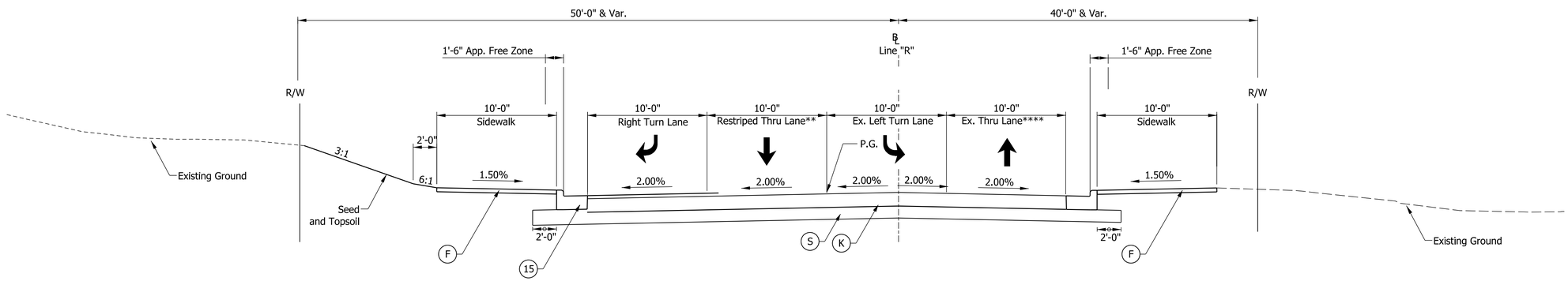

DISCOVERY PARKWAY TYPICAL SECTION

Line "R" Sta. 600+65.64 to 600+89.36

LEGEND

(K) FULL DEPTH HMA COMPOSED OF:
165 lb/syd QC/QA - HMA, 3, 70, SURFACE, 9.5 mm on
270 lb/syd QC/QA - HMA, 3, 70, INTERMEDIATE, 19.0 mm on
440 lb/syd QC/QA - HMA, 3, 64, BASE, 25.0 mm on
440 lb/syd QC/QA - HMA, 3, 64, BASE, 25.0 mm

(L) MULTI-USE HMA PATH COMPOSED OF:
140 lb/syd - HMA SURFACE, Type B
220 lb/syd - HMA INTERMEDIATE, Type B
6" Compacted Aggregate, No. 53, Base

(R) MILL AND OVERLAY, 1.5" COMPOSED OF:
165 lb/syd QC/QA - HMA, 3, 70, SURFACE, 9.5 mm

(R1) HMA WEDGE AND LEVEL COMPOSED OF:
165 lb/syd QC/QA - HMA, 3, 70, SURFACE, 9.5 mm on
270 lb/syd QC/QA - HMA, 3, 70, INTERMEDIATE, 19.0 mm

(S) SUBGRADE TREATMENT, TYPE IBC

(15) CURB AND GUTTER, CONCRETE

(F) SIDEWALK, CONCRETE

NOT FOR CONSTRUCTION

RECOMMENDED FOR APPROVAL — DESIGN ENGINEER — 3/20/2023 DATE

DESIGNED: MM 3/20/2023 | DRAWN: MM 3/20/2023

CHECKED: KT 3/20/2023 | CHECKED: KT 3/20/2023

INDIANA DEPARTMENT OF TRANSPORTATION

PROPOSED TYPICAL SECTIONS
LINE "R"

SCALE	BRIDGE FILE
5.0000 ' / in.	N/A
	DESIGNATION
	1800199

SURVEY BOOK	SHEETS		
Electronic	10	of	32
CONTRACT	PROJECT		
R-41465	1800199		

Plot$PLOT_DATE$ $PLOT_TIME$ AM_PM

L:\INDOT\18070904-10\Draw\Sheets\Sht_TypSec_Prop.dgn

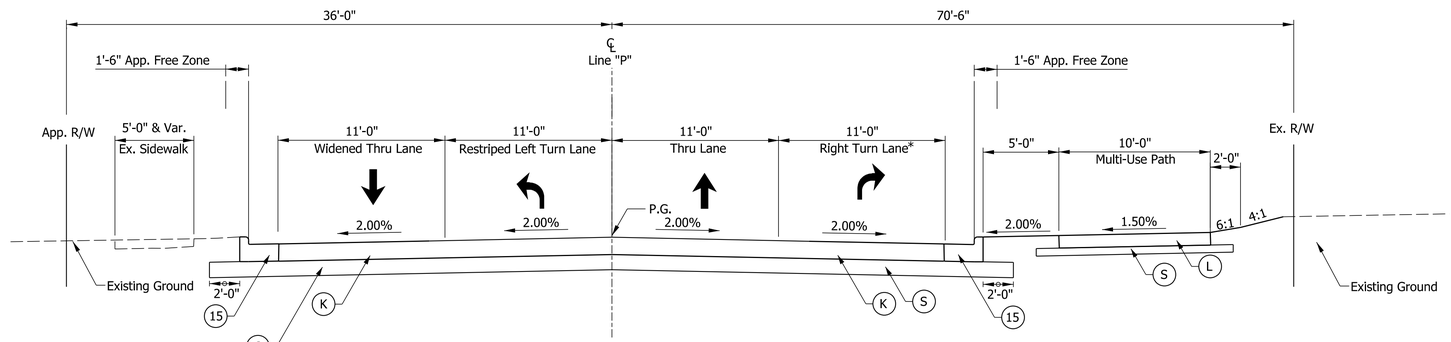

PETE ELLIS DR TYPICAL SECTION

Line "P" Sta. 503+81.55 to 504+84.00

*Lengthen Ex. Right Turn Lane from Sta. 503+81.55 to 504+84.00

Note to Reviewer

Pavement Design to be determined by INDOT after Stage 2 submittal.

After receiving the survey information, the lane width on Discovery Parkway has been revised from 11 feet as suggested in the Engineer's Report to 10 feet due to the width of the existing pavement.

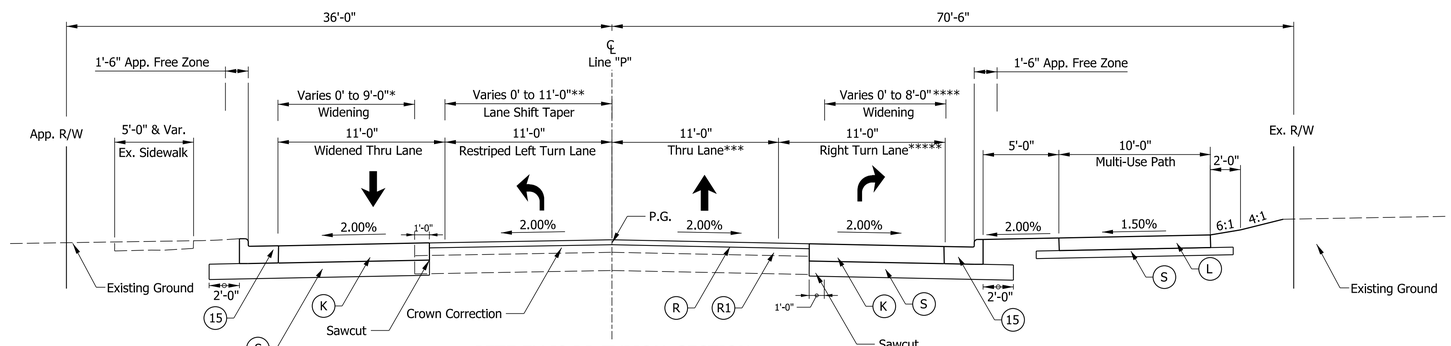

PETE ELLIS DR TYPICAL SECTION

Line "P" Sta. 500+00.00 to 503+81.55

*Varies 0'-0" to 9'-0" from Sta. 500+00.00 to 503+81.55
**Varies 0'-0" to 11'-0" from Sta. 500+64.50 to 501+64.50
***Existing Thru Lane narrows from 12'-0" to 11'-0" from Sta. 500+66.87 to 502+36.82
****Varies 0'-0" to 8'-0" from Sta. 500+66.60 to 503+81.55
*****Lengthen Ex. Right Turn Lane from Sta. 502+36.82 to 503+81.55

LEGEND

(K) FULL DEPTH HMA COMPOSED OF:
165 lb/syd QC/QA - HMA, 3, 70, SURFACE, 9.5 mm on
270 lb/syd QC/QA - HMA, 3, 70, INTERMEDIATE, 19.0 mm on
440 lb/syd QC/QA - HMA, 3, 64, BASE, 25.0 mm on
440 lb/syd QC/QA - HMA, 3, 64, BASE, 25.0 mm

(L) MULTI-USE HMA PATH COMPOSED OF:
140 lb/syd - HMA SURFACE, Type B
220 lb/syd - HMA INTERMEDIATE, Type B
6" Compacted Aggregate, No. 53, Base

(R) MILL AND OVERLAY, 1.5" COMPOSED OF:
165 lb/syd QC/QA - HMA, 3, 70, SURFACE, 9.5 mm

(R1) HMA WEDGE AND LEVEL COMPOSED OF:
165 lb/syd QC/QA - HMA, 3, 70, SURFACE, 9.5 mm on
270 lb/syd QC/QA - HMA, 3, 70, INTERMEDIATE, 19.0 mm

(S) SUBGRADE TREATMENT, TYPE IBC

(15) CURB AND GUTTER, CONCRETE

(F) SIDEWALK, CONCRETE

NOT FOR CONSTRUCTION

RECOMMENDED FOR APPROVAL — DESIGN ENGINEER — DATE 3/20/2023

DESIGNED: MM 3/20/2023 | DRAWN: MM 3/20/2023

CHECKED: KT 3/20/2023 | CHECKED: KT 3/20/2023

INDIANA DEPARTMENT OF TRANSPORTATION

PROPOSED TYPICAL SECTIONS
LINE "P"

SCALE	BRIDGE FILE
5.0000 ' / in.	N/A
	DESIGNATION
	1800199

SURVEY BOOK	SHEETS		
Electronic	11	of	32
CONTRACT	PROJECT		
R-41465	1800199		

PlotSPLOT_DATE$ $PLOT_TIME$ AM_PM

L:\INDOT\18070904-10\Draw\Sheets\Sht_TypSec_Prop.dgn

MAINTENANCE OF TRAFFIC GENERAL NOTES

1.Fire Department shall have access to SR 45 at all times.

2.Fire Department shall have 48 hours notice if hydrants will be out of service or otherwise inaccessible.

3.Postmaster is Mindy E. Pemberton. Postmaster requires a two week notice of MOT changes and initial construction start. Post Office entrances shall remain open at all times. Additional information to be provided after further coordination with Postmaster.

4.Access to all drives shall be maintained during construction unless otherwise noted in the plans.
- a. There are 2 entrances to Scholar's Quad Collegiate Apartments on SR 45. The East entrance may be closed entirely in order to complete the entrance reconstruction. Contractor shall keep West entrance open at all times.
- b. All drives shall be constructed 1/2 at a time.

5.Contractor shall provide two weeks notice of Maintenance of Traffic changes and closures to Emergency Services, City of Bloomington, Bloomington Transit, USPS and IU Facilities.

6.Contractor shall coordinate access of City Bus Service and bus routes with Bloomington Transit. Contractor shall remove bus stop signage for any bus stops that are closed. Contractor shall provide 3 weeks notice to Bloomington Transit (Zac Huneck, zhuneck@bloomingtontransit.com) of changes to bus stops.

7.Contractor shall coordinate access of School Bus Service and bus routes with Monroe County Community School Corporation (MCCSC) Transportation Office. Contact is Nathan Oliver, Director of Transportation, 812-330-7719 ext-53410, noliver@mccsc.edu
- a. MCCSC has 15 routes that run through the corridor 4 times a day. MCCSC runs two-tier bus routes, meaning there is a High School / Middle School (HS/MS) run on one tier and then Elementary routes on the second tier. MCCSC also has 6 Special Needs routes that run through this corridor. MCCSC transports 16 HS/MS students on the first tier and 28 Elementary students on the second tier each morning on these special needs routes. MCCSC has 8 General Education routes that also travel through this corridor. MCCSC transports 306 HS/MS students on the first tier and 293 Elementary routes on the second tier. The first and second tiers run through this corridor between 6:00am and 9:00am and all HS/MS students have to be at school by 7:45am in order to receive breakfast and All Elementary students have to be at school by 8:45am in order to receive breakfast each day. Then in the afternoon MCCSC runs the two tiers again starting at 3:00pm and finishing around 5:00pm.
- b. Contactor shall provide MCCSC at least 3 weeks notice of MOT initiation and changes in MOT so MCCSC has time to plan accordingly.
- c. Bus routes shall remain operational during construction.

8.Contractor shall maintain access for pedestrians at all times.

MAINTENANCE OF TRAFFIC SEQUENCE OF OPERATION

STAGE 0A

1. Add temporary widening on south side of SR 45 as indicated.

2. Construct temporary path pavement and curb ramps for pedestrian movement during construction.

3. Construction shall be completed during night hours with the use of Traffic Control Flagger Operations per INDOT Std. E801-TCFO.

STAGE 0B

1. Construct proposed Multi-Use path along the north side of SR 45.

STAGE 1:

1. Left turns from SR 45 shall be restricted within the project limits.

2. Construct widening on north side of SR 45. From Sta. 58+00 to Sta. 62+50 construct widening to edge of pavement. Curb and gutter and multi-use path (Sta. 59+00 to 60+00) shall be be constructed in Stage 3A.

3. Close Discovery Parkway with detour.

4. Construct widening on west side of Discovery Parkway.

5. Construct new radii at SR 45 and Discovery Parkway.

6. Construct temporary pavement needed for Stage 2.

7. Signal configuration at the intersection of SR 45 / Pete Ellis Drive and Discovery Parkway shall be updated to accomodate the change in traffic lanes. Signal heads shall shifted to align with traffic lanes of SR 45. Rewiring needed to maintain signals will be paid for under Maintaining Traffic. Unused signal heads shall be bagged.

8. Improvements at Indiana University Technology Park East shall need to be completed during night time hours. Entrance shall remain open during the day time hours.

STAGE 2:

1. Left turns from SR 45 shall be restricted within the project limits.

2. Construct EB right turn lane extension on south side of SR 45.

3. Construct new curb and gutter on south side of SR 45.

4. Maintain temporary pavement constructed in Stage 1A from Sta. 58+00 to Sta. 62+50 for use in Stage 3A.

5. Close Pete Ellis Drive with detour.

6. Construct widening on west side of Pete Ellis Drive.

7. Construct new radii at SR 45 and Pete Ellis Drive.

8. Signal configuration at the intersection of SR 45 / Pete Ellis Drive and Discovery Parkway shall be updated to accomodate the change in traffic lanes. Signal heads shall shifted to align with traffic lanes of SR 45. Rewiring needed to maintain signals will be paid for under Maintaining Traffic. Unused signal heads shall be bagged.

9. Remove existing sidewalk and complete fill of multi-use path along the north side of SR 45 from Sta. 60+00 to 62+50.

STAGE 3A:

1. Construct curb and gutter and Multi-Use Path (Sta. 59+00 to 60+00) on north side of SR 45.

2. Construct median at IU Tech Drive.

STAGE 3B:

1. Construct Mill and Overlay along SR 45. Mill and Overlay remaining width at SR 46.

2. Remove remaining existing sidewalk and temporary pavement for pedestrians and complete fill of Multi-Use path along the north side of SR 45 from Sta 59+00 to 59+60.

3. Construction shall be completed during night hours with the use of Traffic Control Flagger Operations per INDOT Std. E801-TCFO.

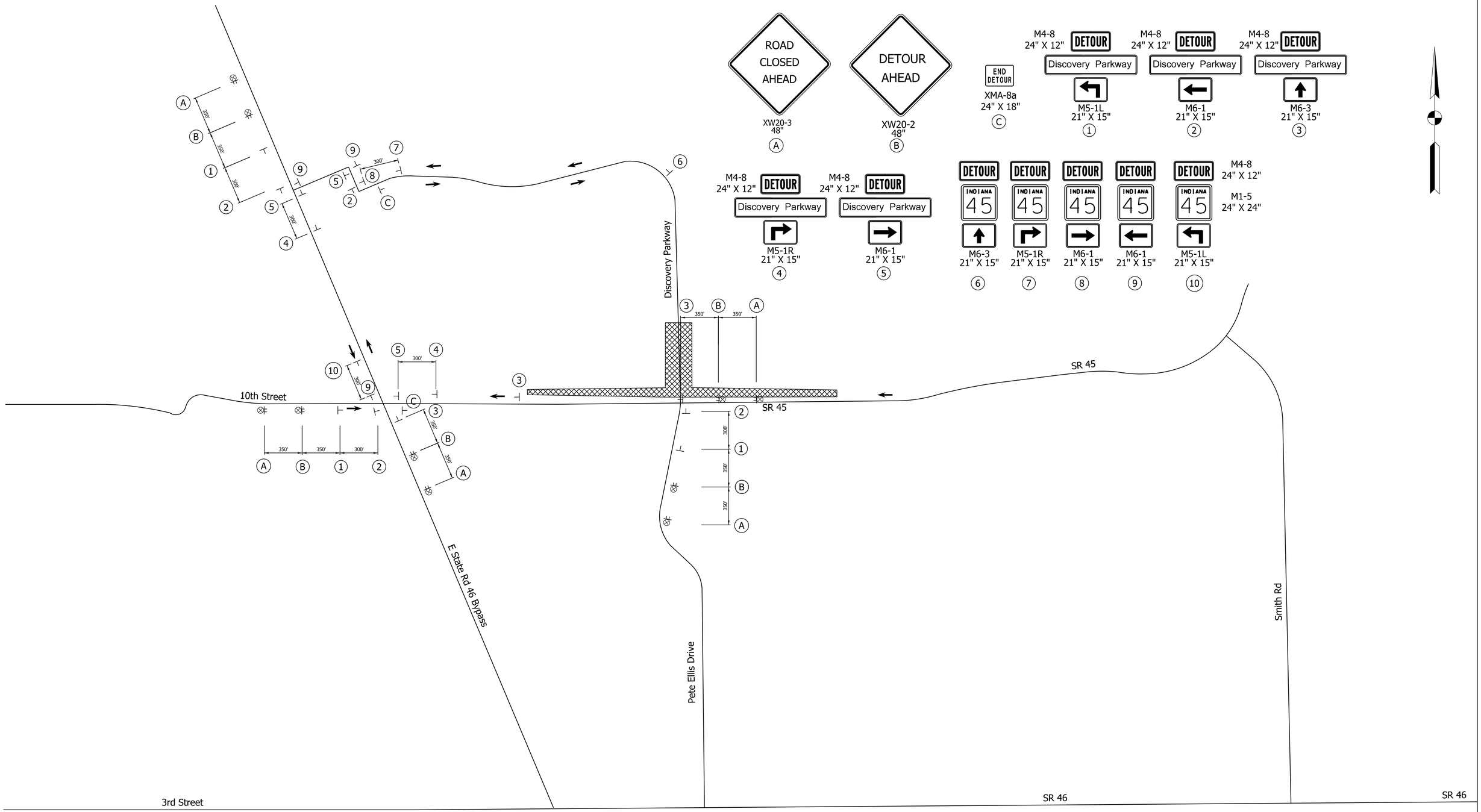

Note:
1. Pedestrian detour will be provided in future submittal.
2. Length of detour = 1.2 miles

LEGEND:

- Detour Route
- Construction Area
- Construction Warning Lights, A
- Construction Sign
- Detour Route Marker

NOT FOR CONSTRUCTION

RECOMMENDED FOR APPROVAL _____ 3/20/2023
DESIGN ENGINEER DATE

DESIGNED: MM 3/20/2023 DRAWN: MM 3/20/2023
CHECKED: KT 3/20/2023 CHECKED: KT 3/20/2023

INDIANA DEPARTMENT OF TRANSPORTATION

MAINTENANCE OF TRAFFIC
STAGE 1 DISCOVERY PARKWAY TRAFFIC CLOSURE
OFFICIAL DETOUR ROUTE

SCALE	BRIDGE FILE
	N/A
	DESIGNATION
	1800199
SURVEY BOOK	SHEETS
Electronic	13 of 32
CONTRACT	PROJECT
R-41465	1800199

PlotSet: PLOT_DATE$ TIME$ AM_PM

L:\INDOT\18070904-10\Draw\Sheets\Sht_MOT_Detour_Stg1.dgn

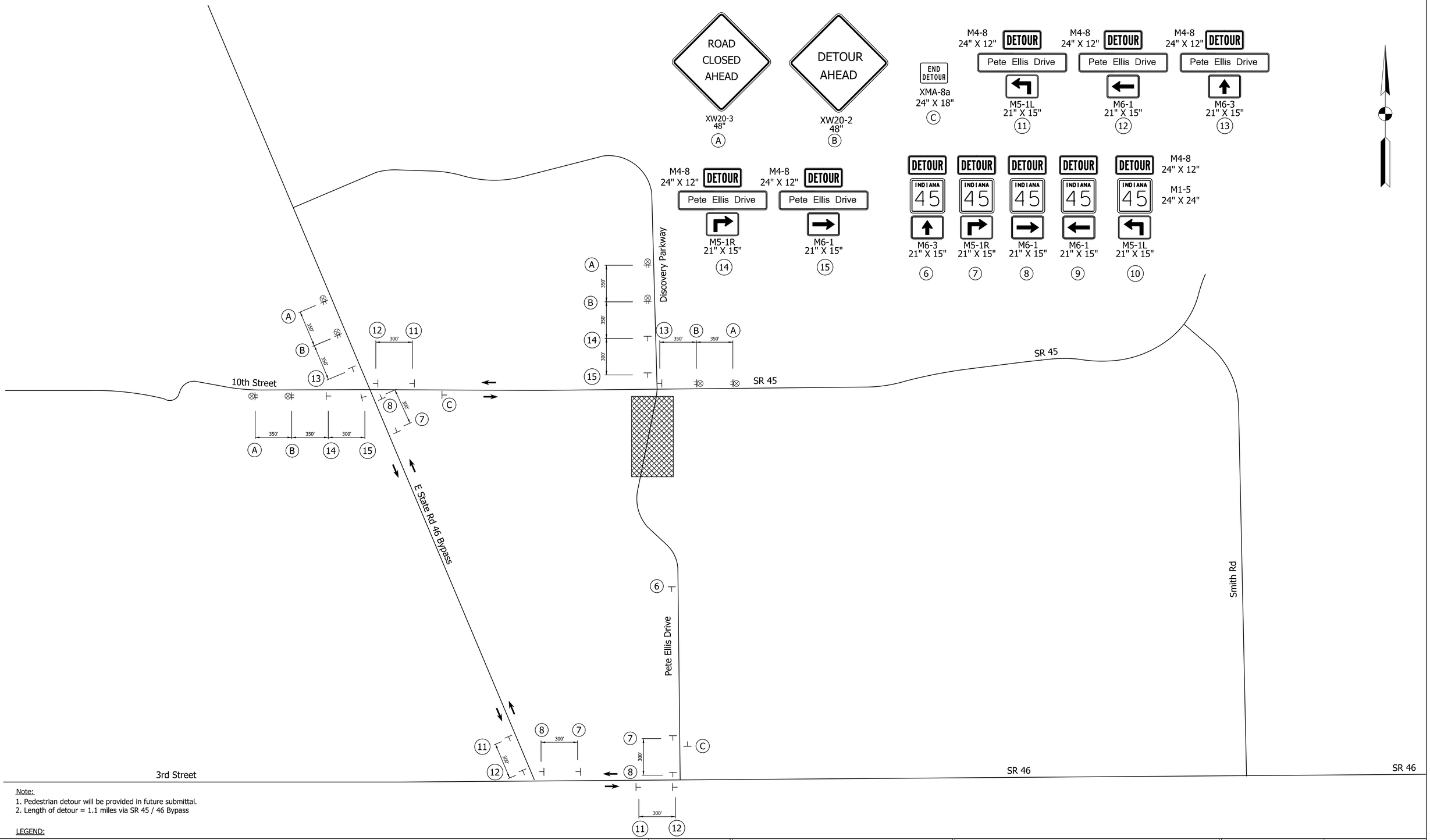

Note:
1. Pedestrian detour will be provided in future submittal.
2. Length of detour = 1.1 miles via SR 45 / 46 Bypass

LEGEND:

- Detour Route
- Construction Area
- Construction Warning Lights, A
- Construction Sign
- Detour Route Marker

NOT FOR CONSTRUCTION

RECOMMENDED FOR APPROVAL — DESIGN ENGINEER — DATE 3/20/2023

DESIGNED: MM 3/20/2023 | DRAWN: MM 3/20/2023

CHECKED: KT 3/20/2023 | CHECKED: KT 3/20/2023

INDIANA DEPARTMENT OF TRANSPORTATION

MAINTENANCE OF TRAFFIC
STAGE 2 PETE ELLIS DRIVE TRAFFIC CLOSURE
OFFICIAL DETOUR ROUTE

SCALE	BRIDGE FILE
	N/A
	DESIGNATION
	1800199

SURVEY BOOK	SHEETS		
Electronic	14	of	32
CONTRACT	PROJECT		
R-41465	1800199		

PlotBy: PLOT_DATE: $DATE$ TIME: $TIME$ AM_PM

L:\INDOT\18070904-10\Draw\Sheets\Sht_MOT_Detour_Stg2.dgn

Note:

Temporary Pavement shall be constucted with the use of Traffic Control Flaggers. Constuction shall only be permitted during night/weekend hours. Contractor shall follow INDOT Standard E 801-TCFO Traffic Control Flagger Operationfor construction.

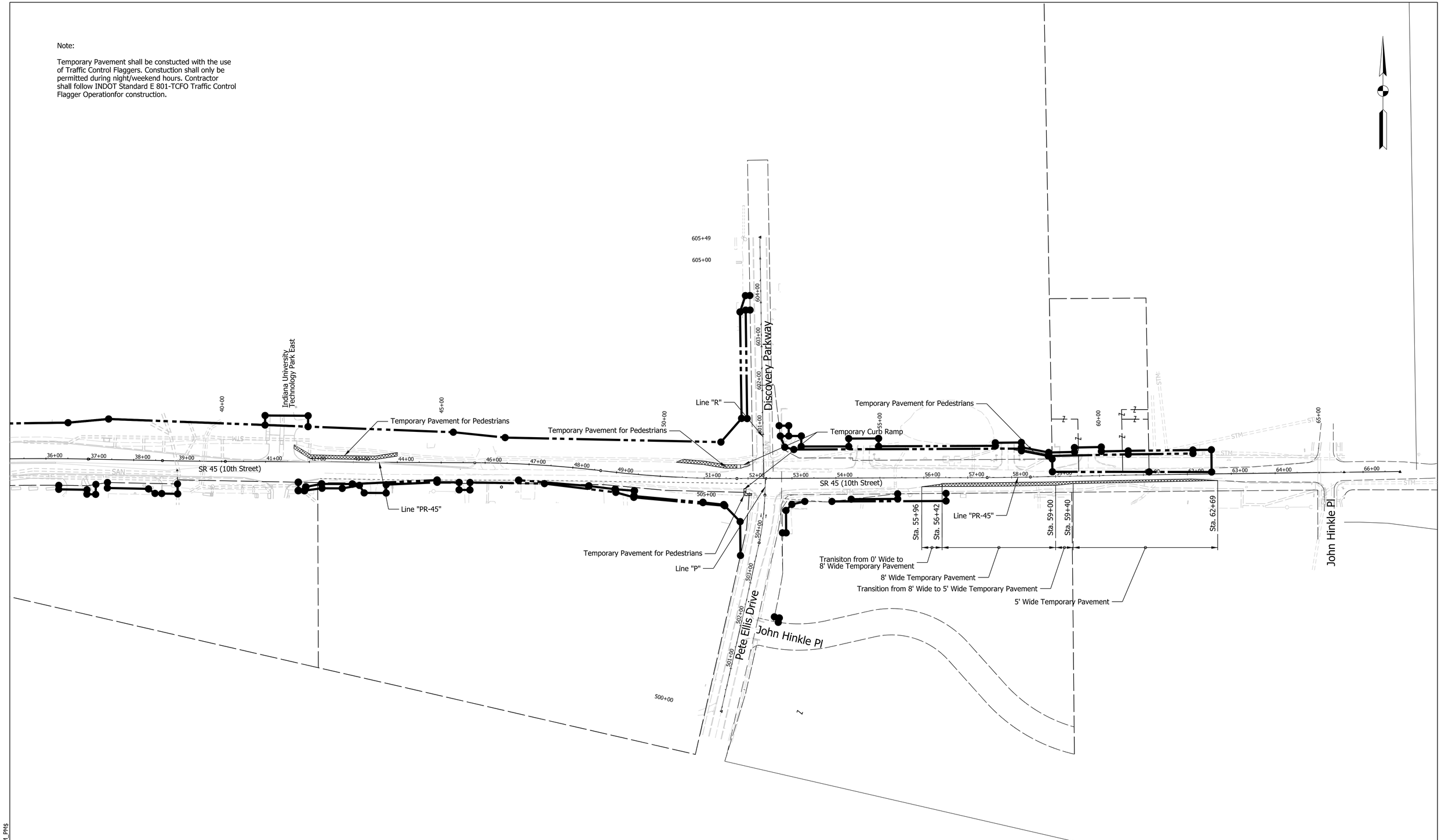

LEGEND:

- Construction Area
- Temporary Pavement
- Construction Warning Lights, A
- Temporary Plastic Barrier
- Temporary Concrete Barrier
- Direction of Traffic
- Temporary Channelizing Device
- Construction Sign
- (80) Temporary Pavement Marking, 4 in, Yellow
- (81) Temporary Pavement Marking, 4 in, White
- Existing R/W
- Proposed R/W

NOT FOR CONSTRUCTION

RECOMMENDED FOR APPROVAL — DESIGN ENGINEER — 3/20/2023 DATE

DESIGNED: MM 3/20/2023 | DRAWN: MM 3/20/2023

CHECKED: KT 3/20/2023 | CHECKED: KT 3/20/2023

INDIANA DEPARTMENT OF TRANSPORTATION

MAINTENANCE OF TRAFFIC STAGE 0A

SCALE	BRIDGE FILE
1"=100'	N/A
	DESIGNATION
	1800199
SURVEY BOOK	SHEETS
Electronic	15 of 32
CONTRACT	PROJECT
R-41465	1800199

PLOTDATE $DATE$ TIME$ AM_PM

File: L:\INDOT\18070904-10\Draw\Sheets\Sht_MOT_Stg0a.dgn
Model:$MODEL_NAME$

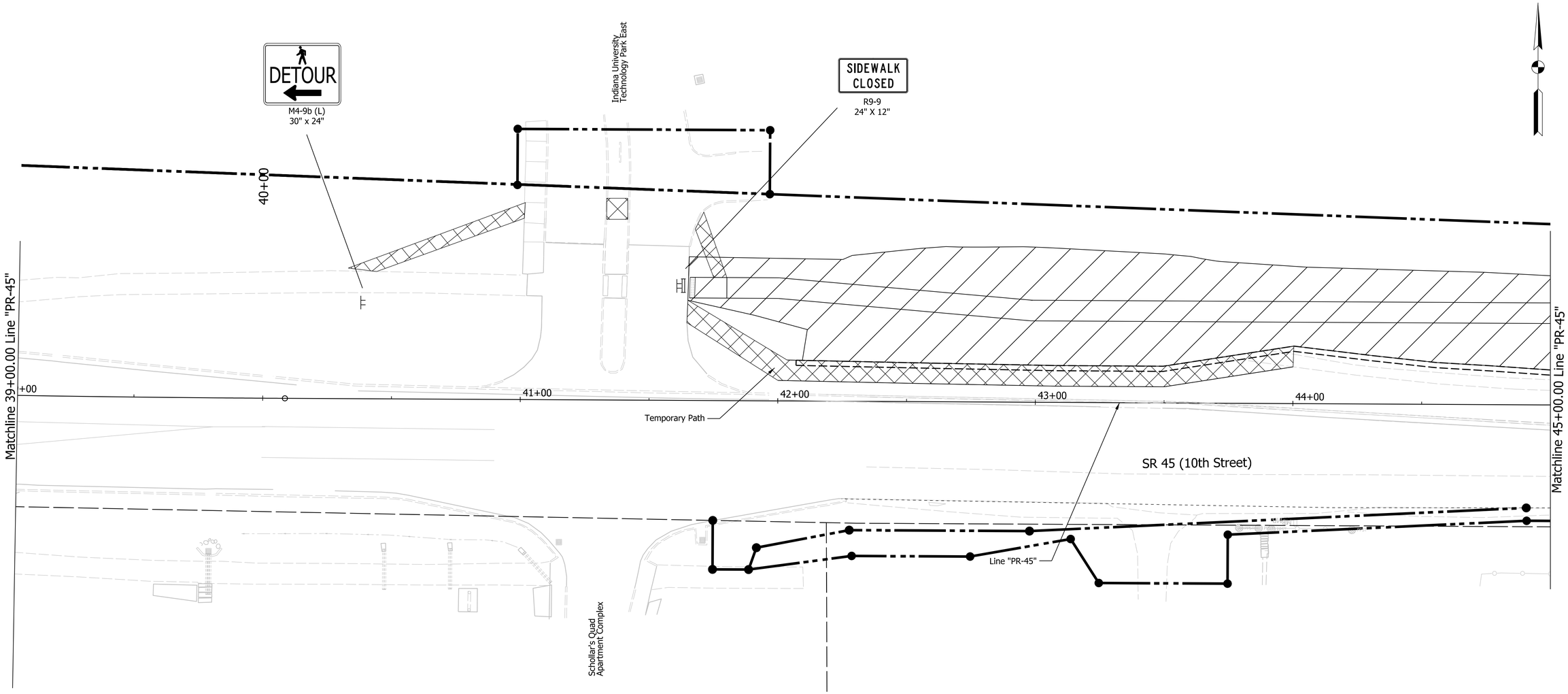

LEGEND:

- Construction Area
- Temporary Pavement
- Construction Warning Lights, A
- Temporary Plastic Barrier
- Temporary Concrete Barrier
- Direction of Traffic
- Temporary Channelizing Device
- Construction Sign
- 80 Temporary Pavement Marking, 4 in, Yellow
- 81 Temporary Pavement Marking, 4 in, White
- Existing R/W
- Proposed R/W

NOT FOR CONSTRUCTION

RECOMMENDED FOR APPROVAL — DESIGN ENGINEER — DATE 3/20/2023

DESIGNED: MM 3/20/2023 | DRAWN: MM 3/20/2023

CHECKED: KT 3/20/2023 | CHECKED: KT 3/20/2023

INDIANA DEPARTMENT OF TRANSPORTATION

MAINTENANCE OF TRAFFIC STAGE 0B
Sta. 39+00 to 45+00 Line "PR-45"

SCALE	BRIDGE FILE
1"=20'	N/A
	DESIGNATION
	1800199

SURVEY BOOK	SHEETS		
Electronic	16	of	32
CONTRACT	PROJECT		
R-41465	1800199		

PLOTTED BY $USERNAME$ ON $DATE$ AT $TIME$ AM_PM

File: L:\INDOT\18070904-10\Draw\Sheets\Sht_MOT_Stg0b_01.dgn
Model:$MODEL_NAME$

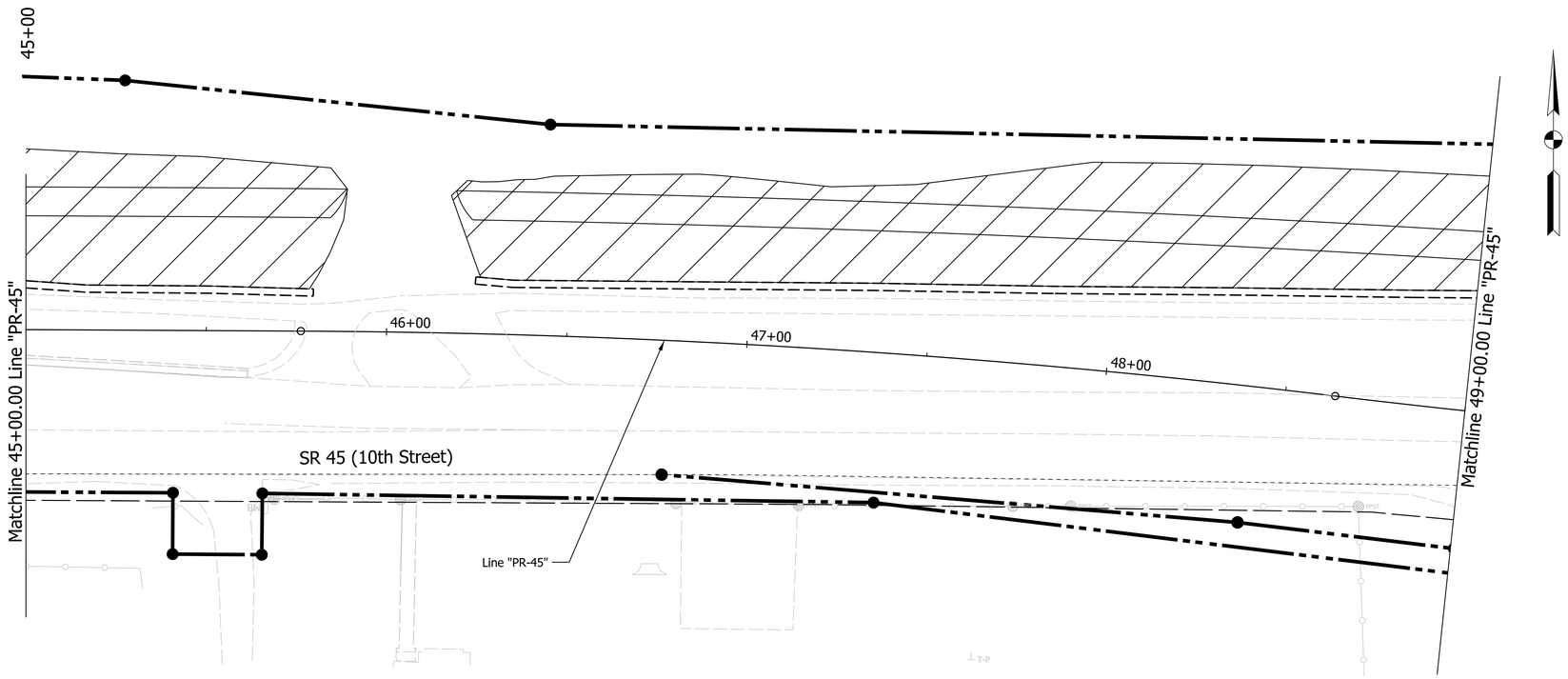

LEGEND:

- Construction Area
- Temporary Pavement
- Construction Warning Lights, A
- Temporary Plastic Barrier
- Temporary Concrete Barrier
- Direction of Traffic
- Temporary Channelizing Device
- Construction Sign
- 80 Temporary Pavement Marking, 4 in, Yellow
- 81 Temporary Pavement Marking, 4 in, White
- Existing R/W
- Proposed R/W

NOT FOR CONSTRUCTION

RECOMMENDED FOR APPROVAL — DESIGN ENGINEER — 3/20/2023 DATE

DESIGNED: MM	3/20/2023	DRAWN: MM	3/20/2023
CHECKED: KT	3/20/2023	CHECKED: KT	3/20/2023

INDIANA DEPARTMENT OF TRANSPORTATION

MAINTENANCE OF TRAFFIC STAGE 0B
Sta. 45+00 to 49+00 Line "PR-45"

SCALE	BRIDGE FILE
1"=20'	N/A
	DESIGNATION
	1800199

SURVEY BOOK	SHEETS		
Electronic	17	of	32
CONTRACT	PROJECT		
R-41465	1800199		

Plot$PLOT_DATE$ $PLOT_TIME$ AM_PM

File: L:\INDOT\18070904-10\Draw\Sheets\Sht_MOT_Stg0b_02.dgn
Model:$MODEL_NAME$

Notes

1. Contractors to maintain pedestrian crossing at Discovery Parkway during construction. Crossing shall have TTB on both sides with Snow Fence on top. The TTB and snow fence for pedestrian pathway will not be paid for separatley but shall be included in the cost of Maintaining Traffic.

2. Contractor shall not have equipment overhanging the pedestrian pathway at any time.

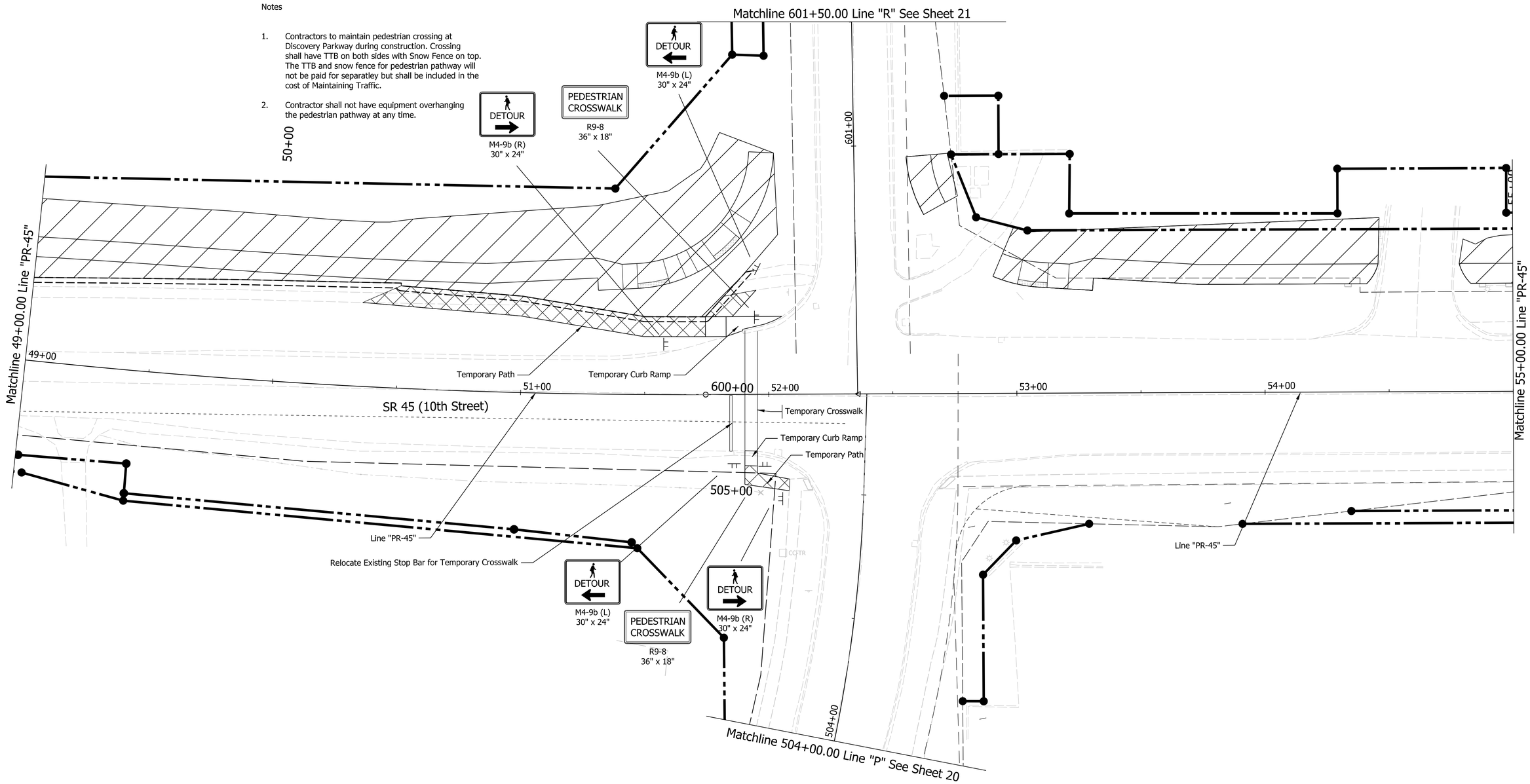

LEGEND:

- Construction Area
- Temporary Pavement
- Construction Warning Lights, A
- Temporary Plastic Barrier
- Temporary Concrete Barrier
- Direction of Traffic
- Temporary Channelizing Device
- Construction Sign
- 80 Temporary Pavement Marking, 4 in, Yellow
- 81 Temporary Pavement Marking, 4 in, White
- Existing R/W
- Proposed R/W

NOT FOR CONSTRUCTION

RECOMMENDED FOR APPROVAL — DESIGN ENGINEER — DATE 3/20/2023

DESIGNED: MM 3/20/2023 | DRAWN: MM 3/20/2023

CHECKED: KT 3/20/2023 | CHECKED: KT 3/20/2023

INDIANA DEPARTMENT OF TRANSPORTATION

MAINTENANCE OF TRAFFIC STAGE 0B
Sta. 49+00 to 55+00 Line "PR-45"

SCALE	BRIDGE FILE
1"=20	N/A
	DESIGNATION
	1800199
SURVEY BOOK	SHEETS
Electronic	18 of 32
CONTRACT	PROJECT
R-41465	1800199

PLOT_DATE$ PLOT_TIME$ AM_PM

File: L:\INDOT\18070904-10\Draw\Sheets\Sht_MOT_Stg0b_03.dgn
Model: $MODEL_NAME$

Note to Reviewer:

Further information regarding bus stops will be provided at a later date. Coordination is ongoing with Bloomington Transit

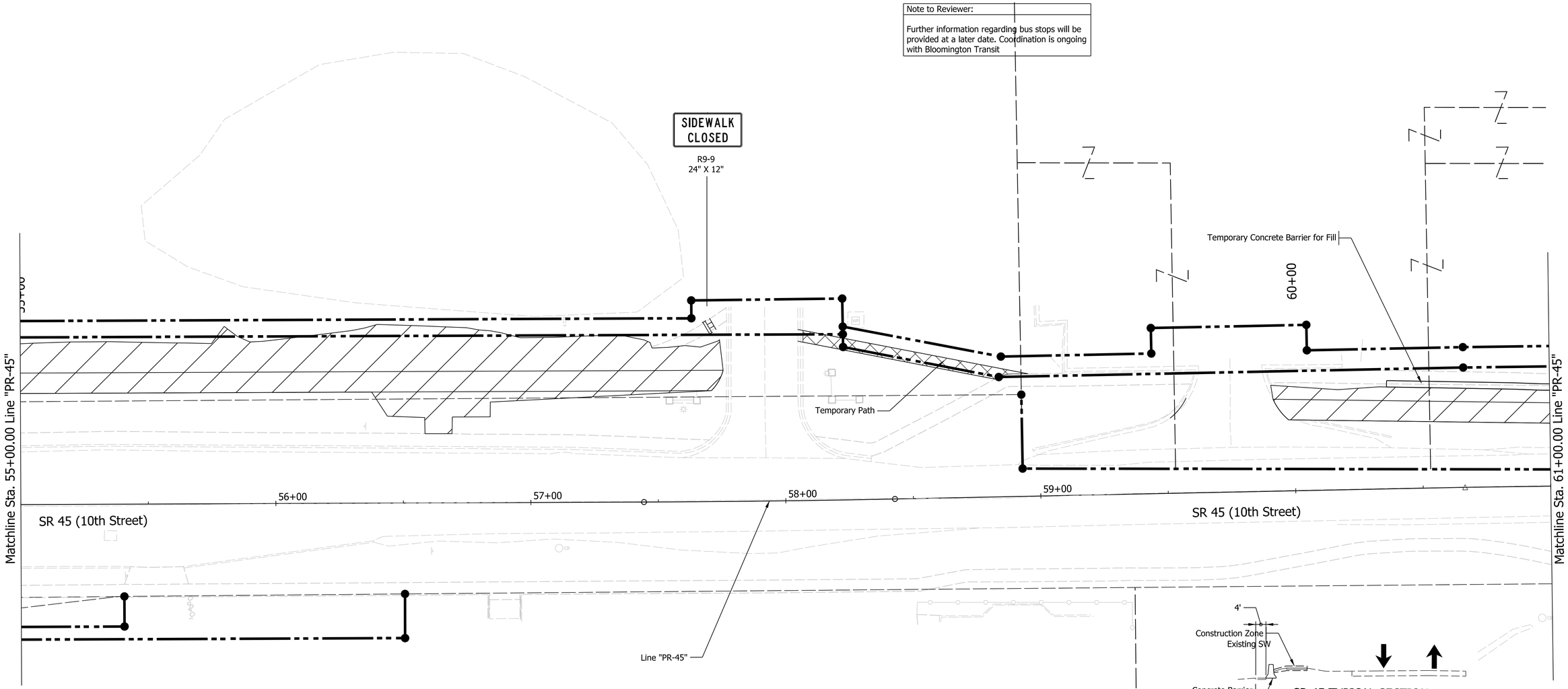

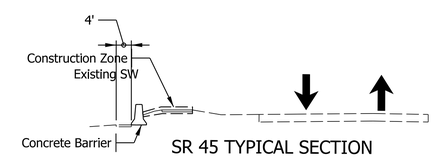

SR 45 TYPICAL SECTION
Where Concrete Barrier Present

LEGEND:

- Construction Area
- Temporary Pavement
- Construction Warning Lights, A
- Temporary Plastic Barrier
- Temporary Concrete Barrier
- Direction of Traffic
- Temporary Channelizing Device
- Construction Sign
- 80 Temporary Pavement Marking, 4 in, Yellow
- 81 Temporary Pavement Marking, 4 in, White
- Existing R/W
- Proposed R/W

NOT FOR CONSTRUCTION

RECOMMENDED FOR APPROVAL — DESIGN ENGINEER — 3/20/2023 DATE

DESIGNED: MM 3/20/2023 | DRAWN: MM 3/20/2023

CHECKED: KT 3/20/2023 | CHECKED: KT 3/20/2023

INDIANA DEPARTMENT OF TRANSPORTATION

MAINTENANCE OF TRAFFIC STAGE 0B
Sta. 55+00 to 61+00 Line "PR-45"

SCALE	BRIDGE FILE
1"=20'	N/A
	DESIGNATION
	1800199

SURVEY BOOK	SHEETS		
Electronic	19	of	32
CONTRACT	PROJECT		
R-41465	1800199		

PlotSCALE=1.000 PLOT_DATE$ PLOT_TIME$ AM_PM

File: L:\INDOT\18070904-10\Draw\Sheets\Sht_MOT_Stg0b_04.dgn
Model:$MODEL_NAME$

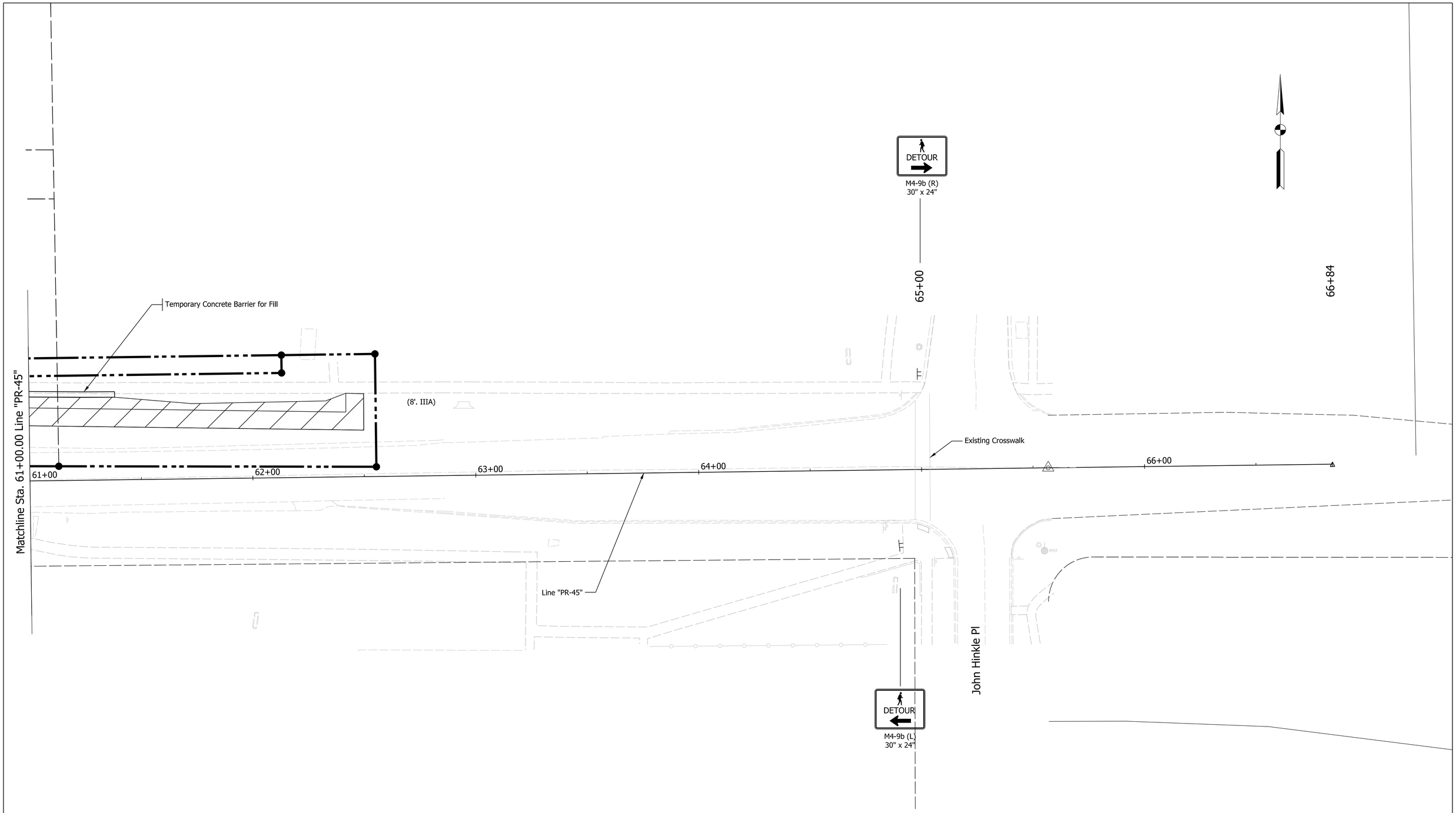

LEGEND:

- Construction Area
- Temporary Pavement
- Construction Warning Lights, A
- Temporary Plastic Barrier
- Temporary Concrete Barrier
- Direction of Traffic
- Temporary Channelizing Device
- Construction Sign
- 80 Temporary Pavement Marking, 4 in, Yellow
- 81 Temporary Pavement Marking, 4 in, White
- Existing R/W
- Proposed R/W

NOT FOR CONSTRUCTION

RECOMMENDED FOR APPROVAL — DESIGN ENGINEER — 3/20/2023 DATE

DESIGNED: MM	3/20/2023	DRAWN: MM	3/20/2023
CHECKED: KT	3/20/2023	CHECKED: KT	3/20/2023

INDIANA DEPARTMENT OF TRANSPORTATION

MAINTENANCE OF TRAFFIC STAGE 0B
Sta. 61+00 to 67+00 Line "PR-45"

SCALE	BRIDGE FILE
1"=20'	N/A
	DESIGNATION
	1800199
SURVEY BOOK	SHEETS
Electronic	20 of 32
CONTRACT	PROJECT
R-41465	1800199

PLOTTED BY $USERNAME$ ON $DATE$ AT $TIME$ AM_PM

File: L:\INDOT\18070904-10\Draw\Sheets\Sht_MOT_Stg0b_05.dgn
Model:$MODEL_NAME$

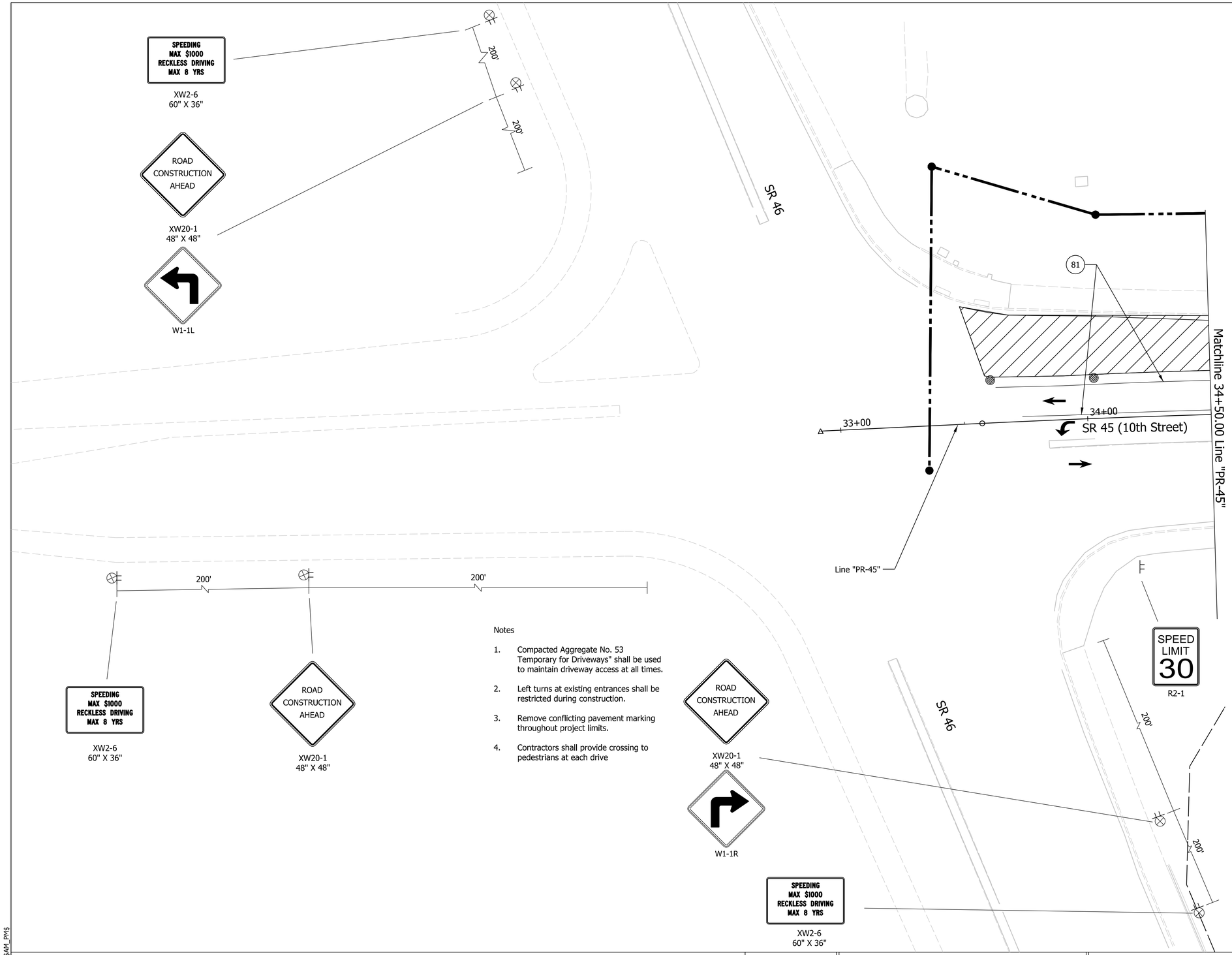

Notes

1. Compacted Aggregate No. 53 Temporary for Driveways" shall be used to maintain driveway access at all times.
2. Left turns at existing entrances shall be restricted during construction.
3. Remove conflicting pavement marking throughout project limits.
4. Contractors shall provide crossing to pedestrians at each drive

LEGEND:

- Construction Area
- Temporary Pavement
- Construction Warning Lights, A
- Temporary Plastic Barrier
- Temporary Concrete Barrier
- Direction of Traffic
- Temporary Channelizing Device
- Construction Sign
- 80 Temporary Pavement Marking, 4 in, Yellow
- 81 Temporary Pavement Marking, 4 in, White
- Existing R/W
- Proposed R/W

NOT FOR CONSTRUCTION

RECOMMENDED FOR APPROVAL _____ 3/20/2023
DESIGN ENGINEER DATE

DESIGNED: MM 3/20/2023 DRAWN: MM 3/20/2023
CHECKED: KT 3/20/2023 CHECKED: KT 3/20/2023

INDIANA DEPARTMENT OF TRANSPORTATION

MAINTENANCE OF TRAFFIC STAGE 1
Sta. 33+60 to 34.50 Line "PR-45"

SCALE	BRIDGE FILE
1"=20'	N/A
	DESIGNATION
	1800199

SURVEY BOOK	SHEETS		
Electronic	21	of	32
CONTRACT	PROJECT		
R-41465	1800199		

PLOT_DATE$ PLOT_TIME$ AM_PM

File: L:\INDOT\18070904-10\Draw\Sheets\Sht_MOT_Stg1_00.dgn
Model:$MODEL_NAME$

Notes

1. Compacted Aggregate No. 53 Temporary for Driveways" shall be used to maintain driveway access at all times.
2. Left turns at existing entrances shall be restricted during construction.
3. Remove conflicting pavement marking throughout project limits.
4. Contractors shall provide crossing to pedestrians at each drive

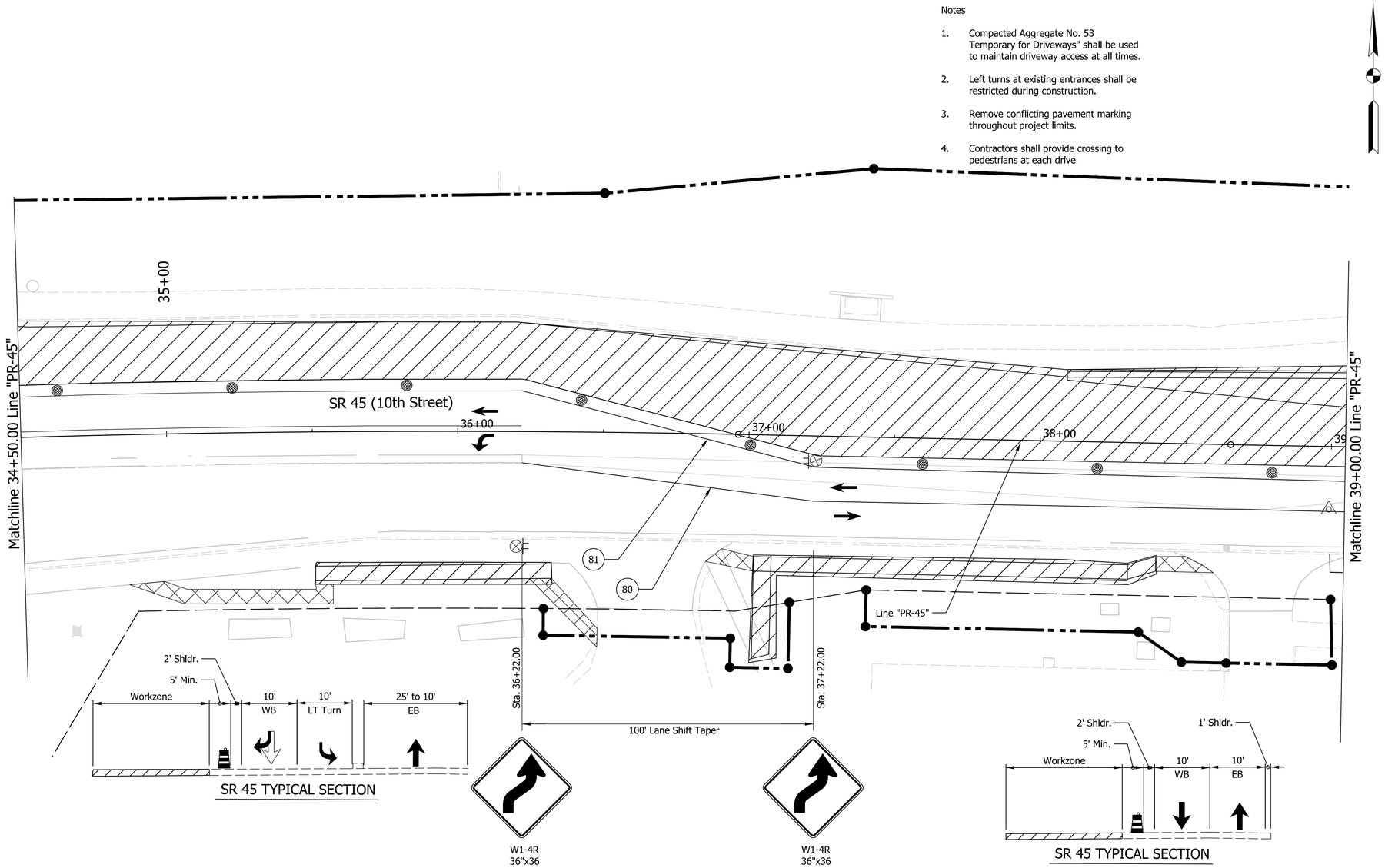

LEGEND:

- Construction Area
- Temporary Pavement
- Construction Warning Lights, A
- Temporary Plastic Barrier
- Temporary Concrete Barrier
- Direction of Traffic
- Temporary Channelizing Device
- Construction Sign
- 80 Temporary Pavement Marking, 4 in, Yellow
- 81 Temporary Pavement Marking, 4 in, White
- Existing R/W
- Proposed R/W

NOT FOR CONSTRUCTION

RECOMMENDED FOR APPROVAL — DESIGN ENGINEER — DATE 3/20/2023

DESIGNED: MM 3/20/2023 | DRAWN: MM 3/20/2023

CHECKED: KT 3/20/2023 | CHECKED: KT 3/20/2023

INDIANA DEPARTMENT OF TRANSPORTATION

MAINTENANCE OF TRAFFIC STAGE 1
Sta. 34+50.00 to 39+00 Line "PR-45"

SCALE	BRIDGE FILE
1"=20'	N/A
	DESIGNATION
	1800199
SURVEY BOOK	SHEETS
Electronic	22 of 32
CONTRACT	PROJECT
R-41465	1800199

PlotSet: PLOT_DATE$ PLOT_TIME$ AM_PM

File: L:\INDOT\18070904-10\Draw\Sheets\Sht_MOT_Stg1_01.dgn
Model: $MODEL_NAME$

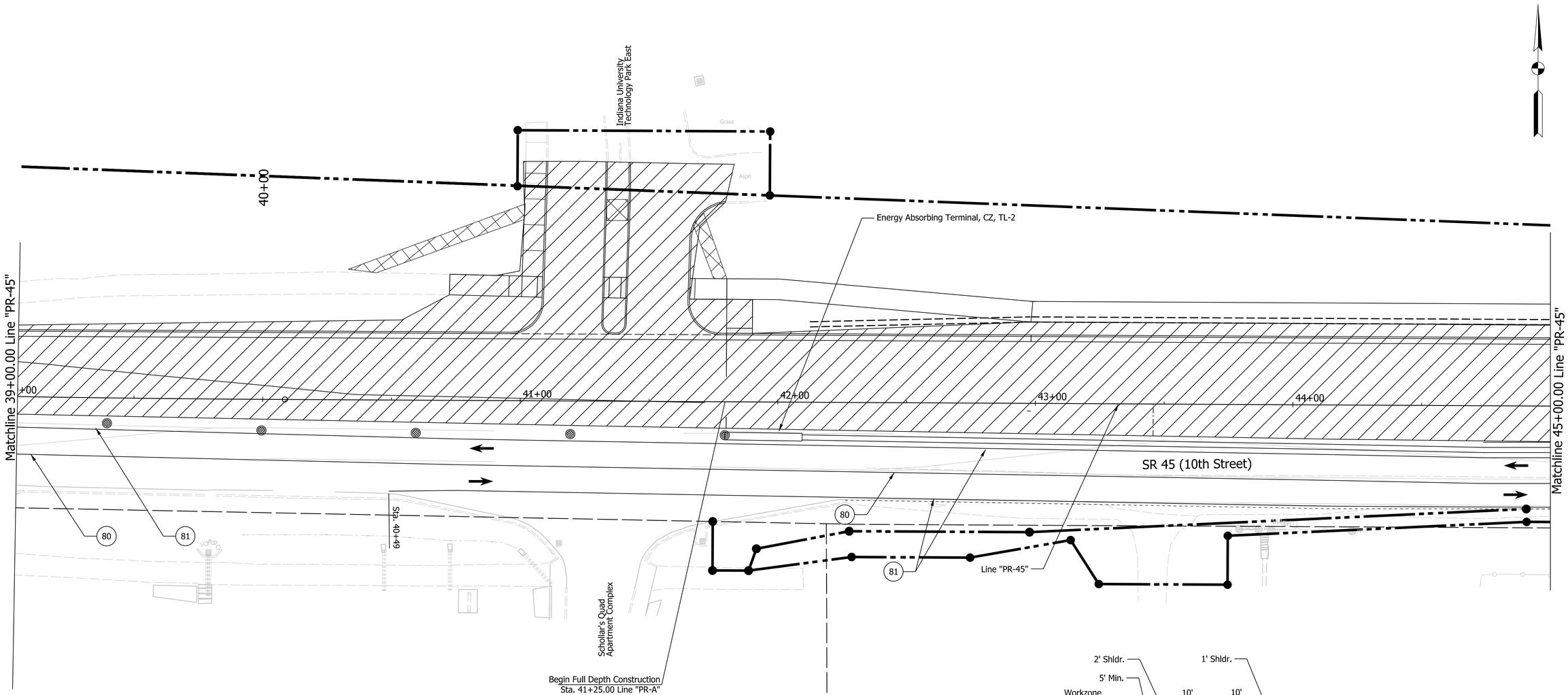

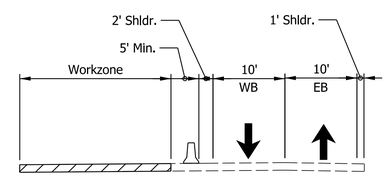

SR 45 TYPICAL SECTION

Notes

1. Compacted Aggregate No. 53 Temporary for Driveways" shall be used to maintain driveway access at all times.
2. Left turns at existing entrances shall be restricted during construction.
3. Remove conflicting pavement marking throughout project limits.
4. Contractors shall provide crossing to pedestrians at each drive.
5. Contractor shall coordinate entrance reconstruction with IU propor to start of any construction.

LEGEND:

- Construction Area
- Temporary Pavement
- Construction Warning Lights, A
- Temporary Plastic Barrier
- Temporary Concrete Barrier
- Direction of Traffic
- Temporary Channelizing Device
- Construction Sign
- 80 Temporary Pavement Marking, 4 in, Yellow
- 81 Temporary Pavement Marking, 4 in, White
- Existing R/W
- Proposed R/W

NOT FOR CONSTRUCTION

RECOMMENDED FOR APPROVAL	DESIGN ENGINEER	3/20/2023	DATE
DESIGNED: MM	3/20/2023	DRAWN: MM	3/20/2023
CHECKED: KT	3/20/2023	CHECKED: KT	3/20/2023

INDIANA DEPARTMENT OF TRANSPORTATION

MAINTENANCE OF TRAFFIC STAGE 1
Sta. 39+00 to 45+00 Line "PR-45"

SCALE	BRIDGE FILE
1"=20'	N/A
	DESIGNATION
	1800199
SURVEY BOOK	SHEETS
Electronic	23 of 32
CONTRACT	PROJECT
R-41465	1800199

PLOTTED BY $USERNAME$ ON $DATE$ AT $TIME$ AM_PM

File: L:\INDOT\18070904-10\Draw\Sheets\Sht_MOT_Stg1_02.dgn
Model: $MODEL_NAME$

Notes

1. Compacted Aggregate No. 53 Temporary for Driveways" shall be used to maintain driveway access at all times.
2. Left turns at existing entrances shall be restricted during construction.
3. Remove conflicting pavement marking throughout project limits.
4. Contractors shall provide crossing to pedestrians at each drive

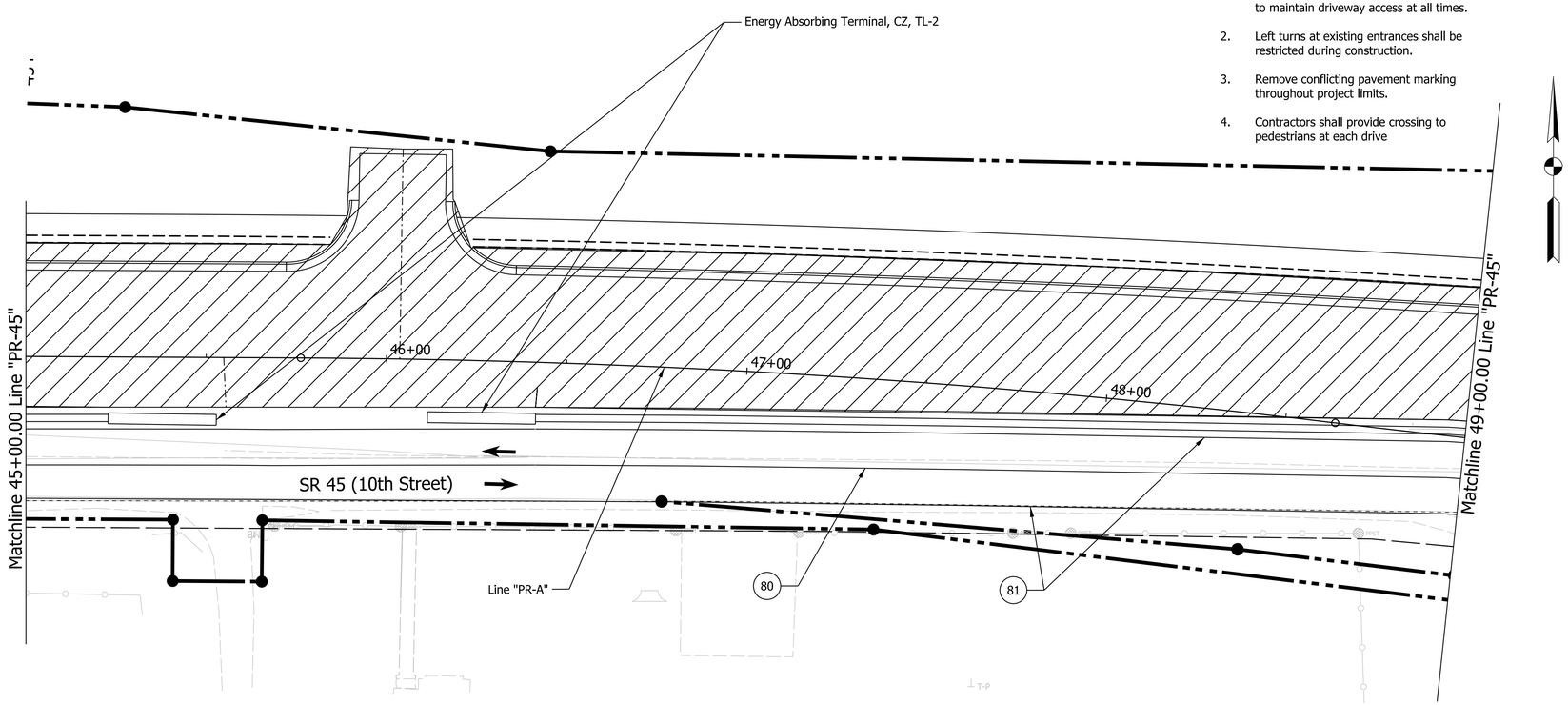

Notes

1. Compacted Aggregate No. 53 Temporary for Driveways" shall be used to maintain driveway access at all times.
2. Left turns at existing entrances shall be restricted during construction.
3. Remove conflicting pavement marking throughout project limits.

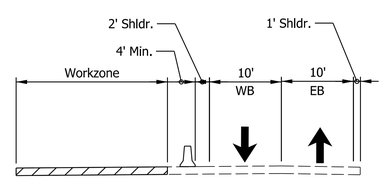

SR 45 TYPICAL SECTION

LEGEND:

- Construction Area
- Temporary Pavement
- Construction Warning Lights, A
- Temporary Plastic Barrier
- Temporary Concrete Barrier
- Direction of Traffic
- Temporary Channelizing Device
- Construction Sign
- 80 Temporary Pavement Marking, 4 in, Yellow
- 81 Temporary Pavement Marking, 4 in, White
- Existing R/W
- Proposed R/W

NOT FOR CONSTRUCTION

RECOMMENDED FOR APPROVAL — DESIGN ENGINEER — 3/20/2023 DATE

DESIGNED: MM 3/20/2023 | DRAWN: MM 3/20/2023

CHECKED: KT 3/20/2023 | CHECKED: KT 3/20/2023

INDIANA DEPARTMENT OF TRANSPORTATION

MAINTENANCE OF TRAFFIC STAGE 1
Sta. 45+00 to 49+00 Line "PR-45"

SCALE	BRIDGE FILE
1"=20'	N/A
	DESIGNATION
	1800199

SURVEY BOOK	SHEETS
Electronic	24 of 32
CONTRACT	PROJECT
R-41465	1800199

PlotDate$ PLOT_DATE$ PLOT_TIME$ AM_PM

File: L:\INDOT\18070904-10\Draw\Sheets\Sht_MOT_Stg1_03.dgn
Model:$MODEL_NAME$

Notes

1. Compacted Aggregate No. 53 Temporary for Driveways" shall be used to maintain driveway access at all times.
2. Left turns at existing entrances shall be restricted during construction.
3. Remove conflicting pavement marking throughout project limits.
4. Contractors to maintain pedestrian crossing at Discovery Parkway during construction. Crossing shall have TTB on both sides with Snow Fence on top. The TTB and snow fence for pedestrian pathway will not be paid for separatley but shall be included in the cost of Maintaining Traffic.
5. Contractor shall not have equipment overhanging the pedestrian pathway at any time.
6. Contractors shall provide crossing to pedestrians at each drive

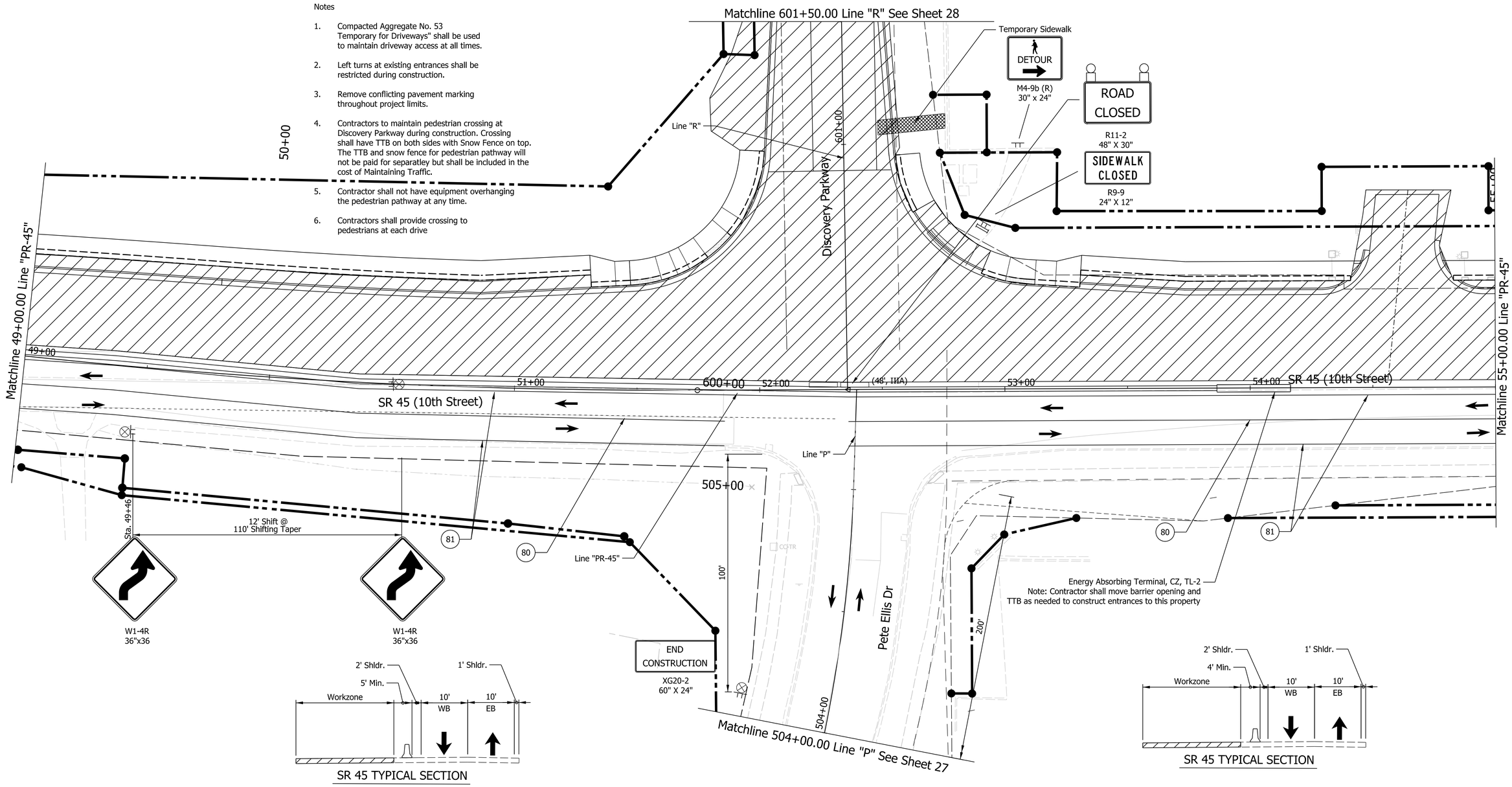

LEGEND:

- Construction Area
- Temporary Pavement
- Construction Warning Lights, A
- Temporary Plastic Barrier
- Temporary Concrete Barrier
- Direction of Traffic
- Temporary Channelizing Device
- Construction Sign
- (80) Temporary Pavement Marking, 4 in, Yellow
- (81) Temporary Pavement Marking, 4 in, White
- Existing R/W
- Proposed R/W

NOT FOR CONSTRUCTION

RECOMMENDED FOR APPROVAL — DESIGN ENGINEER — 3/20/2023 DATE

DESIGNED: MM 3/20/2023 | DRAWN: MM 3/20/2023

CHECKED: KT 3/20/2023 | CHECKED: KT 3/20/2023

INDIANA DEPARTMENT OF TRANSPORTATION

MAINTENANCE OF TRAFFIC STAGE 1
Sta. 49+00 to 55+00 Line "PR-45"

SCALE	BRIDGE FILE
1"=20	N/A
	DESIGNATION
	1800199
SURVEY BOOK	SHEETS
Electronic	25 of 32
CONTRACT	PROJECT
R-41465	1800199

Plot$PLOT_DATE$ $PLOT_TIME$ AM_PM

File: L:\INDOT\18070904-10\Draw\Sheets\Sht_MOT_Stg1_04.dgn
Model:$MODEL_NAME$

Notes

1. Compacted Aggregate No. 53 Temporary for Driveways" shall be used to maintain driveway access at all times.
2. Left turns at existing entrances shall be restricted during construction.
3. Remove conflicting pavement marking throughout project limits.
4. Contractors shall provide crossing to pedestrians at each drive

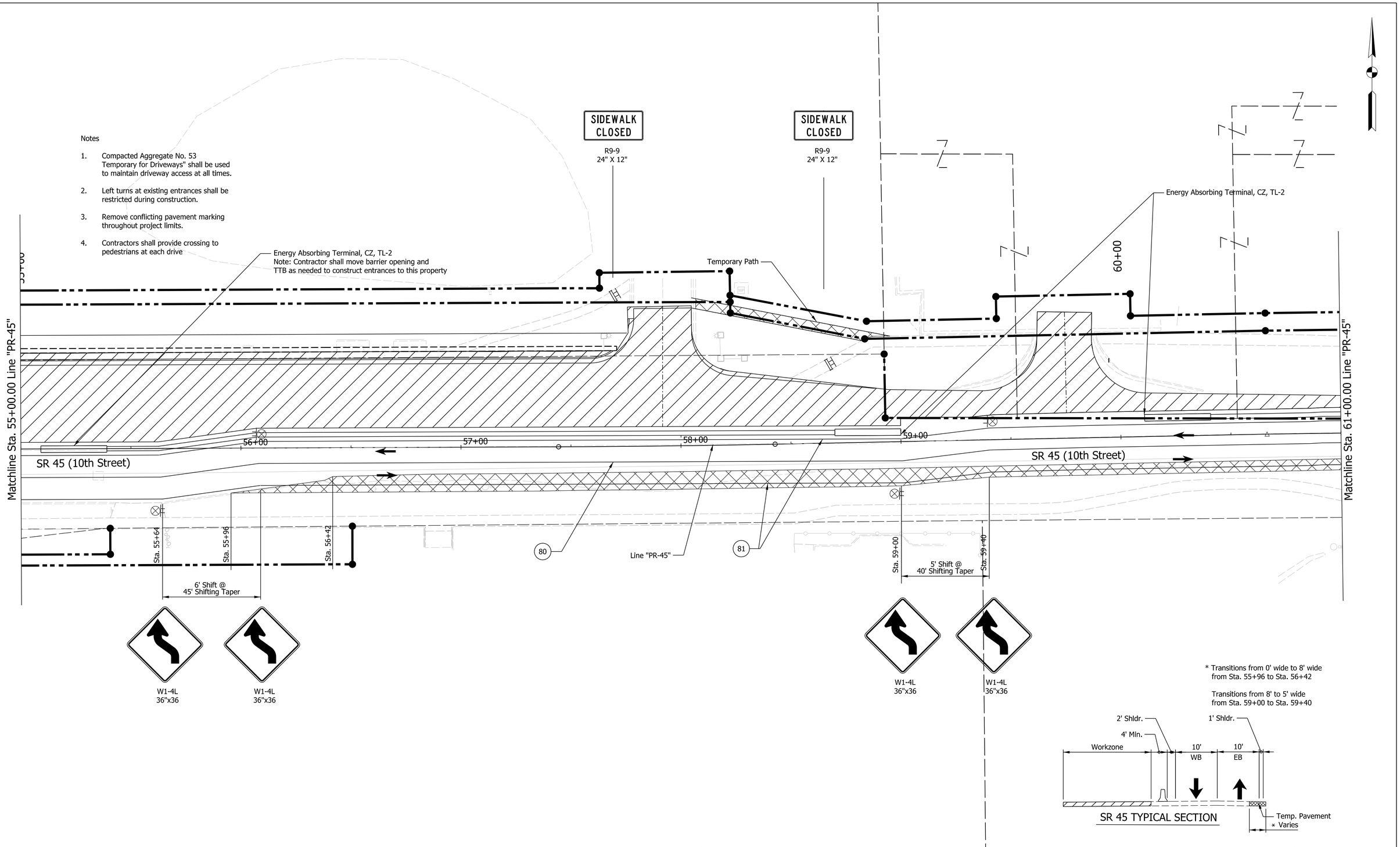

LEGEND:

- Construction Area
- Temporary Pavement
- Construction Warning Lights, A
- Temporary Plastic Barrier
- Temporary Concrete Barrier
- Direction of Traffic
- Temporary Channelizing Device
- Construction Sign
- (80) Temporary Pavement Marking, 4 in, Yellow
- (81) Temporary Pavement Marking, 4 in, White
- Existing R/W
- Proposed R/W

NOT FOR CONSTRUCTION

RECOMMENDED FOR APPROVAL	DESIGN ENGINEER	3/20/2023 DATE
DESIGNED: MM 3/20/2023	DRAWN: MM 3/20/2023	
CHECKED: KT 3/20/2023	CHECKED: KT 3/20/2023	

INDIANA DEPARTMENT OF TRANSPORTATION

MAINTENANCE OF TRAFFIC STAGE 1
Sta. 55+00 to 61+00 Line "PR-45"

SCALE	BRIDGE FILE
1"=20'	N/A
	DESIGNATION
	1800199
SURVEY BOOK	SHEETS
Electronic	26 of 32
CONTRACT	PROJECT
R-41465	1800199

PLOT_DATE$ PLOT_TIME$ AM_PM

File: L:\INDOT\18070904-10\Draw\Sheets\Sht_MOT_Stg1_05.dgn
Model: $MODEL_NAME$

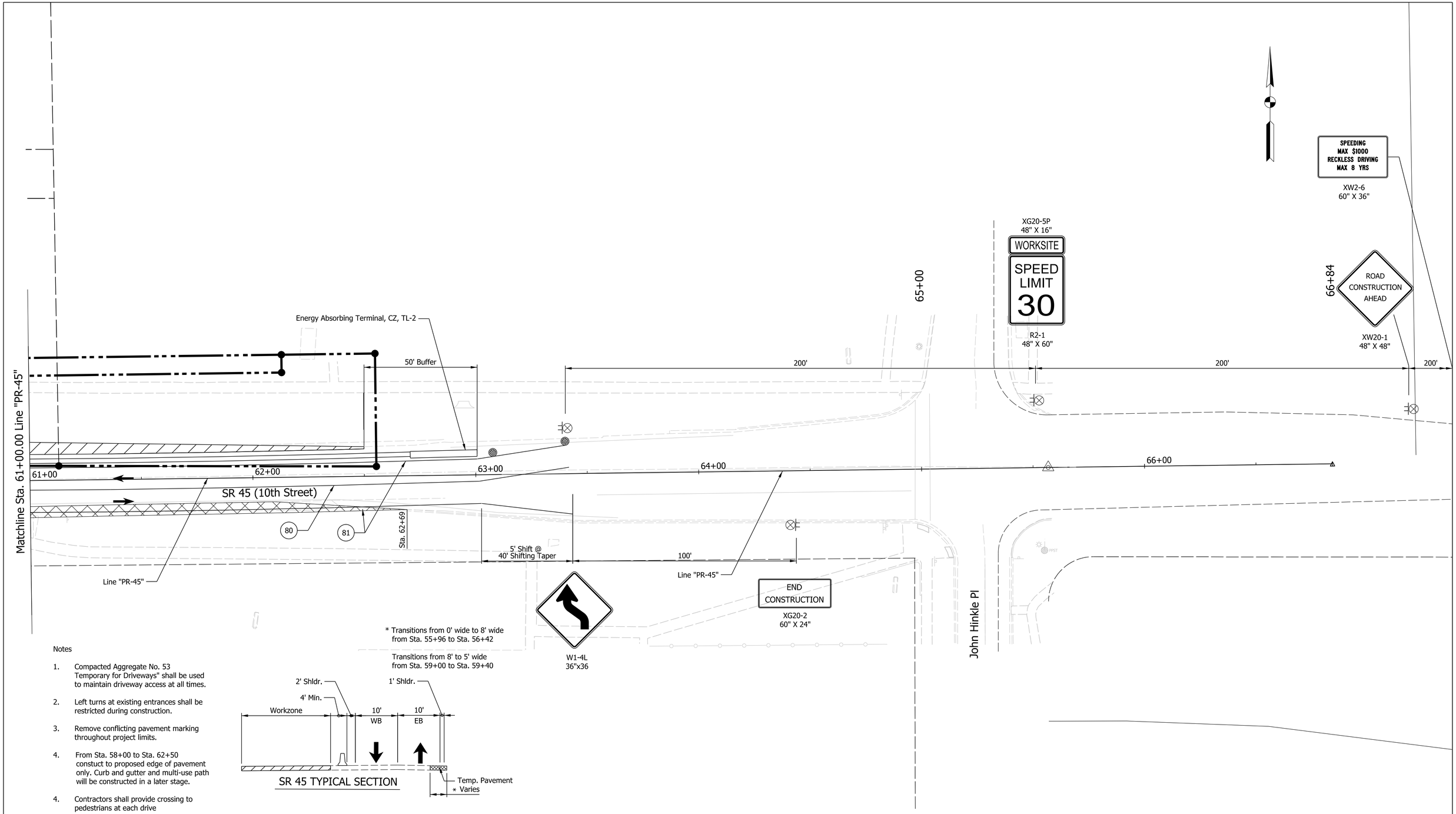

SR 45 TYPICAL SECTION

Notes

1. Compacted Aggregate No. 53 Temporary for Driveways" shall be used to maintain driveway access at all times.
2. Left turns at existing entrances shall be restricted during construction.
3. Remove conflicting pavement marking throughout project limits.
4. From Sta. 58+00 to Sta. 62+50 constuct to proposed edge of pavement only. Curb and gutter and multi-use path will be constructed in a later stage.
4. Contractors shall provide crossing to pedestrians at each drive

LEGEND:

- Construction Area
- Temporary Pavement
- Construction Warning Lights, A
- Temporary Plastic Barrier
- Temporary Concrete Barrier
- Direction of Traffic
- Temporary Channelizing Device
- Construction Sign
- 80 Temporary Pavement Marking, 4 in, Yellow
- 81 Temporary Pavement Marking, 4 in, White
- Existing R/W
- Proposed R/W

NOT FOR CONSTRUCTION

RECOMMENDED FOR APPROVAL — DESIGN ENGINEER — 3/20/2023 DATE

DESIGNED: MM 3/20/2023 | DRAWN: MM 3/20/2023

CHECKED: KT 3/20/2023 | CHECKED: KT 3/20/2023

INDIANA DEPARTMENT OF TRANSPORTATION

MAINTENANCE OF TRAFFIC STAGE 1
Sta. 61+00 to 67+00 Line "PR-45"

SCALE	BRIDGE FILE
1"=20'	N/A
	DESIGNATION
	1800199
SURVEY BOOK	SHEETS
Electronic	27 of 32
CONTRACT	PROJECT
R-41465	1800199

PlotSPLOT_DATE$ PLOT_TIME$ AM_PM

File: L:\INDOT\18070904-10\Draw\Sheets\Sht_MOT_Stg1_06.dgn
Model:$MODEL_NAME$

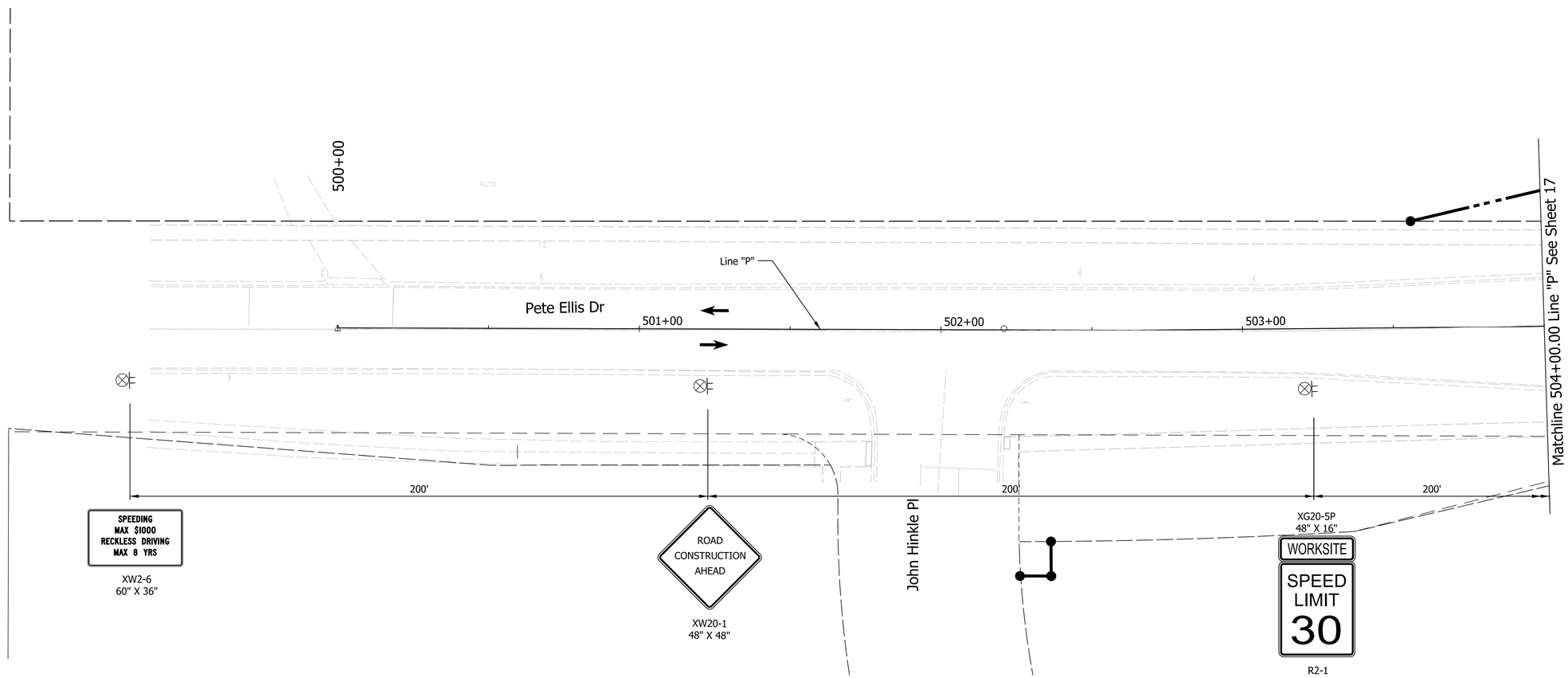

LEGEND:

- Construction Area
- Temporary Pavement
- Construction Warning Lights, A
- Temporary Plastic Barrier
- Temporary Concrete Barrier
- Direction of Traffic
- Temporary Channelizing Device
- Construction Sign
- (80) Temporary Pavement Marking, 4 in, Yellow
- (81) Temporary Pavement Marking, 4 in, White
- Existing R/W
- Proposed R/W

NOT FOR CONSTRUCTION

RECOMMENDED FOR APPROVAL — DESIGN ENGINEER — 3/20/2023 DATE

DESIGNED: MM 3/20/2023 | DRAWN: MM 3/20/2023

CHECKED: KT 3/20/2023 | CHECKED: KT 3/20/2023

INDIANA DEPARTMENT OF TRANSPORTATION

MAINTENANCE OF TRAFFIC STAGE 1
Sta. 500+00 to 504+00 Line "P"

SCALE	BRIDGE FILE
1"=20'	N/A
	DESIGNATION
	1800199
SURVEY BOOK	SHEETS
Electronic	28 of 32
CONTRACT	PROJECT
R-41465	1800199

PlotSPLOT_DATE$ PLOT_TIME$ AM_PM

File: L:\INDOT\18070904-10\Draw\Sheets\Sht_MOT_Stg1_07.dgn
Model:$MODEL_NAME$

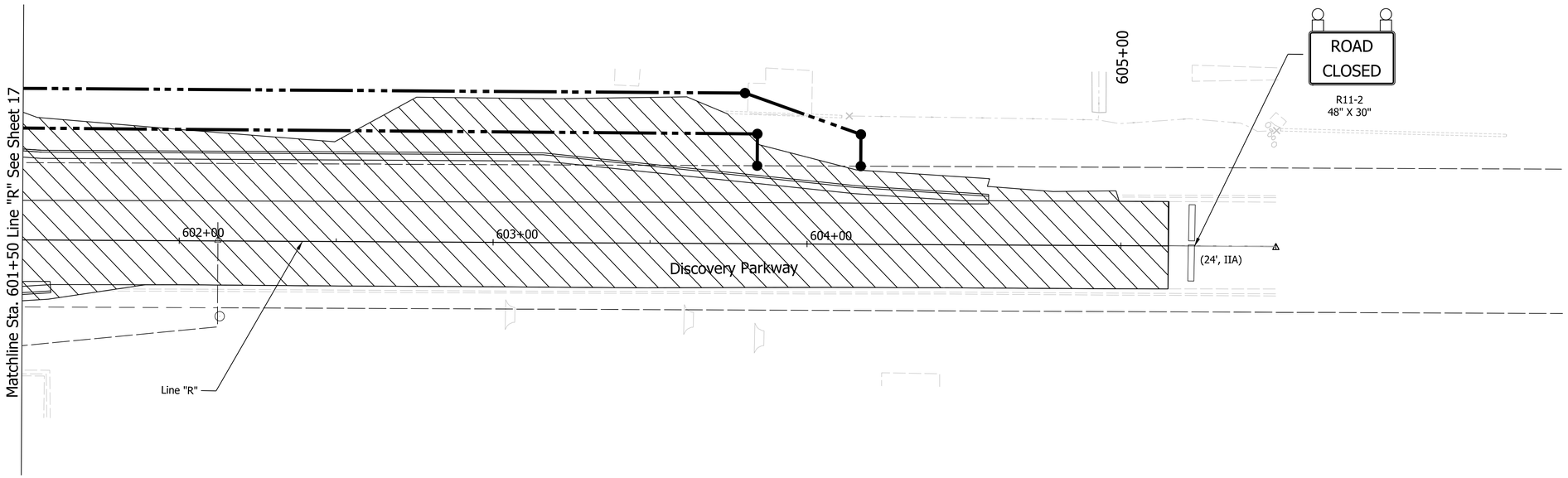

LEGEND:

- Construction Area
- Temporary Pavement
- Construction Warning Lights, A
- Temporary Plastic Barrier
- Temporary Concrete Barrier
- Direction of Traffic
- Temporary Channelizing Device
- Construction Sign
- (80) Temporary Pavement Marking, 4 in, Yellow
- (81) Temporary Pavement Marking, 4 in, White
- Existing R/W
- Proposed R/W

NOT FOR CONSTRUCTION

RECOMMENDED FOR APPROVAL — DESIGN ENGINEER — 3/20/2023 DATE

DESIGNED: MM 3/20/2023 | DRAWN: MM 3/20/2023

CHECKED: KT 3/20/2023 | CHECKED: KT 3/20/2023

INDIANA DEPARTMENT OF TRANSPORTATION

MAINTENANCE OF TRAFFIC STAGE 1
Sta. 601+50 to 605+50 Line "R"

SCALE	BRIDGE FILE
1"=20'	N/A
	DESIGNATION
	1800199

SURVEY BOOK	SHEETS		
Electronic	29	of	32
CONTRACT	PROJECT		
R-41465	1800199		

Plot: PLOT_DATE$ $TIME$ AM_PM
File: L:\INDOT\18070904-10\Draw\Sheets\Sht_MOT_Stg1_08.dgn
Model: $MODEL_NAME$

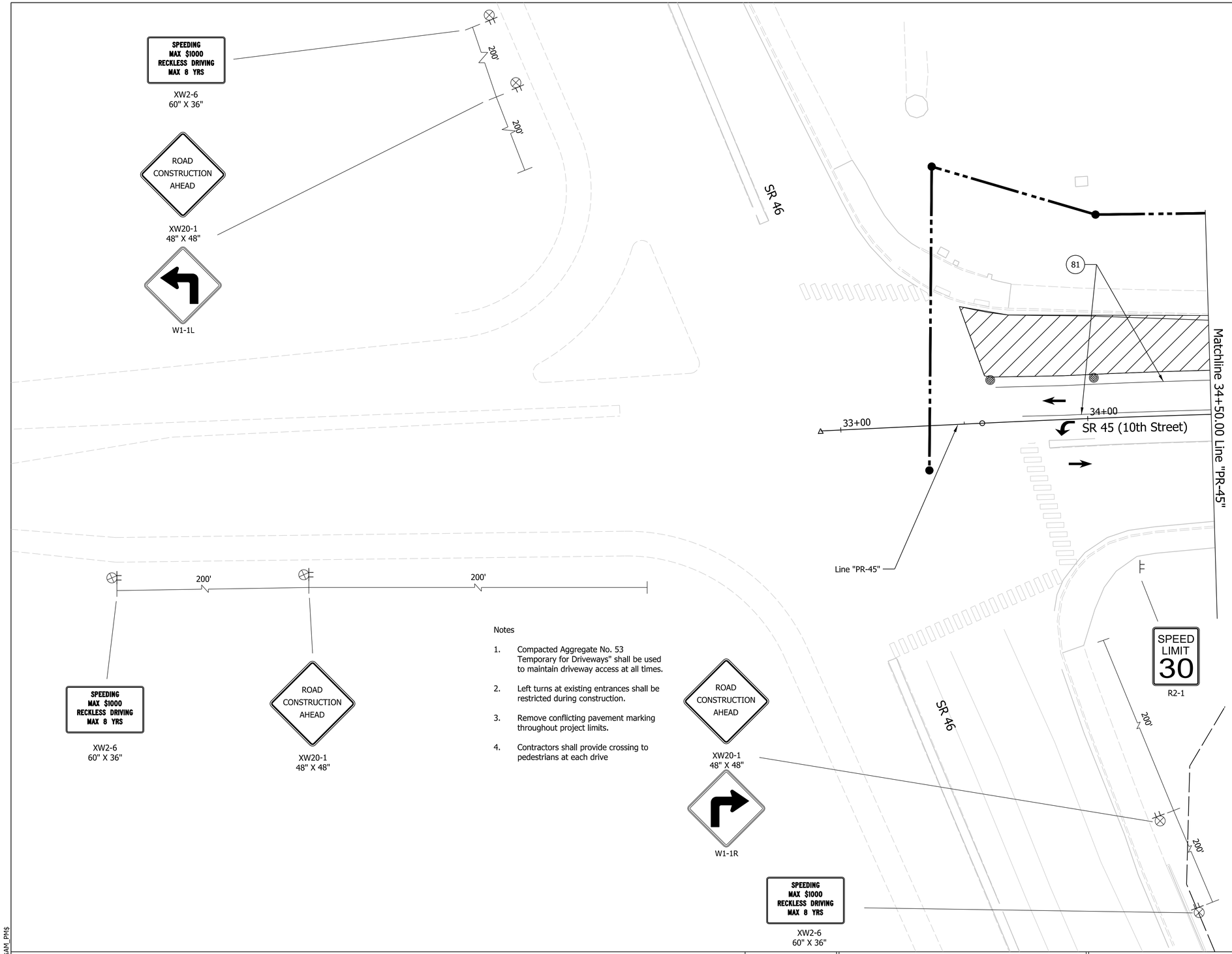

Notes

1. Compacted Aggregate No. 53 Temporary for Driveways" shall be used to maintain driveway access at all times.
2. Left turns at existing entrances shall be restricted during construction.
3. Remove conflicting pavement marking throughout project limits.
4. Contractors shall provide crossing to pedestrians at each drive

LEGEND:

- Construction Area
- Temporary Pavement
- Construction Warning Lights, A
- Temporary Plastic Barrier
- Temporary Concrete Barrier
- Direction of Traffic
- Temporary Channelizing Device
- Construction Sign
- 80 Temporary Pavement Marking, 4 in, Yellow
- 81 Temporary Pavement Marking, 4 in, White
- Existing R/W
- Proposed R/W

NOT FOR CONSTRUCTION

RECOMMENDED FOR APPROVAL _____ 3/20/2023
DESIGN ENGINEER DATE

DESIGNED: MM 3/20/2023 | DRAWN: MM 3/20/2023
CHECKED: KT 3/20/2023 | CHECKED: KT 3/20/2023

INDIANA DEPARTMENT OF TRANSPORTATION

MAINTENANCE OF TRAFFIC STAGE 2
Sta. 33+60 to 34.50 Line "PR-45"

SCALE	BRIDGE FILE
1"=20'	N/A
	DESIGNATION
	1800199

SURVEY BOOK	SHEETS		
Electronic	30	of	32
CONTRACT	PROJECT		
R-41465	1800199		

PLOT_DATE$ PLOT_TIME$ AM_PM
File: L:\INDOT\18070904-10\Draw\Sheets\Sht_MOT_Stg2_00.dgn
Model:$MODEL_NAME$

Notes

1. Compacted Aggregate No. 53 Temporary for Driveways" shall be used to maintain driveway access at all times.

2. Left turns at existing entrances shall be restricted during construction.

3. Remove conflicting pavement marking throughout project limits.

4. At least one entrance to Scholar's Quad shall remain fully open at all times.

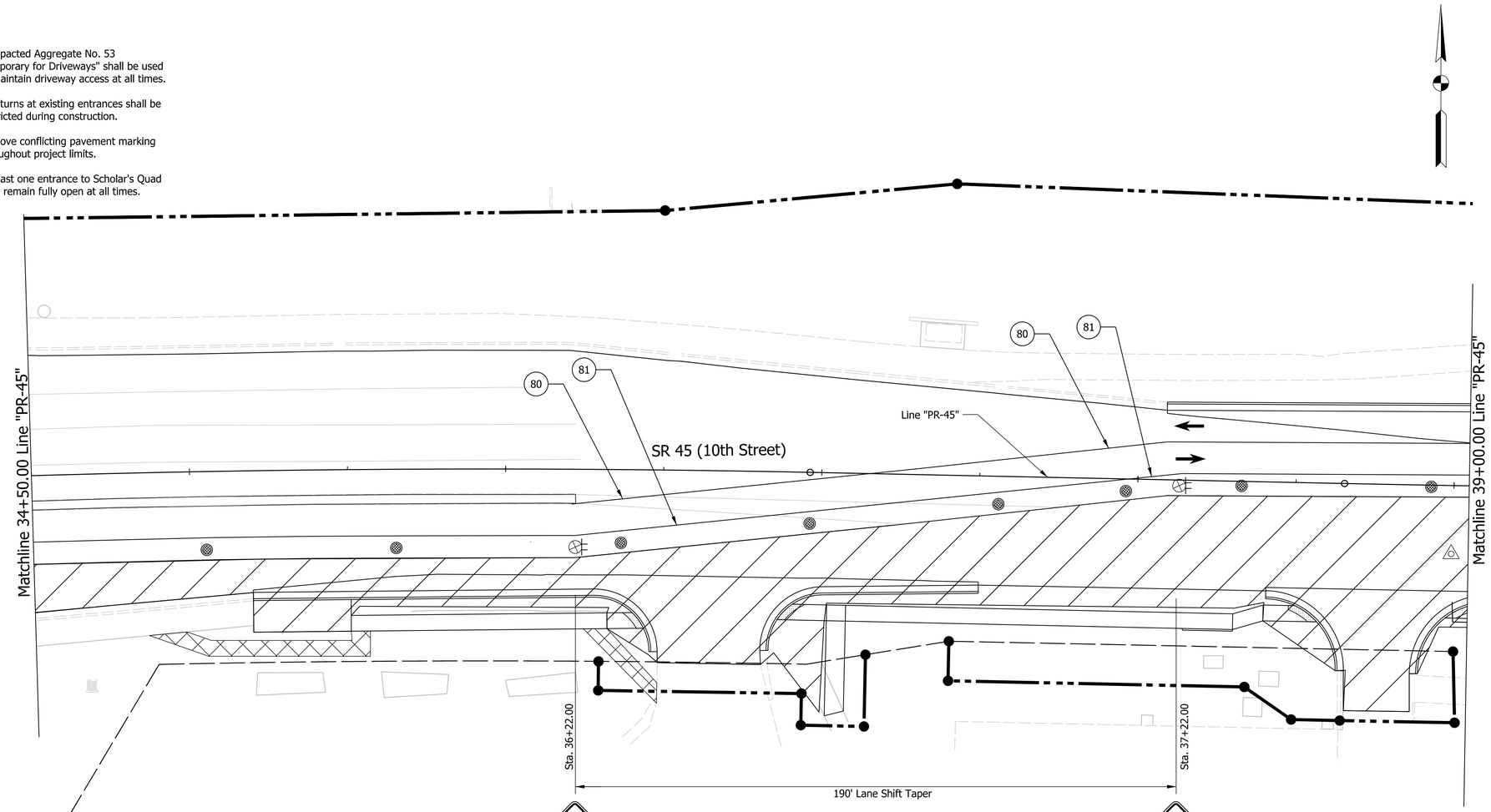

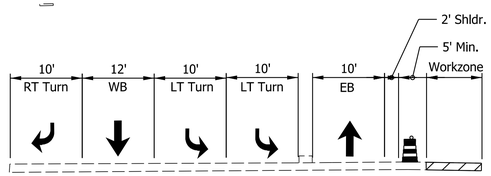

SR 45 TYPICAL SECTION

LEGEND:

- Construction Area
- Temporary Pavement
- Construction Warning Lights, A
- Temporary Plastic Barrier
- Temporary Concrete Barrier
- Direction of Traffic
- Temporary Channelizing Device
- Construction Sign
- 80 Temporary Pavement Marking, 4 in, Yellow
- 81 Temporary Pavement Marking, 4 in, White
- Existing R/W
- Proposed R/W

NOT FOR CONSTRUCTION

RECOMMENDED FOR APPROVAL — DESIGN ENGINEER — 3/20/2023 DATE

DESIGNED: MM 3/20/2023 | DRAWN: MM 3/20/2023

CHECKED: KT 3/20/2023 | CHECKED: KT 3/20/2023

INDIANA DEPARTMENT OF TRANSPORTATION

MAINTENANCE OF TRAFFIC STAGE 2
Sta. 33+60 to 39+00 Line "PR-45"

SCALE	BRIDGE FILE
1"=20'	N/A
	DESIGNATION
	1800199

SURVEY BOOK	SHEETS		
Electronic	31	of	32
CONTRACT	PROJECT		
R-41465	1800199		

PlotBy:PLOT_DATE$ PLOT_TIME$ AM_PM
File: L:\INDOT\18070904-10\Draw\Sheets\Sht_MOT_Stg2_01.dgn
Model:$MODEL_NAME$

Notes

1. Compacted Aggregate No. 53 Temporary for Driveways" shall be used to maintain driveway access at all times.
2. Left turns at existing entrances shall be restricted during construction.
3. Remove conflicting pavement marking throughout project limits.
4. At least one entrance to Scholar's Quad shall remain fully open at all times.

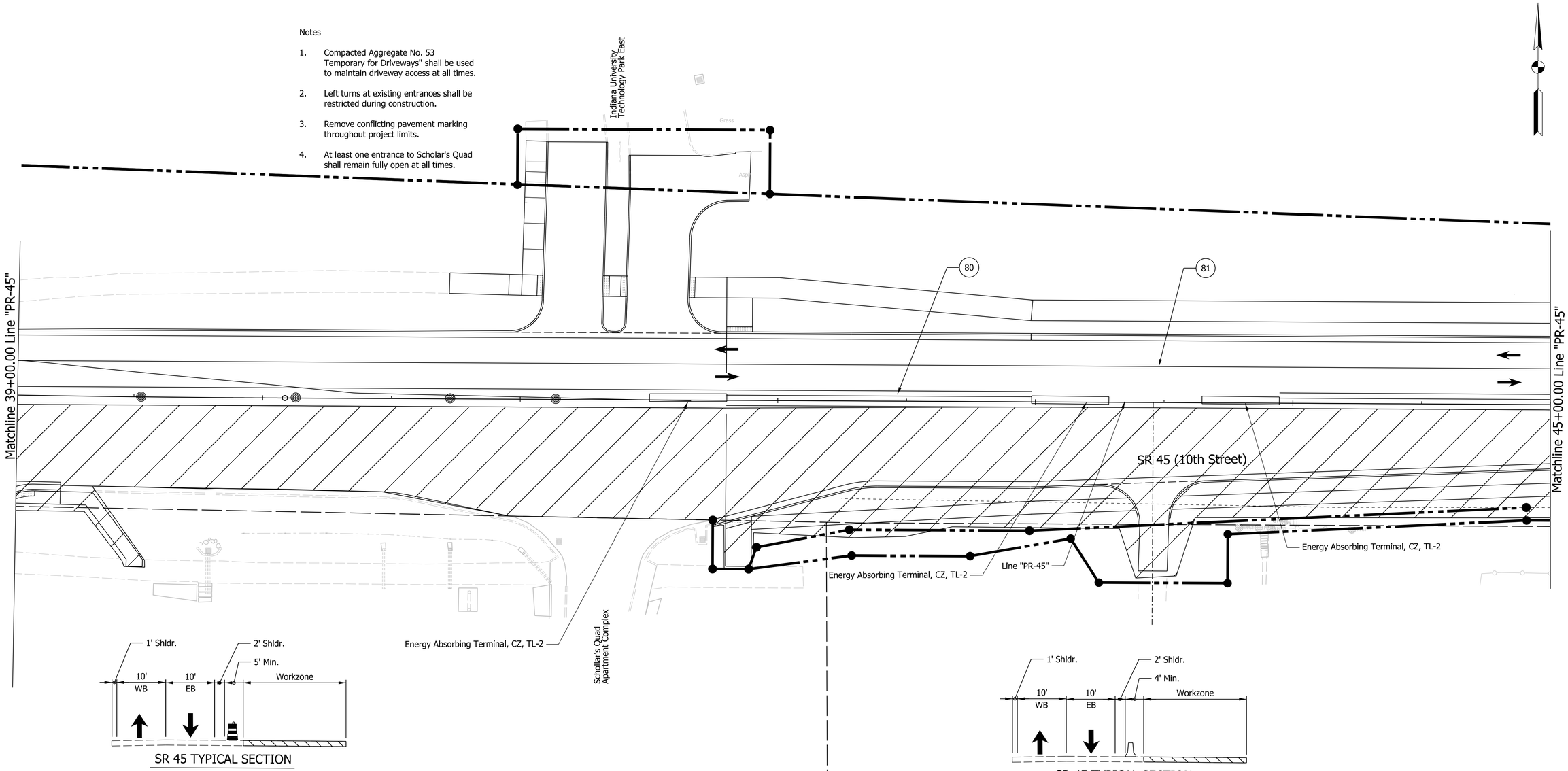

LEGEND:

- Construction Area
- Temporary Pavement
- Construction Warning Lights, A
- Temporary Plastic Barrier
- Temporary Concrete Barrier
- Direction of Traffic
- Temporary Channelizing Device
- Construction Sign
- (80) Temporary Pavement Marking, 4 in, Yellow
- (81) Temporary Pavement Marking, 4 in, White
- Existing R/W
- Proposed R/W

NOT FOR CONSTRUCTION

RECOMMENDED FOR APPROVAL — DESIGN ENGINEER — DATE 3/20/2023

DESIGNED: MM 3/20/2023 | DRAWN: MM 3/20/2023

CHECKED: KT 3/20/2023 | CHECKED: KT 3/20/2023

INDIANA DEPARTMENT OF TRANSPORTATION

MAINTENANCE OF TRAFFIC STAGE 2
Sta. 39+00 to 45+00 Line "PR-45"

SCALE	BRIDGE FILE
1"=20'	N/A
	DESIGNATION
	1800199

SURVEY BOOK	SHEETS
Electronic	32 of 32
CONTRACT	PROJECT
R-41465	1800199

PLOT_DATE$ PLOT_TIME$ AM_PM

File: L:\INDOT\18070904-10\Draw\Sheets\Sht_MOT_Stg2_02.dgn
Model:$MODEL_NAME$

Notes

1. Compacted Aggregate No. 53 Temporary for Driveways" shall be used to maintain driveway access at all times.

2. Left turns at existing entrances shall be restricted during construction.

3. Remove conflicting pavement marking throughout project limits.

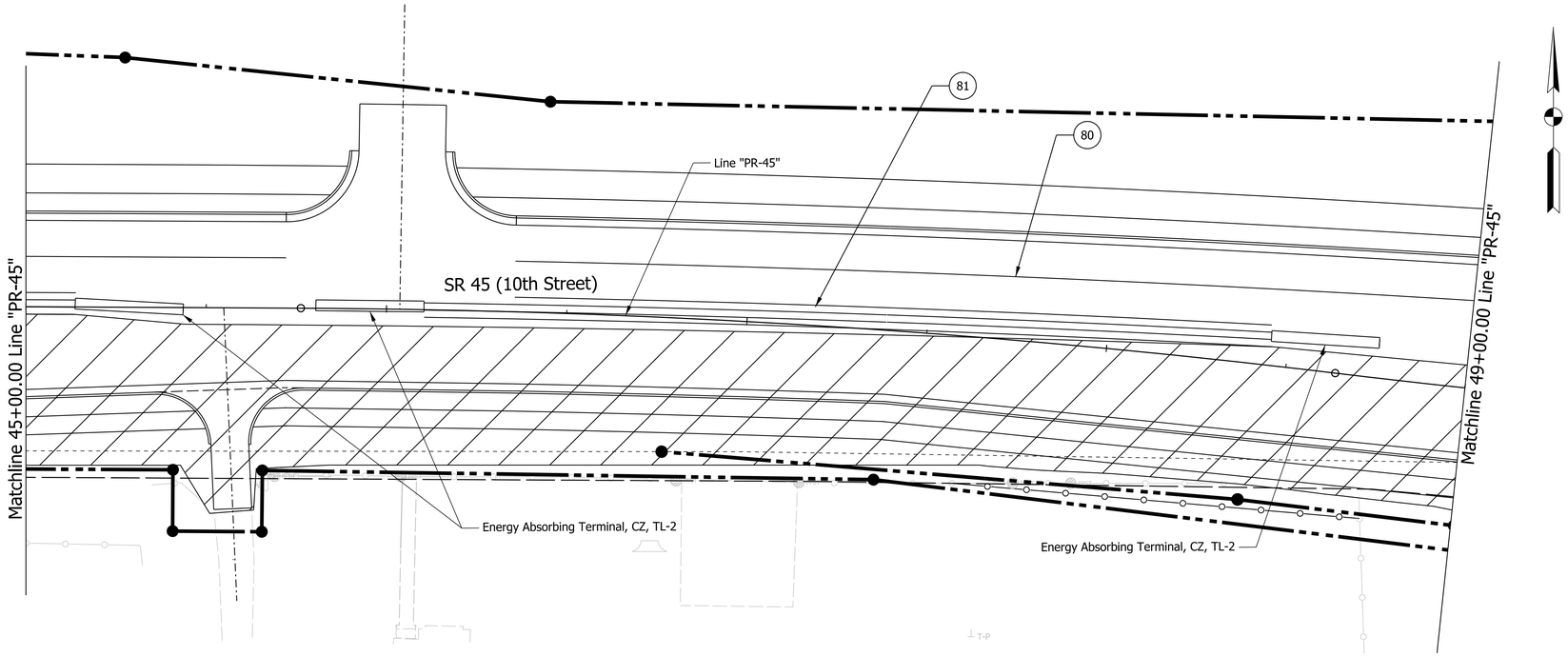

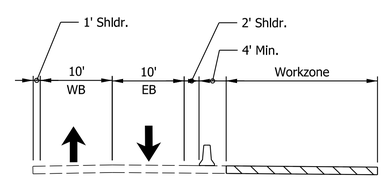

SR 45 TYPICAL SECTION

LEGEND:

- Construction Area
- Temporary Pavement
- Construction Warning Lights, A
- Temporary Plastic Barrier
- Temporary Concrete Barrier
- Direction of Traffic
- Temporary Channelizing Device
- Construction Sign
- 80 Temporary Pavement Marking, 4 in, Yellow
- 81 Temporary Pavement Marking, 4 in, White
- Existing R/W
- Proposed R/W

NOT FOR CONSTRUCTION

RECOMMENDED FOR APPROVAL — DESIGN ENGINEER — 3/20/2023 DATE

DESIGNED: MM 3/20/2023 | DRAWN: MM 3/20/2023

CHECKED: KT 3/20/2023 | CHECKED: KT 3/20/2023

INDIANA DEPARTMENT OF TRANSPORTATION

MAINTENANCE OF TRAFFIC STAGE 2
Sta. 45+00 to 49+00 Line "PR-45"

SCALE	BRIDGE FILE
1"=20'	N/A
	DESIGNATION
	1800199

SURVEY BOOK	SHEETS
Electronic	33 of 32
CONTRACT	PROJECT
R-41465	1800199

PlotSty: PLOT_DATE$ TIME$ AM_PM

File: L:\INDOT\18070904-10\Draw\Sheets\Sht_MOT_Stg2_03.dgn
Model:$MODEL_NAME$

Notes

1. Compacted Aggregate No. 53 Temporary for Driveways" shall be used to maintain driveway access at all times.
2. Left turns at existing entrances shall be restricted during construction.
3. Remove conflicting pavement marking throughout project limits.

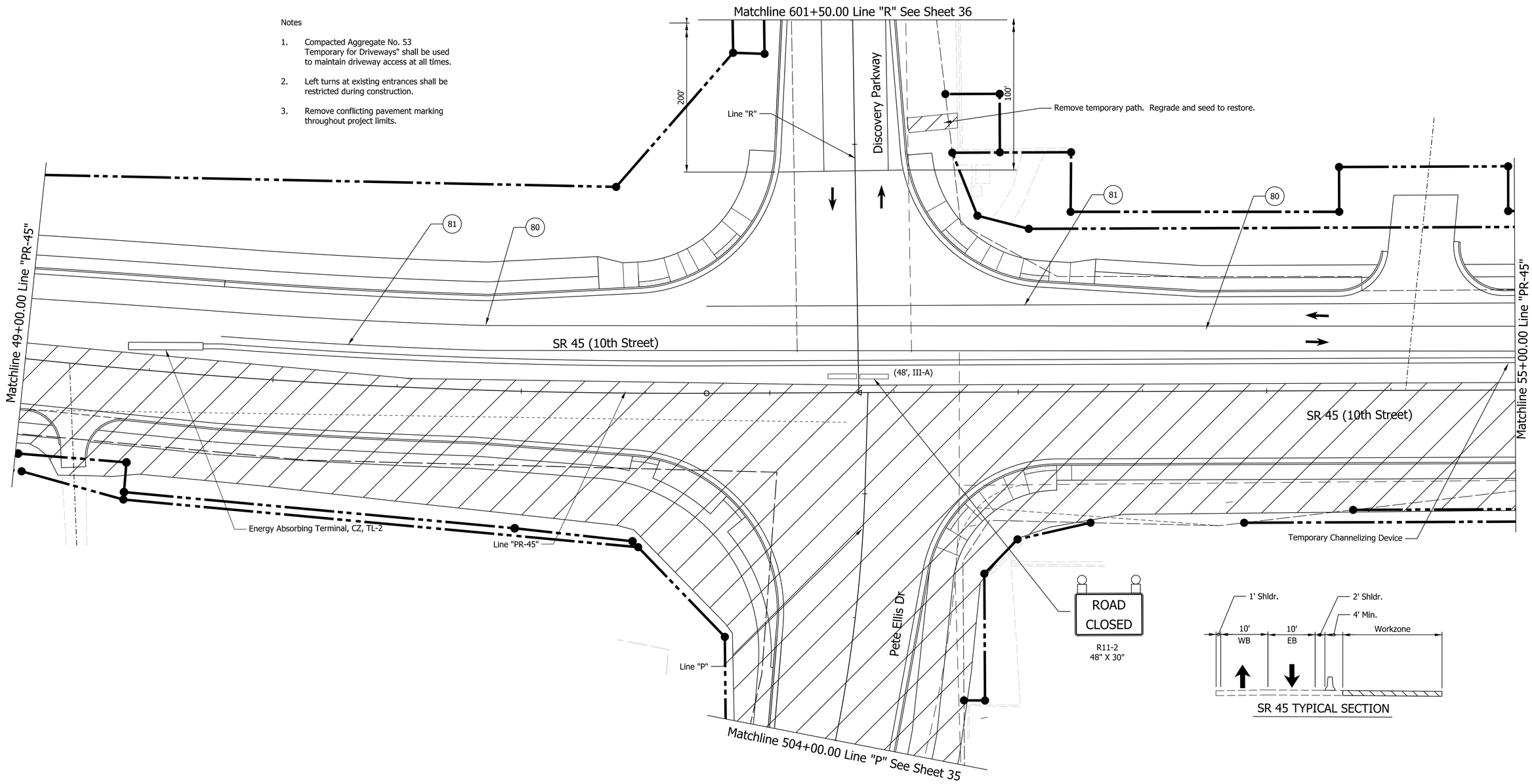

SR 45 TYPICAL SECTION

LEGEND:

- Construction Area
- Temporary Pavement
- Construction Warning Lights, A
- Temporary Plastic Barrier
- Temporary Concrete Barrier
- Direction of Traffic
- Temporary Channelizing Device
- Construction Sign
- 80 Temporary Pavement Marking, 4 in, Yellow
- 81 Temporary Pavement Marking, 4 in, White
- Existing R/W
- Proposed R/W

NOT FOR CONSTRUCTION

RECOMMENDED FOR APPROVAL — DESIGN ENGINEER — 3/20/2023 DATE

DESIGNED: MM 3/20/2023 | DRAWN: MM 3/20/2023

CHECKED: KT 3/20/2023 | CHECKED: KT 3/20/2023

INDIANA DEPARTMENT OF TRANSPORTATION

MAINTENANCE OF TRAFFIC STAGE 2
Sta. 49+00 to 55+00 Line "PR-45"

SCALE	BRIDGE FILE
1"=20	N/A
	DESIGNATION
	1800199
SURVEY BOOK	SHEETS
Electronic	34 of 32
CONTRACT	PROJECT
R-41465	1800199

PLOTSCALE=1 PLOTDATE=$DATE$ PLOTTIME=$TIME$ AM_PM

File: L:\INDOT\18070904-10\Draw\Sheets\Sht_MOT_Stg2_04.dgn
Model:$MODEL_NAME$

Notes

1. Compacted Aggregate No. 53 Temporary for Driveways" shall be used to maintain driveway access at all times.
2. Left turns at existing entrances shall be restricted during construction.
3. Remove conflicting pavement marking throughout project limits.

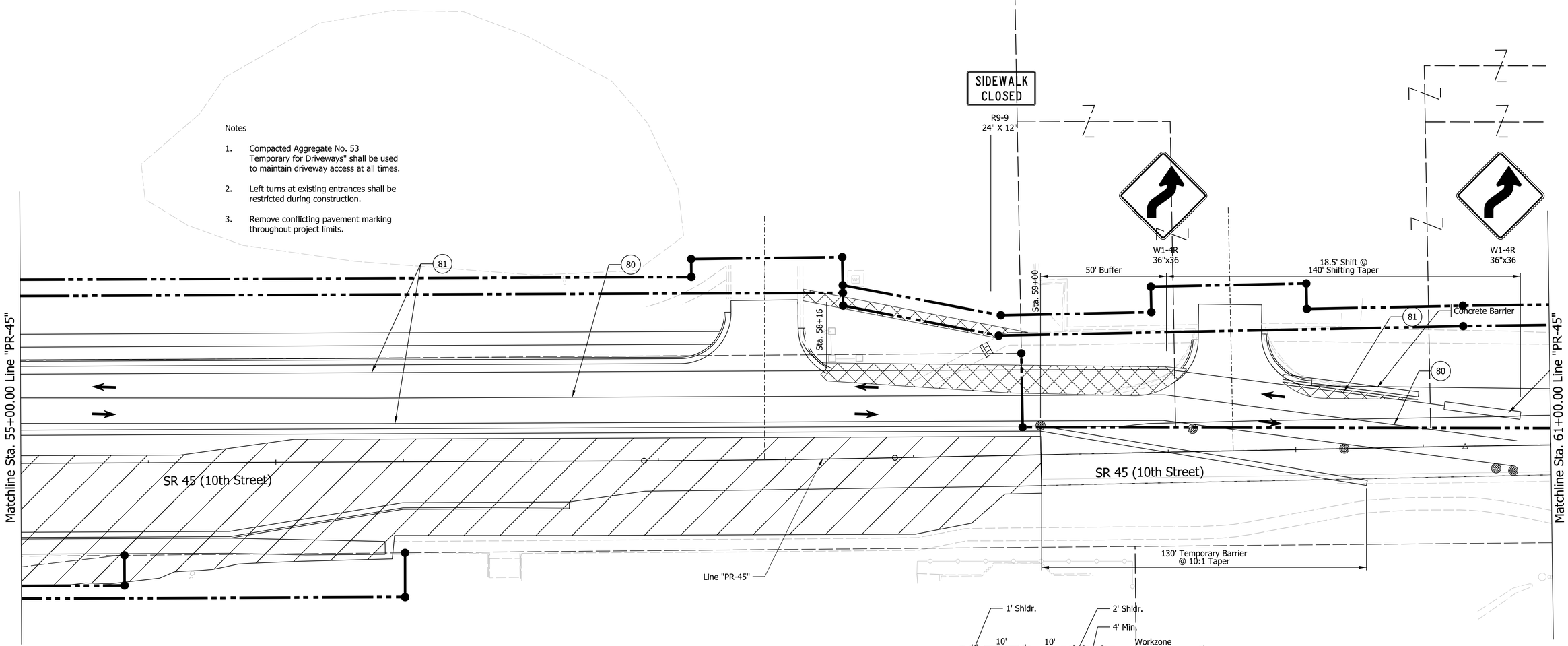

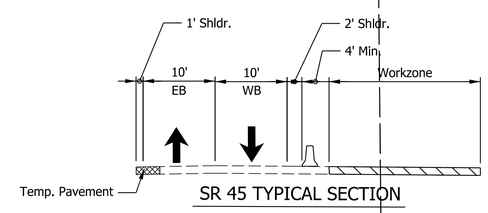

SR 45 TYPICAL SECTION

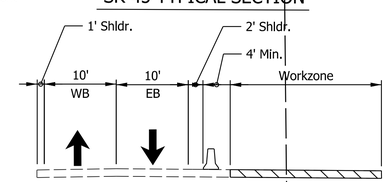

SR 45 TYPICAL SECTION

LEGEND:

- Construction Area
- Temporary Pavement
- Construction Warning Lights, A
- Temporary Plastic Barrier
- Temporary Concrete Barrier
- Direction of Traffic
- Temporary Channelizing Device
- Construction Sign
- 80 Temporary Pavement Marking, 4 in, Yellow
- 81 Temporary Pavement Marking, 4 in, White
- Existing R/W
- Proposed R/W

NOT FOR CONSTRUCTION

RECOMMENDED FOR APPROVAL		3/20/2023	
DESIGN ENGINEER		DATE	
DESIGNED: MM	3/20/2023	DRAWN: MM	3/20/2023
CHECKED: KT	3/20/2023	CHECKED: KT	3/20/2023

INDIANA DEPARTMENT OF TRANSPORTATION

MAINTENANCE OF TRAFFIC STAGE 2
Sta. 55+00 to 61+00 Line "PR-45"

SCALE	BRIDGE FILE
1"=20'	N/A
	DESIGNATION
	1800199
SURVEY BOOK	SHEETS
Electronic	35 of 32
CONTRACT	PROJECT
R-41465	1800199

PlotSPLOT_DATE$ PLOT_TIME$ AM_PM

File: L:\INDOT\18070904-10\Draw\Sheets\Sht_MOT_Stg2_05.dgn
Model:$MODEL_NAME$

Notes

1. Compacted Aggregate No. 53 Temporary for Driveways" shall be used to maintain driveway access at all times.
2. Left turns at existing entrances shall be restricted during construction.
3. Remove conflicting pavement marking throughout project limits.

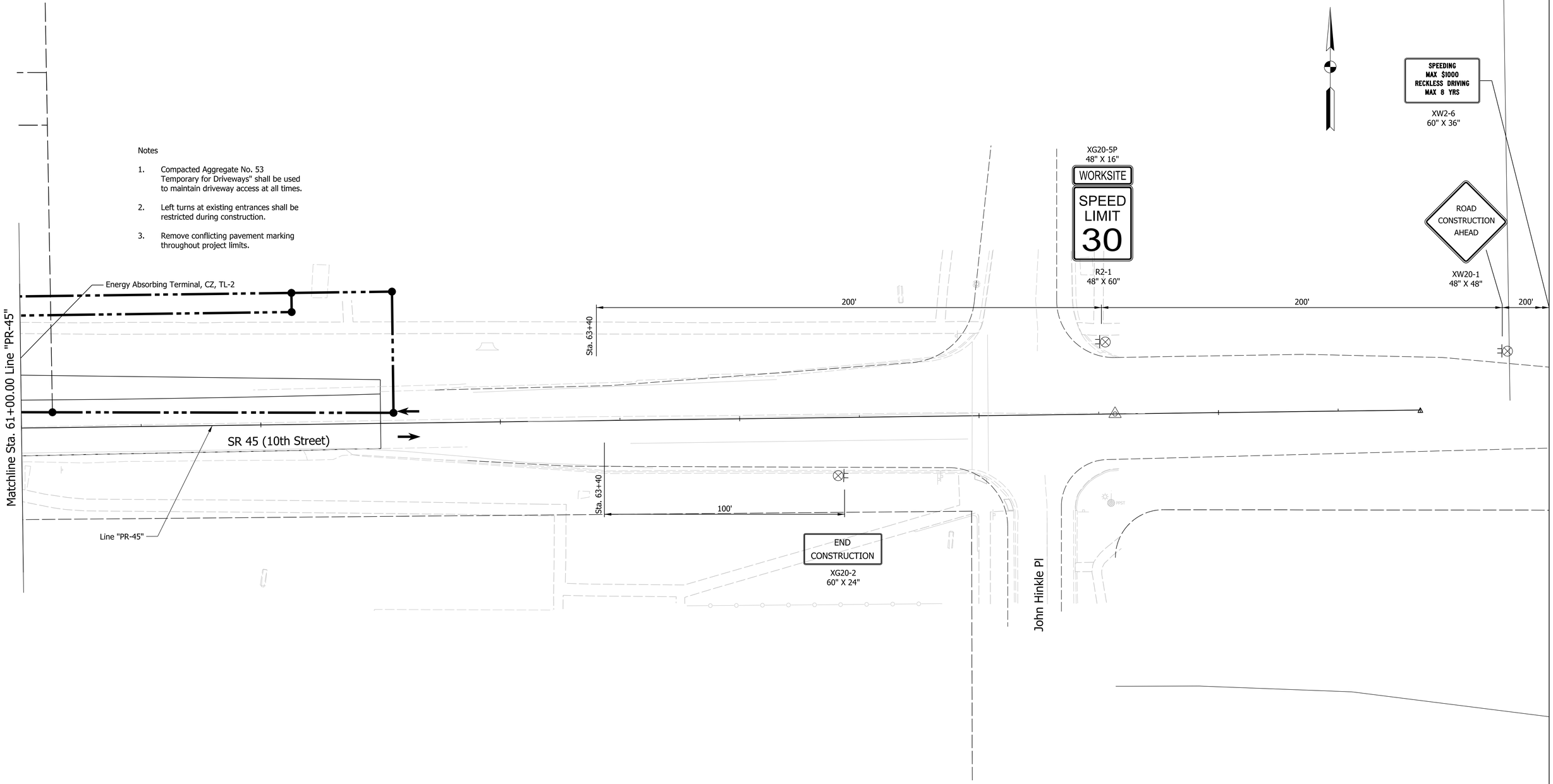

LEGEND:

- Construction Area
- Temporary Pavement
- Construction Warning Lights, A
- Temporary Plastic Barrier
- Temporary Concrete Barrier
- Direction of Traffic
- Temporary Channelizing Device
- Construction Sign
- 80 Temporary Pavement Marking, 4 in, Yellow
- 81 Temporary Pavement Marking, 4 in, White
- Existing R/W
- Proposed R/W

NOT FOR CONSTRUCTION

RECOMMENDED FOR APPROVAL 3/20/2023
DESIGN ENGINEER DATE

DESIGNED: MM 3/20/2023 DRAWN: MM 3/20/2023
CHECKED: KT 3/20/2023 CHECKED: KT 3/20/2023

INDIANA DEPARTMENT OF TRANSPORTATION

MAINTENANCE OF TRAFFIC STAGE 2
Sta. 61+00 to 67+00 Line "PR-45"

SCALE	BRIDGE FILE
1"=20'	N/A
	DESIGNATION
	1800199
SURVEY BOOK	SHEETS
Electronic	36 of 32
CONTRACT	PROJECT
R-41465	1800199

PlotBy$PLOT_DATE$ $PLOT_TIME$ AM_PM
File: L:\INDOT\18070904-10\Draw\Sheets\Sht_MOT_Stg2_06.dgn
Model:$MODEL_NAME$

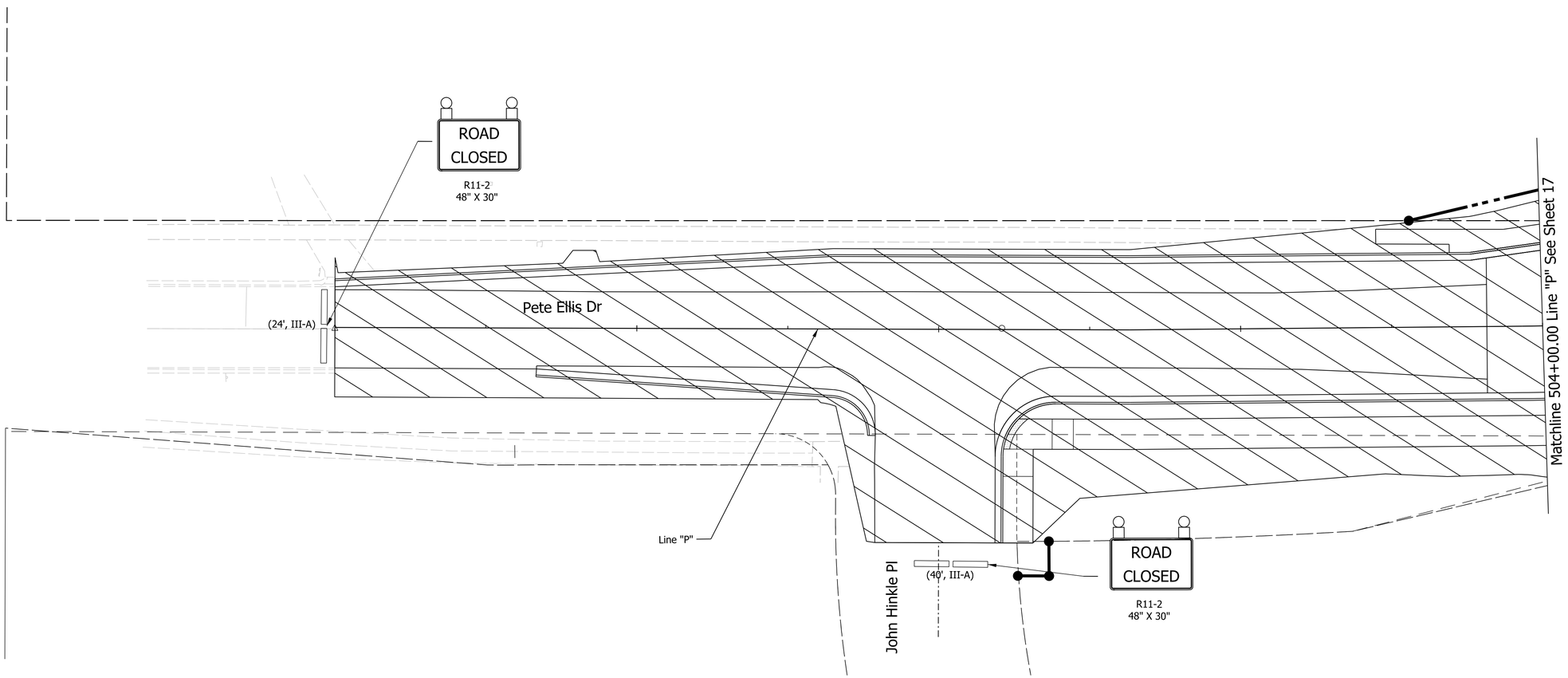

LEGEND:

- Construction Area
- Temporary Pavement
- Construction Warning Lights, A
- Temporary Plastic Barrier
- Temporary Concrete Barrier
- Direction of Traffic
- Temporary Channelizing Device
- Construction Sign
- 80 Temporary Pavement Marking, 4 in, Yellow
- 81 Temporary Pavement Marking, 4 in, White
- Existing R/W
- Proposed R/W

NOT FOR CONSTRUCTION

RECOMMENDED FOR APPROVAL 3/20/2023
DESIGN ENGINEER DATE

DESIGNED: MM 3/20/2023 DRAWN: MM 3/20/2023
CHECKED: KT 3/20/2023 CHECKED: KT 3/20/2023

INDIANA DEPARTMENT OF TRANSPORTATION

MAINTENANCE OF TRAFFIC STAGE 2
Sta. 500+00 to 504+00 Line "P"

SCALE	BRIDGE FILE
1"=20'	N/A
	DESIGNATION
	1800199
SURVEY BOOK	SHEETS
Electronic	37 of 32
CONTRACT	PROJECT
R-41465	1800199

PlotBy:PLOT_DATE$ PLOT_TIME$ AM_PM
File: L:\INDOT\18070904-10\Draw\Sheets\Sht_MOT_Stg2_07.dgn
Model:$MODEL_NAME$

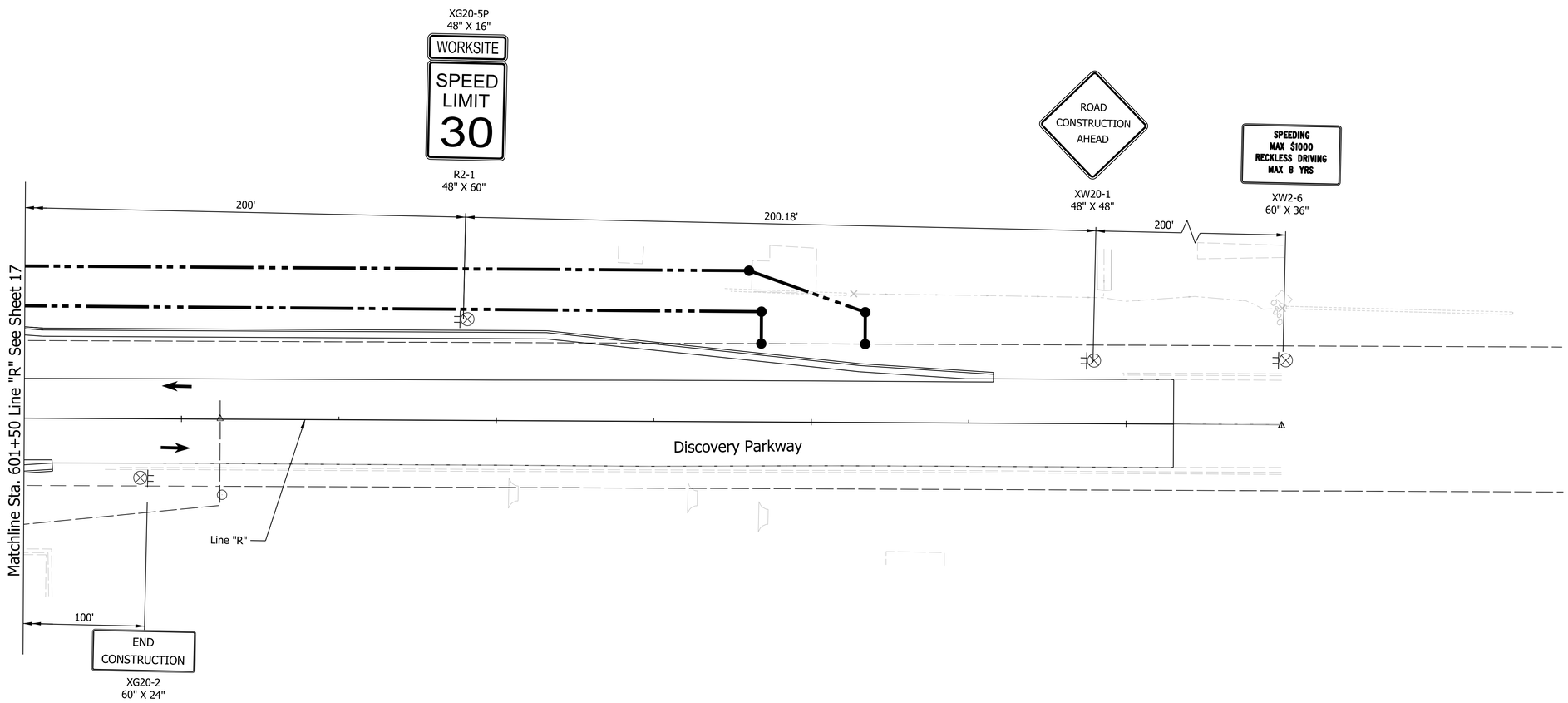

LEGEND:

- Construction Area
- Temporary Pavement
- Construction Warning Lights, A
- Temporary Plastic Barrier
- Temporary Concrete Barrier
- Direction of Traffic
- Temporary Channelizing Device
- Construction Sign
- 80 Temporary Pavement Marking, 4 in, Yellow
- 81 Temporary Pavement Marking, 4 in, White
- Existing R/W
- Proposed R/W

NOT FOR CONSTRUCTION

RECOMMENDED FOR APPROVAL — DESIGN ENGINEER — 3/20/2023 DATE

DESIGNED: MM 3/20/2023 | DRAWN: MM 3/20/2023

CHECKED: KT 3/20/2023 | CHECKED: KT 3/20/2023

INDIANA DEPARTMENT OF TRANSPORTATION

MAINTENANCE OF TRAFFIC STAGE 2
Sta. 601+50 to 605+50 Line "R"

SCALE	BRIDGE FILE
1"=20'	N/A
	DESIGNATION
	1800199

SURVEY BOOK	SHEETS		
Electronic	38	of	32
CONTRACT	PROJECT		
R-41465	1800199		

Plot Scale: 1:1 Plot Date: $DATE$ Plot Time: $TIME$ AM_PM
File: L:\INDOT\18070904-10\Draw\Sheets\Sht_MOT_Stg2_08.dgn
Model: $MODEL_NAME$

Note to Reviewer:

Further information regarding bus stops will be provided at a later date. Coordination is ongoing with Bloomington Transit.

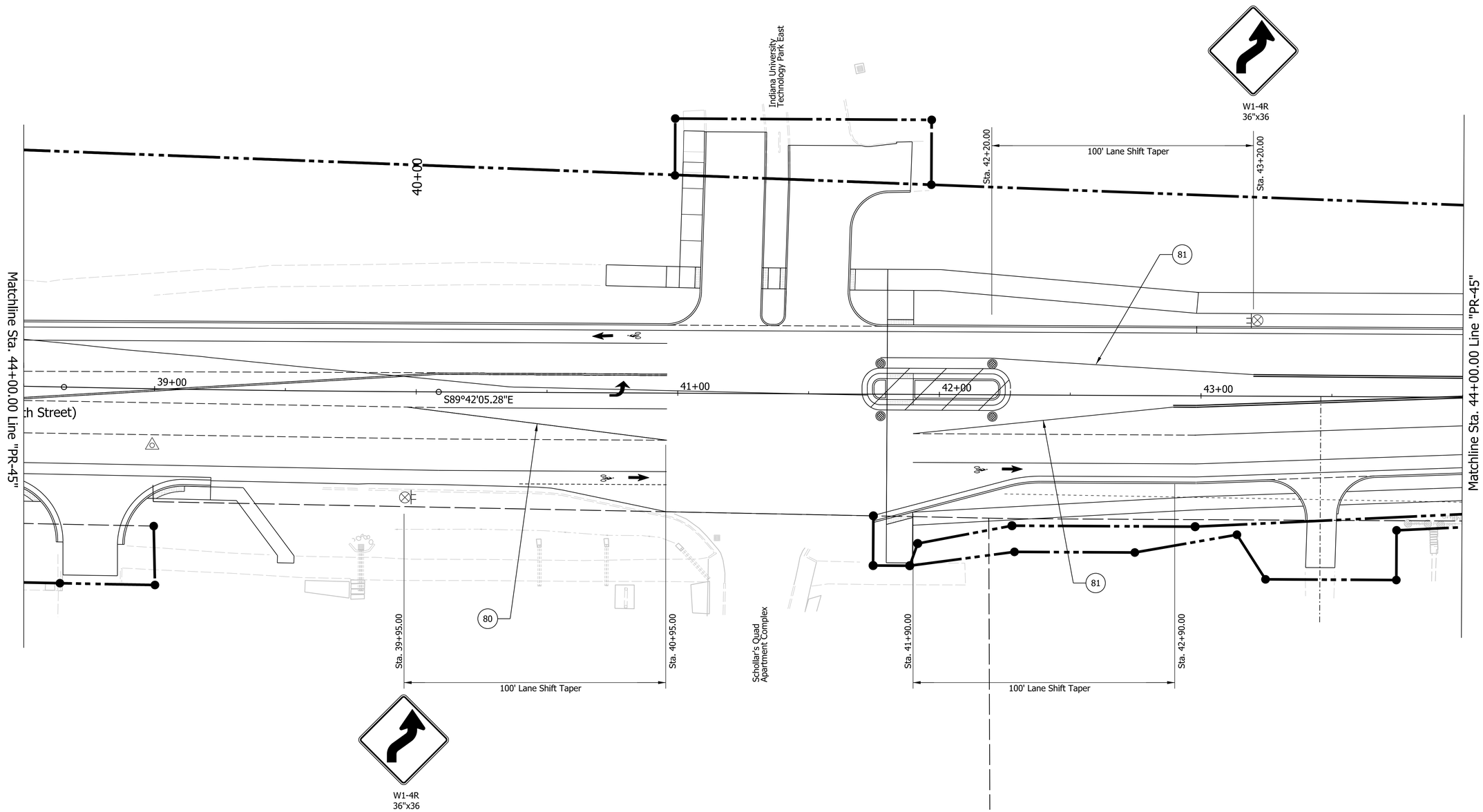

LEGEND:

- Construction Area
- Temporary Pavement
- Construction Warning Lights, A
- Temporary Plastic Barrier
- Temporary Concrete Barrier
- Direction of Traffic
- Temporary Channelizing Device
- Construction Sign
- (80) Temporary Pavement Marking, 4 in, Yellow
- (81) Temporary Pavement Marking, 4 in, White
- Existing R/W
- Proposed R/W

NOT FOR CONSTRUCTION

RECOMMENDED FOR APPROVAL — DESIGN ENGINEER — 3/20/2023 DATE

DESIGNED: MM 3/20/2023 | DRAWN: MM 3/20/2023

CHECKED: KT 3/20/2023 | CHECKED: KT 3/20/2023

INDIANA DEPARTMENT OF TRANSPORTATION

MAINTENANCE OF TRAFFIC STAGE 3A
Sta. 33+60 to 45+00 Line "PR-45"

SCALE	BRIDGE FILE
1"=40'	N/A
	DESIGNATION
	1800199
SURVEY BOOK	SHEETS
Electronic	39 of 32
CONTRACT	PROJECT
R-41465	1800199

Plot: PLOT_DATE$ PLOT_TIME$ AM_PM

File: L:\INDOT\18070904-10\Draw\Sheets\Sht_MOT_Stg3a_00.dgn
Model: $MODEL_NAME$

Note to Reviewer:

Further information regarding bus stops will be provided at a later date. Coordination is ongoing with Bloomington Transit

END CONSTRUCTION

XG20-2
60" X 24"

150'

Temporary Path

60+00

Sta. 55+00.00 Line "PR-A"

Matchline Sta. 61+00.00 Line "PR-45"

56+00

57+00

58+00

59+00

N88°49'37.72"E

N89°15'48.97"E

SR 45 (10th Street)

80

81

Line "PR-45"

200'

200'

Sta. 59+00

5' Shift @
40' Shifting Taper

Sta. 59+40

1' Shldr.

5' Min.

1' Shldr.

Workzone

10'
WB

10'
EB

SR 45 TYPICAL SECTION

Temp. Pavement

ROAD CONSTRUCTION AHEAD

XW20-1
48" X 48"

200'

SPEEDING
MAX $1000
RECKLESS DRIVING
MAX 8 YRS

XW2-6
60" X 36"

XG20-5P
48" X 16"

WORKSITE

SPEED LIMIT 30

R2-1
48" X 60"

W1-4R
36"x36

W1-4R
36"x36

LEGEND:

- Construction Area
- Temporary Pavement
- Construction Warning Lights, A
- Temporary Plastic Barrier
- Temporary Concrete Barrier
- Direction of Traffic
- Temporary Channelizing Device
- Construction Sign
- (80) Temporary Pavement Marking, 4 in, Yellow
- (81) Temporary Pavement Marking, 4 in, White
- Existing R/W
- Proposed R/W

NOT FOR CONSTRUCTION

RECOMMENDED FOR APPROVAL — DESIGN ENGINEER — 3/20/2023 DATE

DESIGNED: MM 3/20/2023 | DRAWN: MM 3/20/2023

CHECKED: KT 3/20/2023 | CHECKED: KT 3/20/2023

INDIANA DEPARTMENT OF TRANSPORTATION

MAINTENANCE OF TRAFFIC STAGE 3A
Sta. 55+00 to 61+00 Line "PR-45"

SCALE	BRIDGE FILE
1"=20'	N/A
	DESIGNATION
	1800199
SURVEY BOOK	SHEETS
Electronic	40 of 32
CONTRACT	PROJECT
R-41465	1800199

PlotSPLOT_DATE$ PLOT_TIME$ AM_PM

File: L:\INDOT\18070904-10\Draw\Sheets\Sht_MOT_Stg3a_01.dgn
Model:$MODEL_NAME$

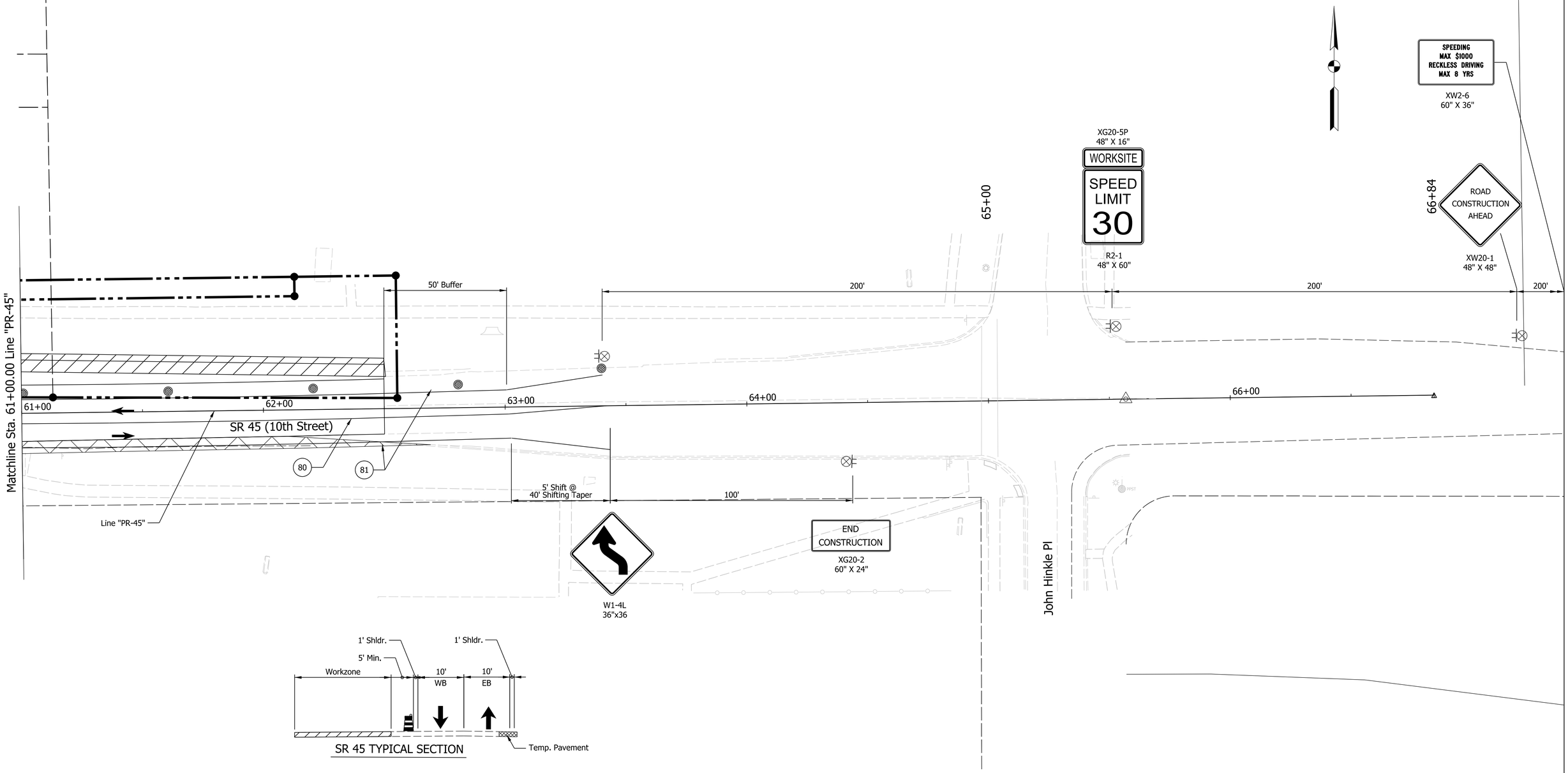

LEGEND:

- Construction Area
- Temporary Pavement
- Construction Warning Lights, A
- Temporary Plastic Barrier
- Temporary Concrete Barrier
- Direction of Traffic
- Temporary Channelizing Device
- Construction Sign
- 80 Temporary Pavement Marking, 4 in, Yellow
- 81 Temporary Pavement Marking, 4 in, White
- Existing R/W
- Proposed R/W

NOT FOR CONSTRUCTION

RECOMMENDED FOR APPROVAL — DESIGN ENGINEER — 3/20/2023 DATE

DESIGNED: MM	3/20/2023	DRAWN: MM	3/20/2023
CHECKED: KT	3/20/2023	CHECKED: KT	3/20/2023

INDIANA DEPARTMENT OF TRANSPORTATION

MAINTENANCE OF TRAFFIC STAGE 3A
Sta. 61+00 to 67+00 Line "PR-45"

SCALE	BRIDGE FILE
1"=20'	N/A
	DESIGNATION
	1800199

SURVEY BOOK	SHEETS
Electronic	41 of 32
CONTRACT	PROJECT
R-41465	1800199

PlotSCALE=1:1 PLOT_DATE=$DATE$ PLOT_TIME=$TIME$ AM_PM
File: L:\INDOT\18070904-10\Draw\Sheets\Sht_MOT_Stg3a_02.dgn
Model:$MODEL_NAME$

Note:

1. Mill and Overlay to be constucted with the use of Traffic Control Flaggers. Constuction shall only be permitted during night/weekend hours. Contractor shall follow Standard E 801-TCFO Traffic Control Flagger Operationfor construction.

2. Contractor is responsible for the removal of temporary pavement laid in prior stage(s) before the succeeding stage construction begins.

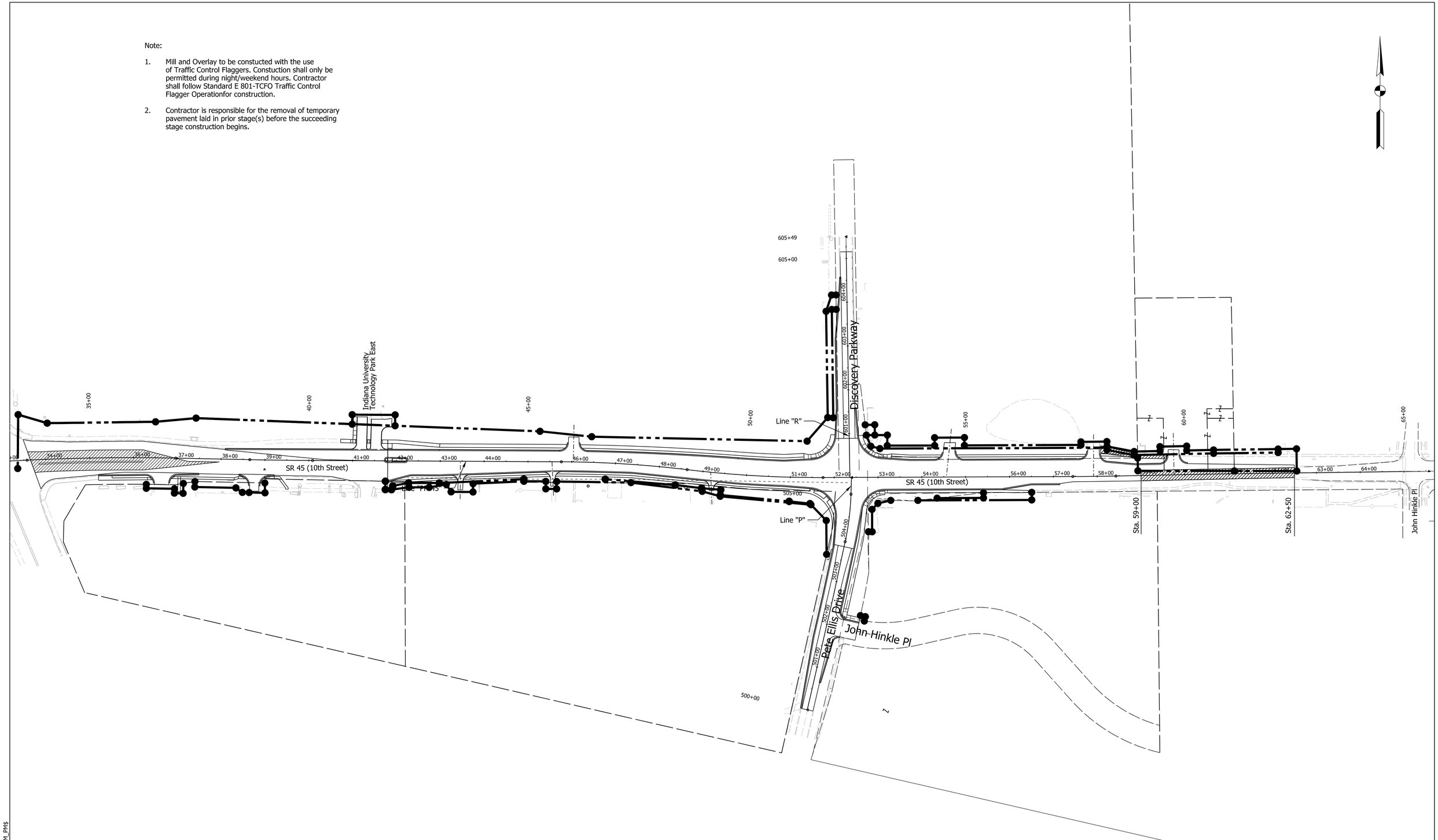

LEGEND:

- Construction Area
- Temporary Pavement
- Construction Warning Lights, A
- Temporary Plastic Barrier
- Temporary Concrete Barrier
- Direction of Traffic
- Temporary Channelizing Device
- Construction Sign
- 80 Temporary Pavement Marking, 4 in, Yellow
- 81 Temporary Pavement Marking, 4 in, White
- Existing R/W
- Proposed R/W

NOT FOR CONSTRUCTION

RECOMMENDED FOR APPROVAL — DESIGN ENGINEER — DATE 3/20/2023

DESIGNED: MM 3/20/2023 | DRAWN: MM 3/20/2023

CHECKED: KT 3/20/2023 | CHECKED: KT 3/20/2023

INDIANA DEPARTMENT OF TRANSPORTATION

MAINTENANCE OF TRAFFIC STAGE 3B

SCALE	BRIDGE FILE
1"=100'	N/A
	DESIGNATION
	1800199
SURVEY BOOK	SHEETS
Electronic	42 of 32
CONTRACT	PROJECT
R-41465	1800199

File: L:\INDOT\18070904-10\Draw\Sheets\Sht_MOT_Stg3b_01.dgn
Model:$MODEL_NAME$
Plot:$PLOT_DATE$ $PLOT_TIME$ AM_PM

SR 45 & Pete Ellis Dr./Discovery Pkwy.
Intersection Improvements and Added Lanes
CE Level 4

APPENDIX C: EARLY COORDINATION

INDIANA DEPARTMENT OF TRANSPORTATION

100 North Senate Avenue
Room N642
Indianapolis, Indiana 46204

PHONE: (317) 232-5113
FAX: (317) 233-4929

Eric Holcomb, Governor
Joe McGuinness, Commissioner

August 5, 2019

Sample Early Coordination Letter

{See Attached List}

Re: State Road 45 Intersection Improvement at Pete Ellis Drive/North Range Road
Bloomington, Monroe County, Indiana
INDOT Des No.: 1800199
CMT Project No.: 18070904-10

Dear Interested Party:

The Indiana Department of Transportation (INDOT) and Federal Highway Administration (FHWA) intend to proceed with a project involving State Road 45 (SR 45) and Pete Ellis Drive/North Range Road in Bloomington, Monroe County, Indiana. This letter is part of the early coordination phase of the environmental review process. We are requesting comments from your area of expertise regarding any possible environmental effects associated with this project. **Please use the above designation numbers and description in your reply.** We will incorporate your comments into a study of the project's environmental impacts. This is a state sponsored project receiving federal funds.

Project Description

This project is located at the SR 45 (10th Street) and Pete Ellis Drive/North Range Road intersection in Bloomington, Monroe County, Indiana. The project area includes SR 45 from 0.1 mile east of the intersection to 0.1 mile west of the intersection and also includes Pete Ellis Drive from 0.1 mile south of the intersection and North Range Road from 0.1 mile north of the intersection. The project is located in Section 35, Township 9 North, and Range 1 West of the U.S. Geological Survey (USGS) Unionville, Indiana Quadrangle.

The existing intersection is four-legged with an existing traffic signal. SR 45, an Urban Minor Arterial, has a shared through/left-turn lane and an exclusive right-turn lane on both the eastbound and westbound approaches. The northbound approach, Pete Ellis Drive, a Minor Collector, has an exclusive right-turn lane and a shared through/left-turn lane. The southbound approach, North Range Road, has an exclusive left-turn lane and a shared through/right-turn lane. A multi-use path is located west of the intersection along the north side of SR 45. Sidewalks are located south of the intersection along both sides of Pete Ellis Drive and east of the intersection along both sides of SR 45. There are existing bus stops approximately 300 feet to the east of the intersection on both sides of SR 45.

The proposed improvements would include providing exclusive left-turn and right-turn lanes on all approaches at the intersection. The improvements would involve widening portions of SR 45, Pete Ellis Drive, and North Range Road. Sidewalk and multi-use path reconstruction around the intersection may also be necessary.

New right-of-way acquisition is anticipated. A total of three parcels are expected to be impacted by the right-of-way acquisition. The project is anticipated to require approximately 1.2 acres of permanent right-of-way and approximately 0.2 acre of temporary right-of-way. Proposed maximum depth of excavation for the project would be approximately 20 feet for traffic signal pole foundations. The maintenance of traffic will either involve phased construction along SR 45

with a detour route for Pete Ellis Drive/North Range Road or phased construction along SR 45 and Pete Ellis Drive/North Range Road, which would maintain one lane of traffic in each direction. SR 45 is expected to remain open to traffic throughout construction.

Land use in the vicinity of the project is commercial and residential. A waters and wetlands determination identifying any water resources that may be present within the study area will be performed. The National Wetland Inventory Database indicates the presence of a freshwater pond adjacent to the eastern portion of the project area. A Department of Natural Resources Construction in a Floodway Permit is not anticipated to be required for this project. 401/404 Permits may be required for this project. This project qualifies for the application of the USFWS range-wide programmatic informal consultation for the Indiana bat and Northern long-eared bat and project information will be submitted through USFWS's Information for Planning and Consultation (IPaC) separately. A maximum of 1.0 acre of tree removal may be required for this project.

The INDOT Cultural Resources Office will investigate the areas of additional right-of-way for archaeological and historic resources for compliance with Section 106 compliance. The results of this investigation will be forwarded to the State Historic Preservation Officer for review and concurrence. The Hinkle-Garton Farmstead National Register Historic Site and the Garton Farm Historic District are adjacent to the project area, located in the southwest quadrant of the intersection. INDOT will ensure compliance with Section 106 of the National Historic Preservation Act of 1966.

Should we not receive a response **within thirty (30) calendar days** from the date of this letter, it will be assumed that your agency feels that there will be no adverse effects incurred as a result of the proposed project. However, should you find that an extension to the response time is necessary; a reasonable amount may be granted upon request.

If you have any questions or concerns regarding this matter, please feel free to contact Karlei Metcalf at kmetcalf@indot.in.gov or contact me at (317) 492-9166 or via email at creiter@cmtengr.com. Thank you in advance for your input.

Sincerely,

Crawford, Murphy & Tilly, Inc.

Cassie Reiter

Cassie Reiter
Project Manager

Attachments-
Maps (Location, Aerial, USGS Topographic)

Note: Duplicate mapping and photographs were included in the Early Coordination Packet, but were intentionally removed. Please see Appendix B for maps and photographs.

The following agencies received Early Coordination Letters sent August 5, 2019:

Robin McWilliams
Field Supervisor
U.S. Fish and Wildlife Service
Bloomington Indiana Field Office
620 South Walker Street
Bloomington, Indiana 47403-2121
robin_mcwilliams@fws.gov

Michelle Allen
Federal Highway Administration
Federal Office Building, Room 254
575 North Pennsylvania Street
Indianapolis, Indiana 46204
michelle.allen@dot.gov
Cc: Erica.tait@dot.gov

Rick Neilson
State Conservationist
Natural Resources Conservation Service
6013 Lakeside Boulevard
Indianapolis, Indiana 46278
rick.neilson@in.usda.gov

Indiana Geological Survey
611 North Walnut Grove
Bloomington, Indiana 47405
Early Coordination submittal at
https://igs.indiana.edu/eAssessment/

Chief, Groundwater Section
Indiana Department of Environmental Management
100 N. Senate Avenue
Indianapolis, IN 46204
jsulliva@idem.in.gov

Indiana Department of Environmental Management
Electronic Website Coordination
http://www.in.gov/idem/5284.htm

Manager, Public Hearings
Indiana Department of Transportation
100 N. Senate Avenue, Rm. 642
Indianapolis, IN 46204
rclark@indot.in.gov
cc: mwright@indot.in.gov

Regional Environmental Officer
Chicago Regional Office,
US Department of Housing & Urban Development
Metcalf Fed. Bldg.
77 W. Jackson Blvd. Rm 2401
Chicago, IL 60604
Paul.J.Lehmann@hud.gov

Environmental Coordinator
Indiana Department of Natural Resources
Division of Fish and Wildlife
Room W264, IGC South
402 West Washington Street
Indianapolis, Indiana 46204
environmentalreview@dnr.in.gov

Scott Manning
Strategic Communications Director
Indiana Department of Transportation
100 N. Senate Avenue
IGCN Room N755
Indianapolis, IN 46204
SManning1@indot.IN.gov

David Dye
Environmental Scoping Manager
INDOT – Seymour District Office
185 Agrico Lane
Seymour, IN 47274
ddye@indot.in.gov

Forest Supervisor
Hoosier National Forest
US Forest Service
811 Constitution Avenue
Bedford, Indiana 47421
kamick@fs.fed.us

U.S. Army Corps Engineers
Louisville District
ATTN: CELRL-RDN
P.O. Box 59
Louisville, KY 40201-0059
Gregory.A.McKay@usace.army.mil

Patrick Martin
MPO Transportation Planner
Bloomington/Monroe County MPO
401 N. Morton St., Suite 130
PO Box 100
Bloomington, Indiana 47402
martipa@bloomington.in.gov

John Hamilton
Mayor, City of Bloomington
401 N. Morton St.
Suite 210
Bloomington, IN 47404
mayor@bloomington.in.gov

Bloomington City Council
401 N. Morton St.
Bloomington, IN 47404
council@bloomington.in.gov

Michael Diekhoff
Bloomington Police Chief
220 E. 3rd St.
Bloomington, IN 47401
diekhofm@bloomington.in.gov

W. Craig Munroe
Captain of Administration
Indiana University Police Dept. Bloomington
1469 E 17th St.
Bloomington, IN 47408
wmunroe@iu.edu

Jason Moore
Bloomington Fire Chief
300 E. 4th St.
Bloomington, IN 47408
moorja@bloomington.in.gov

Steve Cotter
Natural Resource Manager
Bloomington Parks & Recreation Department
401 N. Morton St.
Suite 250
Bloomington, IN 47404
cotters@bloomington.in.gov

Planning & Transportation Department
City of Bloomington
401 N. Morton St.
Bloomington, IN 47404
planning@bloomington.in.gov

Brad Swain
Monroe County Sheriff
301 N. College Ave.
Bloomington, IN 47404
sheriffsoffice@co.monroe.in.us

Shelli Yoder
Monroe County Council President
100 W. Kirkwood Ave.
Bloomington, IN 47404
syoder@co.monroe.in.us

Eric Spoonmore
Monroe County Council President Pro Tempore
100 W. Kirkwood Ave.
Bloomington, IN 47404
espoonmore@co.monroe.in.us

Monroe County Council
100 W. Kirkwood Ave.
Bloomington, IN 47404
cpair@co.monroe.in.us

Trohn Enright-Randolph
Monroe County Surveyor
119 W. 7th St.
Bloomington, IN 47404
tenright@co.monroe.in.us

Lisa Ridge
Monroe County Highway Director
501 N. Morton St.
Suite 126
Bloomington, IN 47404
ljridge@co.monroe.in.us

Larry Wilson
Planning Director
Monroe County Planning Department
501 N. Morton St.
Bloomington, IN 47404
lwilson@co.monroe.in.us

Julie Thomas
President
Monroe County Commissioners
100 W. Kirkwood Ave.
Bloomington, IN47404
jthomas@co.monroe.in.us

Monroe County Commissioners
100 W. Kirkwood Ave.
Bloomington, IN47404
commissionersoffice@co.monroe.in.us

Allison Moore
Director
Monroe County Emergency Management Office
5900 W. Foster Curry Dr.
Bloomington, IN 47403
amoore@co.monroe.in.us

Dr. Judith DeMuth
Superintendent
Monroe County Community School Corp.
315 E. North Dr.
Bloomington, IN 47401
jdemuth@mccsc.edu

Dr. James Farmer
Indiana University Campus Farm
2920 E. 10th St.
Bloomington, IN 47408
jafarmer@indiana.edu

Lea Woodard
Indiana University Campus Farm
2920 E. 10th St.
Bloomington, IN 47408
lemawood@indiana.edu

Office of the President
Indiana University Bloomington Campus
Bryan Hall 200
107 S. Indiana Ave.
Bloomington, IN 47405
iupres@iu.edu

Nathan Oliver
Director of Transportation
Monroe County Community School Corp.
315 E. North Dr.
Bloomington, IN 47401
noliver@mccsc.edu

Lewis May
General Manager
Bloomington Transit
130 W. Grimes Ln.
Bloomington, IN 47403
mayl@bloomingtontransit.com

Phil Pedem
MS4 Coordinator
City of Bloomington
PO Box 1216
Bloomington, IN 47402
pedenp@bloomington.in.gov

Michael Dorsett
MS4 Coordinator
Indiana University – Bloomington
1514 E 3rd St.
Bloomington, IN 47401
mjdorset@indiana.edu

Tim Quillman
MS4 Coordinator
Monroe County
501 N. Morton St.
Suite 126
Bloomington, IN 47404
tquillman@co.monroe.in.us

Steve Wyatt
Executive Director
Bloomington Restorations, Inc.
2920 E. 10th St.
Bloomington, IN 47408
bri@bloomingtonrestorations.org

INDIANA DEPARTMENT OF TRANSPORTATION

100 North Senate Avenue
Room N642
Indianapolis, Indiana 46204

Eric Holcomb, Governor
Joe McGuinness, Commissioner

December 15, 2020 **Sample Early Coordination Letter**

{See Attached List}

Re: State Road 45 Added Travel Lane Project
Bloomington, Monroe County, Indiana
INDOT Des No.: 1800086
CMT Project No.: 18070904-14

Dear Interested Party:

The Indiana Department of Transportation (INDOT) and Federal Highway Administration (FHWA) intend to proceed with a project involving State Road (SR) 45 in Bloomington, Monroe County, Indiana. This letter is part of the early coordination phase of the environmental review process. We are requesting comments from your area of expertise regarding any possible environmental effects associated with this project. **Please use the above designation numbers and description in your reply.** We will incorporate your comments into a study of the project's environmental impacts. This is a state-sponsored project receiving federal funds.

Project Description
This project is located along SR 45 (10th Street), east of the SR 46 intersection in Bloomington, Monroe County, Indiana. The project area extends along SR 45 from the intersection with SR 46 to approximately 1,000 feet west of the SR 45 and Pete Ellis Drive/Discovery Parkway intersection. The project is located in Sections 34 and 35, Township 9 North, and Range 1 West of the U.S. Geological Survey (USGS) Bloomington and Unionville, Indiana Quadrangles.

SR 45 is classified by INDOT as a minor arterial and is a FHWA National Highway System (NHS) route. This 0.2-mile segment of SR 45 runs east-west and includes one thru lane in each direction with exclusive right- and left-turn lanes at the SR 46 intersection. A multi-use path is located along the north side of SR 45 and a sidewalk is located along portions of the south side of SR 45. There are existing bus stops on both sides of SR 45.

The current proposed project would include adding one travel lane in each direction along SR 45, and modifications to the SR 45 and SR 46 intersection east approach to accommodate the added travel lanes. The project will also add an eastbound, striped bike lane along the south side of SR 45 and reconstruct the existing multi-use path along the north side of SR 45. This project is being coordinated with the east-adjacent SR 45 and Pete Ellis Drive/Discovery Parkway intersection improvement project (Des. No. 1800199), which will provide exclusive left- and right-turn lanes at all intersection approaches within the SR 45 and Pete Ellis Drive/Discovery Parkway project area and includes extending the added travel lanes up to Pete Ellis Drive/Discovery Parkway and the bike lane and multi-use path to the eastern end of the project area at John Hinkle Place/Woodbridge Court.

The project is anticipated to require approximately 1.75 acres of new right-of-way from a total of two parcels along the north side of SR 45, and approximately 0.03 acres of temporary right-of-way. The maintenance of traffic (MOT) is anticipated to involve phased construction along SR 45, which will keep one lane of traffic open in each direction at all times. An alternative MOT would involve implementing a detour route; however, this is not recommended due to SR 45 being an arterial and major connector route within Bloomington. MOT plans will be coordinated with the SR 45 and Pete Ellis Drive/Discovery Parkway intersection improvement project.

Land use in the vicinity of the project is commercial and residential. A waters and wetlands determination identifying any water resources that may be present within the study area has been performed; no wetlands or other water resources were identified. A Department of Natural Resources Construction in a Floodway and 401/404 Permits are not anticipated to be required for this project. This project qualifies for the application of the USFWS range-wide programmatic informal consultation for the Indiana bat and Northern long-eared bat and project information will be submitted through USFWS's Information for Planning and Consultation (IPaC) separately. No trees are expected to be removed for this project.

The areas of additional right-of-way will be investigated by SJCA, Inc. for archaeological and historic resources for compliance with Section 106. The results of this investigation will be forwarded to the State Historic Preservation Officer for review and concurrence. The Hinkle-Garton Farmstead National Register Historic Site and Historic District are located at the southeastern edge of the study area. INDOT will ensure compliance with Section 106 of the National Historic Preservation Act of 1966.

Should we not receive a response **within thirty (30) calendar days** from the date of this letter, it will be assumed that your agency feels that there will be no adverse effects incurred as a result of the proposed project. However, should you find that an extension to the response time is necessary; a reasonable amount may be granted upon request.

If you have any questions or concerns regarding this matter, please feel free to contact Karlei Metcalf at kmetcalf1@indot.in.gov or contact me at 317-492-9166 or via email at creiter@cmtengr.com. Thank you in advance for your input.

Sincerely,

Crawford, Murphy & Tilly, Inc.

Cassie Reiter

Cassie Reiter
Project Manager

Attachments-
Maps (Location, Aerial, USGS Topographic)
Photographs

Note: Duplicate mapping and photographs were included in the Early Coordination Packet, but were intentionally removed. Please see Appendix B for maps and photographs.

The following agencies received Early Coordination Letters sent December 15, 2020:

Federal Highway Administration
Federal Office Building, Room 254
575 North Pennsylvania Street
Indianapolis, Indiana 46204
erica.tait@dot.gov

Indiana Geological and Water Survey
611 North Walnut Grove
Bloomington, Indiana 47405
Early Coordination submittal at
https://igws.indiana.edu/eAssessment/

Environmental Coordinator
Indiana Department of Natural Resources
Division of Fish and Wildlife
402 West Washington Street, Rm W273
Indianapolis, Indiana 46204
environmentalreview@dnr.in.gov

Chief, Groundwater Section
Indiana Department of Environmental Management
100 N. Senate Avenue
Indianapolis, IN 46204
https://www.in.gov/idem/cleanwater/pages/wellhead/

Indiana Department of Environmental Management
Electronic Website Coordination
http://www.in.gov/idem/5284.htm

Field Environmental Officer
Chicago Regional Office
US Department of Housing & Urban Development
Metcalf Fed. Bldg.
77 W. Jackson Blvd. Rm 2401
Chicago, IL 60604
Melanie.H.Castillo@hud.gov

David Dye
Environmental Section Manager
INDOT – Seymour District Office
ddye@indot.in.gov

Ron Bales
Environmental Policy Manager
Indiana Department of Transportation
100 N. Senate Ave. IGCN 642
Indianapolis, IN 46204
rbales@indot.in.gov

Karlei Metcalf
Project Manager
Indiana Department of Transportation
185 Agrico Lane
Seymour, IN 47274
kmetcalf@indot.in.gov

Scott Manning
Strategic Communications Director
Indiana Department of Transportation
100 N. Senate Avenue
IGCN Room N755
Indianapolis, IN 46204
SManning1@indot.IN.gov

Forest Supervisor
Hoosier National Forest
US Forest Service
811 Constitution Avenue
Bedford, Indiana 47421
kamick@fs.fed.us

Patrick Martin
MPO Transportation Planner
Bloomington/Monroe County MPO
401 N. Morton St., Suite 130
PO Box 100
Bloomington, Indiana 47402
martipa@bloomington.in.gov

Mayor John Hamilton
City of Bloomington – Office of the Mayor
401 N. Morton St., Suite 210
Bloomington, IN 47404
mayor@bloomington.in.gov

Bloomington City Council
401 N. Morton St., Suite 110
Bloomington, IN 47404
council@bloomington.in.gov

Michael Diekhoff
Bloomington Police Chief
220 E. 3rd St.
Bloomington, IN 47401
diekhofm@bloomington.in.gov

Chief Jill Lees
Indiana University Police Dept. Bloomington
1469 E 17th St.
Bloomington, IN 47408
jmlees@iu.edu

Chief Jason Moore
Bloomington Fire Department
300 E. 4th St.
Bloomington, IN 47408
moorja@bloomington.in.gov

Planning & Transportation Department
City of Bloomington
401 N. Morton St.
Bloomington, IN 47404
planning@bloomington.in.gov

Kelsey Thetonia
MS4 Coordinator
City of Bloomington
401 N. Morton St.
Bloomington, IN 47404
thetonik@bloomington.in.gov

Michael Dorsett
MS4 Coordinator
Indiana University – Bloomington
1514 E 3rd St.
Bloomington, IN 47401
mjdorset@indiana.edu

Tim Quillman
MS4 Coordinator Monroe County
501 N. Morton St. Suite 126
Bloomington, IN 47404
tquillman@co.monroe.in.us

Dr. Thomas Morrison
Vice President, Capital Planning & Facilities
Indiana University Bloomington
Bryan Hall 205A
107 S. Indiana Ave.
Bloomington, IN 47405
morrisot@iu.edu

Brad Swain
Monroe County Sheriff
Charlotte T. Zietlow Justice Center
301 N. College Ave.
Bloomington, IN 47404
sheriffsoffice@co.monroe.in.us

Monroe County Council
100 W. Kirkwood Ave.
Bloomington, IN 47404
mmiller@co.monroe.in.us

Monroe County Commissioners
100 W. Kirkwood Ave.
Bloomington, IN47404
commissionersoffice@co.monroe.in.us

Trohn Enright-Randolph
Monroe County Surveyor
119 W. 7th St.
Bloomington, IN 47404
tenright@co.monroe.in.us

Lisa Ridge
Monroe County Highway Director
501 N. Morton St.
Suite 126
Bloomington, IN 47404
ljridge@co.monroe.in.us

Allison Moore
Director
Monroe County Emergency Management Office
5900 W. Foster Curry Dr.
Bloomington, IN 47403
amoore@co.monroe.in.us

Dr. Judith DeMuth
Superintendent
Monroe County Community School Corp.
315 E. North Dr.
Bloomington, IN 47401
jdemuth@mccsc.edu

Nathan Oliver
Director of Transportation
Monroe County Community School Corp.
315 E. North Dr.
Bloomington, IN 47401
noliver@mccsc.edu

Lewis May
General Manager
Bloomington Transit
130 W. Grimes Ln.
Bloomington, IN 47403
mayl@bloomingtontransit.com

Penny Caudill
Health Administrator
Monroe County Health Department
119 W. 7th St.
Bloomington, IN 47404
pcaudill@co.monroe.in.us

Kyle Hardie
Director South Central Region
Design & Construction
Indiana University Health
950 N. Meridian St #1100
Indianapolis, IN 46204
khardie1@iuhealth.org

Indiana Department of Environmental Management

We Protect Hoosiers and Our Environment.

100 North Senate Avenue - Indianapolis, IN 46204
(800) 451-6027 - (317) 232-8603 - www.idem.IN.gov

Indiana Department of Transportation
Karlei Metcalf
185 Agrico Lane
Seymour , IN 47274
Date

Crawford, Murphy, & Tilly
Cassie Reiter
8790 Purdue Rd.
Indianapolis , IN 46268

To Engineers and Consultants Proposing Roadway Construction Projects:

RE: This project is located at the SR 45 (10th Street) and Pete Ellis Drive/North Range Road intersection in Bloomington, Monroe County, Indiana. The project area includes SR 45 from 0.1 mile east of the intersection to 0.1 mile west of the intersection and also includes Pete Ellis Drive from 0.1 mile south of the intersection and North Range Road from 0.1 mile north of the intersection. The proposed improvements would include providing exclusive left-turn and right-turn lanes on all approaches at the intersection. The improvements would involve widening portions of SR 45, Pete Ellis Drive, and North Range Road. Sidewalk and multi-use path reconstruction around the intersection may also be necessary.

This letter from the Indiana Department of Environmental Management (IDEM) serves as a standardized response to enquiries inviting IDEM comments on roadway construction, reconstruction, or other improvement projects within existing roadway corridors when the proposed scope of the project is beneath the threshold requiring a formal National Environmental Policy Act-mandated Environmental Assessment or Environmental Impact Statement. As the letter attempts to address all roadway-related environmental topics of potential concern, it is possible that not every topic addressed in the letter will be applicable to your particular roadway project.

For additional information on specific roadway-related topics of interest, please visit the appropriate Web pages cited below, many of which provide contact information for persons within the various program areas who can answer questions not fully addressed in this letter. Also please be mindful that some environmental requirements may be subject to change and so each person intending to include a copy of this letter in their project documentation packet is advised to download the most recently revised version of the letter; found at: http://www.in.gov/idem/5283.htm (http://www.in.gov/idem/5283.htm).

To ensure that all environmentally-related issues are adequately addressed, IDEM recommends that you read this letter in its entirety, and consider each of the following issues as you move forward with the planning of your proposed roadway construction, reconstruction, or improvement project:

WATER AND BIOTIC QUALITY

1. Section 404 of the Clean Water Act requires that you obtain a permit from the U.S. Army Corps of Engineers (USACE) before discharging dredged or fill materials into any wetlands or other waters, such as rivers, lakes, streams, and ditches. Other activities regulated include the relocation, channelization, widening, or other such alteration of a stream, and the mechanical clearing (use of heavy construction equipment) of wetlands. Thus, as a project owner or sponsor, it is your responsibility to ensure that no wetlands are

disturbed without the proper permit. Although you may initially refer to the U.S. Fish and Wildlife Service National Wetland Inventory maps as a means of identifying potential areas of concern, please be mindful that those maps do not depict jurisdictional wetlands regulated by the USACE or the Department of Environmental Management. A valid jurisdictional wetlands determination can only be made by the USACE, using the 1987 Wetland Delineation Manual.

USACE recommends that you have a consultant check to determine whether your project will abut, or lie within, a wetland area. To view a list of consultants that have requested to be included on a list posted by the USACE on their Web site, see USACE Permits and Public Notices (http://www.lrl.usace.army.mil/orf/default.asp) (http://www.lrl.usace.army.mil/orf /default.asp (http://www.lrl.usace.army.mil/orf/default.asp)) and then click on "Information" from the menu on the right-hand side of that page. Their "Consultant List" is the fourth entry down on the "Information" page. Please note that the USACE posts all consultants that request to appear on the list, and that inclusion of any particular consultant on the list does not represent an endorsement of that consultant by the USACE, or by IDEM.

Much of northern Indiana (Newton, Lake, Porter, LaPorte, St. Joseph, Elkhart, LaGrange, Steuben, and Dekalb counties; large portions of Jasper, Starke, Marshall, Noble, Allen, and Adams counties; and lesser portions of Benton, White, Pulaski, Kosciusko, and Wells counties) is served by the USACE District Office in Detroit (313-226-6812). The central and southern portions of the state (large portions of Benton, White, Pulaski, Kosciosko, and Wells counties; smaller portions of Jasper, Starke, Marshall , Noble, Allen, and Adams counties; and all other Indiana counties located in north-central, central, and southern Indiana) are served by the USACE Louisville District Office (502-315-6733).

Additional information on contacting these U.S. Army Corps of Engineers (USACE) District Offices, government agencies with jurisdiction over wetlands, and other water quality issues, can be found at http://www.in.gov/idem/4396.htm (http://www.in.gov/idem/4396.htm). IDEM recommends that impacts to wetlands and other water resources be avoided to the fullest extent.

2. In the event a Section 404 wetlands permit is required from the USACE, you also must obtain a Section 401 Water Quality Certification from the IDEM Office of Water Quality Wetlands Program. To learn more about the Wetlands Program, visit: http://www.in.gov/idem/4384.htm (http://www.in.gov/idem/4384.htm).

3. If the USACE determines that a wetland or other water body is isolated and not subject to Clean Water Act regulation, it is still regulated by the state of Indiana . A State Isolated Wetland permit from IDEM's Office of Water Quality (OWQ) is required for any activity that results in the discharge of dredged or fill materials into isolated wetlands. To learn more about isolated wetlands, contact the OWQ Wetlands Program at 317-233-8488.

4. If your project will involve over a 0.5 acre of wetland impact, stream relocation, or other large-scale alterations to water bodies such as the creation of a dam or a water diversion, you should seek additional input from the OWQ Wetlands Program staff. Consult the Web at: http://www.in.gov/idem/4384.htm (http://www.in.gov/idem/4384.htm) for the appropriate staff contact to further discuss your project.

5. Work within the one-hundred year floodway of a given water body is regulated by the Department of Natural Resources, Division of Water. The Division issues permits for activities regulated under the follow statutes:
    - IC 14-26-2 Lakes Preservation Act 312 IAC 11
    - IC 14-26-5 Lowering of Ten Acre Lakes Act No related code
    - IC 14-28-1 Flood Control Act 310 IAC 6-1
    - IC 14-29-1 Navigable Waterways Act 312 IAC 6
    - IC 14-29-3 Sand and Gravel Permits Act 312 IAC 6

- IC 14-29-4 Construction of Channels Act No related code

For information on these Indiana (statutory) Code and Indiana Administrative Code citations, see the DNR Web site at: http://www.in.gov/dnr/water/9451.htm (http://www.in.gov/dnr/water/9451.htm) . Contact the DNR Division of Water at 317-232-4160 for further information.

The physical disturbance of the stream and riparian vegetation, especially large trees overhanging any affected water bodies should be limited to only that which is absolutely necessary to complete the project. The shade provided by the large overhanging trees helps maintain proper stream temperatures and dissolved oxygen for aquatic life.

6. For projects involving construction activity (which includes clearing, grading, excavation and other land disturbing activities) that result in the disturbance of one (1), or more, acres of total land area, contact the Office of Water Quality – Watershed Planning Branch (317/233-1864) regarding the need for of a Rule 5 Storm Water Runoff Permit. Visit the following Web page
   - http://www.in.gov/idem/4902.htm (http://www.in.gov/idem/4902.htm)

   To obtain, and operate under, a Rule 5 permit you will first need to develop a Construction Plan (http://www.in.gov/idem/4917.htm#constreq (http://www.in.gov/idem/4917.htm#constreq)), and as described in 327 IAC 15-5-6.5 (http://www.in.gov/legislative/iac/T03270/A00150 [PDF] (http://www.in.gov/legislative/iac/T03270/A00150.PDF), pages 16 through 19). Before you may apply for a Rule 5 Permit, or begin construction, you must submit your Construction Plan to your county Soil and Water Conservation District (SWCD) (http://www.in.gov/isda/soil/contacts/map.html (http://www.in.gov/isda/soil/contacts/map.html)).

   Upon receipt of the construction plan, personnel of the SWCD or the Indiana Department of Environmental Management will review the plan to determine if it meets the requirements of 327 IAC 15-5. Plans that are deemed deficient will require re-submittal. If the plan is sufficient you will be notified and instructed to submit the verification to IDEM as part of the Rule 5 Notice of Intent (NOI) submittal. Once construction begins, staff of the SWCD or Indiana Department of Environmental Management will perform inspections of activities at the site for compliance with the regulation.

   Please be mindful that approximately 149 Municipal Separate Storm Sewer System (MS4) areas are now being established by various local governmental entities throughout the state as part of the implementation of Phase II federal storm water requirements. All of these MS4 areas will eventually take responsibility for Construction Plan review, inspection, and enforcement. As these MS4 areas obtain program approval from IDEM, they will be added to a list of MS4 areas posted on the IDEM Website at: http://www.in.gov/idem/4900.htm (http://www.in.gov/idem/4900.htm).

   If your project is located in an IDEM-approved MS4 area, please contact the local MS4 program about meeting their storm water requirements. Once the MS4 approves the plan, the NOI can be submitted to IDEM.

   Regardless of the size of your project, or which agency you work with to meet storm water requirements, IDEM recommends that appropriate structures and techniques be utilized both during the construction phase, and after completion of the project, to minimize the impacts associated with storm water runoff. The use of appropriate planning and site development and appropriate storm water quality measures are recommended to prevent soil from leaving the construction site during active land disturbance and for post construction water quality concerns. Information and assistance regarding storm water related to construction activities are available from the Soil and Water Conservation District (SWCD) offices in each county or from IDEM.

7. For projects involving impacts to fish and botanical resources, contact the Department of Natural Resources - Division of Fish and Wildlife (317/232-4080) for addition project input.

8. For projects involving water main construction, water main extensions, and new public water supplies, contact the Office of Water Quality - Drinking Water Branch (317-308-3299) regarding the need for permits.

9. For projects involving effluent discharges to waters of the State of Indiana , contact the Office of Water Quality - Permits Branch (317-233-0468) regarding the need for a National Pollutant Discharge Elimination System (NPDES) permit.

10. For projects involving the construction of wastewater facilities and sewer lines, contact the Office of Water Quality - Permits Branch (317-232-8675) regarding the need for permits.

AIR QUALIT

The above-noted project should be designed to minimize any impact on ambient air quality in, or near, the project area. The project must comply with all federal and state air pollution regulations. Consideration should be given to the following:

1. Regarding open burning, and disposing of organic debris generated by land clearing activities; some types of open burning are allowed (http://www.in.gov/idem/4148.htm (http://www.in.gov/idem/4148.htm)) under specific conditions. You also can seek an open burning variance from IDEM.

   However, IDEM generally recommends that you take vegetative wastes to a registered yard waste composting facility or that the waste be chipped or shredded with composting on site (you must register with IDEM if more than 2,000 pounds is to be composted; contact 317/232-0066). The finished compost can then be used as a mulch or soil amendment. You also may bury any vegetative wastes (such as leaves, twigs, branches, limbs, tree trunks and stumps) onsite, although burying large quantities of such material can lead to subsidence problems, later on.

   Reasonable precautions must be taken to minimize fugitive dust emissions from construction and demolition activities. For example, wetting the area with water, constructing wind barriers, or treating dusty areas with chemical stabilizers (such as calcium chloride or several other commercial products). Dirt tracked onto paved roads from unpaved areas should be minimized.

   Additionally, if construction or demolition is conducted in a wooded area where blackbirds have roosted or abandoned buildings or building sections in which pigeons or bats have roosted for 3-5 years precautionary measures should be taken to avoid an outbreak of histoplasmosis. This disease is caused by the fungus Histoplasma capsulatum, which stems from bird or bat droppings that have accumulated in one area for 3-5 years. The spores from this fungus become airborne when the area is disturbed and can cause infections over an entire community downwind of the site. The area should be wetted down prior to cleanup or demolition of the project site. For more detailed information on histoplasmosis prevention and control, please contact the Acute Disease Control Division of the Indiana State Department of Health at (317) 233-7272.

2. The U.S. EPA and the Surgeon General recommend that people not have long-term exposure to radon at levels above 4 pCi/L. (For a county-by-county map of predicted radon levels in Indiana, visit: http://www.in.gov/idem/4145.htm (http://www.in.gov/idem/4145.htm).)

   The U.S. EPA further recommends that all homes (and apartments within three stories of ground level) be tested for radon. If in-home radon levels are determined to be 4 pCi/L, or higher, EPA recommends a follow-up test. If the second test confirms that radon levels are 4 pCi/L, or higher, EPA recommends the installation

of radon-reduction measures. (For a list of qualified radon testers and radon mitigation (or reduction) specialists visit: http://www.in.gov/isdh/regsvcs/radhealth/pdfs/radon_testers_mitigators_list.pdf (http://www.in.gov/isdh/regsvcs/radhealth/pdfs/radon_testers_mitigators_list.pdf).) It also is recommended that radon reduction measures be built into all new homes, particularly in areas like Indiana that have moderate to high predicted radon levels.

To learn more about radon, radon risks, and ways to reduce exposure visit: http://www.in.gov/isdh/regsvcs/radhealth/radon.htm (http://www.in.gov/isdh/regsvcs/radhealth/radon.htm), http://www.in.gov/idem/4145.htm (http://www.in.gov/idem/4145.htm), or http://www.epa.gov/radon/index.html (http://www.epa.gov/radon/index.html).

3. With respect to asbestos removal: all facilities slated for renovation or demolition (except residential buildings that have (4) four or fewer dwelling units and which will not be used for commercial purposes) must be inspected by an Indiana-licensed asbestos inspector prior to the commencement of any renovation or demolition activities. If regulated asbestos-containing material (RACM) that may become airborne is found, any subsequent demolition, renovation, or asbestos removal activities must be performed in accordance with the proper notification and emission control requirements.

   If no asbestos is found where a renovation activity will occur, or if the renovation involves removal of less than 260 linear feet of RACM off of pipes, less than 160 square feet of RACM off of other facility components, or less than 35 cubic feet of RACM off of all facility components, the owner or operator of the project does not need to notify IDEM before beginning the renovation activity.

   For questions on asbestos demolition and renovation activities, you can also call IDEM's Lead/Asbestos section at 1-888-574-8150.

   However, in all cases where a demolition activity will occur (even if no asbestos is found), the owner or operator must still notify IDEM 10 working days prior to the demolition, using the form found at http://www.in.gov/icpr/webfile/formsdiv/44593.pdf (http://www.in.gov/icpr/webfile/formsdiv/44593.pdf).

   Anyone submitting a renovation/demolition notification form will be billed a notification fee based upon the amount of friable asbestos containing material to be removed or demolished. Projects that involve the removal of more than 2,600 linear feet of friable asbestos containing materials on pipes, or 1,600 square feet or 400 cubic feet of friable asbestos containing material on other facility components, will be billed a fee of $150 per project; projects below these amounts will be billed a fee of $50 per project. All notification remitters will be billed on a quarterly basis.

   For more information about IDEM policy regarding asbestos removal and disposal, visit: http://www.in.gov/idem/4983.htm (http://www.in.gov/idem/4983.htm).

4. With respect to lead-based paint removal: IDEM encourages all efforts to minimize human exposure to lead-based paint chips and dust. IDEM is particularly concerned that young children exposed to lead can suffer from learning disabilities. Although lead-based paint abatement efforts are not mandatory, any abatement that is conducted within housing built before January 1, 1978 , or a child-occupied facility is required to comply with all lead-based paint work practice standards, licensing and notification requirements. For more information about lead-based paint removal visit: http://www.in.gov/isdh/19131.htm (http://www.in.gov/isdh/19131.htm).

5. Ensure that asphalt paving plants are permitted and operate properly. The use of cutback asphalt, or asphalt emulsion containing more than seven percent (7%) oil distillate, is prohibited during the months April through October. See 326 IAC 8-5-2 , Asphalt Paving Rule

(http://www.ai.org/legislative/iac/T03260/A00080.PDF (http://www.ai.org/legislative/iac/T03260/A00080.PDF)).

6. If your project involves the construction of a new source of air emissions or the modification of an existing source of air emissions or air pollution control equipment, it will need to be reviewed by the IDEM Office of Air Quality (OAQ). A registration or permit may be required under 326 IAC 2 (View at: www.ai.org/legislative/iac/t03260/a00020.pdf (http://www.ai.org/legislative/iac/t03260/a00020.pdf).) New sources that use or emit hazardous air pollutants may be subject to Section 112 of the Clean Air Act and corresponding state air regulations governing hazardous air pollutants.

7. For more information on air permits visit: http://www.in.gov/idem/4223.htm (http://www.in.gov/idem/4223.htm), or to initiate the IDEM air permitting process, please contact the Office of Air Quality Permit Reviewer of the Day at (317) 233-0178 or OAMPROD atdem.state.in.us.

LAND QUALITY

In order to maintain compliance with all applicable laws regarding contamination and/or proper waste disposal, IDEM recommends that:

1. If the site is found to contain any areas used to dispose of solid or hazardous waste, you need to contact the Office of Land Quality (OLQ)at 317-308-3103.

2. All solid wastes generated by the project, or removed from the project site, need to be taken to a properly permitted solid waste processing or disposal facility. For more information, visit http://www.in.gov/idem/4998.htm (http://www.in.gov/idem/4998.htm).

3. If any contaminated soils are discovered during this project, they may be subject to disposal as hazardous waste. Please contact the OLQ at 317-308-3103 to obtain information on proper disposal procedures.

4. If PCBs are found at this site, please contact the Industrial Waste Section of OLQ at 317-308-3103 for information regarding management of any PCB wastes from this site.

5. If there are any asbestos disposal issues related to this site, please contact the Industrial Waste Section of OLQ at 317-308-3103 for information regarding the management of asbestos wastes (Asbestos removal is addressed above, under Air Quality).

6. If the project involves the installation or removal of an underground storage tank, or involves contamination from an underground storage tank, you must contact the IDEM Underground Storage Tank program at 317/308-3039. See: http://www.in.gov/idem/4999.htm (http://www.in.gov/idem/4999.htm).

FINAL REMARKS

Should you need to obtain any environmental permits in association with this proposed project, please be mindful that IC 13-15-8 requires that you notify all adjoining property owners and/or occupants within ten days your submittal of each permit application. However, if you are seeking multiple permits, you can still meet the notification requirement with a single notice if all required permit applications are submitted with the same ten day period.

Should the scope of the proposed project be expanded to the extent that a National Environmental Policy Act Environmental Assessment (EA) or Environmental Impact Statement (EIS) is required, IDEM will actively participate in any early interagency coordination review of the project.

Meanwhile, please note that this letter does not constitute a permit, license, endorsement or any other form of approval on the part of the Indiana Department of Environmental Management regarding any project for which a copy of this letter is used. Also note that is it the responsibility of the project engineer or consultant using this letter to ensure that the most current draft of this document, which is located at http://www.in.gov/idem/5284.htm (http://www.in.gov/idem/5284.htm), is used.

Signature(s) of the Applicant

I acknowledge that the following proposed roadway project will be financed in part, or in whole, by public monies.

Project Description

This project is located at the SR 45 (10th Street) and Pete Ellis Drive/North Range Road intersection in Bloomington, Monroe County, Indiana. The project area includes SR 45 from 0.1 mile east of the intersection to 0.1 mile west of the intersection and also includes Pete Ellis Drive from 0.1 mile south of the intersection and North Range Road from 0.1 mile north of the intersection. The proposed improvements would include providing exclusive left-turn and right-turn lanes on all approaches at the intersection. The improvements would involve widening portions of SR 45, Pete Ellis Drive, and North Range Road. Sidewalk and multi-use path reconstruction around the intersection may also be necessary.

With my signature, I do hereby affirm that I have read the letter from the Indiana Department of Environment that appears directly above. In addition, I understand that in order to complete that project in which I am interested, with a minimum of impact to the environment, I must consider all the issues addressed in the aforementioned letter, and further, that I must obtain any required permits.

Date: _____

Signature of the INDOT
Project Engineer or Other Responsible Agent Karlei Metcalf

Karlei Metcalf

Date: 10/1/2019

Signature of the
For Hire Consultant _____ Cassie Reiter _____

Cassie Reiter

Indiana Department of Environmental Management

We Protect Hoosiers and Our Environment.

100 North Senate Avenue - Indianapolis, IN 46204
(800) 451-6027 - (317) 232-8603 - www.idem.IN.gov

Indiana Dept. of Transportation
Karlei Metcalf
185 Agrico Lane
Seymour , IN 47274
Date

Crawford, Murphy, & Tilly
Cassie Reiter
8790 Purdue Rd.
Indianapolis , IN 46268

To Engineers and Consultants Proposing Roadway Construction Projects:

RE: This project is located along SR 45 (10th Street), east of the SR 46 intersection in Bloomington, Monroe County, Indiana. The project area extends along SR 45 from the intersection with SR 46 to approximately 1,000 feet west of the SR 45 and Pete Ellis Drive/Discovery Parkway intersection. The current proposed project would include adding one travel lane in each direction along SR 45, and modifications to the SR 45 and SR 46 intersection east approach to accommodate the added travel lanes. The project will also add an eastbound, striped bike lane along the south side of SR 45 and reconstruct the existing multi-use path along the north side of SR 45.

This letter from the Indiana Department of Environmental Management (IDEM) serves as a standardized response to enquiries inviting IDEM comments on roadway construction, reconstruction, or other improvement projects within existing roadway corridors when the proposed scope of the project is beneath the threshold requiring a formal National Environmental Policy Act-mandated Environmental Assessment or Environmental Impact Statement. As the letter attempts to address all roadway-related environmental topics of potential concern, it is possible that not every topic addressed in the letter will be applicable to your particular roadway project.

For additional information on specific roadway-related topics of interest, please visit the appropriate Web pages cited below, many of which provide contact information for persons within the various program areas who can answer questions not fully addressed in this letter. Also please be mindful that some environmental requirements may be subject to change and so each person intending to include a copy of this letter in their project documentation packet is advised to download the most recently revised version of the letter; found at: http://www.in.gov/idem/5283.htm (http://www.in.gov/idem/5283.htm).

To ensure that all environmentally-related issues are adequately addressed, IDEM recommends that you read this letter in its entirety, and consider each of the following issues as you move forward with the planning of your proposed roadway construction, reconstruction, or improvement project:

WATER AND BIOTIC QUALITY

1. Section 404 of the Clean Water Act requires that you obtain a permit from the U.S. Army Corps of Engineers (USACE) before discharging dredged or fill materials into any wetlands or other waters, such as rivers, lakes, streams, and ditches. Other activities regulated include the relocation, channelization, widening, or other such alteration of a stream, and the mechanical clearing (use of heavy construction equipment) of wetlands. Thus, as a project owner or sponsor, it is your responsibility to ensure that no wetlands are

disturbed without the proper permit. Although you may initially refer to the U.S. Fish and Wildlife Service National Wetland Inventory maps as a means of identifying potential areas of concern, please be mindful that those maps do not depict jurisdictional wetlands regulated by the USACE or the Department of Environmental Management. A valid jurisdictional wetlands determination can only be made by the USACE, using the 1987 Wetland Delineation Manual.

USACE recommends that you have a consultant check to determine whether your project will abut, or lie within, a wetland area. To view a list of consultants that have requested to be included on a list posted by the USACE on their Web site, see USACE Permits and Public Notices (http://www.lrl.usace.army.mil/orf/default.asp) (http://www.lrl.usace.army.mil/orf /default.asp (http://www.lrl.usace.army.mil/orf/default.asp)) and then click on "Information" from the menu on the right-hand side of that page. Their "Consultant List" is the fourth entry down on the "Information" page. Please note that the USACE posts all consultants that request to appear on the list, and that inclusion of any particular consultant on the list does not represent an endorsement of that consultant by the USACE, or by IDEM.

Much of northern Indiana (Newton, Lake, Porter, LaPorte, St. Joseph, Elkhart, LaGrange, Steuben, and Dekalb counties; large portions of Jasper, Starke, Marshall, Noble, Allen, and Adams counties; and lesser portions of Benton, White, Pulaski, Kosciusko, and Wells counties) is served by the USACE District Office in Detroit (313-226-6812). The central and southern portions of the state (large portions of Benton, White, Pulaski, Kosciosko, and Wells counties; smaller portions of Jasper, Starke, Marshall , Noble, Allen, and Adams counties; and all other Indiana counties located in north-central, central, and southern Indiana) are served by the USACE Louisville District Office (502-315-6733).

Additional information on contacting these U.S. Army Corps of Engineers (USACE) District Offices, government agencies with jurisdiction over wetlands, and other water quality issues, can be found at http://www.in.gov/idem/4396.htm (http://www.in.gov/idem/4396.htm). IDEM recommends that impacts to wetlands and other water resources be avoided to the fullest extent.

2. In the event a Section 404 wetlands permit is required from the USACE, you also must obtain a Section 401 Water Quality Certification from the IDEM Office of Water Quality Wetlands Program. To learn more about the Wetlands Program, visit: http://www.in.gov/idem/4384.htm (http://www.in.gov/idem/4384.htm).

3. If the USACE determines that a wetland or other water body is isolated and not subject to Clean Water Act regulation, it is still regulated by the state of Indiana . A State Isolated Wetland permit from IDEM's Office of Water Quality (OWQ) is required for any activity that results in the discharge of dredged or fill materials into isolated wetlands. To learn more about isolated wetlands, contact the OWQ Wetlands Program at 317-233-8488.

4. If your project will involve over a 0.5 acre of wetland impact, stream relocation, or other large-scale alterations to water bodies such as the creation of a dam or a water diversion, you should seek additional input from the OWQ Wetlands Program staff. Consult the Web at: http://www.in.gov/idem/4384.htm (http://www.in.gov/idem/4384.htm) for the appropriate staff contact to further discuss your project.

5. Work within the one-hundred year floodway of a given water body is regulated by the Department of Natural Resources, Division of Water. The Division issues permits for activities regulated under the follow statutes:
    - IC 14-26-2 Lakes Preservation Act 312 IAC 11
    - IC 14-26-5 Lowering of Ten Acre Lakes Act No related code
    - IC 14-28-1 Flood Control Act 310 IAC 6-1
    - IC 14-29-1 Navigable Waterways Act 312 IAC 6
    - IC 14-29-3 Sand and Gravel Permits Act 312 IAC 6

- IC 14-29-4 Construction of Channels Act No related code

For information on these Indiana (statutory) Code and Indiana Administrative Code citations, see the DNR Web site at: http://www.in.gov/dnr/water/9451.htm (http://www.in.gov/dnr/water/9451.htm) . Contact the DNR Division of Water at 317-232-4160 for further information.

The physical disturbance of the stream and riparian vegetation, especially large trees overhanging any affected water bodies should be limited to only that which is absolutely necessary to complete the project. The shade provided by the large overhanging trees helps maintain proper stream temperatures and dissolved oxygen for aquatic life.

6. For projects involving construction activity (which includes clearing, grading, excavation and other land disturbing activities) that result in the disturbance of one (1), or more, acres of total land area, contact the Office of Water Quality – Watershed Planning Branch (317/233-1864) regarding the need for of a Rule 5 Storm Water Runoff Permit. Visit the following Web page
   - http://www.in.gov/idem/4902.htm (http://www.in.gov/idem/4902.htm)

   To obtain, and operate under, a Rule 5 permit you will first need to develop a Construction Plan (http://www.in.gov/idem/4917.htm#constreq (http://www.in.gov/idem/4917.htm#constreq)), and as described in 327 IAC 15-5-6.5 (http://www.in.gov/legislative/iac/T03270/A00150 [PDF] (http://www.in.gov/legislative/iac/T03270/A00150.PDF), pages 16 through 19). Before you may apply for a Rule 5 Permit, or begin construction, you must submit your Construction Plan to your county Soil and Water Conservation District (SWCD) (http://www.in.gov/isda/soil/contacts/map.html (http://www.in.gov/isda/soil/contacts/map.html)).

   Upon receipt of the construction plan, personnel of the SWCD or the Indiana Department of Environmental Management will review the plan to determine if it meets the requirements of 327 IAC 15-5. Plans that are deemed deficient will require re-submittal. If the plan is sufficient you will be notified and instructed to submit the verification to IDEM as part of the Rule 5 Notice of Intent (NOI) submittal. Once construction begins, staff of the SWCD or Indiana Department of Environmental Management will perform inspections of activities at the site for compliance with the regulation.

   Please be mindful that approximately 149 Municipal Separate Storm Sewer System (MS4) areas are now being established by various local governmental entities throughout the state as part of the implementation of Phase II federal storm water requirements. All of these MS4 areas will eventually take responsibility for Construction Plan review, inspection, and enforcement. As these MS4 areas obtain program approval from IDEM, they will be added to a list of MS4 areas posted on the IDEM Website at: http://www.in.gov/idem/4900.htm (http://www.in.gov/idem/4900.htm).

   If your project is located in an IDEM-approved MS4 area, please contact the local MS4 program about meeting their storm water requirements. Once the MS4 approves the plan, the NOI can be submitted to IDEM.

   Regardless of the size of your project, or which agency you work with to meet storm water requirements, IDEM recommends that appropriate structures and techniques be utilized both during the construction phase, and after completion of the project, to minimize the impacts associated with storm water runoff. The use of appropriate planning and site development and appropriate storm water quality measures are recommended to prevent soil from leaving the construction site during active land disturbance and for post construction water quality concerns. Information and assistance regarding storm water related to construction activities are available from the Soil and Water Conservation District (SWCD) offices in each county or from IDEM.

7. For projects involving impacts to fish and botanical resources, contact the Department of Natural Resources - Division of Fish and Wildlife (317/232-4080) for addition project input.

8. For projects involving water main construction, water main extensions, and new public water supplies, contact the Office of Water Quality - Drinking Water Branch (317-308-3299) regarding the need for permits.

9. For projects involving effluent discharges to waters of the State of Indiana , contact the Office of Water Quality - Permits Branch (317-233-0468) regarding the need for a National Pollutant Discharge Elimination System (NPDES) permit.

10. For projects involving the construction of wastewater facilities and sewer lines, contact the Office of Water Quality - Permits Branch (317-232-8675) regarding the need for permits.

AIR QUALITY

The above-noted project should be designed to minimize any impact on ambient air quality in, or near, the project area. The project must comply with all federal and state air pollution regulations. Consideration should be given to the following:

1. Regarding open burning, and disposing of organic debris generated by land clearing activities; some types of open burning are allowed (http://www.in.gov/idem/4148.htm (http://www.in.gov/idem/4148.htm)) under specific conditions. You also can seek an open burning variance from IDEM.

   However, IDEM generally recommends that you take vegetative wastes to a registered yard waste composting facility or that the waste be chipped or shredded with composting on site (you must register with IDEM if more than 2,000 pounds is to be composted; contact 317/232-0066). The finished compost can then be used as a mulch or soil amendment. You also may bury any vegetative wastes (such as leaves, twigs, branches, limbs, tree trunks and stumps) onsite, although burying large quantities of such material can lead to subsidence problems, later on.

   Reasonable precautions must be taken to minimize fugitive dust emissions from construction and demolition activities. For example, wetting the area with water, constructing wind barriers, or treating dusty areas with chemical stabilizers (such as calcium chloride or several other commercial products). Dirt tracked onto paved roads from unpaved areas should be minimized.

   Additionally, if construction or demolition is conducted in a wooded area where blackbirds have roosted or abandoned buildings or building sections in which pigeons or bats have roosted for 3-5 years precautionary measures should be taken to avoid an outbreak of histoplasmosis. This disease is caused by the fungus Histoplasma capsulatum, which stems from bird or bat droppings that have accumulated in one area for 3-5 years. The spores from this fungus become airborne when the area is disturbed and can cause infections over an entire community downwind of the site. The area should be wetted down prior to cleanup or demolition of the project site. For more detailed information on histoplasmosis prevention and control, please contact the Acute Disease Control Division of the Indiana State Department of Health at (317) 233-7272.

2. The U.S. EPA and the Surgeon General recommend that people not have long-term exposure to radon at levels above 4 pCi/L. (For a county-by-county map of predicted radon levels in Indiana, visit: http://www.in.gov/idem/4145.htm (http://www.in.gov/idem/4145.htm).)

   The U.S. EPA further recommends that all homes (and apartments within three stories of ground level) be tested for radon. If in-home radon levels are determined to be 4 pCi/L, or higher, EPA recommends a follow-up test. If the second test confirms that radon levels are 4 pCi/L, or higher, EPA recommends the installation

of radon-reduction measures. (For a list of qualified radon testers and radon mitigation (or reduction) specialists visit: http://www.in.gov/isdh/regsvcs/radhealth/pdfs/radon_testers_mitigators_list.pdf (http://www.in.gov/isdh/regsvcs/radhealth/pdfs/radon_testers_mitigators_list.pdf).) It also is recommended that radon reduction measures be built into all new homes, particularly in areas like Indiana that have moderate to high predicted radon levels.

To learn more about radon, radon risks, and ways to reduce exposure visit: http://www.in.gov/isdh/regsvcs/radhealth/radon.htm (http://www.in.gov/isdh/regsvcs/radhealth/radon.htm), http://www.in.gov/idem/4145.htm (http://www.in.gov/idem/4145.htm), or http://www.epa.gov/radon/index.html (http://www.epa.gov/radon/index.html).

3. With respect to asbestos removal: all facilities slated for renovation or demolition (except residential buildings that have (4) four or fewer dwelling units and which will not be used for commercial purposes) must be inspected by an Indiana-licensed asbestos inspector prior to the commencement of any renovation or demolition activities. If regulated asbestos-containing material (RACM) that may become airborne is found, any subsequent demolition, renovation, or asbestos removal activities must be performed in accordance with the proper notification and emission control requirements.

   If no asbestos is found where a renovation activity will occur, or if the renovation involves removal of less than 260 linear feet of RACM off of pipes, less than 160 square feet of RACM off of other facility components, or less than 35 cubic feet of RACM off of all facility components, the owner or operator of the project does not need to notify IDEM before beginning the renovation activity.

   For questions on asbestos demolition and renovation activities, you can also call IDEM's Lead/Asbestos section at 1-888-574-8150.

   However, in all cases where a demolition activity will occur (even if no asbestos is found), the owner or operator must still notify IDEM 10 working days prior to the demolition, using the form found at http://www.in.gov/icpr/webfile/formsdiv/44593.pdf (http://www.in.gov/icpr/webfile/formsdiv/44593.pdf).

   Anyone submitting a renovation/demolition notification form will be billed a notification fee based upon the amount of friable asbestos containing material to be removed or demolished. Projects that involve the removal of more than 2,600 linear feet of friable asbestos containing materials on pipes, or 1,600 square feet or 400 cubic feet of friable asbestos containing material on other facility components, will be billed a fee of $150 per project; projects below these amounts will be billed a fee of $50 per project. All notification remitters will be billed on a quarterly basis.

   For more information about IDEM policy regarding asbestos removal and disposal, visit: http://www.in.gov/idem/4983.htm (http://www.in.gov/idem/4983.htm).

4. With respect to lead-based paint removal: IDEM encourages all efforts to minimize human exposure to lead-based paint chips and dust. IDEM is particularly concerned that young children exposed to lead can suffer from learning disabilities. Although lead-based paint abatement efforts are not mandatory, any abatement that is conducted within housing built before January 1, 1978 , or a child-occupied facility is required to comply with all lead-based paint work practice standards, licensing and notification requirements. For more information about lead-based paint removal visit: http://www.in.gov/isdh/19131.htm (http://www.in.gov/isdh/19131.htm).

5. Ensure that asphalt paving plants are permitted and operate properly. The use of cutback asphalt, or asphalt emulsion containing more than seven percent (7%) oil distillate, is prohibited during the months April through October. See 326 IAC 8-5-2 , Asphalt Paving Rule

(http://www.ai.org/legislative/iac/T03260/A00080.PDF (http://www.ai.org/legislative/iac/T03260/A00080.PDF)).

6. If your project involves the construction of a new source of air emissions or the modification of an existing source of air emissions or air pollution control equipment, it will need to be reviewed by the IDEM Office of Air Quality (OAQ). A registration or permit may be required under 326 IAC 2 (View at: www.ai.org/legislative/iac/t03260/a00020.pdf (http://www.ai.org/legislative/iac/t03260/a00020.pdf).) New sources that use or emit hazardous air pollutants may be subject to Section 112 of the Clean Air Act and corresponding state air regulations governing hazardous air pollutants.

7. For more information on air permits visit: http://www.in.gov/idem/4223.htm (http://www.in.gov/idem/4223.htm), or to initiate the IDEM air permitting process, please contact the Office of Air Quality Permit Reviewer of the Day at (317) 233-0178 or OAMPROD atdem.state.in.us.

LAND QUALITY

In order to maintain compliance with all applicable laws regarding contamination and/or proper waste disposal, IDEM recommends that:

1. If the site is found to contain any areas used to dispose of solid or hazardous waste, you need to contact the Office of Land Quality (OLQ)at 317-308-3103.

2. All solid wastes generated by the project, or removed from the project site, need to be taken to a properly permitted solid waste processing or disposal facility. For more information, visit http://www.in.gov/idem/4998.htm (http://www.in.gov/idem/4998.htm).

3. If any contaminated soils are discovered during this project, they may be subject to disposal as hazardous waste. Please contact the OLQ at 317-308-3103 to obtain information on proper disposal procedures.

4. If PCBs are found at this site, please contact the Industrial Waste Section of OLQ at 317-308-3103 for information regarding management of any PCB wastes from this site.

5. If there are any asbestos disposal issues related to this site, please contact the Industrial Waste Section of OLQ at 317-308-3103 for information regarding the management of asbestos wastes (Asbestos removal is addressed above, under Air Quality).

6. If the project involves the installation or removal of an underground storage tank, or involves contamination from an underground storage tank, you must contact the IDEM Underground Storage Tank program at 317/308-3039. See: http://www.in.gov/idem/4999.htm (http://www.in.gov/idem/4999.htm).

FINAL REMARKS

Should you need to obtain any environmental permits in association with this proposed project, please be mindful that IC 13-15-8 requires that you notify all adjoining property owners and/or occupants within ten days your submittal of each permit application. However, if you are seeking multiple permits, you can still meet the notification requirement with a single notice if all required permit applications are submitted with the same ten day period.

Should the scope of the proposed project be expanded to the extent that a National Environmental Policy Act Environmental Assessment (EA) or Environmental Impact Statement (EIS) is required, IDEM will actively participate in any early interagency coordination review of the project.

Meanwhile, please note that this letter does not constitute a permit, license, endorsement or any other form of approval on the part of the Indiana Department of Environmental Management regarding any project for which a copy of this letter is used. Also note that is it the responsibility of the project engineer or consultant using this letter to ensure that the most current draft of this document, which is located at http://www.in.gov/idem/5284.htm (http://www.in.gov/idem/5284.htm), is used.

Signature(s) of the Applicant

I acknowledge that the following proposed roadway project will be financed in part, or in whole, by public monies.

Project Description

This project is located along SR 45 (10th Street), east of the SR 46 intersection in Bloomington, Monroe County, Indiana. The project area extends along SR 45 from the intersection with SR 46 to approximately 1,000 feet west of the SR 45 and Pete Ellis Drive/Discovery Parkway intersection. The current proposed project would include adding one travel lane in each direction along SR 45, and modifications to the SR 45 and SR 46 intersection east approach to accommodate the added travel lanes. The project will also add an eastbound, striped bike lane along the south side of SR 45 and reconstruct the existing multi-use path along the north side of SR 45.

With my signature, I do hereby affirm that I have read the letter from the Indiana Department of Environment that appears directly above. In addition, I understand that in order to complete that project in which I am interested, with a minimum of impact to the environment, I must consider all the issues addressed in the aforementioned letter, and further, that I must obtain any required permits.

Date: 12/22/2020

Signature of the INDOT
Project Engineer or Other Responsible Agent Karlei Metcalf

Karlei Metcalf

Date: 12/15/2020

Signature of the
For Hire Consultant Cassie Reiter

Cassie Reiter

THIS IS NOT A PERMIT

State of Indiana
DEPARTMENT OF NATURAL RESOURCES
Division of Fish and Wildlife
Early Coordination/Environmental Assessment

DNR #: ER-21723 **Request Received:** August 5, 2019

Requestor: Crawford, Murphy, and Tilley, Inc
Cassie Reiter
8790 Purdue Road
Indianapolis, IN 46268

Project: SR 45 intersection improvement at Pete Ellis Drive/North Range Road: addition of exclusive left-turn and right-turn lanes on all approaches, and possible multi-use path reconstruction around the intersection, Bloomington; Des #1800199

County/Site info: Monroe

The Indiana Department of Natural Resources has reviewed the above referenced project per your request. Our agency offers the following comments for your information and in accordance with the National Environmental Policy Act of 1969.

If our agency has regulatory jurisdiction over the project, the recommendations contained in this letter may become requirements of any permit issued. If we do not have permitting authority, all recommendations are voluntary.

Regulatory Assessment: Formal approval by the Department of Natural Resources under the regulatory programs administered by the Division of Water is not required for this project.

Natural Heritage Database: The Natural Heritage Program's data have been checked.
To date, no plant or animal species listed as state or federally threatened, endangered, or rare have been reported to occur in the project vicinity.

Fish & Wildlife Comments: The measures below should be implemented to avoid, minimize, or compensate for impacts to fish, wildlife, and botanical resources:
1. Revegetate all bare and disturbed areas with a mixture of grasses (excluding all varieties of tall fescue) and legumes as soon as possible upon completion; low endophyte tall fescue may be used in the ditch bottom and side slopes only.
2. Minimize and contain within the project limits all tree and brush clearing.
3. Do not cut any trees suitable for Indiana bat or Northern Long-eared bat roosting (greater than 5 inches dbh, living or dead, with loose hanging bark, or with cracks, crevices, or cavities) from April 1 through September 30.
4. Appropriately designed measures for controlling erosion and sediment must be implemented to prevent sediment from entering the stream or leaving the construction site; maintain these measures until construction is complete and all disturbed areas are stabilized.
5. Plant five trees, at least 2 inches in diameter-at-breast height, for each tree which is removed that is ten inches or greater in diameter-at-breast height.

Contact Staff: Christie L. Stanifer, Environ. Coordinator, Fish & Wildlife
Our agency appreciates this opportunity to be of service. Please contact the above staff member at (317) 232-4080 if we can be of further assistance.

Christie L. Stanifer **Date:** September 4, 2019

Christie L. Stanifer
Environ. Coordinator
Division of Fish and Wildlife

THIS IS NOT A PERMIT

State of Indiana
DEPARTMENT OF NATURAL RESOURCES
Division of Fish and Wildlife
Early Coordination/Environmental Assessment

DNR #: ER-23284 **Request Received:** December 15, 2020

Requestor: Crawford Murphy and Tilly Inc
Cassie Reiter
8790 Purdue Road
Indianapolis, IN 46268-6128

Project: SR 45 added travel lanes, from SR 46 to about 1000' west of Pete Ellis Drive/Discovery Parkway, Bloomington; Des #1800086, CMT #18070904-14

County/Site info: Monroe

The Indiana Department of Natural Resources has reviewed the above referenced project per your request. Our agency offers the following comments for your information and in accordance with the National Environmental Policy Act of 1969.

If our agency has regulatory jurisdiction over the project, the recommendations contained in this letter may become requirements of any permit issued. If we do not have permitting authority, all recommendations are voluntary.

Regulatory Assessment: Formal approval by the Department of Natural Resources under the regulatory programs administered by the Division of Water is not required for this project.

Natural Heritage Database: The Natural Heritage Program's data have been checked.
To date, no plant or animal species listed as state or federally threatened, endangered, or rare have been reported to occur in the project vicinity.

Fish & Wildlife Comments: The measures below should be implemented to avoid, minimize, or compensate for impacts to fish, wildlife, and botanical resources:
1. Revegetate all bare and disturbed areas with a mixture of grasses (excluding all varieties of tall fescue) and legumes as soon as possible upon completion; low endophyte tall fescue may be used in the ditch bottom and side slopes only.
2. Minimize and contain within the project limits all tree and brush clearing.
3. Do not cut any trees suitable for Indiana bat or Northern Long-eared bat roosting (greater than 5 inches dbh, living or dead, with loose hanging bark, or with cracks, crevices, or cavities) from April 1 through September 30.
4. Appropriately designed measures for controlling erosion and sediment must be implemented to prevent sediment from entering the stream or leaving the construction site; maintain these measures until construction is complete and all disturbed areas are stabilized.
5. Plant five trees, at least 2 inches in diameter-at-breast height, for each tree which is removed that is ten inches or greater in diameter-at-breast height.

Contact Staff: Christie L. Stanifer, Environ. Coordinator, Fish & Wildlife
Our agency appreciates this opportunity to be of service. Please contact the above staff member at (317) 232-4080 if we can be of further assistance.

Christie L. Stanifer **Date:** January 13, 2021

Christie L. Stanifer
Environ. Coordinator
Division of Fish and Wildlife

Organization and Project Information

Project ID: 18070904-10
Des. ID: 1800199
Project Title: State Road 45 Intersection Improvement at Pete Ellis Drive/North Range Road
Name of Organization: Crawford, Murphy, & Tilly
Requested by: Cassie Reiter

Environmental Assessment Report

1. Geological Hazards:
    - Potential Karst
2. Mineral Resources:
    - Bedrock Resource: High Potential
    - Sand and Gravel Resource: None documented in the area
3. Active or abandoned mineral resources extraction sites:
    - None documented in the area

*All map layers from Indiana Map (maps.indiana.edu)

DISCLAIMER:

This document was compiled by Indiana University, Indiana Geological Survey, using data believed to be accurate; however, a degree of error is inherent in all data. This product is distributed "AS-IS" without warranties of any kind, either expressed or implied, including but not limited to warranties of suitability to a particular purpose or use. No attempt has been made in either the design or production of these data and document to define the limits or jurisdiction of any federal, state, or local government. The data used to assemble this document are intended for use only at the published scale of the source data or smaller (see the metadata links below) and are for reference purposes only. They are not to be construed as a legal document or survey instrument. A detailed on-the-ground survey and historical analysis of a single site may differ from these data and this document.

This information was furnished by Indiana Geological Survey
Address: 420 N. Walnut St., Bloomington, IN 47404
Email: IGSEnvir@indiana.edu
Phone: 812 855-7428

Date: August 05, 2019

Copyright © 2015 The Trustees of Indiana University, Copyright Complaints

Privacy Notice

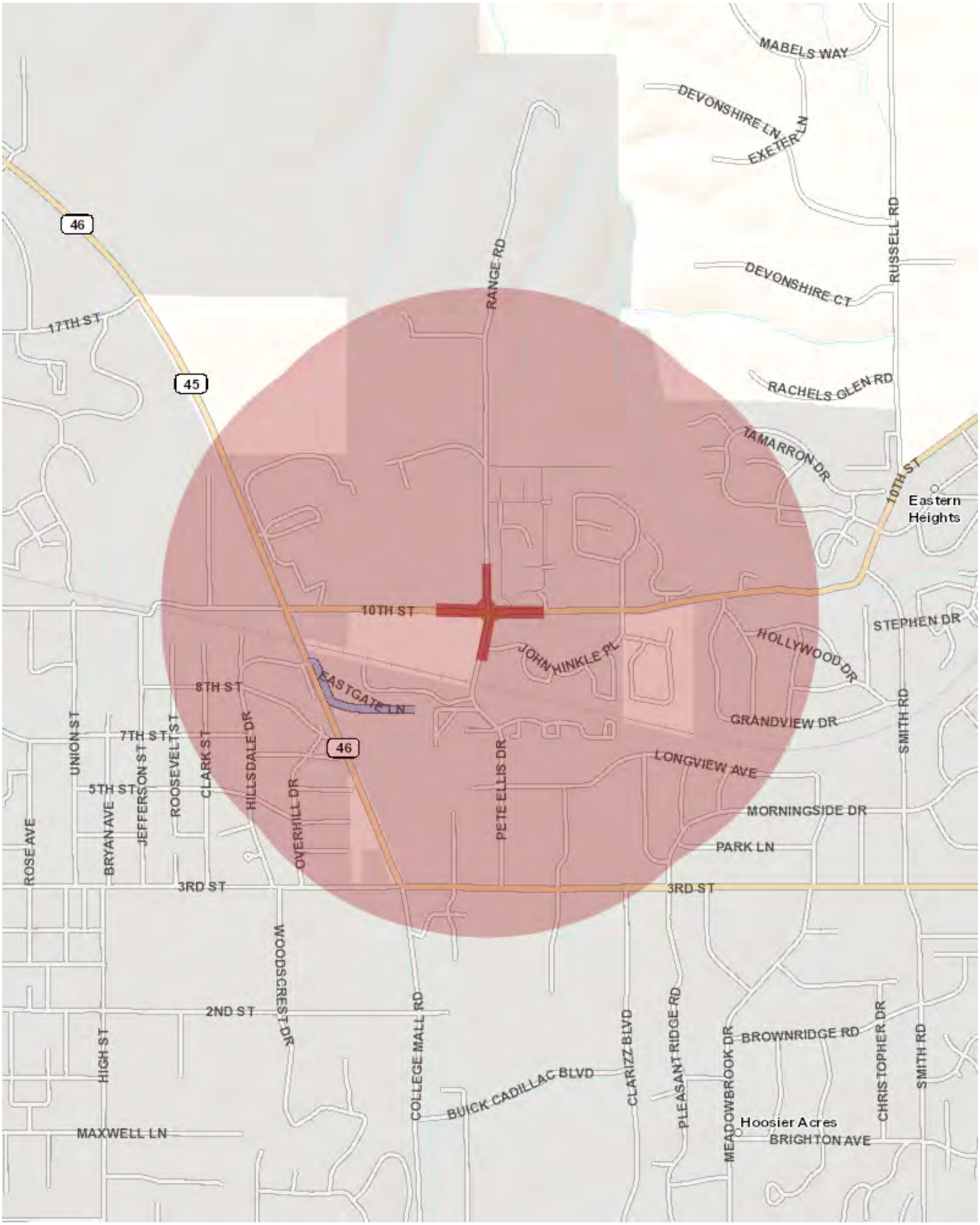

Copyright © 2015 The Trustees of Indiana University, Copyright Complaints

Privacy Notice

Metadata:

- https://maps.indiana.edu/metadata/Hydrology/Karst_Sinkhole_Areas.html
- https://maps.indiana.edu/metadata/Geology/Bedrock_Geology.html

Copyright © 2015 The Trustees of Indiana University, Copyright Complaints

Privacy Notice

Organization and Project Information

Project ID: 18070904-14
Des. ID: 1800086
Project Title: SR 45 Added Travel Lane
Name of Organization: Crawford, Murphy & Tilly
Requested by: Cassie Reiter

Environmental Assessment Report

1. Geological Hazards:
    - Potential Karst
2. Mineral Resources:
    - Bedrock Resource: High Potential
    - Sand and Gravel Resource: None documented in the area
3. Active or abandoned mineral resources extraction sites:
    - None documented in the area

*All map layers from Indiana Map (maps.indiana.edu)

DISCLAIMER:

This document was compiled by Indiana University, Indiana Geological Survey, using data believed to be accurate; however, a degree of error is inherent in all data. This product is distributed "AS-IS" without warranties of any kind, either expressed or implied, including but not limited to warranties of suitability to a particular purpose or use. No attempt has been made in either the design or production of these data and document to define the limits or jurisdiction of any federal, state, or local government. The data used to assemble this document are intended for use only at the published scale of the source data or smaller (see the metadata links below) and are for reference purposes only. They are not to be construed as a legal document or survey instrument. A detailed on-the-ground survey and historical analysis of a single site may differ from these data and this document.

This information was furnished by Indiana Geological Survey
Address: 420 N. Walnut St., Bloomington, IN 47404
Email: IGSEnvir@indiana.edu
Phone: 812 855-7428

Date: December 15, 2020

Copyright © 2015 The Trustees of Indiana University, Copyright Complaints

Privacy Notice

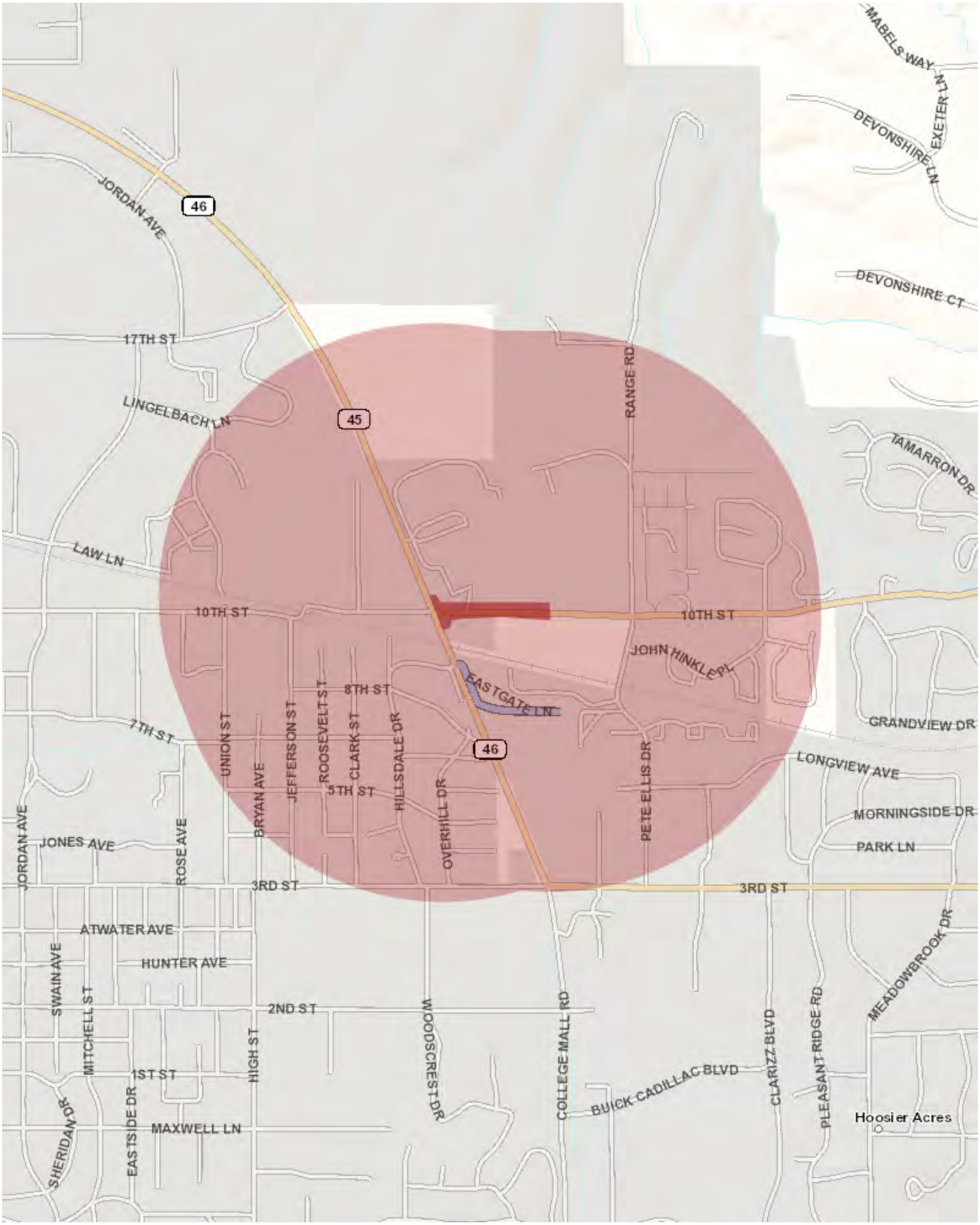

Copyright © 2015 The Trustees of Indiana University, Copyright Complaints

Privacy Notice

Metadata:

- https://maps.indiana.edu/metadata/Hydrology/Karst_Sinkhole_Areas.html
- https://maps.indiana.edu/metadata/Geology/Bedrock_Geology.html

Copyright © 2015 The Trustees of Indiana University, Copyright Complaints

Privacy Notice

Ellen Hogrebe

From: McWilliams, Robin <robin_mcwilliams@fws.gov>
Sent: Tuesday, August 6, 2019 9:29 AM
To: Ellen Hogrebe
Subject: Re: [EXTERNAL] Early Coordination Letter: SR 45 & Pete Ellis Drive/North Range Road Intersection # 1800199

Dear Ellen,

This responds to your recent letter, requesting our comments on the aforementioned project.

These comments have been prepared under the authority of the Fish and Wildlife Coordination Act (l6 U.S.C. 661 et. seq.) and are consistent with the intent of the National Environmental Policy Act of l969, the Endangered Species Act of l973, and the U. S. Fish and Wildlife Service's Mitigation Policy.

The project is within the range of the Indiana bat (*Myotis sodalis*) and northern long-eared bat (*Myotis septentrionalis*) and should follow the new Indiana bat/northern long-eared bat programmatic consultation process, if applicable (*i.e*. a federal transportation nexus is established). We will review that information once it is received.

Based on a review of the information you provided, the U.S. Fish and Wildlife Service has no objections to the project as currently proposed. However, should new information arise pertaining to project plans or a revised species list be published, it will be necessary for the Federal agency to reinitiate consultation. Standard recommendations are provided below.

The project is in the karst area of Indiana. If any karst features are encountered, a karst survey should be conducted, with mitigation measures as necessary, in accordance with our 1993 Memorandum of Understanding.

We appreciate the opportunity to comment at this early stage of project planning. If project plans change such that fish and wildlife habitat may be affected, please recoordinate with our office as soon as possible. If you have any questions about our recommendations, please call (812) 334-4261 x. 207.

Sincerely,
Robin McWilliams Munson

Standard Recommendations:

1. Do not clear trees or understory vegetation outside the construction zone boundaries. (**This restriction is not related to the tree clearing restriction for potential Indiana Bat habitat.)**

2. Restrict below low-water work in streams to placement of culverts, piers, pilings and/or footings, shaping of the spill slopes around the bridge abutments, and placement of riprap.

Culverts should span the active stream channel, should be either embedded or a 3-sided or open-arch culvert, and be installed where practicable on an essentially flat slope. When an open-bottomed culvert or arch is used in a stream, which has a good natural bottom substrate, such as gravel, cobbles and boulders, the existing substrate should be left undisturbed beneath the culvert to provide natural habitat for the aquatic community.

3. Restrict channel work and vegetation clearing to the minimum necessary for installation of the stream crossing structure.

4. Minimize the extent of hard armor (riprap) in bank stabilization by using bioengineering techniques whenever possible. If rip rap is utilized for bank stabilization, extend it below low-water elevation to provide aquatic habitat.

5. Implement temporary erosion and sediment control methods within areas of disturbed soil. All disturbed soil areas upon project completion will be vegetated following INDOT's standard specifications.

6. Avoid all work within the inundated part of the stream channel (in perennial streams and larger intermittent streams) during the fish spawning season (April 1 through June 30), except for work within sealed structures such as caissons or cofferdams that were installed prior to the spawning season. No equipment shall be operated below Ordinary High Water Mark during this time unless the machinery is within the caissons or on the cofferdams.

7. Evaluate wildlife crossings under bridge/culverts projects in appropriate situations. Suitable crossings include flat areas below bridge abutments with suitable ground cover, high water shelves in culverts, amphibian tunnels and diversion fencing.

Robin McWilliams Munson

U.S. Fish and Wildlife Service
620 South Walker Street
Bloomington, Indiana 46403
812-334-4261 x. 207 Fax: 812-334-4273

Monday, Tuesday - 7:30a-3:00p
Wednesday, Thursday - telework 8:30a-3:00p

On Mon, Aug 5, 2019 at 1:11 PM Ellen Hogrebe <ehogrebe@cmtengr.com> wrote:

Dear Interested Party,

The Indiana Department of Transportation intends to proceed with a project involving the intersection of SR 45 and Pete Ellis Drive in Bloomington, Monroe County, Indiana (INDOT Des No.: 1800199). Please see the attached letter, which is part of the early coordination phase of the environmental review process. We are requesting comments from your area of expertise regarding any possible environmental effects associated with this project. We will incorporate your comments into a study of the project's environmental impacts.

If you have any questions or concerns regarding this matter, please feel free to contact me at 314-571-9103 or via e-mail. Thank you for your assistance, and we look forward to your response.

Thank you,

United States Department of Agriculture

Natural Resources Conservation Service
Indiana State Office
6013 Lakeside Boulevard
Indianapolis, IN 46278
317-290-3200

August 30, 2019

Cassie Reiter
Crawford, Murphy & Tilly, Inc.
8790 Purdue Road
Indianapolis, Indiana 46268

Dear Ms. Reiter:

The proposed project to make intersection improvements at State Road 45 and Pete Ellis Drive/North Range Road in Bloomington, Monroe County (Des No. 1800199), as referred to in your letter received August 5, 2019, will not cause a conversion of prime farmland.

If you need additional information, please contact Daniel Phillips at 317-295-5871.

Sincerely,

JERRY RAYNOR
State Conservationist

Helping People Help the Land.

USDA is an equal opportunity provider, employer and lender.

Indiana Department of Environmental Management
We Protect Hoosiers and Our Environment.
100 N. Senate Avenue • Indianapolis, IN 46204
(800) 451-6027 • (317) 232-8603 • www.idem.IN.gov
Eric J. Holcomb
Governor
Bruno Pigott
Commissioner

September 5, 2019

66-33
NS Services Environmental Infrastructure
Attention: Cassie Reiter
8790 Purdue Road
Indianapolis, Indiana 46268

Dear Cassie Reiter,

RE: Wellhead Protection Area
Proximity Determination
Des No 1800199
City of Bloomington 2nd- Bloomfield
Multimodal Safety Improvements
Project in Seymour District,
Bloomington,
Monroe County, Indiana

Upon review of the above referenced project site, it has been determined that the proposed project area **is not located within** a Wellhead Protection Area. The information is accurate to the best of our knowledge; however, there are in some cases a few factors that could impact the accuracy of this determination. Some Wellhead Protection Area Delineations have not been submitted, and many have not been approved by this office. In these cases we use a 3,000 foot fixed radius buffer to make the proximity determination. To find the status of a Public Water Supply System's (PWSS's) Wellhead Protection Area Delineation please visit our tracking database at http://www.in.gov/idem/cleanwater/2456.htm and scroll to the bottom of the page.

Note: the Drinking Water Branch has launched a new self service feature which allows one to determine wellhead proximity without submitting the application form. Use the following instructions:

1. Go to http://idemmaps.idem.in.gov/whpa2/
2. Use the search tool located in the upper left hand corner of the application to zoom to your site of interest by way of city, county, or address; or use the mouse to click on the site of interest displayed on the map.
3. Once the site of interest has been located and selected, use the print tool to create a .pdf of a wellhead protection area proximity determination response.

In the future please consider using this self service feature if it is suits your needs.

If you have any additional questions please feel free to contact me at the address above or at (317) 233-9158 and aturnbow@idem.in.gov.

Sincerely,

Alisha Turnbow

Alisha Turnbow,
Environmental Manager
Ground Water Section
Drinking Water Branch
Office of Water Quality

A State that Works

Please Reduce, Reuse, Recycle

Ellen Hogrebe

From: Wright, Mary <MWRIGHT@indot.IN.gov>
Sent: Monday, August 5, 2019 1:49 PM
To: Ellen Hogrebe
Subject: RE: Early Coordination Letter: SR 45 & Pete Ellis Drive/North Range Road Intersection #1800199

Early Coordination and Creating a Public Involvement Plan (PIP)

We have received your early coordination notification packet for the above referenced project(s). Our office prefers to be notified at the early coordination stage in order to encourage early and ongoing public involvement aside from the specific legal requirements as outlined in our Public Involvement Manual http://www.in.gov/indot/2366.htm . Seeking the public's understanding of transportation improvement projects early in the project development stage can allow the opportunity for the public to express their concerns, comments, and to seek buy-in. Early coordination is the perfect opportunity to examine the proposed project and its impacts to the community along with the many ways and or tools to inform the public of the improvements and seek engagement. A good public involvement plan, or PIP, should consider the type, scope, impacts, and the level of public awareness that should, or could, be implemented. In other words, although there are cases where no public involvement is legally required, sometimes it is simply the right thing to do in order to keep the public informed.

The public involvement office is always available to provide support and resources to bolster any public involvement activities you may wish to implement or discuss. Please feel free to contact our office anytime should you have any questions or concerns. Thank you for notifying our office about your proposed project. We trust you will not only analyze the appropriate public involvement required, but also consider the opportunity to do go above and beyond those requirements in creating a good PIP.

Rickie Clark, Manager
100 North Senate Avenue, Room N642
Indianapolis, IN 46204

Phone: 317-232-6601
Email: rclark@indot.in.gov

Mary Wright, Hearing Examiner
Phone: 317-234-0796
Email: mwright@indot.in.gov

From: Ellen Hogrebe [mailto:ehogrebe@cmtengr.com]
Sent: Monday, August 05, 2019 1:29 PM
To: Clark, Rickie <RCLARK@indot.IN.gov>
Cc: Wright, Mary <MWRIGHT@indot.IN.gov>
Subject: Early Coordination Letter: SR 45 & Pete Ellis Drive/North Range Road Intersection #1800199

Dear Interested Party,

Ellen Hogrebe

From: Neil Kopper <koppern@bloomington.in.gov>
Sent: Tuesday, August 27, 2019 11:04 AM
To: Ellen Hogrebe
Subject: Re: Early Coordination Letter: SR 45 & Pete Ellis Drive/North Range Road Intersection #1800199

Thank you for accepting comments for early coordination of the SR45/Pete Ellis/Range (Des 1800199) project. The City of Bloomington is very interested in this project because it affects City operations/infrastructure and appears to utilize City right of way. In general the City is supportive of this project and hopes to work collaboratively with INDOT to ensure the best possible design.

The City particularly requests equitable treatment for all modes of transportation with this project. While the primary intent of the project appears to be increasing motor vehicle capacity, it is essential that those updates do not come at the expense of safety and mobility for vulnerable road users (e.g. pedestrians and bicyclists). We appreciate initial coordination from INDOT on the project and ask that they continue to pursue updates to maximize safety and mobility for all users of the right of way.

The City's primary concern, based on initial discussions with INDOT, relates to the need for multiuse path on the east side of the north leg of the intersection. It is essential to include this multiuse path. Multiuse path is being installed along the north side of Range (where it's oriented east-west). Multiuse path is existing on the east side of Pete Ellis. That leaves a short gap in the facility on the east side of Range (where it's oriented north-south). The City's adopted Transportation Plan requires multiuse path along Range Rd and we are actively working to complete that connection in order to have access to the new hospital location. The City cannot agree to an infrastructure project that would not only not install the planned path, but also likely make installation of that path significantly more challenging as a result of spatial and grade constraints imposed by widening the road. Prohibiting a safe and accessible pedestrian and bicycle connection will impose unacceptable conditions on anyone traveling in the area outside a motor vehicle. I hope we can all agree that this project should not prohibit safe and accessible pedestrian and bicycle transportation to and from Bloomington's hospital. Historically, large transportation infrastructure projects have divided communities and unfairly impacted disadvantaged members of society. There are many reasons why this multiuse path connection is essential, but perhaps most relevant for this environmental review is the need to avoid negatively impacting pedestrians and bicyclists (many of whom use those modes of transportation because they are already disadvantaged and are unable to own or unable to operate a motor vehicle).

As I'm sure you're aware, INDOT's Complete Street Policy notes that "...integrating sidewalks, bike facilities, transit amenities, and/or safe crossings into the initial design of a project spares the expense and complications of later retrofits. We ask that all work within the project limits comply with accessibility requirements, adopted City plans, and best practices for transportation infrastructure in an urban, multimodal environment.

Please also note that, as with any other work in City right of way, some areas of this construction will require a permit and approval by the City's Board of Public Works.

Thank you,
- Neil

--
Neil Kopper, PE
Interim Transportation and Traffic Engineer
City of Bloomington | (812) 349-3423
401 N. Morton St., Suite 130 | Bloomington, IN 47404

---------- Forwarded message ---------
From: **Ellen Hogrebe** <ehogrebe@cmtengr.com>
Date: Mon, Aug 5, 2019 at 1:37 PM
Subject: Early Coordination Letter: SR 45 & Pete Ellis Drive/North Range Road Intersection #1800199
To: council@bloomington.in.gov <council@bloomington.in.gov>

Dear Interested Party,

The Indiana Department of Transportation intends to proceed with a project involving the intersection of SR 45 and Pete Ellis Drive/North Range Road in Bloomington, Monroe County, Indiana (INDOT Des No.: 1800199). Please see the attached letter, which is part of the early coordination phase of the environmental review process. We are requesting comments from your area of expertise regarding any possible environmental effects associated with this project. We will incorporate your comments into a study of the project's environmental impacts.

If you have any questions or concerns regarding this matter, please feel free to contact me at 314-571-9103 or via e-mail. Thank you for your assistance, and we look forward to your response.

Thank you,

ELLEN HOGREBE | Environmental Scientist

Crawford, Murphy & Tilly | **Engineers & Consultants**
8790 Purdue Road| Indianapolis, IN 46268
w 314.571.9103 | m 419.350.1271 | f 314.436.0723 | ehogrebe@cmtengr.com

Centered in Value

--
Office of the Common Council
City of Bloomington
401 N. Morton, P.O. Box 100
Bloomington, Indiana 47402
(v:) 812.349.3409 (f:) 812.349.3570 (e:)council@bloomington.in.gov
www.bloomington.in.gov/council

Ellen Hogrebe

From: Adam Wason <wasona@bloomington.in.gov>
Sent: Friday, March 20, 2020 8:26 AM
To: Metcalf, Karlei A
Cc: Wahlman, Chris; Neil Kopper; mayor@bloomington.in.gov; craig.shonkwiler@bloomington.in.gov; Cassie Reiter; Mcclellan, Tony
Subject: Re: SR45 & Pete Ellis Intersection Improvement Meeting

External Message: *This email was sent from someone outside of CMT. Please use caution with links and attachments from unknown senders or receiving unexpected emails.*

All,

Many thanks to all for this coordination.

Be well,
Adam

Adam Wason

Director, Public Works Department
City of Bloomington, IN
wasona@bloomington.in.gov
812.349.3516
bloomington.in.gov

On Fri, Mar 20, 2020 at 9:13 AM Metcalf, Karlei A <KMetcalf1@indot.in.gov> wrote:

Hi Neil,

We have reviewed your suggested changes below and feel that we can accommodate those requests in our current project. We originally planned to have 6ft sidewalk at this intersection and extending it to 10ft will not require much additional costs. This alternative is something INDOT can provide and we will cover the costs. There will be no additional funding required from the City of Bloomington for this alternative.

If you have any questions, please let me know.

Thanks!

Karlei Metcalf, PMP
Project Manager

185 Agrico Lane

Seymour, IN 47274

Office: (812) 524-3792

Cell: (812) 525-1748

Email: KMetcalf1@indot.in.gov

From: Wahlman, Chris <CWAHLMAN@indot.IN.gov>
Sent: Thursday, March 19, 2020 3:26 PM
To: Neil Kopper <koppern@bloomington.in.gov>
Cc: mayor@bloomington.in.gov; craig.shonkwiler@bloomington.in.gov; wasona@bloomington.in.gov; Metcalf, Karlei A <KMetcalf1@indot.IN.gov>; Cassie Reiter <creiter@cmtengr.com>; Mcclellan, Tony <TMcclellan@indot.IN.gov>
Subject: RE: SR45 & Pete Ellis Intersection Improvement Meeting

Thanks for the reply, Neil. We will have our consultant take a look at the suggested changes and get back with you.

Thanks,

Chris Wahlman, P.E.
Capital Program Management Director

INDOT Seymour District

185 Agrico Lane

Seymour, IN 47274

Office: (812) 524-3732

Cell: (812) 528-1476

Email: cwahlman@indot.in.gov

From: Neil Kopper <koppern@bloomington.in.gov>
Sent: Thursday, March 19, 2020 1:56 PM
To: Wahlman, Chris <CWAHLMAN@indot.IN.gov>
Cc: mayor@bloomington.in.gov; craig.shonkwiler@bloomington.in.gov; wasona@bloomington.in.gov; Metcalf, Karlei A <KMetcalf1@indot.IN.gov>; Cassie Reiter <creiter@cmtengr.com>; Mcclellan, Tony <TMcclellan@indot.IN.gov>
Subject: Re: SR45 & Pete Ellis Intersection Improvement Meeting

**** This is an EXTERNAL email. Exercise caution. DO NOT open attachments or click links from unknown senders or unexpected email. ****

Hi Chris, thank you for sending this email and I apologize for our delayed response. I will try to describe the City's preferences below, but please let me know if you have additional questions.

The exhibit from your 2/14 email shows the path extending to the northern limit of the road work. While that would be ideal, our primary desire for now is to have the path included at the intersection itself. We want to be sure that the widening and utility relocations planned for the intersection work do not make it more challenging/expensive to extend the path to the north in the future. We believe that including path width between the two curb ramps at this corner and only a short stub heading north will suffice (very rough sketch below - essentially just stay within the limits already shown to have a sidewalk and widen it a few feet to multiuse path width). It appears that this amount of work would be enough to avoid costly replacements as the City implements its plans in the future.

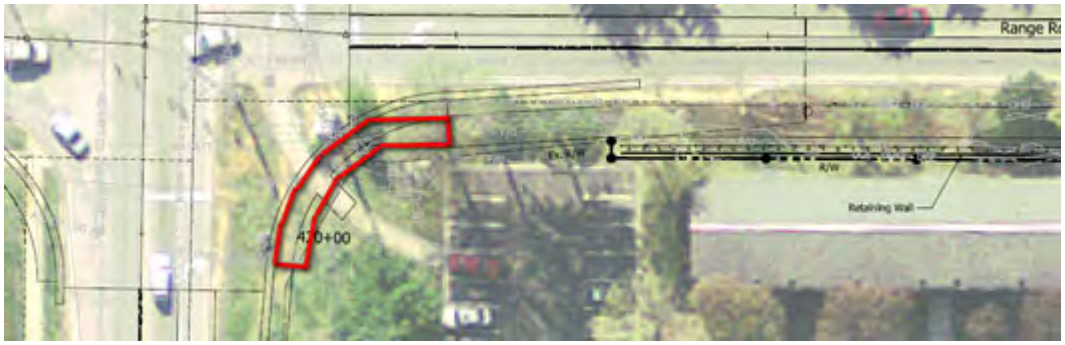

I am hopeful that this adjustment will make it much more feasible for INDOT to include the work as a part of the project.

Thank you for coordinating with us on this project and please let me know if my suggestions above raise any new concerns.

- Neil

On Wed, Mar 18, 2020 at 3:21 PM Wahlman, Chris <CWAHLMAN@indot.in.gov> wrote:

> Hope this message finds all of you well. Recent events have thrown a wrench in a lot of meetings and events in March.
>
> As we near the 20th – does the City have any comments/concerns with the partnering proposal put forth below? To date, I have not heard any response from any of the City officials on this matter, so wanted to check base with you all.
>
> Please let us know if we can answer any questions or be of further assistance.
>
> Thanks,
>
> **Chris Wahlman, P.E.**
> ***Capital Program Management Director***
>
> ***INDOT Seymour District***
>
> 185 Agrico Lane
>
> Seymour, IN 47274
>
> **Office:** (812) 524-3732
>
> **Cell:** (812) 528-1476
>
> **Email:** cwahlman@indot.in.gov

From: Wahlman, Chris
Sent: Friday, February 14, 2020 9:25 AM
To: mayor@bloomington.in.gov; craig.shonkwiler@bloomington.in.gov; wasona@bloomington.in.gov; Neil Kopper <koppern@bloomington.in.gov>
Cc: Metcalf, Karlei A <KMetcalf1@indot.IN.gov>; Cassie Reiter <creiter@cmtengr.com>; Mcclellan, Tony <TMcclellan@indot.IN.gov>
Subject: FW: SR45 & Pete Ellis Intersection Improvement Meeting

All,

INDOT and our design consultant firm Crawford, Murphy, and Tilly (CMT) are developing plans for the intersection improvement at SR45 and Pete Ellis Drive. During development, the City had requested to add a shared use path to this project along the east side of Range Rd/Discovery Pkwy north of the intersection as shown in the attached schematic drawing. Additional project costs associated with this scope addition are detailed in the email chain below and would be the responsibility of the City should we enter into a partnering agreement. It should be noted that the desired location of the shared use path has a considerable impact on utilities which in turn contributes a significant amount to the added cost.

We are at a stage in plan development where we need to make some final decisions on these additional scope elements if the City still wishes to partner with INDOT on this project. We would like to have this decision finalized by March 20 if possible in order to keep the project on schedule for bid letting in early 2023.

We are more than happy to meet with City officials in the coming days and weeks to help talk through this and what options we may have going forward.

Thanks, and have a great weekend.

Chris Wahlman, P.E.
Capital Program Management Director

INDOT Seymour District

185 Agrico Lane

Seymour, IN 47274

Office: (812) 524-3732

Cell: (812) 528-1476

Email: cwahlman@indot.in.gov

From: Metcalf, Karlei A <KMetcalf1@indot.IN.gov>
Sent: Friday, February 07, 2020 12:48 PM
To: Wahlman, Chris <CWAHLMAN@indot.IN.gov>
Subject: FW: SR45 & Pete Ellis Intersection Improvement Meeting

SR45 and Pete Ellis Intersection

Karlei Metcalf, PMP
Project Manager

185 Agrico Lane

Seymour, IN 47274

Office: (812) 524-3792

Cell: (812) 525-1748

Email: KMetcalf1@indot.in.gov

From: Metcalf, Karlei A
Sent: Monday, January 27, 2020 7:24 AM
To: Neil Kopper <koppern@bloomington.in.gov>
Cc: atenro@bloomington.in.gov; Craig Shonkwiler <craig.shonkwiler@bloomington.in.gov>
Subject: RE: SR45 & Pete Ellis Intersection Improvement Meeting

Hi Neil,

Have you had a chance to review these fees and determine if the City of Bloomington would like to partner with INDOT on this project or not? We are holding stage 1 until we get a more definite answer from the City but we can't let this project delay too long due to all of the different factors in this project – right of way acquisition, historical impacts and environmental, utility relocations, etc.

Thanks!

Karlei Metcalf, PMP
Project Manager

185 Agrico Lane

Seymour, IN 47274

Office: (812) 524-3792

Cell: (812) 525-1748

Email: KMetcalf1@indot.in.gov

From: Metcalf, Karlei A
Sent: Friday, January 10, 2020 8:29 AM
To: Neil Kopper <koppern@bloomington.in.gov>
Cc: atenro@bloomington.in.gov; Craig Shonkwiler <craig.shonkwiler@bloomington.in.gov>
Subject: RE: SR45 & Pete Ellis Intersection Improvement Meeting

Hi Neil,

We don't have complete stage 1 plans at this point because we are waiting to see what we decide with the trail. This is a high level plan of what we will be doing at the intersection. Hopefully this will help.

And you should have received plans from Zach regarding the other intersection project at SR45/SR46.

Please let me know if the City will want to partner with INDOT or not as soon as you can.

Thanks!

Karlei Metcalf, PMP
Project Manager

185 Agrico Lane

Seymour, IN 47274

Office: (812) 524-3792

Cell: (812) 525-1748

Email: KMetcalf1@indot.in.gov

From: Neil Kopper [mailto:koppern@bloomington.in.gov]
Sent: Wednesday, January 8, 2020 2:09 PM
To: Metcalf, Karlei A <KMetcalf1@indot.IN.gov>
Cc: atenro@bloomington.in.gov; Craig Shonkwiler <craig.shonkwiler@bloomington.in.gov>
Subject: Re: SR45 & Pete Ellis Intersection Improvement Meeting

**** This is an EXTERNAL email. Exercise caution. DO NOT open attachments or click links from unknown senders or unexpected email. ****

Thanks Karlei. I will have to run this above my head for a response. Can you send us the most current set of plans for this project so we can get a better understanding?

Also, on a related topic, INDOT has started construction of the intersection project on the other end of Range Rd (at SR 45/SR 46). The project uses City streets during construction and constructs infrastructure that will be City-owned, but we have never seen a copy of the final plans. Can you also help us by sending a copy of those?

Thanks,

- Neil

On Wed, Jan 8, 2020 at 1:36 PM Metcalf, Karlei A <KMetcalf1@indot.in.gov> wrote:

Hi Neil and Roy,

I hope you both had a nice Christmas and Happy New Year. I have worked with Cassie at CMT and some folks at the district regarding the costs of adding a trail on the east side of Range Road. I have included these costs below. If the City is interested in partnering with INDOT on this project, please let me know. We can set up a meeting to discuss this further if you would like.

Estimate of cost:

- *Shared-Use Path Construction Cost Estimate = $165,000*
- *Shared-Use Path R/W Cost Estimate = $24,000*
- *Shared-Use Path Utility Cost Estimate = $336,000*
- *10% Contingency = $52,500*

Total Est. = $577,500

Then if becomes a part of this project, there would be an added cost for design, ROW engineering, utility coordination, env doc, etc. Without putting hours to that, we could estimate that to be about 15% of the construction cost, so an additional $86,000 for **a new total of about $665,000.**

Due to the amount of utilities on the east side, and considering that Duke will position to be reimbursable since they just relocated & will need to relocate again within 5 years, and the amount of AT&T infrastructure, the cost for utilities is nearly double the cost of the trail itself. Bloomington may want to consider putting a trail in on the west side of Range Road instead.

As I said above and we have discussed before, these estimates are for what it would cost the City to partner with INDOT.

Thanks!

Karlei Metcalf, PMP
Project Manager

185 Agrico Lane

Seymour, IN 47274

Office: (812) 524-3792

Cell: (812) 525-1748

Email: KMetcalf1@indot.in.gov

--

Neil Kopper, PE

Senior Project Engineer
City of Bloomington | (812) 349-3423
401 N. Morton St., Suite 130 | Bloomington, IN 47404

--

Neil Kopper, PE

Senior Project Engineer
City of Bloomington | (812) 349-3423
401 N. Morton St., Suite 130 | Bloomington, IN 47404

Ellen Hogrebe

From: Steve Cotter <cotters@bloomington.in.gov>
Sent: Friday, July 17, 2020 9:57 AM
To: Ellen Hogrebe
Cc: Erin Hatch
Subject: Re: Early Coordination Letter: SR 45 & Pete Ellis Drive/North Range Road Intersection #1800199

External Message: *This email was sent from someone outside of CMT. Please use caution with links and attachments from unknown senders or receiving unexpected emails.*

Hi Ellen,

Thank you for following up on this. I forwarded your first email to the BPR Urban Forester regarding impacts to the street trees on Pete Ellis south of this intersection. I didn't hear back from him and he has since retired. I have cc'd Erin Hatch, the current Urban Forester, to see if she has any concerns. The sidepaths in town are not managed by the Parks Dept. I will forward this email to the Planning and Transportation Dept. to see if they have any concerns.

The intersection appears to be on the Griffy Lake watershed boundary so the Parks Dept. requests stringent erosion control requirements for the project to protect the water quality of the lake.

Thank you,
Steve Cotter

On Fri, Jul 17, 2020 at 10:35 AM Ellen Hogrebe <ehogrebe@cmtengr.com> wrote:

> Mr. Cotter,
>
> I wanted to follow-up on my early coordination email below regarding the project (Des No 1800199) at the intersection of SR 45 and Pete Ellis Drive/Discovery Parkway (formerly North Range Road) in Bloomington, Indiana.
>
> The Indiana Department of Transportation (INDOT) and Federal Highway Administration (FHWA) have programmed a project that will improve the intersection at State Road 45 (SR 45) and Pete Ellis Drive/Discovery Parkway. Due to the use of federal funds, the proposed transportation project is subject to the requirements of Section 4(f) of the *Department of Transportation (DOT) Act of 1966*, which affords protection to publicly-owned parks, recreation areas, and wildlife and waterfowl refuges. **The purpose of this correspondence is to document that the Official with Jurisdiction (in this case, you) concurs with the assessment of impacts to the Bloomington North Sidepath within the project area**. Your concurrence is critical to the project moving forward and will be reviewed by INDOT.
>
> This project is located at the SR 45 (10th Street) and Pete Ellis Drive/Discovery Parkway intersection. The project area includes SR 45 from approximately 0.2 mile east of the intersection to approximately 0.2 mile west of the intersection, and also includes Pete Ellis Drive from approximately 0.1 mile south of the intersection and Discovery Parkway from 0.1 mile north of the intersection. See the attached exhibit for the approximate project limits in red. The project will include providing exclusive left- and right-turn lanes on all approaches to the intersection, which will involve widening portions of SR 45, Pete Ellis Drive, and Discovery Parkway. Sidewalks within the project area will be reconstructed and a sidewalk extension will be constructed in the in the northeast corner of the intersection. A new traffic signal will be installed at the intersection, which will be equipped with Accessible Pedestrian Signals to accommodate new ADA ramps and crosswalks.
>
> ***Bloomington North Sidepath – 10th Street from Jefferson Street east to Pete Ellis Drive***

According to IndianaMap and the approved Bicycle and Pedestrian Transportation & Greenways System Plan March 2008, the Bloomington North Sidepath is managed by Bloomington Parks and Recreation Department. It presently runs east-west along the north side of SR 45 (between Jefferson Street east to Pete Ellis Drive) as a sidepath separated from the existing roadway.

The SR 45 and Pete Ellis Drive/Discovery Parkway project will require reconstructing portions of the sidepath in the northwest corner of the intersection in order to widen Discovery Parkway and SR 45. Appropriate detour signage will be installed along the sidepath to alert users of the construction activities.

In accordance with 23 CFR 774.13(f), the Bloomington North Sidepath appears to be a part of the local transportation system and functions primarily for transportation. If you concur with this assessment in regard to the proposed project, please indicate as such my responding accordingly to this email no later than fourteen (14) days from the date of this email.

Thank you for your time, and if you have any questions and/or concerns, please feel free to contact me.

ELLEN HOGREBE | Environmental Scientist

Crawford, Murphy & Tilly
w 314.571.9103 | m 419.350.1271

From: Ellen Hogrebe
Sent: Monday, August 5, 2019 12:41 PM
To: cotters@bloomington.in.gov
Subject: Early Coordination Letter: SR 45 & Pete Ellis Drive/North Range Road Intersection #1800199

Dear Interested Party,

The Indiana Department of Transportation intends to proceed with a project involving the intersection of SR 45 and Pete Ellis Drive/North Range Road in Bloomington, Monroe County, Indiana (INDOT Des No.: 1800199). Please see the attached letter, which is part of the early coordination phase of the environmental review process. We are requesting comments from your area of expertise regarding any possible environmental effects associated with this project. We will incorporate your comments into a study of the project's environmental impacts.

If you have any questions or concerns regarding this matter, please feel free to contact me at 314-571-9103 or via e-mail. Thank you for your assistance, and we look forward to your response.

Thank you,

ELLEN HOGREBE | Environmental Scientist

Ellen Hogrebe

From: Cassie Reiter
Sent: Wednesday, August 28, 2019 3:24 PM
To: Ellen Hogrebe
Cc: Kristin Timmons; Morgan Stumpf
Subject: FW: Your scan (Scan to My Email)
Attachments: scan_noliver_2019-08-19-11-44-21.pdf

FYI – school bus routes. We will need to take into consideration when we are looking at the MOT.

Cassie Reiter
Crawford, Murphy & Tilly | Engineers & Consultants

From: Oliver, Nathan D <noliver@mccsc.edu>
Sent: Monday, August 19, 2019 11:51 AM
To: Cassie Reiter <creiter@cmtengr.com>
Subject: Fw: Your scan (Scan to My Email)

Cassie,

Attached are scans of each route that uses the intersection at Hwy 45, Pete Ellis and Range Rd. There are multiple maps for the same route number, for instance route 142 access that intersection 4 different times a day. This is the reason for multiple maps for the same route number.

I f you need exact times that each route/bus is traveling through this intersection, I can do GPS reports and get those times for you.

Thank You,
Nathan Oliver
Director of Transportation
812-330-7719 ext-53410
"Perfection is not Attainable, but if we chase perfection we can catch excellence."
-- Vince Lombardi

From: Oliver, Nathan D <noliver@mccsc.edu>
Sent: Monday, August 19, 2019 11:44 AM

Ellen Hogrebe

From: Cassie Reiter
Sent: Tuesday, January 19, 2021 8:23 AM
To: Ellen Hogrebe; Kristin Timmons
Subject: FW: St. Rd. 45 & 46 Intersection

FYI for the EC response

CASSIE REITER | Crawford, Murphy & Tilly | w 317.492.9166 | m 317.223.6739
Project Manager

From: Oliver, Nathan D <noliver@mccsc.edu>
Sent: Tuesday, January 19, 2021 6:43 AM
To: Cassie Reiter <creiter@cmtengr.com>
Subject: St. Rd. 45 & 46 Intersection

External Message: *This email was sent from someone outside of CMT. Please use caution with links and attachments from unknown senders or receiving unexpected emails.*

Cassie Reiter,

I am writing you on behalf of Monroe County Community School Corporation (MCCSC) interest for the Highway 45 & 46 intersection construction. MCCSC has 15 routes that run through this corridor 4 times a day. MCCSC runs two tier bus routes, this means we run our High School / Middle School on one tier and then Elementary routes on the second tier. MCCSC has six Special Needs routes that run through this corridor. MCCSC transports 16 HS/MS students on the first tier and 28 Elementary students on the second tier each morning on these special needs routes. MCCSC has eight General Education routes that also travel through this corridor. MCCSC transports 306 HS/MS students on the first tier and 293 Elementary routes on the second tier. The first and second tiers run through this corrido between 6:00am and 9:00am. Then in the afternoon MCCSC runs the two tiers again starting at 3:00pm and finishing around 5:00pm.

I do want to add that all HS/MS students have to be at school by 7:45am in order to receive breakfast. All Elementary students have to be at school by 8:45am in order to receive breakfast each day.

Cassie thank you for your time and please let me know if there is anything else that I can provide for you.

Thank You,
Nathan Oliver
Director of Transportation
812-330-7719 ext-53410
"Perfection is not Attainable, but if we chase perfection we can catch excellence."
-- Vince Lombardi

Ellen Hogrebe

From: Lew May <mayl@bloomingtontransit.com>
Sent: Tuesday, December 15, 2020 10:29 AM
To: Ellen Hogrebe
Subject: Re: Early Coordination Letter: SR 45 Added Travel Lane Project #1800086

External Message: *This email was sent from someone outside of CMT. Please use caution with links and attachments from unknown senders or receiving unexpected emails.*

Hi Ellen

Thank you for the early coordination opportunity. This road segment is a major transit corridor so we very much would like the opportunity to talk with you about it and offer some suggestions to better accommodate public transportation service in the corridor.

Here's some days/time that would potentially work for me to talk further:

Friday, Dec. 18, afternoon
Monday, Jan. 4, any time
Tuesday, Jan. 5, afternoon
Wednesday, Jan 6, afternoon
Thursday, Jan. 7, morning
Friday, Jan. 8, any time

Let me know if any of those dates/times work for you and we can set up a cal or Zoom meeting.

Thanks so much.

Lew

Lew May
General Manager

Bloomington Public Transportation Corporation
130 W. Grimes Lane
Bloomington, IN 47403
812.332.5688 office

On Tue, Dec 15, 2020 at 10:20 AM Ellen Hogrebe <ehogrebe@cmtengr.com> wrote:

> Dear Interested Party,
>
> The Indiana Department of Transportation intends to proceed with a project involving adding a travel lane in both directions along SR 45 (10th Street), east of the SR 46 intersection in Bloomington, Monroe County, Indiana (INDOT Des No. 1800086). Please see the attached letter, which is part of the early coordination phase of the environmental

Indiana Department of Transportation
SR 45 & Pete Ellis Road – Des. No 1800199
SR 45 ATL – Des. No 1800086
Meeting with Bloomington Mass Transit

DATE: Jan 12, 2021 – 10:00 a.m.

LOCATION: Virtual Meeting - Teams

SUBJECT: SR 45 & Pete Ellis Road and SR 45 ATL project – in response to Early Coordination letters

ATTENDANCE:

Karlei Metcalf	INDOT Seymour Dist PM	317-467-3978	kmetcalf@indot.in.gov
Lew May	Bloomington Transit		mayl@bloomingtontransit.com
Zac Huneck	Bloomington Transit		huneckz@bloomingtontransit.com
Kristin Timmons	CMT		ktimmons@cmtengr.com
Cassie Reiter	CMT P.M.	317-492-9166	creiter@cmtengr.com

A discussion was held as an opportunity for Bloomington Transit (BT) to ask questions about the 2 projects. The following items were discussed.

Action items are highlighted.

Per BT, SR 45 is a major transit corridor in Bloomington. When there is no pandemic, there are approximately 5000 to 7000 riders on this route, which is about 100 busses per day along the SR 45 route. They would like our project to take measures to accommodate transit.

Per BT, the apartment complex owns the pavilion at the WB bus stop, east of Pete Ellis. At this stop, there can be 1-2 busses at a time. Currently, the lane is narrow for busses, which are 102" wide plus 1' on each side for mirrors = 10.5').

CMT indicated that the proposed lanes are 12' wide. BT was glad to hear this.

BT asked if this stop could move to the west (so busses aren't in the travel lane when stopping) or extend the bus lane further to the east. Need enough room to have 2 busses that are not extending into the travel lane, plus a location for the pavilion.

CMT indicated we could look into this.

Per BT, they would like to see concrete pavement at these stops, especially WB, since there are 100 busses per day. The buses can be detrimental to asphalt pavement.

On the EB stop, south side, east of Pete Ellis, there is a pull off lane for busses. However, BT would like to see the stop closer to the SR45 @ Pete Ellis intersection. This would more easily allow pedestrians to utilize the intersection crosswalks (rather than cut across SR 45 after getting off the bus). They do not want busses to block the intersection though. At this stop, there is typically only 1 bus at a time.

CMT indicated that we could look into this, and it is a high possibility this can be accommodated.

BT would like to have 2 new bus stops on Discovery Parkway, just north of SR 45. CMT explained that Discovery Parkway is not an INDOT route, and the lane widths, per the City, are 10' wide. BT indicates that people headed to & from the hospital need good transit access. BT will reach out to the City asap for this possibility. It was noted that this improvement would likely need to be cost-share.

BT would like to have a new bus stop NB at the SE corner of Pete Ellis at John Hinkle. CMT again explained that Pete Ellis is not an INDOT route. And therefore, BT will again need to reach out to the City asap for this possibility. It was noted that this improvement would likely need to be cost-share.

BT also discussed the bus stop EB at the Scholars Quad Apartments, east of SR 46. Currently, the 40' long bus blocks the apartment entrance drive. BT asked if the stop could be moved to the west.

CMT indicated that we would look into moving this bus stop to the west side of the Scholars Apartment building. This may have better grades for ADA accessibility. ADA accessibility would not be met if this bus stop was moved to the west side of the apartment entrance.

BT asked if there is a way to get a pedestrian crossing at this WB bus stop east of SR 46. The riders are from the Scholars Quad apartments and the IU buildings, which are all east of the current WB bus stop. BT also suggested moving this WB bus stop to the east, with the crosswalk, if possible.

CMT indicated that we would look into moving the bus stop and a pedestrian crossing.

Prepared By: Cassie Reiter, CMT

Please advise in writing of any corrections/additions to the minutes. If no written response is received within seven (7) days of receipt of these minutes, they will be considered approved as written.

Ellen Hogrebe

From: Patrick Martin <martipa@bloomington.in.gov>
Sent: Wednesday, December 16, 2020 9:57 AM
To: Ellen Hogrebe
Subject: Re: Early Coordination Letter: SR 45 Added Travel Lane Project #1800086

External Message: *This email was sent from someone outside of CMT. Please use caution with links and attachments from unknown senders or receiving unexpected emails.*

Good Morning Ellen,

The Bloomington-Monroe County Metropolitan Planning Organization (BMCMPO) fully supports the proposed SR 45 added travel lanes project from the intersection of the SR45-46 Bypass eastward to the to approximately 1,000 feet west of the SR 45 and Pete Ellis Drive/Discovery Parkway intersection (DES# 1800086).

We recognize the existence of the Historic Farm property along the south side of the corridor and understand that appropriate mitigation efforts are applicable for the construction of this project.

Please feel free to contact me if you should have any questions.

Thanks,

Pat Martin

On Tue, Dec 15, 2020 at 9:50 AM Ellen Hogrebe <ehogrebe@cmtengr.com> wrote:

> Dear Interested Party,
>
> The Indiana Department of Transportation intends to proceed with a project involving adding a travel lane in both directions along SR 45 (10th Street), east of the SR 46 intersection in Bloomington, Monroe County, Indiana (INDOT Des No. 1800086). Please see the attached letter, which is part of the early coordination phase of the environmental review process. We are requesting comments from your area of expertise regarding any possible environmental effects associated with this project. We will incorporate your comments into a study of the project's environmental impacts.
>
> Thank you for your assistance, and we look forward to your response.
>
> Thank you,
>
> **ELLEN HOGREBE** | Environmental Scientist

Crawford, Murphy & Tilly | **Engineers & Consultants**
8790 Purdue Road| Indianapolis, IN 46268
w 314.571.9103 | m 419.350.1271 | f 314.436.0723 | ehogrebe@cmtengr.com

Centered in Value

--

Patrick P. Martin | Senior Transportation Planner
City of Bloomington IN | Planning and Transportation Department
p 812.349.3530 | e **martipa@bloomington.in.gov**

Ellen Hogrebe

From: Ellen Hogrebe
Sent: Wednesday, December 16, 2020 10:59 AM
To: Terry Quillman
Cc: Paul Satterly
Subject: RE: Early Coordination Letter: SR 45 Added Travel Lane Project #1800086

Mr. Quillman,

Thank you for your response. We will be able to provide that information when we submit for the Rule 5 permit.

Please let me know if you have any further questions,

ELLEN HOGREBE | Environmental Scientist
Crawford, Murphy & Tilly
w 314.571.9103 | m 419.350.1271

From: Terry Quillman <tquillman@co.monroe.in.us>
Sent: Tuesday, December 15, 2020 1:22 PM
To: Ellen Hogrebe <ehogrebe@cmtengr.com>
Cc: Paul Satterly <psatterly@co.monroe.in.us>
Subject: RE: Early Coordination Letter: SR 45 Added Travel Lane Project #1800086

__External Message:__ This email was sent from someone outside of CMT. Please use caution with links and attachments from unknown senders or receiving unexpected emails.

Ms. Hogrebe,

We would like to review the SWQMP as well as the stormwater outfalls from the site to ensure they are adequate to handle the proposed discharges.

Thank you for your consideration.

Terry Quillman, MS4 Coordinator
Monroe County Highway Department
501 North Morton Street, Suite 216
Bloomington, IN 47404
tquillman@co.monroe.in.us
(812)349-2499

February 4, 2019

Jane Fleig
Bloomington Utilities
600 E. Miller Drive
Bloomington, IN 47402

Subject: Initial Notice of Proposed Improvement Project Des. No. 1800199

Dear Jane;

Our firm has been assigned the task of utility coordination for the project referenced above by the Indiana Department of Transportation. In accordance with 105 IAC 13-3-1(c), this letter serves as your initial notice of the proposed improvement project Des. No. 1800199 on SR 45 and Pete Ellis Road in Monroe County, Indiana.

In accordance with 105 IAC 13-3-1(c), the following information is provided. The dates listed in items (4) and (5) below are the currently scheduled dates.

(1) Name or route number:	SR 45
(2) Geographical limits:	SR 45 and Pete Ellis Road Intersection, Location Map (Attached), Google Map Location
(3) General description of work:	Intersection Improvement Project
(4) Date approved work plan will be needed:	8/24/2022
(5) Ready for contracts date:	12/7/2022
(6) Name of designer and contact information:	Cassie Reiter Crawford Murphy & Tilly, Inc. 8790 Purdue Road Indianapolis, IN 466268 317-298-4500
(7) Major or minor project:	MAJOR

In accordance with 105 IAC 13-3-1(d), within 30 days after receiving the initial notice, the utility shall respond in writing with a:

(1) Description of the type and location of its facilities within the geographical limits of the proposed improvement project; or

(2) If the utility has determined to the best of their abilities that they do not have facilities within the geographical limits of the improvement project; complete, sign, and return Page 1of the attached Work Plan.

Additionally, please provide us the name, telephone number, postal address and email address of the person selected as your designated contact for this project to expedite future communications. We will contact Indiana 811 and request locates for this project prior to our survey. If you would prefer to provide us location information by some other means, please contact this office to discuss.

February 4, 2019
Page Two

Please send your response to Richard C Condre, Crawford, Murphy & Tilly, Inc., 8790 Purdue Road, Indianapolis, IN, 46254, telephone: 317-492-9158, fax: 317-298-4503, rccondre@cmtengr.com. Thank you for your attention to these matters.

Sincerely,

CRAWFORD, MURPHY & TILLY, INC.

Ricahrd C Condre
Engineer

Ellen Hogrebe

From: Jane Fleig <fleigj@bloomington.in.gov>
Sent: Thursday, February 7, 2019 9:36 AM
To: Richy Condre
Cc: Phil Peden
Subject: Re: INDOT Des. No. 1800199 - SR 45 and Pete Ellis Road - Initial Notice
Attachments: Project Location Map_SR 45 and Pete Ellis Rd.pdf

Mr. Condre,
Per your request, attached please find a GIS map showing the APPROXIMATE locations of City of Bloomington Utility (CBU) water, sewer and storm sewer infrastructure as well as some private infrastructure within the project limits. Please note this information is NOT WARRANTED and all utility locations MUST BE field verified.

The designated contact for this project will be:
Phil Peden, PE
Utilities Engineer
City of Bloomington Utilities
600 E Miller Dr
PO Box 1216
Bloomington, IN 47402
pedenp@bloomington.in.gov
812-349-3634

Also, please be aware that CBU requires one set of printed plans for our tracking and review during the design process.

Please follow up with Phil if you have any additional questions.

Thanks,
Jane

On Mon, Feb 4, 2019 at 12:50 PM Richy Condre <rccondre@cmtengr.com> wrote:

> Jane,
>
> Attached is the Initial Notice of Proposed Improvements for the Intersection of SR 45 and Pete Ellis Road.
>
> If you have any questions, please contact this office at 317-492-9158.
>
> **RICHY CONDRE** | Engineer

Ellen Hogrebe

From: Phil Peden <pedenp@bloomington.in.gov>
Sent: Tuesday, May 5, 2020 11:02 AM
To: Richy Condre
Subject: Re: INDOT Des. No. 1800199 - SR 45 and Pete Ellis Road - Request Verification
Attachments: E 10th St.pdf

External Message: *This email was sent from someone outside of CMT. Please use caution with links and attachments from unknown senders or receiving unexpected emails.*

The water looks pretty accurate on your drawing. I noticed a few sanitary items. There is an existing private 8" forcemain that you show crossing 10th St around 426+40, it continues south through the easement behind the Post Office. The 12" sanitary sewer forcemain you show on the north side of E 10th St that ends at 425+80 actually continues another 850' to the east. I've attached our GIS map for reference, although it doesn't show the new 12" forcemain on the northside of the road.

Phil Peden, PE
Utilities Engineer
City of Bloomington Utilities
(812)349-3634
pedenp@bloomington.in.gov
http://bloomington.in.gov/utilities/

On Wed, Apr 29, 2020 at 11:01 AM Richy Condre <rccondre@cmtengr.com> wrote:

Attached is the Request Verification for the Intersection of SR 45 and Pete Ellis Road.

If you have any questions, please contact this office at 317-492-9158.

RICHY CONDRE | Engineer

Crawford, Murphy & Tilly | Engineers & Consultants
8790 Purdue Road | Indianapolis, IN | 46268
Direct: 317.492.9158 | Mobile: 317.281.4517 | Fax: 317.298.4503
rccondre@cmtengr.com

---

www.cmtengr.com | *Centered in Value | 2014 ENR Midwest Design Firm of the Year*

From:	Baker, Mindy
To:	Ellen Hogrebe
Cc:	Cassie Reiter; Kristin Timmons; Dye, David
Subject:	RE: SR 45 & Pete Ellis Dr. Intersection Modification (Des. No. 1800199) Bat Database Review
Date:	Tuesday, March 12, 2019 7:29:30 AM
Attachments:	image004.png image005.png image006.png image007.png image008.png image009.png

---

Ellen,

I have conducted a check of the USFWS confidential bat database for Des No. 1800199 and the results are stated below.

A review of the USFWS database did not indicate the presence of endangered bat species in or within 0.5 mile of the project area. Additional investigation to confirm the presence or absence of bats in or on any bridges, culverts or structures affected by the project will be necessary. The range-wide programmatic consultation for the Indiana Bat and Northern Long-eared Bat will be completed according to the most recent "Using the USFWS's IPaC System for Listed Bat Consultation for INDOT Projects".

Also, although I am the contact for USFWS bat database checks, David Dye will be the contact for your IPAC review.

Thanks,

Mindy Baker
Environmental Manager
185 Agrico Lane
Seymour, IN 47274
Office: (812) 524-3746
Email: mbaker2@indot.in.gov

From: Ellen Hogrebe [mailto:ehogrebe@cmtengr.com]
Sent: Monday, March 11, 2019 5:56 PM
To: Baker, Mindy <MBaker2@indot.IN.gov>
Cc: Cassie Reiter <creiter@cmtengr.com>; Kristin Timmons <ktimmons@cmtengr.com>
Subject: SR 45 & Pete Ellis Dr. Intersection Modification (Des. No. 1800199) Bat Database Review

**** This is an EXTERNAL email. Exercise caution. DO NOT open attachments or

click links from unknown senders or unexpected email. ****

Hi Mindy,

We are requesting another review of the database regarding the presence of endangered bats in or near the project area for the SR 45 & Pete Ellis Dr. Intersection Modification (Des. No. 1800199). The project area is shown in the attached aerial map, USGS map, and shapefile.

The results will be included in our Red Flag Investigation.

Please let me know if you need anything else, and thank you,

ELLEN HOGREBE | Environmental Scientist

Crawford, Murphy & Tilly | Engineers & Consultants
8790 Purdue Road| Indianapolis, IN 46268
w 314.571.9103 | m 419.350.1271 | f 314.436.0723 | ehogrebe@cmtengr.com

Centered in Value

Ellen Hogrebe

From: Baker, Mindy <MBaker2@indot.IN.gov>
Sent: Monday, May 4, 2020 11:34 AM
To: Ellen Hogrebe
Cc: Cassie Reiter; Dye, David
Subject: RE: SR 45 Added Travel Lane (Des. No. 1800086) Bat Database Review

External Message: *This email was sent from someone outside of CMT. Please use caution with links and attachments from unknown senders or receiving unexpected emails.*

Ellen,

I have conducted a check of the USFWS confidential bat database for Des No. 1800086 and the results are stated below.

A review of the USFWS database did not indicate the presence of endangered bat species in or within 0.5 mile of the project area. Additional investigation to confirm the presence or absence of bats in or on any culverts, bridges or structures affected by the project will be necessary. The range-wide programmatic consultation for the Indiana Bat and Northern Long-eared Bat will be completed according to the most recent "Using the USFWS's IPaC System for Listed Bat Consultation for INDOT Projects".

Also, although I am the contact for USFWS bat database checks, David Dye will be the contact for your IPAC review.

Mindy Baker
Environmental Manager
185 Agrico Lane
Seymour, IN 47274
Office: (812) 524-3746
Email: mbaker2@indot.in.gov

From: Ellen Hogrebe <ehogrebe@cmtengr.com>
Sent: Monday, May 4, 2020 11:51 AM
To: Baker, Mindy <MBaker2@indot.IN.gov>
Cc: Cassie Reiter <creiter@cmtengr.com>
Subject: SR 45 Added Travel Lane (Des. No. 1800086) Bat Database Review

**** This is an EXTERNAL email. Exercise caution. DO NOT open attachments or click links from unknown senders or unexpected email. ****

Hi Mindy,
We are requesting another review of the Indiana Natural Heritage Database regarding the presence of endangered bats in or near the project area for the SR 45 Added Travel Lane project (Des. No. 1800086) in Bloomington, Monroe Co., Indiana. The project study area is shown in the attached aerial map, USGS map, and shapefile. The results will be included in our Red Flag Investigation.

Please let me know if you need anything else, and thank you,

ELLEN HOGREBE | Environmental Scientist

Crawford, Murphy & Tilly | **Engineers & Consultants**
8790 Purdue Road| Indianapolis, IN 46268
w 314.571.9103 | m 419.350.1271 | f 314.436.0723 | ehogrebe@cmtengr.com

Centered in Value

United States Department of the Interior

FISH AND WILDLIFE SERVICE
Indiana Ecological Services Field Office
620 South Walker Street
Bloomington, IN 47403-2121
Phone: (812) 334-4261 Fax: (812) 334-4273
http://www.fws.gov/midwest/Endangered/section7/s7process/step1.html

In Reply Refer To: November 08, 2021
Consultation Code: 03E12000-2019-SLI-0910
Event Code: 03E12000-2022-E-01258
Project Name: Des No 1800199 - SR 45 and Pete Ellis Drive/Discovery Parkway Intersection Improvement

Subject: Updated list of threatened and endangered species that may occur in your proposed project location or may be affected by your proposed project

To Whom It May Concern:

The attached species list identifies any federally threatened, endangered, proposed and candidate species that may occur within the boundary of your proposed project or may be affected by your proposed project. The list also includes designated critical habitat if present within your proposed project area or affected by your project. This list is provided to you as the initial step of the consultation process required under section 7(c) of the Endangered Species Act, also referred to as Section 7 Consultation.

Section 7 of the Endangered Species Act of 1973 requires that actions authorized, funded, or carried out by Federal agencies not jeopardize federally threatened or endangered species or adversely modify designated critical habitat. To fulfill this mandate, Federal agencies (or their designated non-federal representative) must consult with the Service if they determine their project “may affect” listed species or critical habitat.

Under 50 CFR 402.12(e) (the regulations that implement Section 7 of the Endangered Species Act) the accuracy of this species list should be verified after 90 days. This verification can be completed formally or informally. You may verify the list by visiting the ECOS-IPaC website http://ecos.fws.gov/ipac/ at regular intervals during project planning and implementation and completing the same process you used to receive the attached list. As an alternative, you may contact this Ecological Services Field Office for updates.

Please use the species list provided and visit the U.S. Fish and Wildlife Service’s Region 3 Section 7 Technical Assistance website at - http://www.fws.gov/midwest/endangered/section7/s7process/index.html. This website contains step-by-step instructions which will help you

determine if your project will have an adverse effect on listed species and will help lead you through the Section 7 process.

For all **wind energy projects** and **projects that include installing towers that use guy wires or are over 200 feet in height**, please contact this field office directly for assistance, even if no federally listed plants, animals or critical habitat are present within your proposed project or may be affected by your proposed project.

Although no longer protected under the Endangered Species Act, be aware that bald eagles are protected under the Bald and Golden Eagle Protection Act (16 U.S.C. 668 *et seq.*) and Migratory Bird Treaty Act *(*16 U.S.C. 703 *et seq*), as are golden eagles. Projects affecting these species may require measures to avoid harming eagles or may require a permit. If your project is near an eagle nest or winter roost area, see our Eagle Permits website at http://www.fws.gov/midwest/midwestbird/EaglePermits/index.html to help you determine if you can avoid impacting eagles or if a permit may be necessary.

We appreciate your concern for threatened and endangered species. Please include the Consultation Tracking Number in the header of this letter with any request for consultation or correspondence about your project that you submit to our office.

Attachment(s):

- Official Species List

Official Species List

This list is provided pursuant to Section 7 of the Endangered Species Act, and fulfills the requirement for Federal agencies to "request of the Secretary of the Interior information whether any species which is listed or proposed to be listed may be present in the area of a proposed action".

This species list is provided by:

Indiana Ecological Services Field Office
620 South Walker Street
Bloomington, IN 47403-2121
(812) 334-4261

Project Summary

Consultation Code: 03E12000-2019-SLI-0910
Event Code: Some(03E12000-2022-E-01258)
Project Name: Des No 1800199 - SR 45 and Pete Ellis Drive/Discovery Parkway Intersection Improvement
Project Type:
Project Description: The project is located at the SR 45 intersection with Pete Ellis Drive/ Discovery Parkway. The project extends along SR 45 from approximately 0.21 mile west to approximately 0.19 mile east of its intersection with Pete Ellis Drive/Discovery Parkway. The project extends along Pete Ellis Dive for approximately 0.10 mile to the south and Discovery Parkway for approximately 0.10 mile to the north. This project will involve widening SR 45, Pete Ellis Drive, and Discovery Parkway to accommodate the addition of exclusive left- and right-turn lanes at all approaches to the intersection. No bridges or culverts are involved in this project. Suitable summer habitat was identified within and adjacent to the project area in the form of individual trees exhibiting peeling bark and/or cavities. Approximately 40 trees will need to be removed for the project; five of these trees (sugar maple, tulip poplar, shagbark hickory, and pin oak species) were identified as potential suitable summer habitat. Trees are expected to be removed after the start of construction in February/March 2023. A review of the USFWS database for Indiana bat and Northern long-eared bat roosting, hibernacula and captures sites was conducted by the Seymour District on March 12, 2019. The review did not indicate the presence of endangered bat species in or within 0.5 mile of the project area. This project is not within the Critical Habitat Buffer, but is within the buffer of a Priority 1 or Priority 2 Indiana bat hibernacula and tree clearing should not commence until Nov. 15 through March 30th. The existing traffic signals will be replaced; temporary lighting may be needed during the construction phase. Construction is anticipated to start in February 2023 and be completed by Fall 2024.

Project Location:

Approximate location of the project can be viewed in Google Maps: https://www.google.com/maps/@39.17134865,-86.49526606798568,14z

Counties: Monroe County, Indiana

Endangered Species Act Species

There is a total of 3 threatened, endangered, or candidate species on this species list.

Species on this list should be considered in an effects analysis for your project and could include species that exist in another geographic area. For example, certain fish may appear on the species list because a project could affect downstream species. Note that 1 of these species should be considered only under certain conditions.

IPaC does not display listed species or critical habitats under the sole jurisdiction of NOAA Fisheries[1], as USFWS does not have the authority to speak on behalf of NOAA and the Department of Commerce.

See the "Critical habitats" section below for those critical habitats that lie wholly or partially within your project area under this office's jurisdiction. Please contact the designated FWS office if you have questions.

---

1. NOAA Fisheries, also known as the National Marine Fisheries Service (NMFS), is an office of the National Oceanic and Atmospheric Administration within the Department of Commerce.

Mammals

NAME	STATUS
Indiana Bat *Myotis sodalis* There is **final** critical habitat for this species. Your location overlaps the critical habitat. Species profile: https://ecos.fws.gov/ecp/species/5949	Endangered
Northern Long-eared Bat *Myotis septentrionalis* No critical habitat has been designated for this species. This species only needs to be considered under the following conditions: ▪ Incidental take of the NLEB is not prohibited here. Federal agencies may consult using the 4(d) rule streamlined process. Transportation projects may consult using the programmatic process. See www.fws.gov/midwest/endangered/mammals/nleb/index.html Species profile: https://ecos.fws.gov/ecp/species/9045	Threatened

Insects

NAME	STATUS
Monarch Butterfly *Danaus plexippus* No critical habitat has been designated for this species. Species profile: https://ecos.fws.gov/ecp/species/9743	Candidate

Critical habitats

There is 1 critical habitat wholly or partially within your project area under this office's jurisdiction.

NAME	STATUS
Indiana Bat *Myotis sodalis* https://ecos.fws.gov/ecp/species/5949#crithab	Final

United States Department of the Interior

FISH AND WILDLIFE SERVICE
Indiana Ecological Services Field Office
620 South Walker Street
Bloomington, IN 47403-2121
Phone: (812) 334-4261 Fax: (812) 334-4273
http://www.fws.gov/midwest/Endangered/section7/s7process/step1.html

In Reply Refer To: February 22, 2021
Consultation code: 03E12000-2019-I-0910
Event Code: 03E12000-2021-E-03894
Project Name: Des No 1800199 - SR 45 and Pete Ellis Drive/Discovery Parkway Intersection Improvement

Subject: Concurrence verification letter for the 'Des No 1800199 - SR 45 and Pete Ellis Drive/ Discovery Parkway Intersection Improvement' project under the revised February 5, 2018, FHWA, FRA, FTA Programmatic Biological Opinion for Transportation Projects within the Range of the Indiana Bat and Northern Long-eared Bat.

To whom it may concern:

The U.S. Fish and Wildlife Service (Service) has received your request to verify that the **Des No 1800199 - SR 45 and Pete Ellis Drive/Discovery Parkway Intersection Improvement** (Proposed Action) may rely on the concurrence provided in the February 5, 2018, FHWA, FRA, FTA Programmatic Biological Opinion for Transportation Projects within the Range of the Indiana Bat and Northern Long-eared Bat (PBO) to satisfy requirements under Section 7(a)(2) of the Endangered Species Act of 1973 (ESA) (87 Stat. 884, as amended; 16 U.S.C 1531 *et seq.*).

Based on the information you provided (Project Description shown below), you have determined that the Proposed Action is within the scope and adheres to the criteria of the PBO, including the adoption of applicable avoidance and minimization measures, and may affect, but is <u>not likely to adversely affect</u> (NLAA) the endangered Indiana bat (*Myotis sodalis*) and/or the threatened Northern long-eared bat (*Myotis septentrionalis*).

The Service has 14 calendar days to notify the lead Federal action agency or designated non-federal representative if we determine that the Proposed Action does not meet the criteria for a NLAA determination under the PBO. If we do <u>not</u> notify the lead Federal action agency or designated non-federal representative within that timeframe, you may proceed with the Proposed Action under the terms of the NLAA concurrence provided in the PBO. This verification period allows Service Field Offices to apply local knowledge to implementation of the PBO, as we may identify a small subset of actions having impacts that were unanticipated. In such instances,

Service Field Offices may request additional information that is necessary to verify inclusion of the proposed action under the PBO.

For Proposed Actions that include bridge/structure removal, replacement, and/or maintenance activities: If your initial bridge/structure assessments failed to detect Indiana bats, but you later detect bats during construction, please submit the Post Assessment Discovery of Bats at Bridge/Structure Form (User Guide Appendix E) to this Service Office. In these instances, potential incidental take of Indiana bats may be exempted provided that the take is reported to the Service.

If the Proposed Action is modified, or new information reveals that it may affect the Indiana bat and/or Northern long-eared bat in a manner or to an extent not considered in the PBO, further review to conclude the requirements of ESA Section 7(a)(2) may be required. If the Proposed Action may affect any other federally-listed or proposed species, and/or any designated critical habitat, additional consultation between the lead Federal action agency and this Service Office is required. If the proposed action has the potential to take bald or golden eagles, additional coordination with the Service under the Bald and Golden Eagle Protection Act may also be required. In either of these circumstances, please contact this Service Office.

Project Description

The following project name and description was collected in IPaC as part of the endangered species review process.

Name

Des No 1800199 - SR 45 and Pete Ellis Drive/Discovery Parkway Intersection Improvement

Description

The project is located at the SR 45 intersection with Pete Ellis Drive/Discovery Parkway. The project extends along SR 45 from approximately 0.21 mile west to approximately 0.19 mile east of its intersection with Pete Ellis Drive/Discovery Parkway. The project extends along Pete Ellis Dive for approximately 0.10 mile to the south and Discovery Parkway for approximately 0.10 mile to the north. This project will involve widening SR 45, Pete Ellis Drive, and Discovery Parkway to accommodate the addition of exclusive left- and right-turn lanes at all approaches to the intersection. No bridges or culverts are involved in this project. Suitable summer habitat was identified within and adjacent to the project area in the form of individual trees exhibiting peeling bark and/or cavities. Approximately 40 trees will need to be removed for the project; five of these trees (sugar maple, tulip poplar, shagbark hickory, and pin oak species) were identified as potential suitable summer habitat. Trees are expected to be removed after the start of construction in February/March 2023. A review of the USFWS database for Indiana bat and Northern long-eared bat roosting, hibernacula and captures sites was conducted by the Seymour District on March 12, 2019. The review did not indicate the presence of endangered bat species in or within 0.5 mile of the project area. This project is not within the Critical Habitat Buffer, but is within the buffer of a Priority 1 or Priority 2 Indiana bat hibernacula and tree clearing should not commence until Nov. 15 through March 30th. The existing traffic signals will be replaced; temporary lighting may be needed during the construction phase. Construction is anticipated to start in February 2023 and be completed by Fall 2024.

Determination Key Result

Based on your answers provided, this project(s) may affect, but is not likely to adversely affect the endangered Indiana bat and/or the threatened Northern long-eared bat, therefore, consultation with the U.S. Fish and Wildlife Service pursuant to Section 7(a)(2) of the Endangered Species Act of 1973 (ESA) (87 Stat. 884, as amended 16 U.S.C. 1531 *et seq.*) is required. However, also based on your answers provided, this project may rely on the concurrence provided in the revised February 5, 2018, FHWA, FRA, FTA Programmatic Biological Opinion for Transportation Projects within the Range of the Indiana Bat and Northern Long-eared Bat.

Qualification Interview

1. Is the project within the range of the Indiana bat[1]?

   [1] See Indiana bat species profile

   Automatically answered
   Yes

2. Is the project within the range of the Northern long-eared bat[1]?

   [1] See Northern long-eared bat species profile

   Automatically answered
   Yes

3. Which Federal Agency is the lead for the action?

   A) Federal Highway Administration (FHWA)

4. Are *all* project activities limited to non-construction[1] activities only? (examples of non-construction activities include: bridge/abandoned structure assessments, surveys, planning and technical studies, property inspections, and property sales)

   [1] Construction refers to activities involving ground disturbance, percussive noise, and/or lighting.

   No

5. Does the project include *any* activities that are **greater than** 300 feet from existing road/rail surfaces[1]?

   [1] Road surface is defined as the actively used [e.g. motorized vehicles] driving surface and shoulders [may be pavement, gravel, etc.] and rail surface is defined as the edge of the actively used rail ballast.

   No

6. Does the project include *any* activities **within** 0.5 miles of a known Indiana bat and/or NLEB hibernaculum[1]?

   [1] For the purpose of this consultation, a hibernaculum is a site, most often a cave or mine, where bats hibernate during the winter (see suitable habitat), but could also include bridges and structures if bats are found to be hibernating there during the winter.

   No

7. Is the project located **within** a karst area?

   Yes

8. Will the project include *any* type of activity that could impact a **known** hibernaculum[1], or impact a karst feature (e.g., sinkhole, losing stream, or spring) that could result in effects to a **known** hibernaculum?

   [1] For the purpose of this consultation, a hibernaculum is a site, most often a cave or mine, where bats hibernate during the winter (see suitable habitat), but could also include bridges and structures if bats are found to be hibernating there during the winter.

   No

9. Is there *any* suitable[1] summer habitat for Indiana Bat or NLEB **within** the project action area[2]? (includes any trees suitable for maternity, roosting, foraging, or travelling habitat)

   [1] See the Service's summer survey guidance for our current definitions of suitable habitat.

   [2] The action area is defined as all areas to be affected directly or indirectly by the Federal action and not merely the immediate area involved in the action (50 CFR Section 402.02). Further clarification is provided by the national consultation FAQs.

   Yes

10. Will the project remove *any* suitable summer habitat[1] and/or remove/trim any existing trees **within** suitable summer habitat?

    [1] See the Service's summer survey guidance for our current definitions of suitable habitat.

    Yes

11. Will the project clear more than 20 acres of suitable habitat per 5-mile section of road/rail?

    No

12. Have presence/probable absence (P/A) summer surveys[1][2] been conducted[3][4] **within** the suitable habitat located within your project action area?

    [1] See the Service's summer survey guidance for our current definitions of suitable habitat.

    [2] Presence/probable absence summer surveys conducted within the fall swarming/spring emergence home range of a documented Indiana bat hibernaculum (contact local Service Field Office for appropriate distance from hibernacula) that result in a negative finding requires additional consultation with the local Service Field Office to determine if clearing of forested habitat is appropriate and/or if seasonal clearing restrictions are needed to avoid and minimize potential adverse effects on fall swarming and spring emerging Indiana bats.

    [3] For projects within the range of either the Indiana bat or NLEB in which suitable habitat is present, and no bat surveys have been conducted, the transportation agency will assume presence of the appropriate species. This assumption of presence should be based upon the presence of suitable habitat and the capability of bats to occupy it because of their mobility.

    [4] Negative presence/probable absence survey results obtained using the summer survey guidance are valid for a minimum of two years from the completion of the survey unless new information (e.g., other nearby surveys) suggest otherwise.

    No

13. Does the project include activities **within documented Indiana bat habitat**[1][2]?

    [1] Documented roosting or foraging habitat – for the purposes of this consultation, we are considering documented habitat as that where Indiana bats and/or NLEB have actually been captured and tracked using (1) radio telemetry to roosts; (2) radio telemetry biangulation/triangulation to estimate foraging areas; or (3) foraging areas with repeated use documented using acoustics. Documented roosting habitat is also considered as suitable summer habitat within 0.25 miles of documented roosts.)

    [2] For the purposes of this key, we are considering documented corridors as that where Indiana bats and/or NLEB have actually been captured and tracked to using (1) radio telemetry; or (2) treed corridors located directly between documented roosting and foraging habitat.

    No

14. Will the removal or trimming of habitat or trees occur **within** suitable but **undocumented Indiana bat** roosting/foraging habitat or travel corridors?

    Yes

15. What time of year will the removal or trimming of habitat or trees **within** suitable but **undocumented Indiana bat** roosting/foraging habitat or travel corridors occur[1]?

    [1] Coordinate with the local Service Field Office for appropriate dates.

    B) During the inactive season

16. Does the project include activities **within documented NLEB habitat**[1][2]?

    [1] Documented roosting or foraging habitat – for the purposes of this consultation, we are considering documented habitat as that where Indiana bats and/or NLEB have actually been captured and tracked using (1) radio telemetry to roosts; (2) radio telemetry biangulation/triangulation to estimate foraging areas; or (3) foraging areas with repeated use documented using acoustics. Documented roosting habitat is also considered as suitable summer habitat within 0.25 miles of documented roosts.)

    [2] For the purposes of this key, we are considering documented corridors as that where Indiana bats and/or NLEB have actually been captured and tracked to using (1) radio telemetry; or (2) treed corridors located directly between documented roosting and foraging habitat.

    No

17. Will the removal or trimming of habitat or trees occur **within** suitable but **undocumented NLEB** roosting/foraging habitat or travel corridors?

    Yes

18. What time of year will the removal or trimming of habitat or trees **within** suitable but **undocumented NLEB** roosting/foraging habitat or travel corridors occur?

    B) During the inactive season

19. Will *any* tree trimming or removal occur **within** 100 feet of existing road/rail surfaces?

    Yes

20. Will *any* tree trimming or removal occur **between** 100-300 feet of existing road/rail surfaces?

    No

21. Are *all* trees that are being removed clearly demarcated?

    Yes

22. Will the removal of habitat or the removal/trimming of trees include installing new or replacing existing **permanent** lighting?

    No

23. Does the project include wetland or stream protection activities associated with compensatory wetland mitigation?

    No

24. Does the project include slash pile burning?

    No

25. Does the project include *any* bridge removal, replacement, and/or maintenance activities (e.g., any bridge repair, retrofit, maintenance, and/or rehabilitation work)?

    No

26. Does the project include the removal, replacement, and/or maintenance of *any* structure other than a bridge? (e.g., rest areas, offices, sheds, outbuildings, barns, parking garages, etc.)

    No

27. Will the project involve the use of **temporary** lighting *during* the active season?

    Yes

28. Is there *any* suitable habitat **within** 1,000 feet of the location(s) where **temporary** lighting will be used?

    Yes

29. Will the project install new or replace existing **permanent** lighting?

    Yes

30. Is there *any* suitable habitat **within** 1,000 feet of the location(s) where **permanent** lighting will be installed or replaced?

    Yes

31. Does the project include percussives or other activities (**not including tree removal/ trimming or bridge/structure work**) that will increase noise levels above existing traffic/ background levels?

    Yes

32. Will the activities that use percussives (**not including tree removal/trimming or bridge/ structure work**) and/or increase noise levels above existing traffic/background levels be conducted *during* the active season[1]?

    [1] Coordinate with the local Service Field Office for appropriate dates.

    Yes

33. Will *any* activities that use percussives (**not including tree removal/trimming or bridge/structure work**) and/or increase noise levels above existing traffic/background levels be conducted *during* the inactive season[1]?

    [1] Coordinate with the local Service Field Office for appropriate dates.

    Yes

34. Are *all* project activities that are **not associated with** habitat removal, tree removal/trimming, bridge and/or structure activities, temporary or permanent lighting, or use of percussives, limited to actions that DO NOT cause any additional stressors to the bat species?

    Examples: lining roadways, unlighted signage , rail road crossing signals, signal lighting, and minor road repair such as asphalt fill of potholes, etc.

    Yes

35. Will the project raise the road profile **above the tree canopy**?

    No

36. Are the project activities that use percussives (not including tree removal/trimming or bridge/structure work) consistent with a Not Likely to Adversely Affect determination in this key?

    Automatically answered
    Yes, because the activities are within 300 feet of the existing road/rail surface, greater than 0.5 miles from a hibernacula, and conducted during the active season within undocumented habitat.

37. Are the project activities that use percussives (not including tree removal/trimming or bridge/structure work) and/or increase noise levels above existing traffic/background levels consistent with a No Effect determination in this key?

    Automatically answered
    Yes, because the activities are within 300 feet of the existing road/rail surface, greater than 0.5 miles from a hibernacula, and conducted during the inactive season

38. Is the habitat removal portion of this project consistent with a Not Likely to Adversely Affect determination in this key?

    Automatically answered
    Yes, because the tree removal/trimming that occurs outside of the Indiana bat's active season occurs greater than 0.5 miles from the nearest hibernaculum, is less than 100 feet from the existing road/rail surface, includes clear demarcation of the trees that are to be removed, and does not alter documented roosts and/or surrounding summer habitat within 0.25 miles of a documented roost.

39. Is the habitat removal portion of this project consistent with a Not Likely to Adversely Affect determination in this key?

    Automatically answered
    Yes, because the tree removal/trimming that occurs outside of the NLEB's active season occurs greater than 0.5 miles from the nearest hibernaculum, is less than 100 feet from the existing road/rail surface, includes clear demarcation of the trees that are to be removed, and does not alter documented roosts and/or surrounding summer habitat within 0.25 miles of a documented roost.

40. **General AMM 1**
    Will the project ensure *all* operators, employees, and contractors working in areas of known or presumed bat habitat are aware of *all* FHWA/FRA/FTA (Transportation Agencies) environmental commitments, including all applicable Avoidance and Minimization Measures?

    Yes

41. **Hibernacula AMM 1**
    Will the project ensure that on-site personnel will use best management practices[1], secondary containment measures, or other standard spill prevention and countermeasures to avoid impacts to possible hibernacula?

    [1] Coordinate with the appropriate Service Field Office on recommended best management practices for karst in your state.

    Yes

42. **Hibernacula AMM 1**
    Will the project ensure that, where practicable, a 300 foot buffer will be employed to separate fueling areas and other major containment risk activities from caves, sinkholes, losing streams, and springs in karst topography?

    Yes

43. **Tree Removal AMM 1**
    Can *all* phases/aspects of the project (e.g., temporary work areas, alignments) be modified, to the extent practicable, to avoid tree removal[1] in excess of what is required to implement the project safely?

    Note: Tree Removal AMM 1 is a minimization measure, the full implementation of which may not always be practicable. Projects may still be NLAA as long as Tree Removal AMMs 2, 3, and 4 are implemented and LAA as long as Tree Removal AMMs 3, 5, 6, and 7 are implemented.

    [1] The word “trees” as used in the AMMs refers to trees that are suitable habitat for each species within their range. See the USFWS’ current summer survey guidance for our latest definitions of suitable habitat.

    Yes

44. **Tree Removal AMM 3**
    Can tree removal be limited to that specified in project plans and ensure that contractors understand clearing limits and how they are marked in the field (e.g., install bright colored flagging/fencing prior to any tree clearing to ensure contractors stay within clearing limits)?

    Yes

45. **Tree Removal AMM 4**
    Can the project avoid cutting down/removal of *all* (1) **documented**[1] Indiana bat or NLEB roosts[2] (that are still suitable for roosting), (2) trees **within** 0.25 miles of roosts, and (3) documented foraging habitat any time of year?

    [1] The word documented means habitat where bats have actually been captured and/or tracked.

    [2] Documented roosting or foraging habitat – for the purposes of this consultation, we are considering documented habitat as that where Indiana bats and/or NLEB have actually been captured and tracked using (1) radio telemetry to roosts; (2) radio telemetry biangulation/triangulation to estimate foraging areas; or (3) foraging areas with repeated use documented using acoustics. Documented roosting habitat is also considered as suitable summer habitat within 0.25 miles of documented roosts.)

    Yes

46. **Lighting AMM 1**
    Will *all* **temporary** lighting be directed away from suitable habitat during the active season?

    Yes

47. **Lighting AMM 2**
    Does the lead agency use the BUG (Backlight, Uplight, and Glare) system developed by the Illuminating Engineering Society[1][2] to rate the amount of light emitted in unwanted directions?

    [1] Refer to Fundamentals of Lighting - BUG Ratings

    [2] Refer to The BUG System—A New Way To Control Stray Light

    Yes

48. **Lighting AMM 2**
    Will the **permanent** lighting be designed to be as close to 0 for all three BUG ratings as possible, with a priority of "uplight" of 0 and "backlight" as low as practicable?

    Yes

Project Questionnaire

1. Have you made a No Effect determination for *all* other species indicated on the FWS IPaC generated species list?

   N/A

2. Have you made a May Affect determination for *any* other species on the FWS IPaC generated species list?

N/A

3. How many acres[1] of trees are proposed for removal between 0-100 feet of the existing road/rail surface?

[1] If described as number of trees, multiply by 0.09 to convert to acreage and enter that number.

2.2

Avoidance And Minimization Measures (AMMs)

This determination key result includes the committment to implement the following Avoidance and Minimization Measures (AMMs):

TREE REMOVAL AMM 1

Modify all phases/aspects of the project (e.g., temporary work areas, alignments) to avoid tree removal.

LIGHTING AMM 1

Direct temporary lighting away from suitable habitat during the active season.

TREE REMOVAL AMM 2

Apply time of year restrictions for tree removal when bats are not likely to be present, or limit tree removal to 10 or fewer trees per project at any time of year within 100 feet of existing road/rail surface and **outside of documented** roosting/foraging habitat or travel corridors; visual emergence survey must be conducted with no bats observed.

LIGHTING AMM 2

When installing new or replacing existing permanent lights, use downward-facing, full cut-off lens lights (with same intensity or less for replacement lighting); or for those transportation agencies using the BUG system developed by the Illuminating Engineering Society, be as close to 0 for all three ratings with a priority of "uplight" of 0 and "backlight" as low as practicable.

TREE REMOVAL AMM 3

Ensure tree removal is limited to that specified in project plans and ensure that contractors understand clearing limits and how they are marked in the field (e.g., install bright colored flagging/fencing prior to any tree clearing to ensure contractors stay within clearing limits).

TREE REMOVAL AMM 4

Do not remove **documented** Indiana bat or NLEB roosts that are still suitable for roosting, or trees within 0.25 miles of roosts, or
documented foraging habitat any time of year.

GENERAL AMM 1

Ensure all operators, employees, and contractors working in areas of known or presumed bat habitat are aware of all FHWA/FRA/FTA (Transportation Agencies) environmental commitments, including all applicable AMMs.

HIBERNACULA AMM 1

For projects located within karst areas, on-site personnel will use best management practices, secondary containment measures, or other standard spill prevention and countermeasures to

avoid impacts to possible hibernacula. Where practicable, a 300 foot buffer will be employed to separate fueling areas and other major containment risk activities from caves, sinkholes, losing streams, and springs in karst topography.

Determination Key Description: FHWA, FRA, FTA Programmatic Consultation For Transportation Projects Affecting NLEB Or Indiana Bat

This key was last updated in IPaC on December 29, 2020. Keys are subject to periodic revision.

This decision key is intended for projects/activities funded or authorized by the Federal Highway Administration (FHWA), Federal Railroad Administration (FRA), and/or Federal Transit Administration (FTA), which may require consultation with the U.S. Fish and Wildlife Service (Service) under Section 7 of the Endangered Species Act (ESA) for the endangered **Indiana bat** (*Myotis sodalis*) and the threatened **Northern long-eared bat** (NLEB) (*Myotis septentrionalis*).

This decision key should only be used to verify project applicability with the Service's February 5, 2018, FHWA, FRA, FTA Programmatic Biological Opinion for Transportation Projects. The programmatic biological opinion covers limited transportation activities that may affect either bat species, and addresses situations that are both likely and not likely to adversely affect either bat species. This decision key will assist in identifying the effect of a specific project/activity and applicability of the programmatic consultation. The programmatic biological opinion is not intended to cover all types of transportation actions. Activities outside the scope of the programmatic biological opinion, or that may affect ESA-listed species other than the Indiana bat or NLEB, or any designated critical habitat, may require additional ESA Section 7 consultation.

United States Department of the Interior

FISH AND WILDLIFE SERVICE
Indiana Ecological Services Field Office
620 South Walker Street
Bloomington, IN 47403-2121
Phone: (812) 334-4261 Fax: (812) 334-4273
http://www.fws.gov/midwest/Endangered/section7/s7process/step1.html

In Reply Refer To: November 08, 2021
Consultation Code: 03E12000-2021-SLI-0280
Event Code: 03E12000-2022-E-01259
Project Name: Des No 1800086 - SR 45 Added Lanes Project

Subject: Updated list of threatened and endangered species that may occur in your proposed project location or may be affected by your proposed project

To Whom It May Concern:

The attached species list identifies any federally threatened, endangered, proposed and candidate species that may occur within the boundary of your proposed project or may be affected by your proposed project. The list also includes designated critical habitat if present within your proposed project area or affected by your project. This list is provided to you as the initial step of the consultation process required under section 7(c) of the Endangered Species Act, also referred to as Section 7 Consultation.

Section 7 of the Endangered Species Act of 1973 requires that actions authorized, funded, or carried out by Federal agencies not jeopardize federally threatened or endangered species or adversely modify designated critical habitat. To fulfill this mandate, Federal agencies (or their designated non-federal representative) must consult with the Service if they determine their project “may affect” listed species or critical habitat.

Under 50 CFR 402.12(e) (the regulations that implement Section 7 of the Endangered Species Act) the accuracy of this species list should be verified after 90 days. This verification can be completed formally or informally. You may verify the list by visiting the ECOS-IPaC website http://ecos.fws.gov/ipac/ at regular intervals during project planning and implementation and completing the same process you used to receive the attached list. As an alternative, you may contact this Ecological Services Field Office for updates.

Please use the species list provided and visit the U.S. Fish and Wildlife Service’s Region 3 Section 7 Technical Assistance website at - http://www.fws.gov/midwest/endangered/section7/s7process/index.html. This website contains step-by-step instructions which will help you determine if your project will have an adverse effect on listed species and will help lead you through the Section 7 process.

For all **wind energy projects** and **projects that include installing towers that use guy wires or are over 200 feet in height**, please contact this field office directly for assistance, even if no federally listed plants, animals or critical habitat are present within your proposed project or may be affected by your proposed project.

Although no longer protected under the Endangered Species Act, be aware that bald eagles are protected under the Bald and Golden Eagle Protection Act (16 U.S.C. 668 *et seq.*) and Migratory Bird Treaty Act *(*16 U.S.C. 703 *et seq*), as are golden eagles. Projects affecting these species may require measures to avoid harming eagles or may require a permit. If your project is near an eagle nest or winter roost area, see our Eagle Permits website at http://www.fws.gov/midwest/midwestbird/EaglePermits/index.html to help you determine if you can avoid impacting eagles or if a permit may be necessary.

We appreciate your concern for threatened and endangered species. Please include the Consultation Tracking Number in the header of this letter with any request for consultation or correspondence about your project that you submit to our office.

Attachment(s):

- Official Species List

Official Species List

This list is provided pursuant to Section 7 of the Endangered Species Act, and fulfills the requirement for Federal agencies to "request of the Secretary of the Interior information whether any species which is listed or proposed to be listed may be present in the area of a proposed action".

This species list is provided by:

Indiana Ecological Services Field Office
620 South Walker Street
Bloomington, IN 47403-2121
(812) 334-4261

Project Summary

Consultation Code: 03E12000-2021-SLI-0280
Event Code: Some(03E12000-2022-E-01259)
Project Name: Des No 1800086 - SR 45 Added Lanes Project
Project Type:
Project Description: The project is located along SR 45 from the SR 46 intersection to approximately 0.16 mile east of the SR 45 and SR 46 intersection in Bloomington, Monroe County, Indiana. This project involves widening SR 45 to the north in order to accommodate the addition of an eastbound and westbound auxiliary/turn lane and an eastbound bike lane; the multi-use path along the north side of SR 45 will also be shifted north. No bridges or culverts are involved in this project. Suitable summer habitat was identified adjacent to the project area in the form of individual trees exhibiting peeling bark and/or cavities. No trees will need to be removed for this project. A review of the USFWS database for Indiana bat and Northern long-eared bat roosting, hibernacula and captures sites was conducted by the Seymour District on May 4, 2020. The review did not indicate the presence of endangered bat species in or within 0.5 mile of the project area. This project is not within the Critical Habitat Buffer, but is within the buffer of a Priority 1 or Priority 2 Indiana bat hibernacula. New traffic signals will be installed at the SR 45 and SR 46 intersection; temporary lighting may be needed during the construction phase. Construction is anticipated to begin in November 2023.

Project Location:

Approximate location of the project can be viewed in Google Maps: https://www.google.com/maps/@39.1716227,-86.50054469439095,14z

Counties: Monroe County, Indiana

Endangered Species Act Species

There is a total of 3 threatened, endangered, or candidate species on this species list.

Species on this list should be considered in an effects analysis for your project and could include species that exist in another geographic area. For example, certain fish may appear on the species list because a project could affect downstream species. Note that 1 of these species should be considered only under certain conditions.

IPaC does not display listed species or critical habitats under the sole jurisdiction of NOAA Fisheries[1], as USFWS does not have the authority to speak on behalf of NOAA and the Department of Commerce.

See the "Critical habitats" section below for those critical habitats that lie wholly or partially within your project area under this office's jurisdiction. Please contact the designated FWS office if you have questions.

---

1. NOAA Fisheries, also known as the National Marine Fisheries Service (NMFS), is an office of the National Oceanic and Atmospheric Administration within the Department of Commerce.

Mammals

NAME	STATUS
Indiana Bat *Myotis sodalis* There is **final** critical habitat for this species. Your location overlaps the critical habitat. Species profile: https://ecos.fws.gov/ecp/species/5949	Endangered
Northern Long-eared Bat *Myotis septentrionalis* No critical habitat has been designated for this species. This species only needs to be considered under the following conditions: ▪ Incidental take of the NLEB is not prohibited here. Federal agencies may consult using the 4(d) rule streamlined process. Transportation projects may consult using the programmatic process. See www.fws.gov/midwest/endangered/mammals/nleb/index.html Species profile: https://ecos.fws.gov/ecp/species/9045	Threatened

Insects

NAME	STATUS
Monarch Butterfly *Danaus plexippus* No critical habitat has been designated for this species. Species profile: https://ecos.fws.gov/ecp/species/9743	Candidate

Critical habitats

There is 1 critical habitat wholly or partially within your project area under this office's jurisdiction.

NAME	STATUS
Indiana Bat *Myotis sodalis* https://ecos.fws.gov/ecp/species/5949#crithab	Final

United States Department of the Interior

FISH AND WILDLIFE SERVICE
Indiana Ecological Services Field Office
620 South Walker Street
Bloomington, IN 47403-2121
Phone: (812) 334-4261 Fax: (812) 334-4273
http://www.fws.gov/midwest/Endangered/section7/s7process/step1.html

In Reply Refer To: March 22, 2021
Consultation code: 03E12000-2021-I-0280
Event Code: 03E12000-2021-E-04665
Project Name: Des No 1800086 - SR 45 Added Lanes Project

Subject: Concurrence verification letter for the 'Des No 1800086 - SR 45 Added Lanes Project' project under the revised February 5, 2018, FHWA, FRA, FTA Programmatic Biological Opinion for Transportation Projects within the Range of the Indiana Bat and Northern Long-eared Bat.

To whom it may concern:

The U.S. Fish and Wildlife Service (Service) has received your request to verify that the **Des No 1800086 - SR 45 Added Lanes Project** (Proposed Action) may rely on the concurrence provided in the February 5, 2018, FHWA, FRA, FTA Programmatic Biological Opinion for Transportation Projects within the Range of the Indiana Bat and Northern Long-eared Bat (PBO) to satisfy requirements under Section 7(a)(2) of the Endangered Species Act of 1973 (ESA) (87 Stat. 884, as amended; 16 U.S.C 1531 *et seq.*).

Based on the information you provided (Project Description shown below), you have determined that the Proposed Action is within the scope and adheres to the criteria of the PBO, including the adoption of applicable avoidance and minimization measures, and may affect, but is <u>not likely to adversely affect</u> (NLAA) the endangered Indiana bat (*Myotis sodalis*) and/or the threatened Northern long-eared bat (*Myotis septentrionalis*).

The Service has 14 calendar days to notify the lead Federal action agency or designated non-federal representative if we determine that the Proposed Action does not meet the criteria for a NLAA determination under the PBO. If we do <u>not</u> notify the lead Federal action agency or designated non-federal representative within that timeframe, you may proceed with the Proposed Action under the terms of the NLAA concurrence provided in the PBO. This verification period allows Service Field Offices to apply local knowledge to implementation of the PBO, as we may identify a small subset of actions having impacts that were unanticipated. In such instances, Service Field Offices may request additional information that is necessary to verify inclusion of the proposed action under the PBO.

For Proposed Actions that include bridge/structure removal, replacement, and/or maintenance activities: If your initial bridge/structure assessments failed to detect Indiana bats, but you later detect bats during construction, please submit the Post Assessment Discovery of Bats at Bridge/Structure Form (User Guide Appendix E) to this Service Office. In these instances, potential incidental take of Indiana bats may be exempted provided that the take is reported to the Service.

If the Proposed Action is modified, or new information reveals that it may affect the Indiana bat and/or Northern long-eared bat in a manner or to an extent not considered in the PBO, further review to conclude the requirements of ESA Section 7(a)(2) may be required. If the Proposed Action may affect any other federally-listed or proposed species, and/or any designated critical habitat, additional consultation between the lead Federal action agency and this Service Office is required. If the proposed action has the potential to take bald or golden eagles, additional coordination with the Service under the Bald and Golden Eagle Protection Act may also be required. In either of these circumstances, please contact this Service Office.

Project Description

The following project name and description was collected in IPaC as part of the endangered species review process.

Name

Des No 1800086 - SR 45 Added Lanes Project

Description

The project is located along SR 45 from the SR 46 intersection to approximately 0.16 mile east of the SR 45 and SR 46 intersection in Bloomington, Monroe County, Indiana. This project involves widening SR 45 to the north in order to accommodate the addition of an eastbound and westbound auxiliary/turn lane and an eastbound bike lane; the multi-use path along the north side of SR 45 will also be shifted north. No bridges or culverts are involved in this project. Suitable summer habitat was identified adjacent to the project area in the form of individual trees exhibiting peeling bark and/or cavities. No trees will need to be removed for this project. A review of the USFWS database for Indiana bat and Northern long-eared bat roosting, hibernacula and captures sites was conducted by the Seymour District on May 4, 2020. The review did not indicate the presence of endangered bat species in or within 0.5 mile of the project area. This project is not within the Critical Habitat Buffer, but is within the buffer of a Priority 1 or Priority 2 Indiana bat hibernacula. New traffic signals will be installed at the SR 45 and SR 46 intersection; temporary lighting may be needed during the construction phase. Construction is anticipated to begin in November 2023.

Determination Key Result

Based on your answers provided, this project(s) may affect, but is not likely to adversely affect the endangered Indiana bat and/or the threatened Northern long-eared bat, therefore, consultation with the U.S. Fish and Wildlife Service pursuant to Section 7(a)(2) of the Endangered Species Act of 1973 (ESA) (87 Stat. 884, as amended 16 U.S.C. 1531 *et seq.*) is required. However, also based on your answers provided, this project may rely on the concurrence provided in the revised February 5, 2018, FHWA, FRA, FTA Programmatic Biological Opinion for Transportation Projects within the Range of the Indiana Bat and Northern Long-eared Bat.

Qualification Interview

1. Is the project within the range of the Indiana bat[1]?

   [1] See Indiana bat species profile

   Automatically answered
   Yes

2. Is the project within the range of the Northern long-eared bat[1]?

   [1] See Northern long-eared bat species profile

   Automatically answered
   Yes

3. Which Federal Agency is the lead for the action?

   A) Federal Highway Administration (FHWA)

4. Are *all* project activities limited to non-construction[1] activities only? (examples of non-construction activities include: bridge/abandoned structure assessments, surveys, planning and technical studies, property inspections, and property sales)

   [1] Construction refers to activities involving ground disturbance, percussive noise, and/or lighting.

   No

5. Does the project include *any* activities that are **greater than** 300 feet from existing road/rail surfaces[1]?

   [1] Road surface is defined as the actively used [e.g. motorized vehicles] driving surface and shoulders [may be pavement, gravel, etc.] and rail surface is defined as the edge of the actively used rail ballast.

   No

6. Does the project include *any* activities **within** 0.5 miles of a known Indiana bat and/or NLEB hibernaculum[1]?

   [1] For the purpose of this consultation, a hibernaculum is a site, most often a cave or mine, where bats hibernate during the winter (see suitable habitat), but could also include bridges and structures if bats are found to be hibernating there during the winter.

   No

7. Is the project located **within** a karst area?

   Yes

8. Will the project include *any* type of activity that could impact a **known** hibernaculum[1], or impact a karst feature (e.g., sinkhole, losing stream, or spring) that could result in effects to a **known** hibernaculum?

   [1] For the purpose of this consultation, a hibernaculum is a site, most often a cave or mine, where bats hibernate during the winter (see suitable habitat), but could also include bridges and structures if bats are found to be hibernating there during the winter.

   No

9. Is there *any* suitable[1] summer habitat for Indiana Bat or NLEB **within** the project action area[2]? (includes any trees suitable for maternity, roosting, foraging, or travelling habitat)

   [1] See the Service's summer survey guidance for our current definitions of suitable habitat.

   [2] The action area is defined as all areas to be affected directly or indirectly by the Federal action and not merely the immediate area involved in the action (50 CFR Section 402.02). Further clarification is provided by the national consultation FAQs.

   Yes

10. Will the project remove *any* suitable summer habitat[1] and/or remove/trim any existing trees **within** suitable summer habitat?

    [1] See the Service's summer survey guidance for our current definitions of suitable habitat.

    No

11. Does the project include activities **within documented Indiana bat habitat**[1][2]?

    [1] Documented roosting or foraging habitat – for the purposes of this consultation, we are considering documented habitat as that where Indiana bats and/or NLEB have actually been captured and tracked using (1) radio telemetry to roosts; (2) radio telemetry biangulation/triangulation to estimate foraging areas; or (3) foraging areas with repeated use documented using acoustics. Documented roosting habitat is also considered as suitable summer habitat within 0.25 miles of documented roosts.)

    [2] For the purposes of this key, we are considering documented corridors as that where Indiana bats and/or NLEB have actually been captured and tracked to using (1) radio telemetry; or (2) treed corridors located directly between documented roosting and foraging habitat.

    No

12. Does the project include activities **within documented NLEB habitat**[1][2]?

    [1] Documented roosting or foraging habitat – for the purposes of this consultation, we are considering documented habitat as that where Indiana bats and/or NLEB have actually been captured and tracked using (1) radio telemetry to roosts; (2) radio telemetry biangulation/triangulation to estimate foraging areas; or (3) foraging areas with repeated use documented using acoustics. Documented roosting habitat is also considered as suitable summer habitat within 0.25 miles of documented roosts.)

    [2] For the purposes of this key, we are considering documented corridors as that where Indiana bats and/or NLEB have actually been captured and tracked to using (1) radio telemetry; or (2) treed corridors located directly between documented roosting and foraging habitat.

    No

13. Does the project include wetland or stream protection activities associated with compensatory wetland mitigation?

    No

14. Does the project include slash pile burning?

    No

15. Does the project include *any* bridge removal, replacement, and/or maintenance activities (e.g., any bridge repair, retrofit, maintenance, and/or rehabilitation work)?

    No

16. Does the project include the removal, replacement, and/or maintenance of *any* structure other than a bridge? (e.g., rest areas, offices, sheds, outbuildings, barns, parking garages, etc.)

    No

17. Will the project involve the use of **temporary** lighting *during* the active season?

    Yes

18. Is there *any* suitable habitat **within** 1,000 feet of the location(s) where **temporary** lighting will be used?

    Yes

19. Will the project install new or replace existing **permanent** lighting?

    Yes

20. Is there *any* suitable habitat **within** 1,000 feet of the location(s) where **permanent** lighting will be installed or replaced?

    Yes

21. Does the project include percussives or other activities (**not including tree removal/ trimming or bridge/structure work**) that will increase noise levels above existing traffic/ background levels?

    No

22. Are *all* project activities that are **not associated with** habitat removal, tree removal/ trimming, bridge and/or structure activities, temporary or permanent lighting, or use of percussives, limited to actions that DO NOT cause any additional stressors to the bat species?

    Examples: lining roadways, unlighted signage , rail road crossing signals, signal lighting, and minor road repair such as asphalt fill of potholes, etc.

    Yes

23. Will the project raise the road profile **above the tree canopy**?

    No

24. Are the project activities that are not associated with habitat removal, tree removal/ trimming, bridge and/or structure activities, temporary or permanent lighting, or use of percussives consistent with a No Effect determination in this key?

    Automatically answered
    Yes, other project activities are limited to actions that DO NOT cause any additional stressors to the bat species as described in the BA/BO

25. **General AMM 1**
    Will the project ensure *all* operators, employees, and contractors working in areas of known or presumed bat habitat are aware of *all* FHWA/FRA/FTA (Transportation Agencies) environmental commitments, including all applicable Avoidance and Minimization Measures?

    Yes

26. **Hibernacula AMM 1**
    Will the project ensure that on-site personnel will use best management practices[1], secondary containment measures, or other standard spill prevention and countermeasures to avoid impacts to possible hibernacula?

    [1] Coordinate with the appropriate Service Field Office on recommended best management practices for karst in your state.

    Yes

27. **Hibernacula AMM 1**
    Will the project ensure that, where practicable, a 300 foot buffer will be employed to separate fueling areas and other major containment risk activities from caves, sinkholes, losing streams, and springs in karst topography?

    Yes

28. **Lighting AMM 1**
    Will *all* **temporary** lighting be directed away from suitable habitat during the active season?

    Yes

29. **Lighting AMM 2**
    Does the lead agency use the BUG (Backlight, Uplight, and Glare) system developed by the Illuminating Engineering Society[1][2] to rate the amount of light emitted in unwanted directions?

    [1] Refer to Fundamentals of Lighting - BUG Ratings

    [2] Refer to The BUG System—A New Way To Control Stray Light

    Yes

30. **Lighting AMM 2**
    Will the **permanent** lighting be designed to be as close to 0 for all three BUG ratings as possible, with a priority of "uplight" of 0 and "backlight" as low as practicable?

    Yes

Project Questionnaire

1. Have you made a No Effect determination for *all* other species indicated on the FWS IPaC generated species list?

   N/A

2. Have you made a May Affect determination for *any* other species on the FWS IPaC generated species list?

   N/A

Avoidance And Minimization Measures (AMMs)

This determination key result includes the committment to implement the following Avoidance and Minimization Measures (AMMs):

LIGHTING AMM 1

Direct temporary lighting away from suitable habitat during the active season.

LIGHTING AMM 2

When installing new or replacing existing permanent lights, use downward-facing, full cut-off lens lights (with same intensity or less for replacement lighting); or for those transportation agencies using the BUG system developed by the Illuminating Engineering Society, be as close to 0 for all three ratings with a priority of "uplight" of 0 and "backlight" as low as practicable.

GENERAL AMM 1

Ensure all operators, employees, and contractors working in areas of known or presumed bat habitat are aware of all FHWA/FRA/FTA (Transportation Agencies) environmental commitments, including all applicable AMMs.

HIBERNACULA AMM 1

For projects located within karst areas, on-site personnel will use best management practices, secondary containment measures, or other standard spill prevention and countermeasures to avoid impacts to possible hibernacula. Where practicable, a 300 foot buffer will be employed to separate fueling areas and other major containment risk activities from caves, sinkholes, losing streams, and springs in karst topography.

Determination Key Description: FHWA, FRA, FTA Programmatic Consultation For Transportation Projects Affecting NLEB Or Indiana Bat

This key was last updated in IPaC on December 29, 2020. Keys are subject to periodic revision.

This decision key is intended for projects/activities funded or authorized by the Federal Highway Administration (FHWA), Federal Railroad Administration (FRA), and/or Federal Transit Administration (FTA), which may require consultation with the U.S. Fish and Wildlife Service (Service) under Section 7 of the Endangered Species Act (ESA) for the endangered **Indiana bat** (*Myotis sodalis*) and the threatened **Northern long-eared bat** (NLEB) (*Myotis septentrionalis*).

This decision key should only be used to verify project applicability with the Service's February 5, 2018, FHWA, FRA, FTA Programmatic Biological Opinion for Transportation Projects. The programmatic biological opinion covers limited transportation activities that may affect either bat species, and addresses situations that are both likely and not likely to adversely affect either bat species. This decision key will assist in identifying the effect of a specific project/activity and applicability of the programmatic consultation. The programmatic biological opinion is not intended to cover all types of transportation actions. Activities outside the scope of the programmatic biological opinion, or that may affect ESA-listed species other than the Indiana bat or NLEB, or any designated critical habitat, may require additional ESA Section 7 consultation.