

US 33 over Blue River ABC with Steel

INDOT Bridge Design Conference

February 27, 2024

- Welcome!
- Agenda:
  - Introduction by Mrs. Stephanie Wagner – INDOT's current approach to ABC
  - Project walkthrough (design) by Mr. Brandon Arnold
  - Project walkthrough (construction) by Mr. Dan McCoy
  - Open Question and Answer period

- Ask questions at any time!
- This presentation is for you!!

• Project Contact Information

INDOT - Project Manager
Mr. Damien Perry
5333 Hatfield Road
Fort Wayne, IN 46808
dperry1@indot.in.gov
(260) 969-8266

USI - Project Manager
Mr. Brandon Arnold, PE
824 Lincolnway, Loft 3A
LaPorte, IN 46350
barnold@usiconsultants.com
(317) 571-8464

INDOT - Area Engineer
Mr. Brad Taylor, PE
5333 Hatfield Road
Fort Wayne, IN 46808
brtaylor@indot.in.gov
(260) 438-2063

ERI - President
Mr. Kurt Heidenreich,
PE, SE, CPESC
11020 Diebold Road
Fort Wayne, IN 46845
kurt@eri.consulting
(260) 490-1025 Ext 210

RL McCoy - Engineer
Mr. Daniel M. McCoy, PE
7898 E. Lincolnway
Columbia City, IN 46725
danmccoy@rlmccoy.net
(260) 625-3443

- Accelerated Bridge Construction (ABC)
  - FHWA Map of bridge projects built with UHPC as of end of 2021:

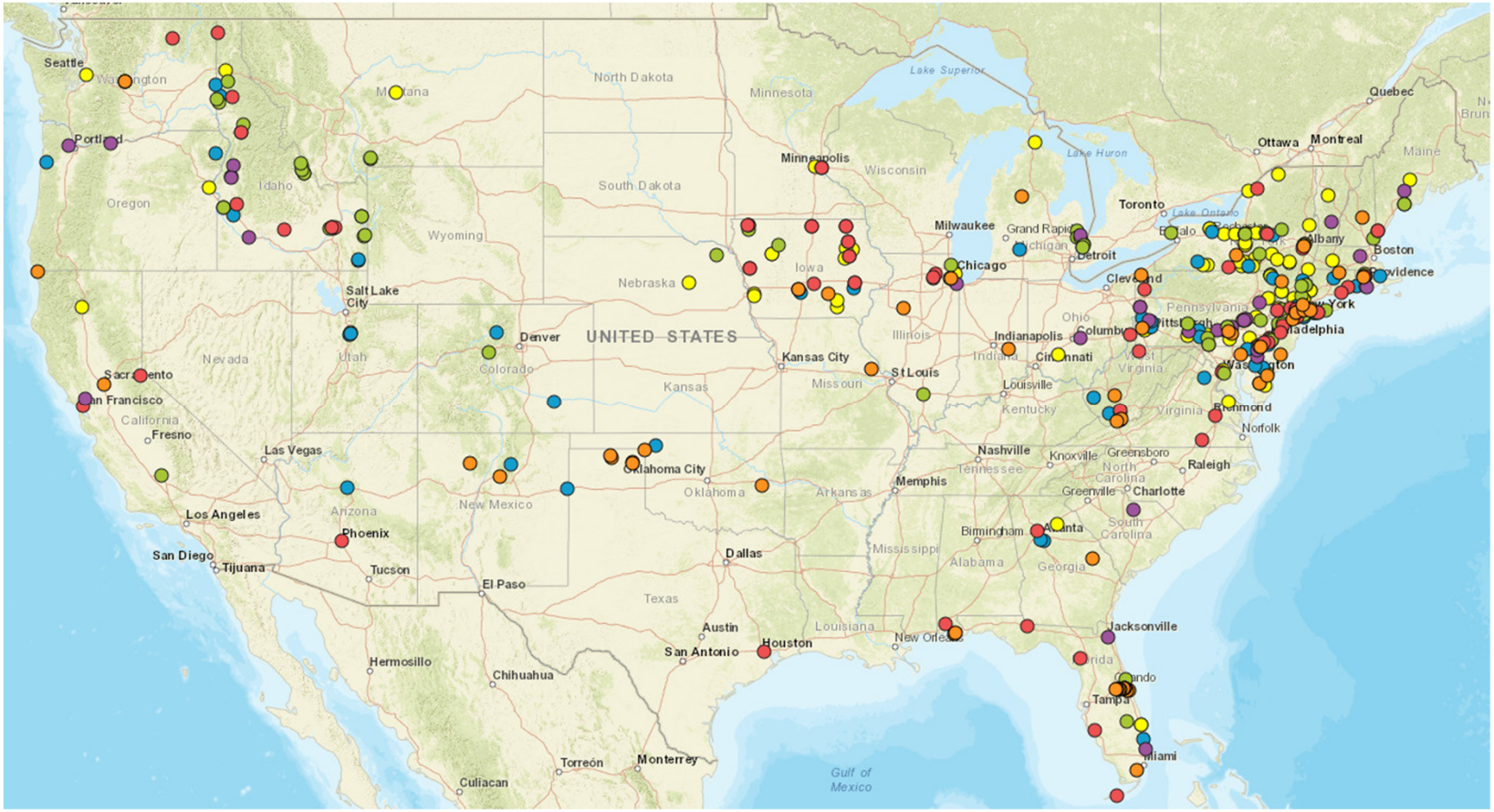

- INDOT's Current Approach to ABC

402.10 ACCELERATED CONSTRUCTION

The concept of accelerated construction is increasing in popularity and frequency of use. If it is determined that a project can benefit from an accelerated-construction method, this shall be coordinated with the project manager. This type of construction shall be evaluated individually for each project, and shall not be considered for each structure size and type analysis.

Accelerated Bridge Design

- Bridge Design Aids
- Additional Resources
  - Utah DOT Structures Design and Detailing Manual

• INDOT's Current Approach to ABC

https://www.udot.Utah.gov/connect/business/structures-geotechnical-guidance-manuals/

Utah Department of Transportation
4501 South 2700 West
Salt Lake City, UT 84114

Project:	Hypothetical Bridge Project		
By:	JJS	Checked:	CELS
Date:	8/30/2014		8/30/2014
Sheet No.	1 of 3		

ABC Rating Procedure — June 2010

Enter values for each aspect of the project. Attach applicable supporting data.

Average Daily Traffic Combined on and under	5	0	No traffic impacts
		1	Less than 5000
		2	5000 to 10000
		3	10000 to 15000
		4	15000 to 20000
		5	More than 20000 or any Interstate Highway
Delay/Detour Time	2	0	No delays
		1	Less than 5 minutes
		2	5-10 minutes
		3	10-15 minutes
		4	15-20 minutes
		5	More than 20 minutes
Bridge Classification	1	1	Normal Bridge
		3	Essential Bridge
		5	Critical Bridge
User Costs	4	0	No user costs
		1	Less than $10,000
		2	$10,000 to $50,000
		3	$50,000 to $75,000
		4	$75,000 to $100,000
		5	More than $100,000
Economy of Scale (total number of spans)	2	0	1 span
		1	2 to 3 spans
		2	4 to 5 spans
		3	More than 5 spans
Use of Typical Details	1	1	Complex geometry or unfavorable site conditions
		3	Some complexity, but favorable site conditions
		5	Simple geometry and favorable site conditions
Safety	5	1	Short duration impact with simple MOT scheme
		2	Short duration impact with multiple traffic shifts
		3	Normal duration impact with multiple traffic shifts
		4	Extended duration impact with multiple traffic shifts
		5	Extended duration impact with complex MOT scheme

Utah Department of Transportation
4501 South 2700 West
Salt Lake City, UT 84114

Project:	Hypothetical Bridge Project		
By:	JJS	Checked:	CELS
Date:	8/30/2014		8/30/2014
Sheet No.	2 of 3		

ABC Rating Procedure — June 2010

Note: Do not adjust weight factors without prior consultation with UDOT Structures Division Project Manager

ABC RATING SCORE FACTORS AND WEIGHTS

	Score	Weight Factor	Adjusted Score	Maximum Score	Adjusted Score
Average Daily Traffic	5	10	50	5	50
Delay/Detour Time	2	10	20	5	50
Bridge Classification	1	5	5	5	25
User Costs	4	10	40	5	50
Economy of Scale	2	3	6	3	9
Use of Typical Details	1	3	3	5	15
Safety	5	10	50	5	50
Railroad Impacts	0	5	0	5	25
		Total Score	174	Max. Score	274

ABC Rating Score: 64

ABC Rating Score = (Total Score)/(Max. Score)*100
The ABC Rating Score is driven by the four most heavily weighted factors: Average Daily Traffic, Delay/Detour Time, User Costs and Safety.

Cost Considerations:
Calculate the following costs for use in determining the lowest total project cost

TOTAL PROJECT COST EVALUATION

	Alternative #1	Alternative #2
Construction Costs	$2,500,000	$3,000,000
User Costs	$1,000,000	$250,000
Total Project Cost	**$3,500,000**	**$3,250,000**

Utah Department of Transportation
4501 South 2700 West
Salt Lake City, UT 84114

Project:	Hypothetical Bridge Project		
By:	JJS	Checked:	CELS
Date:	8/30/2014		8/30/2014
Sheet No.	3 of 3		

ABC Decision Flowchart — June 2010

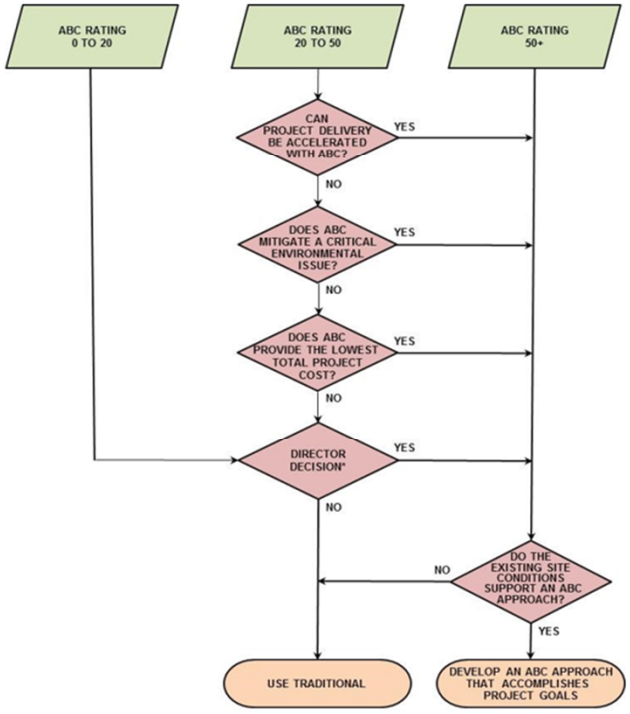

• INDOT's Current Approach to ABC

https://wisconsindot.gov/dtsdManuals/strct/manuals/bridge/ch7.pdf

% Weight	Category	Decision-Making Item	Possible Points	Points Allocated	Scoring Guidance
17%	Disruptions (on/under Bridge)	**Railroad on Bridge?**	8		0 No railroad track on bridge 4 Minor railroad track on bridge 8 Major railroad track on bridge
		Railroad under Bridge?	3		0 No railroad track under bridge 1 Minor railroad track under bridge 3 Major railroad track(s) under Bridge
		Over Navigation Channel that needs to remain open?	6		0 No navigation channel that needs to remain open 3 Minor navigation channel that needs to remain open 6 Major navigation channel that needs to remain open
8%	Urgency	**Emergency Replacement?**	8		0 Not emergency replacement 4 Emergency replacement on minor roadway 8 Emergency replacement on major roadway
23%	User Costs and Delays	**ADT and/or ADTT** (Combined Construction Year ADT on and under bridge)	6		0 No traffic impacts 1 ADT under 10,000 2 ADT 10,000 to 25,000 3 ADT 25,000 to 50,000 4 ADT 50,000 to 75,000 5 ADT 75,000 to 100,000 6 ADT 100,000+
		Required Lane Closures/Detours? (Length of Delay to Traveling Public)	6		0 Delay 0-5 minutes 1 Delay 5-15 minutes 2 Delay 15-25 minutes 3 Delay 25-35 minutes 4 Delay 35-45 minutes 5 Delay 45-55 minutes 6 Delay 55+ minutes
		Are only Short Term Closures Allowable?	5		0 Alternatives available for staged construction 3 Alternatives available for staged construction, but undesirable 5 No alternatives available for staged construction
		Impact to Economy (Local business access, impact to manufacturing etc.)	6		0 Minor or no impact to economy 3 Moderate impact to economy 6 Major impact to economy
14%	Construction Time	**Impacts Critical Path of the Total Project?**	6		0 Minor or no impact to critical path of the total project 3 Moderate impact to critical path of the total project 6 Major impact to critical path of the total project
		Restricted Construction Time (Environmental schedules, Economic Impact – e.g. local business access, Holiday schedules, special events, etc.)	8		0 No construction time restrictions 3 Minor construction time restrictions 6 Moderate construction time restrictions 8 Major construction time restrictions
5%	Environment	**Does ABC mitigate a critical environmental impact or sensitive environmental issue?**	5		0 ABC does not mitigate an environmental issue 2 ABC mitigates a minor environmental issue 3 ABC mitigates several minor environmental issues 4 ABC mitigates a major environmental issue 5 ABC mitigates several major environmental issues
3%	Cost	**Compare *Comprehensive* Construction Costs** (Compare conventional vs. prefabrication)	3		0 ABC costs are 25%+ higher than conventional costs 1 ABC costs are 1% to 25% higher than conventional costs 2 ABC costs are equal to conventional costs 3 ABC costs are lower than conventional costs
18%	Risk Management	**Does ABC allow management of a particular risk?**	6		0 - 6 Use judgment to determine if risks can be managed through ABC that aren't covered in other topics
		Safety (Worker Concerns)	6		0 Short duration impact with TMP Type 1 3 Normal duration impact with TMP Type 2 6 Extended duration impact with TMP Type 3-4
		Safety (Traveling Public Concerns)	6		0 Short duration impact with TMP Type 1 3 Normal duration impact with TMP Type 2 6 Extended duration impact with TMP Type 3-4
12%	Other	**Economy of Scale** (repetition of components in a bridge or bridges in a project) (Total spans = sum of all spans on all bridges on the project)	5		0 1 total span 1 2 total spans 2 3 total spans 3 4 total spans 4 5 total spans 5 6+ total spans
		Weather Limitations for conventional construction?	2		0 No weather limitations for conventional construction 1 Moderate limitations for conventional construction 2 Severe limitations for conventional construction
		Use of Typical Standard Details (Complexity)	5		0 No typical standard details will be used 3 Some typical standard details will be used 5 All typical standard details will be used
			Sum of Points:	0	(100 Possible Points)

Figure 7.2-1
ABC Decision-Making Matrix

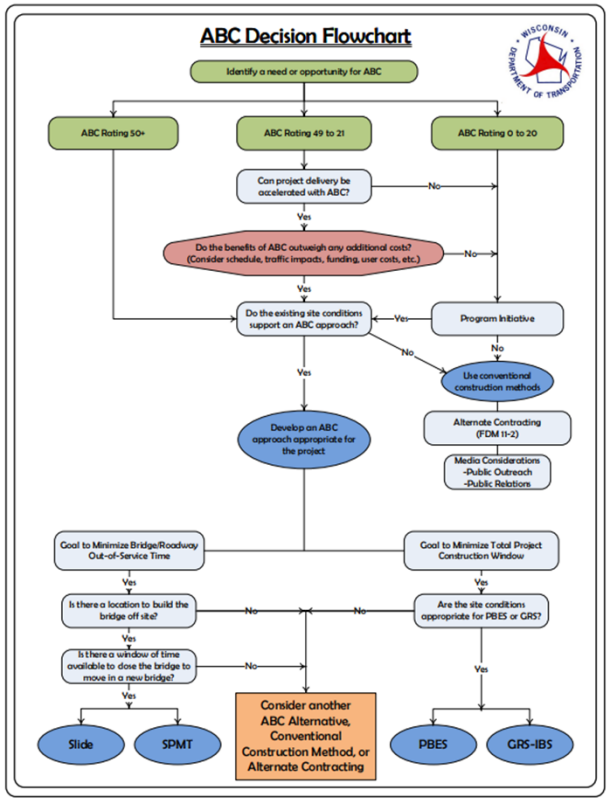

Figure 7.2-2
ABC Decision-Making Flowchart

- US 33 over Blue River – Design Resources
  - US 6 over Keg Creek bridge replacement project in Pottawattamie County, Iowa – SHRP Project R04, Project Number BRF-006-I(114)--38-78

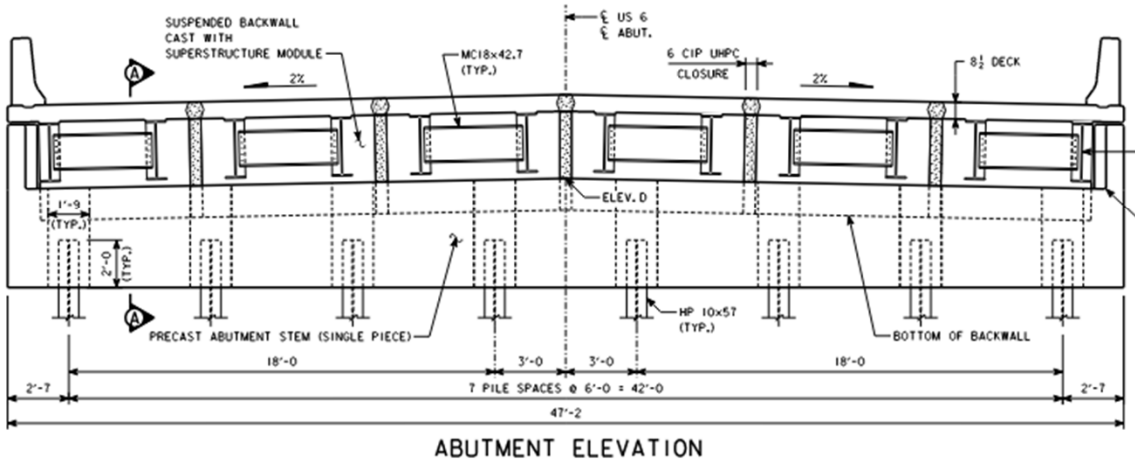

ABUTMENT ELEVATION



- US 33 over Blue River – Design Resources
  - Strategic Highway Research Program (SHRP) 2 – Innovative Bridge Designs for Rapid Renewal – ABC Toolkit (S2-R04-RR-2)

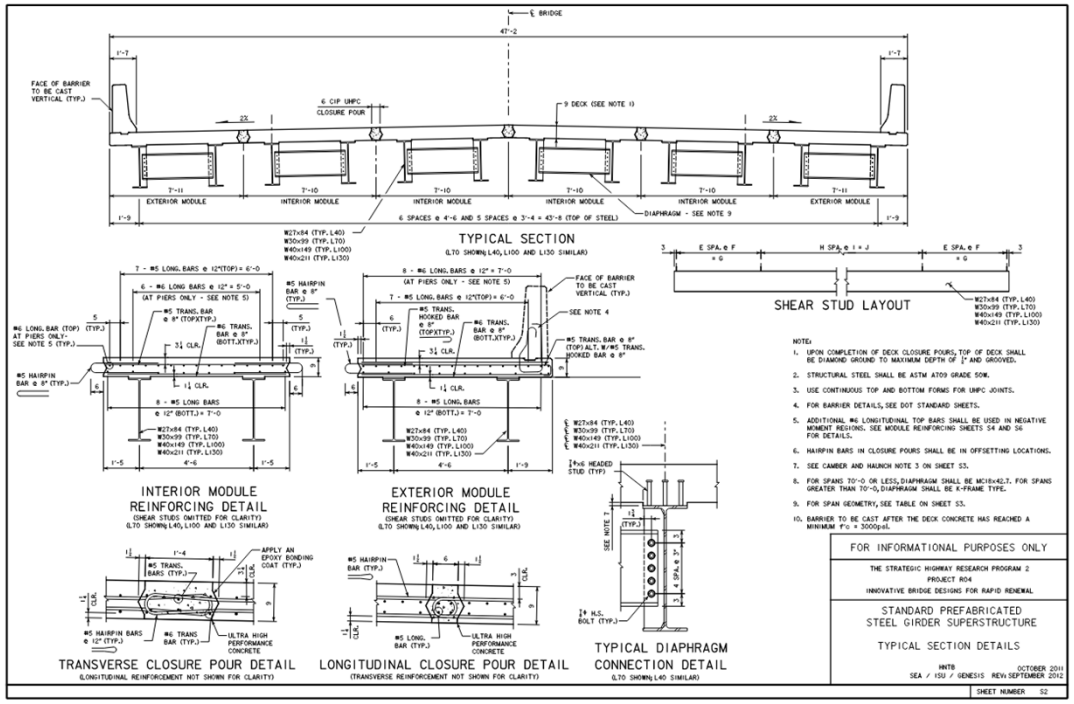

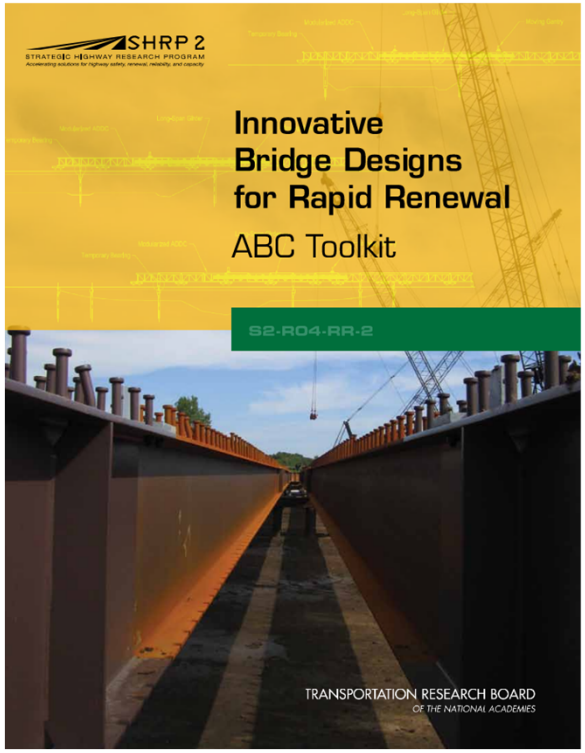

- US 33 over Blue River – Design Resources
  - AASHTO LRFD Guide Specs for ABC
    - Part 2 for Construction

3.6.2.4.1—Development of Deformed Reinforcing Bars in Tension in UHPC

The basic development length for straight or hooked deformed bars cast into UHPC, l_{dtu}, shall satisfy:

For reinforcing bars with:

$$f_y \leq 75 \text{ ksi}$$

$$l_{dtu} \geq 8d_b \qquad (3.6.2.4.1\text{-}1)$$

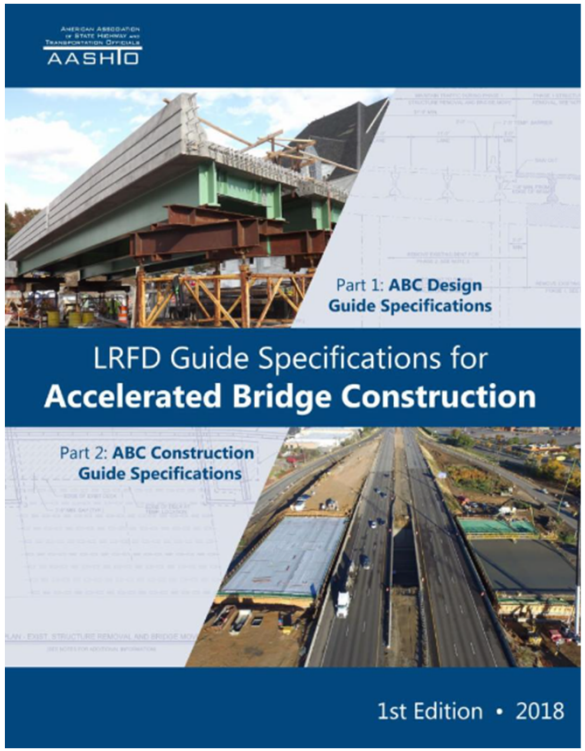

• US 33 over Blue River – Design Resources

• FHWA-HRT-14-084

Table 1. Typical field-cast UHPC material properties.

Material Characteristic	Average Result
Density	155 lb/ft³ (2,480 kg/m³)
Compressive strength (ASTM C39; 28-day strength)	24 ksi (165 MPa)
Modulus of elasticity (ASTM C469; 28-day modulus)	7,000 ksi (48 GPa)
Direct tension cracking strength (uniaxial tension with multiple cracking)	1.2 ksi (8.5 MPa)
Split cylinder cracking strength (ASTM C496)	1.3 ksi (9.0 MPa)
Prism flexure cracking strength (ASTM C1018; 12-inch (305-mm) span)	1.3 ksi (9.0 MPa)
Tensile strain capacity before crack localization and fiber debond	> 0.003
Long-term creep coefficient (ASTM C512; 11.2 ksi (77 MPa) load)	0.78
Long-term shrinkage (ASTM C157; initial reading after set)	555 microstrain
Total shrinkage (embedded vibrating wire gage)	790 microstrain
Coefficient of thermal expansion (AASHTO TP60–00)	8.2 x10^{-6} inches/inches/°F (14.7 x10^{-6} mm/mm/°C)
Chloride ion penetrability (ASTM C1202; 28-day test)	360 coulombs
Chloride ion permeability (AASHTO T259; 0.5-inch (12.7-mm) depth)	< 0.10 lb/yd³ (< 0.06 kg/m³)
Scaling resistance (ASTM C672)	No scaling
Abrasion resistance (ASTM C944 2x weight; ground surface)	0.026 oz. (0.73 g) lost
Freeze-thaw resistance (ASTM C666A; 600 cycles)	RDM = 99 percent
Alkali-silica reaction (ASTM C1260; tested for 28 days)	Innocuous

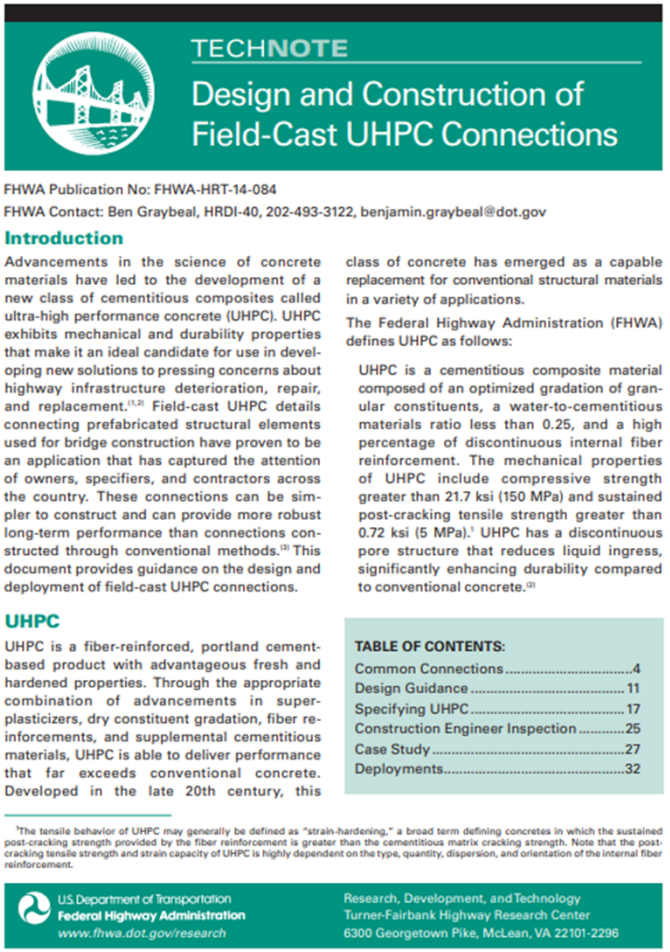

TECHNOTE

Design and Construction of Field-Cast UHPC Connections

FHWA Publication No: FHWA-HRT-14-084

FHWA Contact: Ben Graybeal, HRDI-40, 202-493-3122, benjamin.graybeal@dot.gov

Introduction

Advancements in the science of concrete materials have led to the development of a new class of cementitious composites called ultra-high performance concrete (UHPC). UHPC exhibits mechanical and durability properties that make it an ideal candidate for use in developing new solutions to pressing concerns about highway infrastructure deterioration, repair, and replacement.[1,2] Field-cast UHPC details connecting prefabricated structural elements used for bridge construction have proven to be an application that has captured the attention of owners, specifiers, and contractors across the country. These connections can be simpler to construct and can provide more robust long-term performance than connections constructed through conventional methods.[3] This document provides guidance on the design and deployment of field-cast UHPC connections.

UHPC

UHPC is a fiber-reinforced, portland cement-based product with advantageous fresh and hardened properties. Through the appropriate combination of advancements in superplasticizers, dry constituent gradation, fiber reinforcements, and supplemental cementitious materials, UHPC is able to deliver performance that far exceeds conventional concrete. Developed in the late 20th century, this class of concrete has emerged as a capable replacement for conventional structural materials in a variety of applications.

The Federal Highway Administration (FHWA) defines UHPC as follows:

> UHPC is a cementitious composite material composed of an optimized gradation of granular constituents, a water-to-cementitious materials ratio less than 0.25, and a high percentage of discontinuous internal fiber reinforcement. The mechanical properties of UHPC include compressive strength greater than 21.7 ksi (150 MPa) and sustained post-cracking tensile strength greater than 0.72 ksi (5 MPa).[1] UHPC has a discontinuous pore structure that reduces liquid ingress, significantly enhancing durability compared to conventional concrete.[2]

TABLE OF CONTENTS:

Common Connections 4
Design Guidance 11
Specifying UHPC 17
Construction Engineer Inspection 25
Case Study 27
Deployments 32

[1]The tensile behavior of UHPC may generally be defined as "strain-hardening," a broad term defining concretes in which the sustained post-cracking strength provided by the fiber reinforcement is greater than the cementitious matrix cracking strength. Note that the post-cracking tensile strength and strain capacity of UHPC is highly dependent on the type, quantity, dispersion, and orientation of the internal fiber reinforcement.

U.S. Department of Transportation
Federal Highway Administration
www.fhwa.dot.gov/research

Research, Development, and Technology
Turner-Fairbank Highway Research Center
6300 Georgetown Pike, McLean, VA 22101-2296

- Accelerated Bridge Construction (ABC) – INDOT Example
  - US 52 over Mud Creek
    - October 2020 Letting
    - Rush County, IN
    - Contract No. B-35450
    - DES No. 1006266
    - Bridge File No. 052-70-10277
    - 3 Span RC Slab bridge built with PBES and UHPC joints, including the superstructure, substructure, and approach slabs

US 33 over Blue River, DES No. 1600470, Contract No. B-41127
2024 INDOT Bridge Design Conference



- US 33 over Blue River – **How Did it Become ABC?**
  - Originally scoped as a typical 3R Open Roads Bridge Replacement project
  - USI attended INDOT-sponsored ABC Conference in March 2018
  - USI presented US 33 over Blue River as possible test case project for ABC at end of conference
  - INDOT formally approved change to ABC design and to 4R standards on April 2, 2019

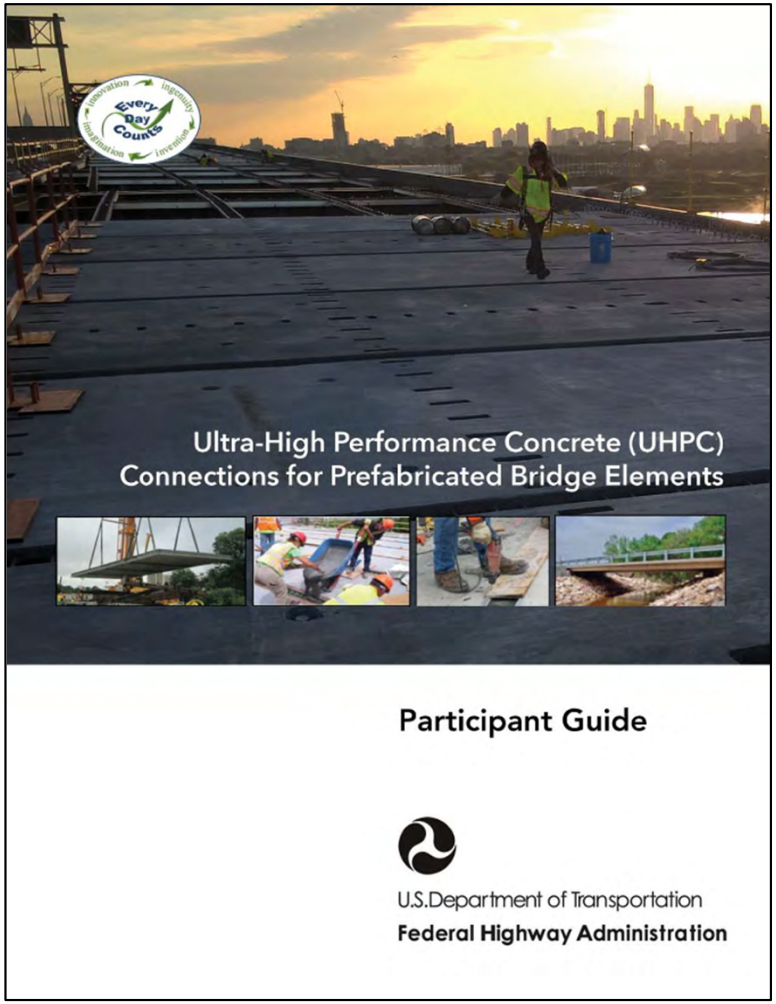

- US 33 over Blue River – **How Much Did it Cost?**
  - December 7, 2022 Letting
  - Engineer's estimate was $3,936,370.73
  - RL McCoy winning bid was $4,352,663.89
    - 10.6% over estimate
  - Traditional, phased construction estimate was $3,351,553.73
  - ABC premium cost (ABC Eng est. – Traditional Eng est.) = $584,817
    - 17.5% increase
    - Ballpark INDOT estimate when project began was that ABC would add 20% cost to the project

- Project Schedule
  - Letting — December 7, 2022
  - Intermediate Completion Date — October 1, 2023
  - Completion Date — October 15, 2023
  - Road Closure Time — 90 Calendar Days

US 33 over Blue River, DES No. 1600470, Contract No. B-41127
2024 INDOT Bridge Design Conference

- Project Location

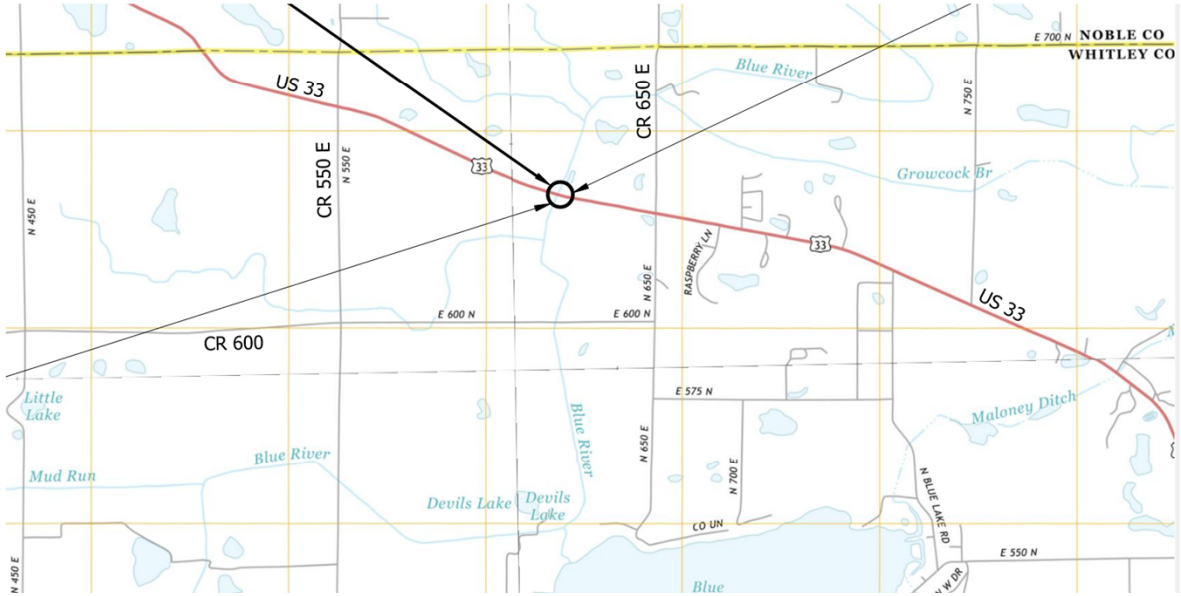

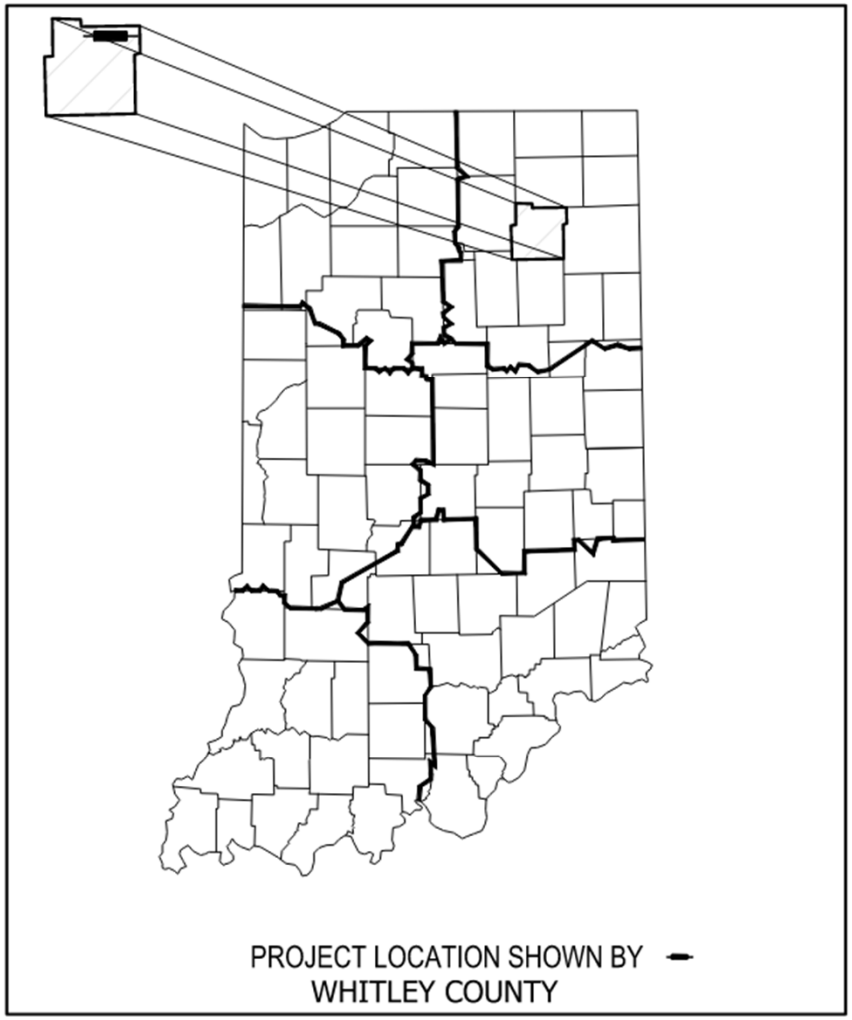

LATITUDE: 41°15'28.9" N LONGITUDE: 85°22'19.9" W

- US 33 over Blue River
  - Maintenance of Traffic (MOT)
    - Full Closure – 90 Calendar Days

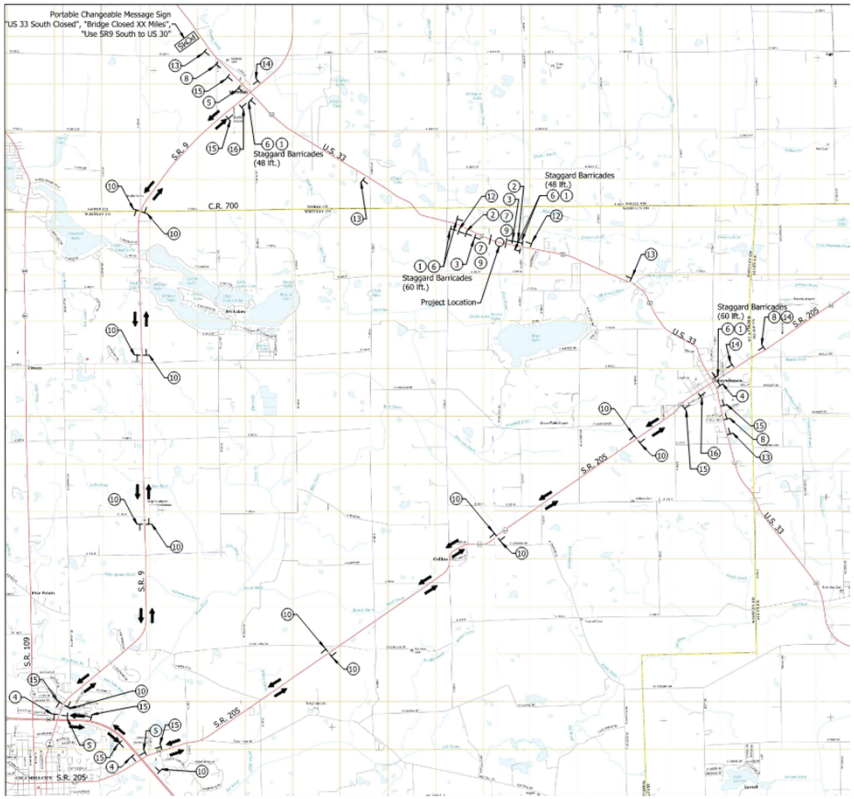

Intent of road closure timeframe is to build the PBES while road is open.

- Existing Conditions



- Existing Conditions



- Existing Conditions



- Existing Conditions



- Existing Conditions



- Existing Conditions



- Existing Conditions



- Existing Conditions



- Existing Conditions



- Existing Conditions



3-Span,
RC Girder,
92 ft long

- Existing Conditions



- Existing Conditions



- Existing Conditions



- Project Scope
  - Roadway reconstruction to 4R standards
    - Increase substandard superelevation to 2.30%
    - Widen shoulders to 8’-0” min (11’-0” max) within project limits
    - 30’-0” of full depth mainline replacement at terminal joints
    - Begin to End Incidental limits = 2,017 ft
    - Begin to End Project limits = 1,747 ft
  - Bridge Replacement
    - Single span @ 73’-0” (c-c bent), Skew 10° Rt.
    - Rolled Weathering Steel Beams
    - **Accelerated Bridge Construction (ABC)!**

- Proposed Accelerated Bridge Construction (ABC)
  - Part of FHWA Every Day Counts (EDC) initiative
    - https://www.fhwa.dot.gov/innovation/everydaycounts/
    - Selected bridge type: Prefabricated Bridge Elements and Systems (PBES) and Ultra-High Performance Concrete (UHPC)



- US 33 over Blue River
  - PBES – Anticipated prefabricated elements
    - Superstructure
      - Steel beams with precast sections of bridge deck & railings (optional)
    - Substructure
      - End bent caps (semi-integral) and wingwalls
    - Reinforced Concrete Approach Slabs
    - Terminal Joints
  - SUMMARY – Everything concrete was precast!

- US 33 over Blue River
  - PBES – Where could they be fabricated?
    - Option #1 – Northwest field using temporary R/W



- US 33 over Blue River
  - PBES – Where could they be fabricated?
    - Option #2 – Separate off-site facility
      - INDOT will need access and notification for inspection purposes!
        - **Designers* - make sure this is in the contract specifications*
      - Consider shipping size, weight, etc.

- Accelerated Bridge Construction (ABC)
  - What is UHPC?
    - Typically consists of a combination of Portland cement, fine sane, silica fume, high-range water-reducing admixture, fibers (usually steel – BUY AMERICA!), and water.
    - Tensile strengths of up to 5.0 ksi and compressive strengths of up to 30 ksi can be achieved!!
      - Fully developed rebar lap lengths of ±6 inches
      - f`c,min,4-day on US 33 project = 14,389 psi
      - f`c,min,final on US 33 project = 20,418 psi
    - Thixotropic – time-dependent shear thinning property, i.e. it's still and sticky until you agitate it and then it flows

- Accelerated Bridge Construction (ABC) - UHPC


Figure 1. Commonly used steel fiber reinforcement.



- Accelerated Bridge Construction (ABC) - UHPC

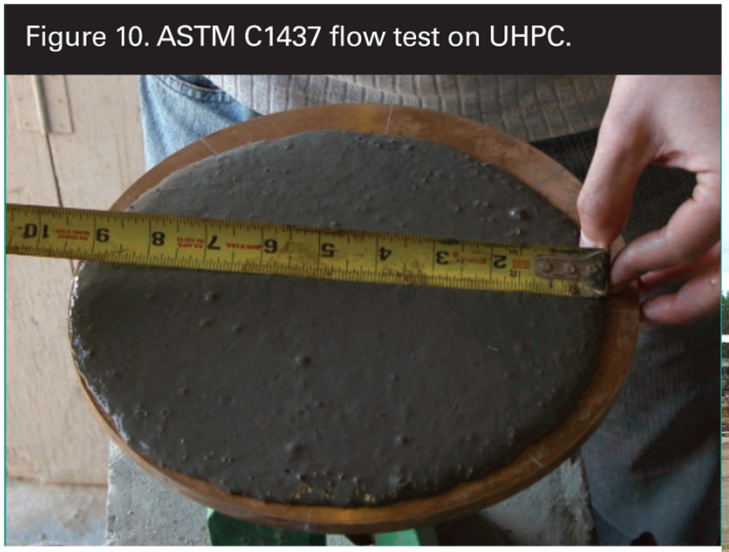
Figure 10. ASTM C1437 flow test on UHPC.



- Accelerated Bridge Construction (ABC) - UHPC

Figure 11. Exposed aggregate surface finish on a precast concrete component.

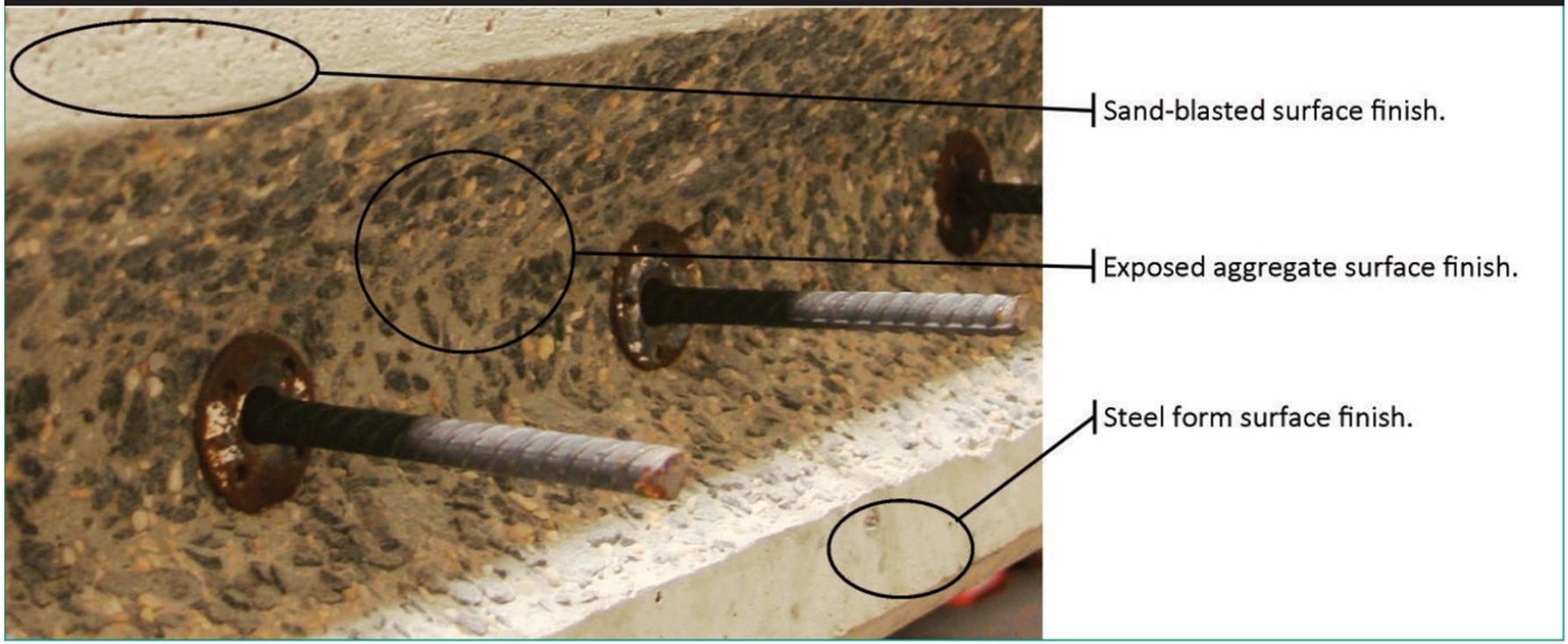

- Accelerated Bridge Construction (ABC) - UHPC

Figure 13. Portable concrete pan mixer preparing UHPC for placement during the construction of the field-cast connections.





- Accelerated Bridge Construction (ABC) - UHPC



© New York State Department of Transportation



- Accelerated Bridge Construction (ABC) – Example

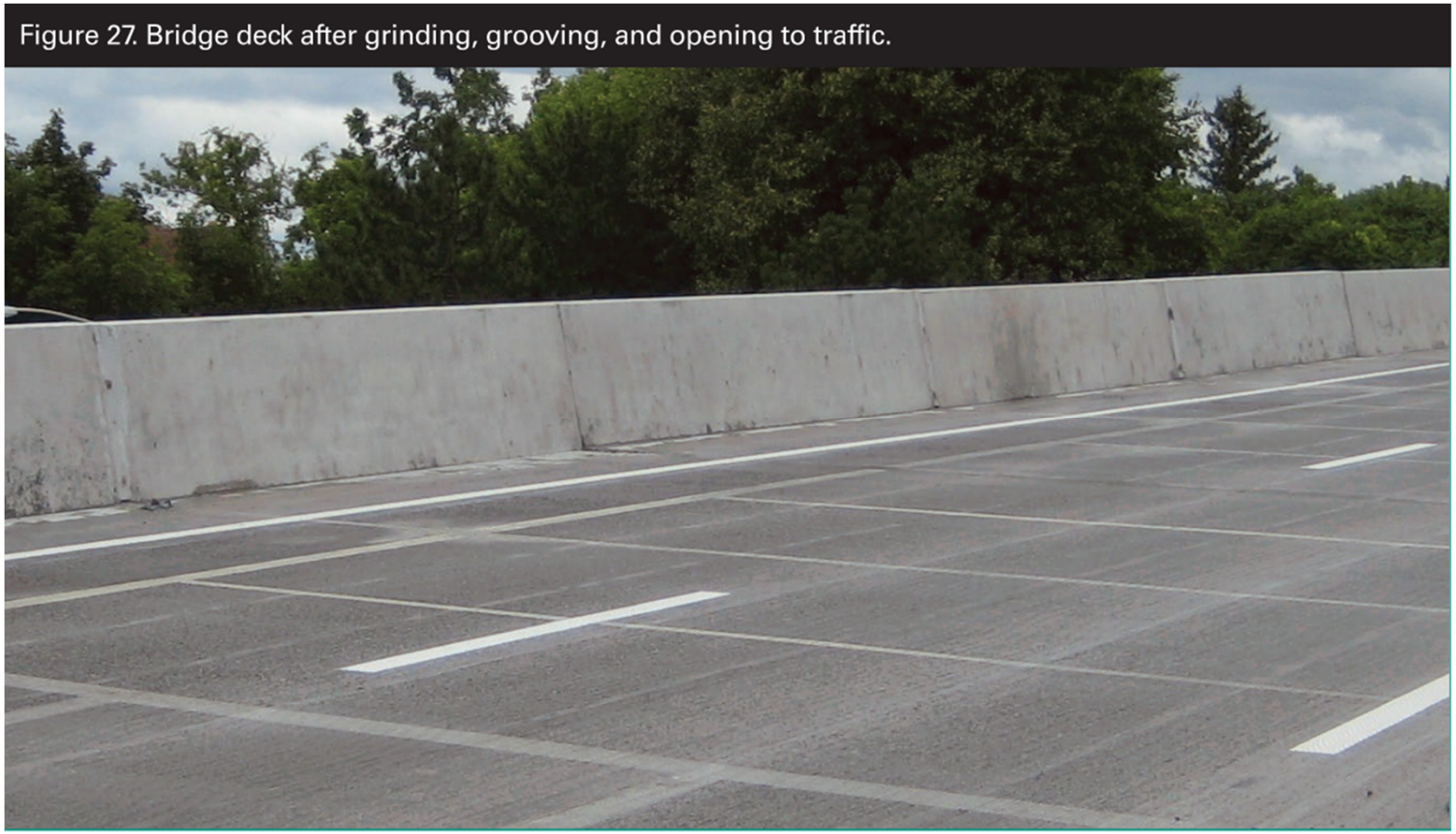

- Accelerated Bridge Construction (ABC) – US 33



- Accelerated Bridge Construction (ABC) – US 33



- Accelerated Bridge Construction (ABC) – US 33



- Accelerated Bridge Construction (ABC) – UHPC
  - US 33 Test Pour


UNDER CHUTE

- US 33 over Blue River - Bridge Typical Section

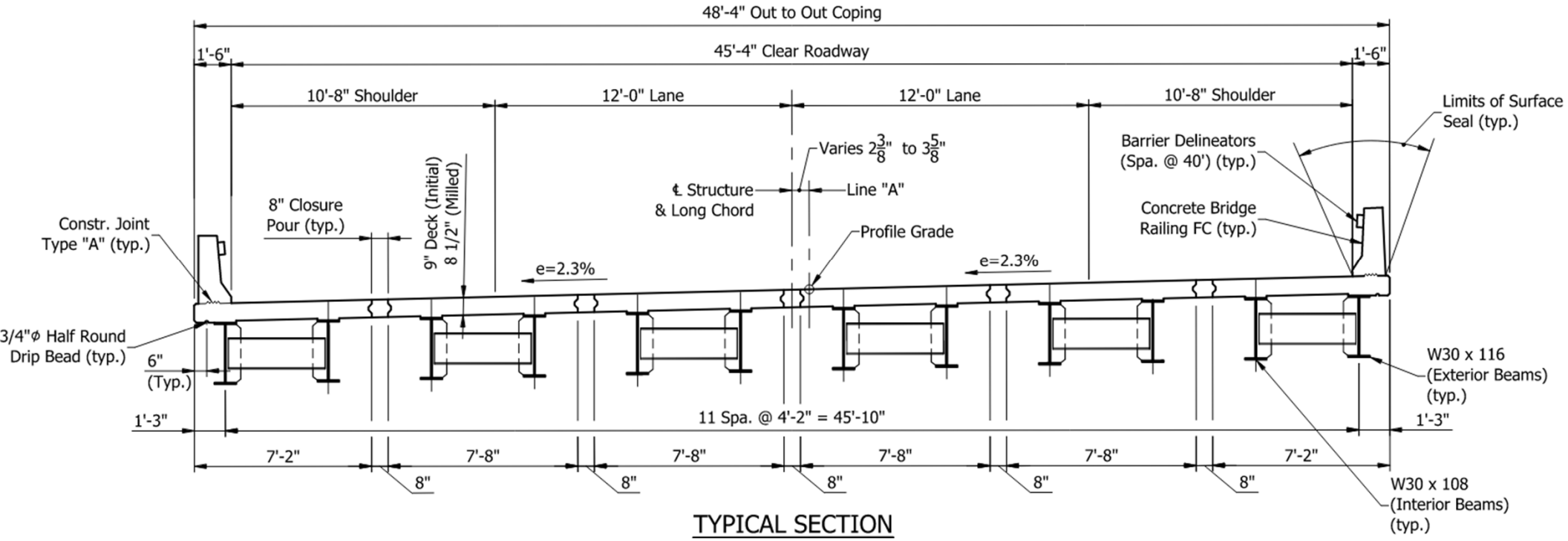

TYPICAL SECTION

- US 33 over Blue River - Bridge Plan

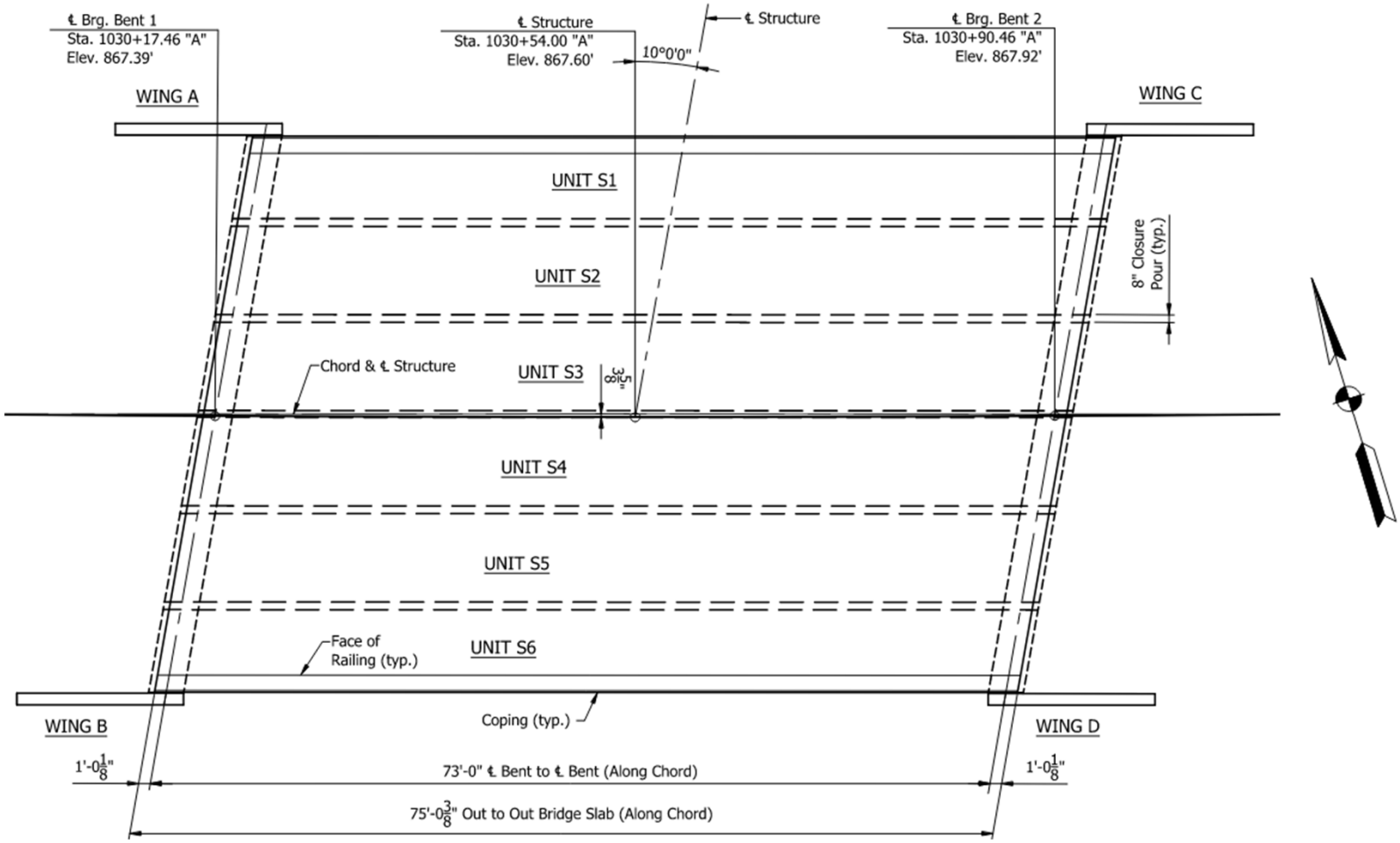

- US 33 over Blue River
  - Expected Bridge Construction Sequence
    - After existing bridge removal and spill slope grading, etc., drive SEC 14” x 0.250” piles - **Pile Template required!**



- US 33 over Blue River
  - Expected Bridge Construction Sequence
    - After initial drive and restrike, pour interior concrete and place embedded threaded anchor rods (#5 below)

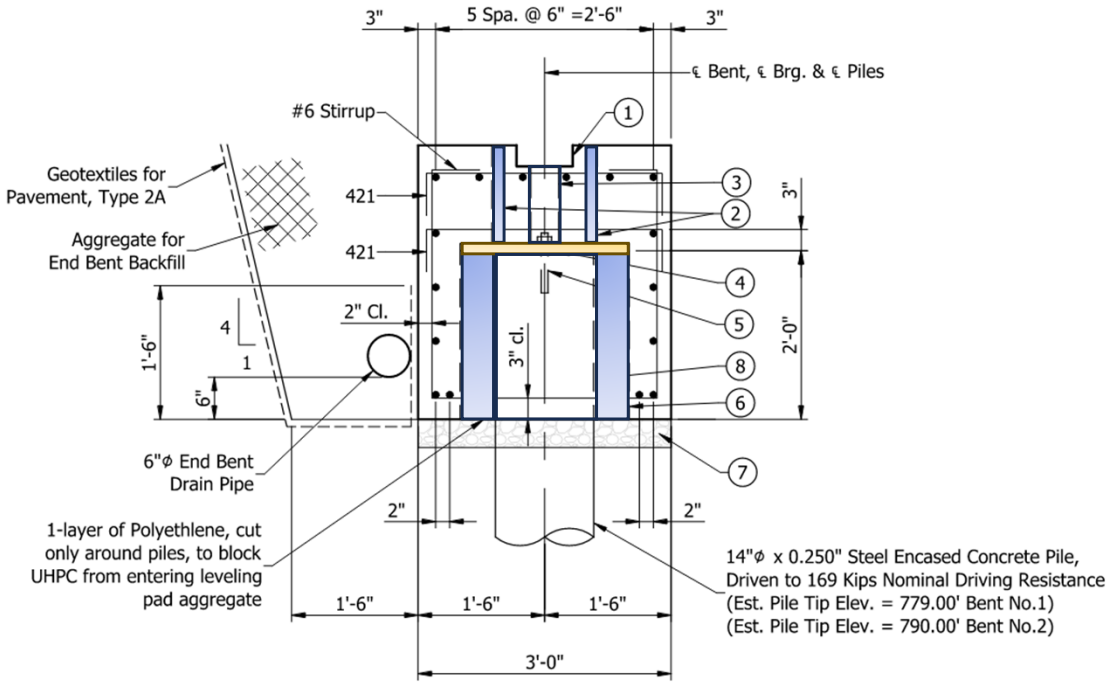

- US 33 over Blue River
  - Expected Bridge Construction Sequence
    - Place prefabricated end bent caps and wingwalls
    - Connect end bent caps to threaded anchor bolts
    - Pour UHPC in joints connecting substructure elements

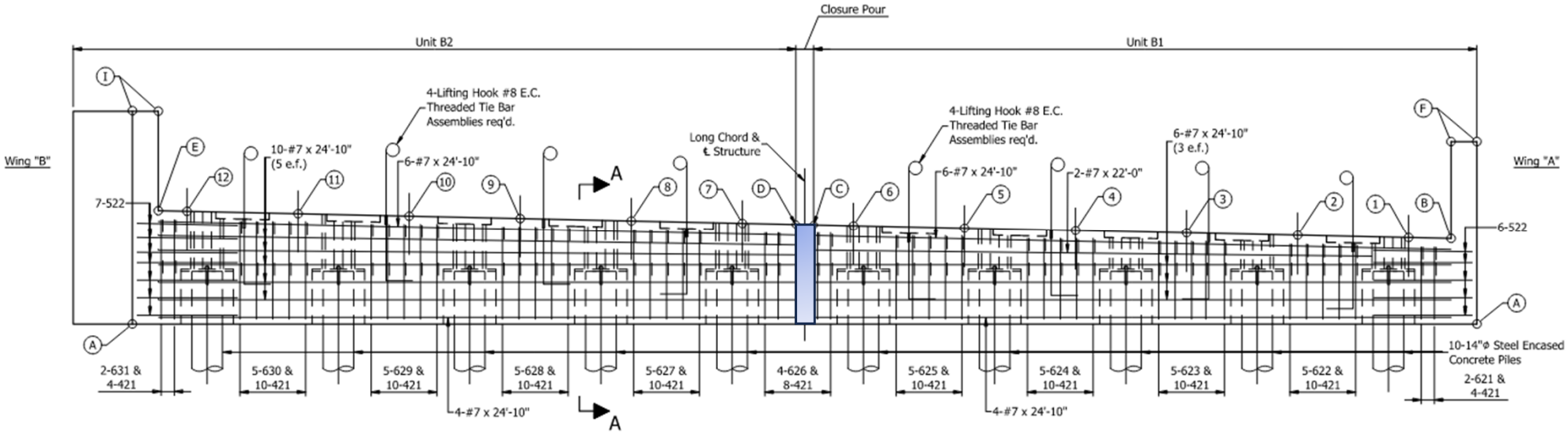

BENT NO. 1 ELEVATION

- US 33 over Blue River
  - Expected Bridge Construction Sequence
    - Place prefabricated end bent caps and wingwalls
    - Pour UHPC in joints connecting substructure elements

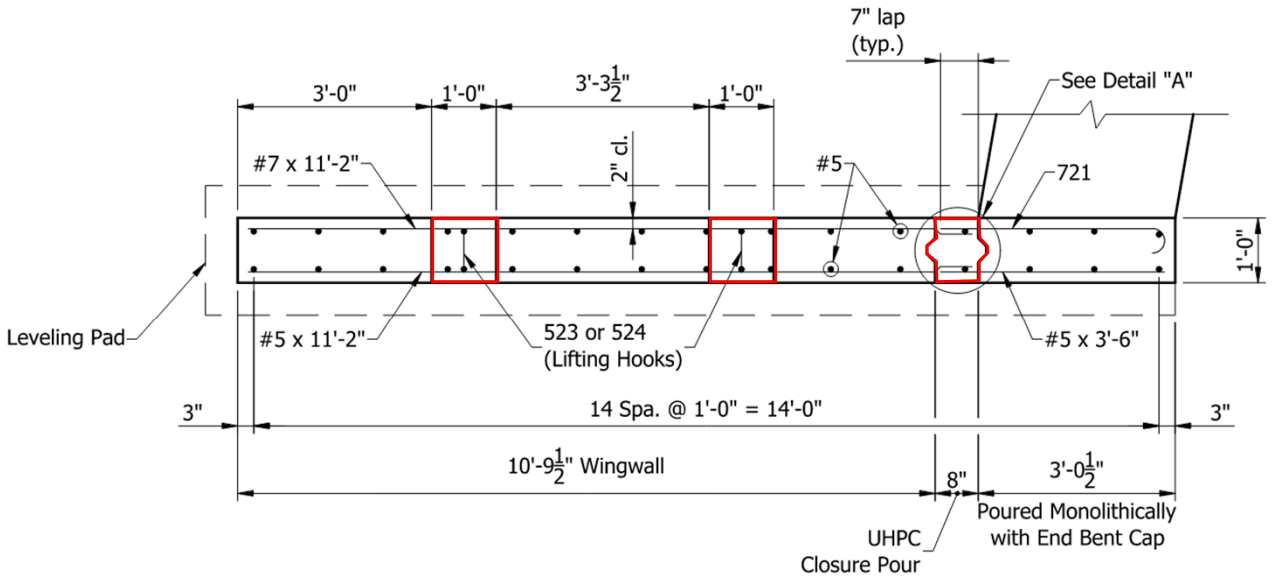

WINGWALL CONNECTION DETAIL

- US 33 over Blue River
  - Expected Bridge Construction Sequence
    - Prep and adjust seats as necessary for superstructure placement
    - Finish riprap slope protection

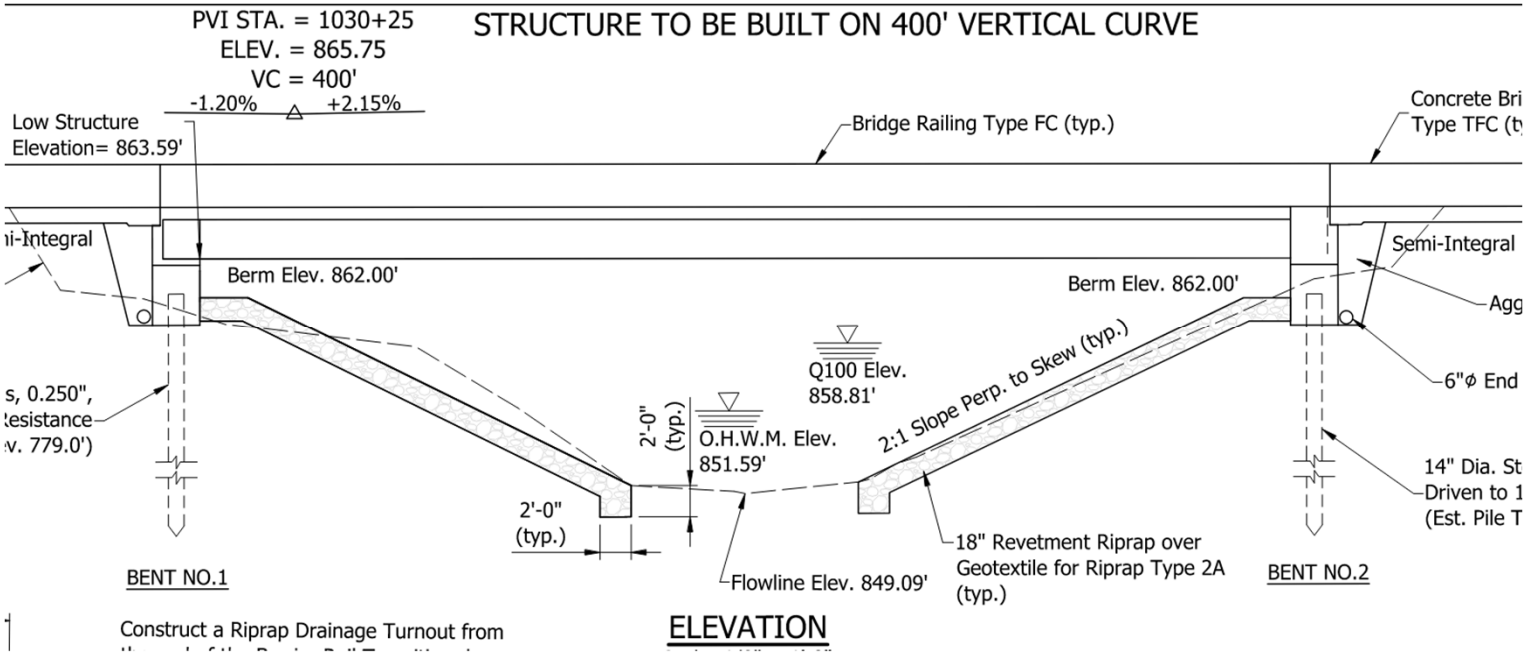

- US 33 over Blue River
  - Expected Bridge Construction Sequence
    - Set steel beam and precast desk modular units
    - Form and pour UHPC closure pours

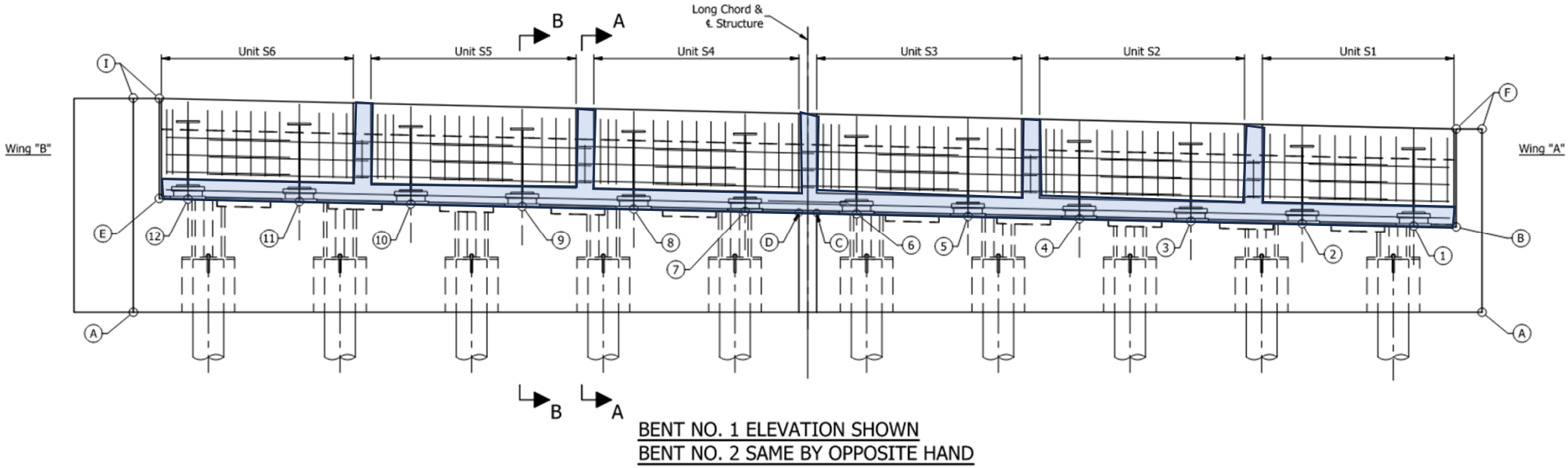

- US 33 over Blue River
  - Expected Bridge Construction Sequence
    - Aggregate for end bent backfill and subbase for PCCP
    - Set precast approach slab and terminal joint units

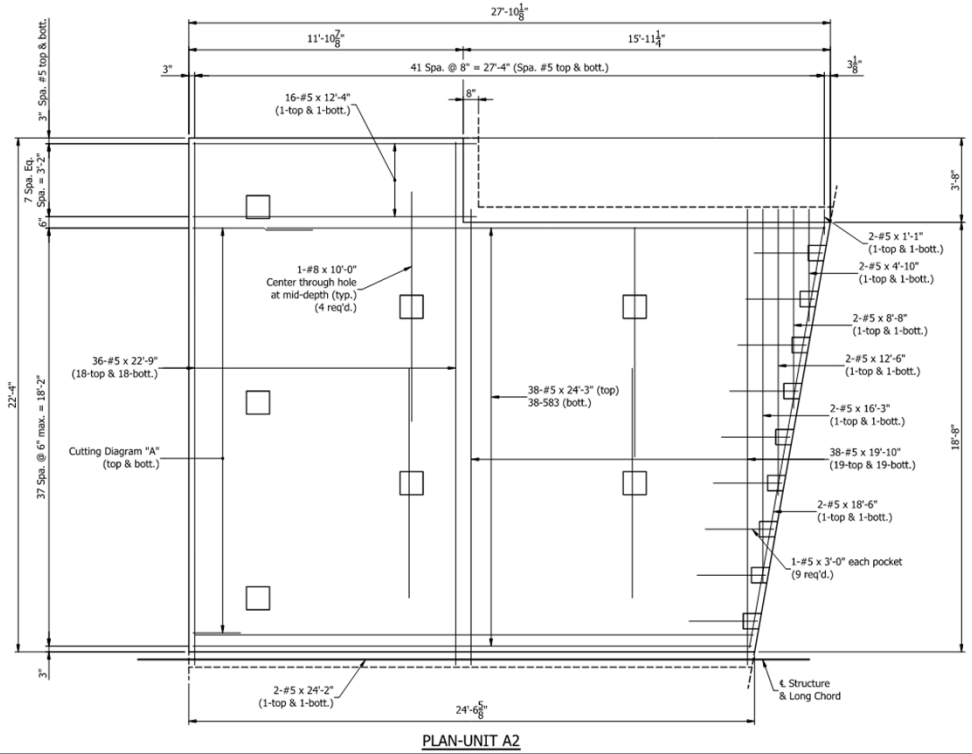

PLAN-UNIT A2

- US 33 over Blue River
  - Expected Bridge Construction Sequence
    - Pour UHPC closure pours and lift pockets
    - Grind approach slabs and bridge deck to final desired cross slope and elevations



- US 33 over Blue River - Utilities
  - Ensure proposed staging area, construction sequence, and MOT are accounted for in ALL work plans
  - Double check time set against utility work plan durations for relocation

- US 33 over Blue River
  - Utilities – Frontier

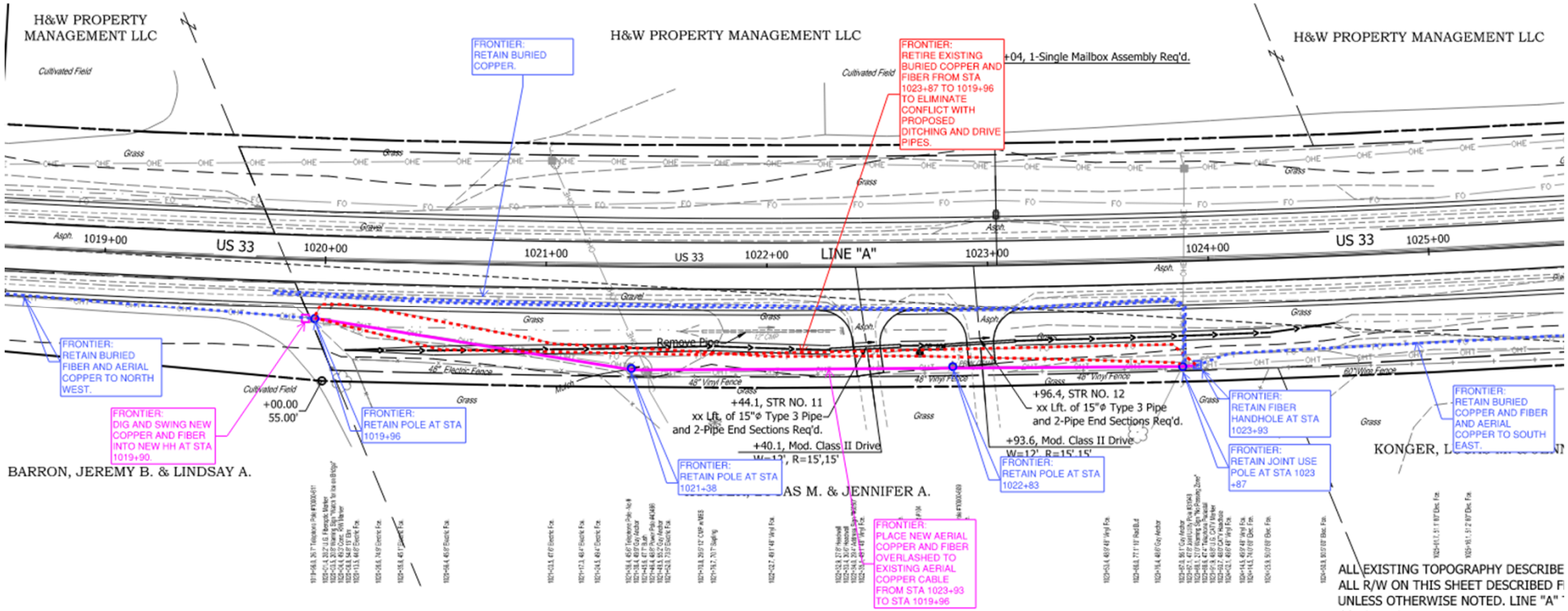

- US 33 over Blue River
  - Utilities – NIPSCO Gas

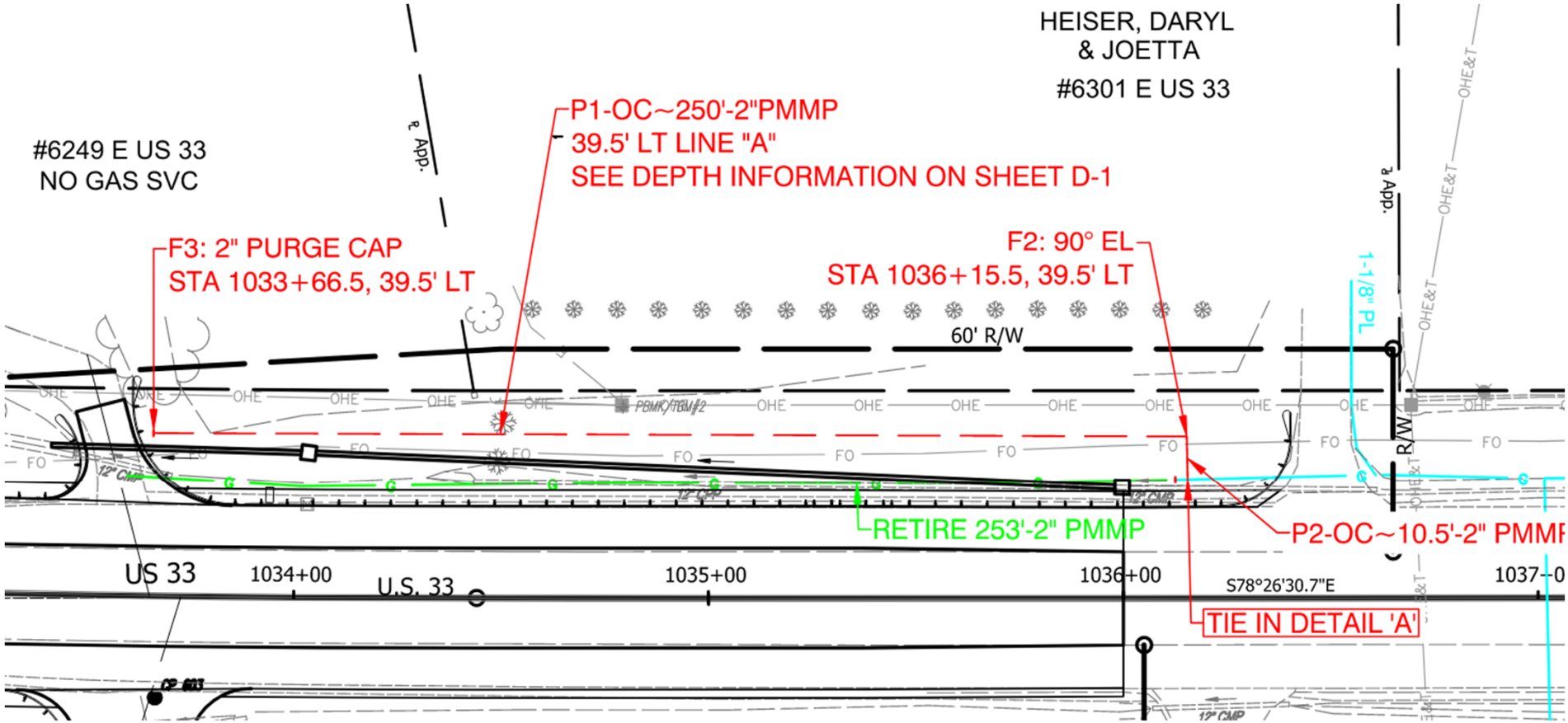

- US 33 over Blue River
  - Utilities – Northeastern REMC

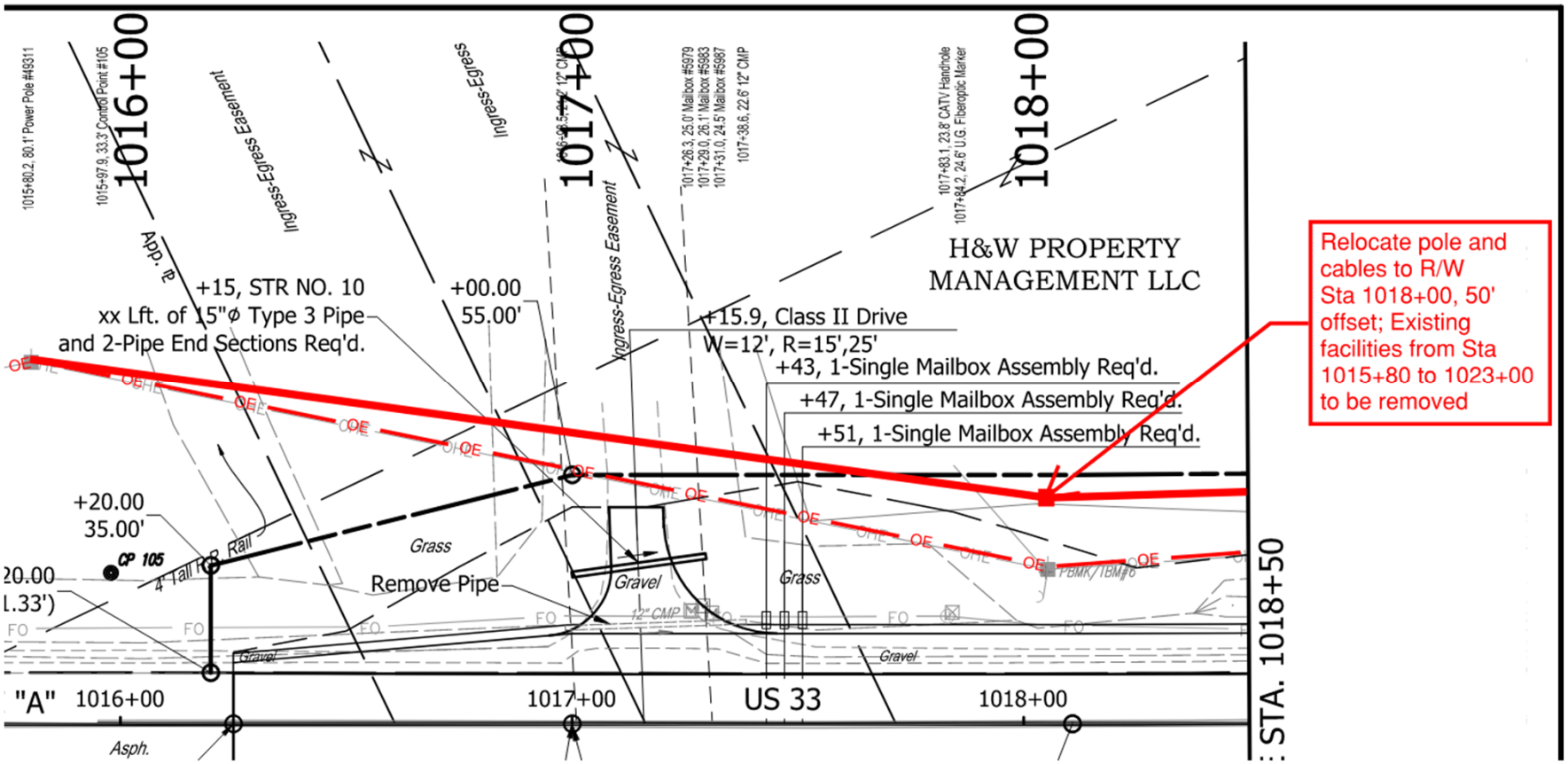

US 33 over Blue River, DES No. 1600470, Contract No. B-41127
2024 INDOT Bridge Design Conference

- US 33 over Blue River
  - Utilities – Northeastern REMC

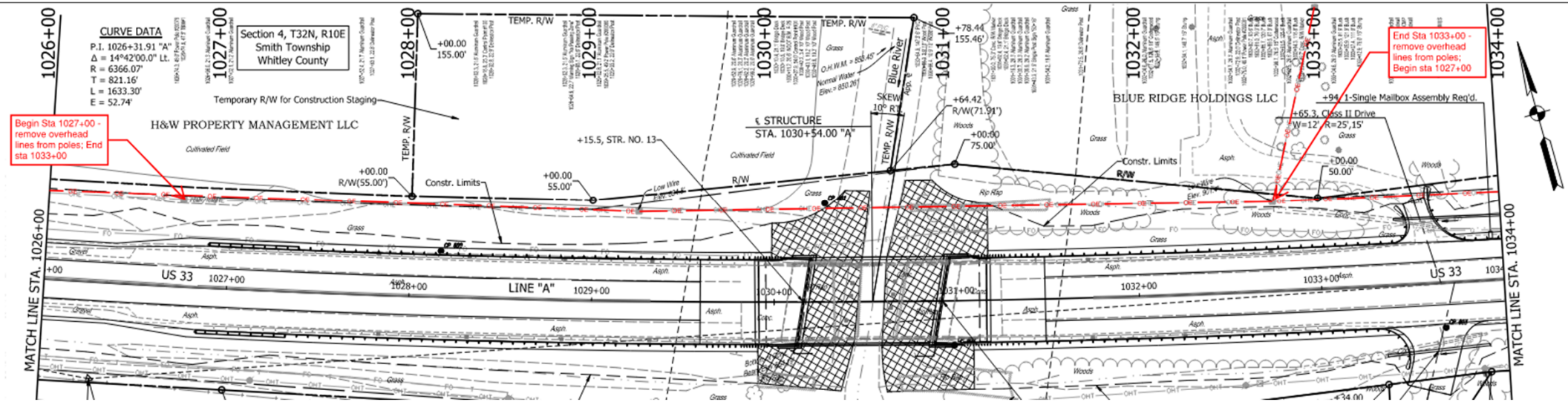

- US 33 over Blue River
  - Utilities – US Signal

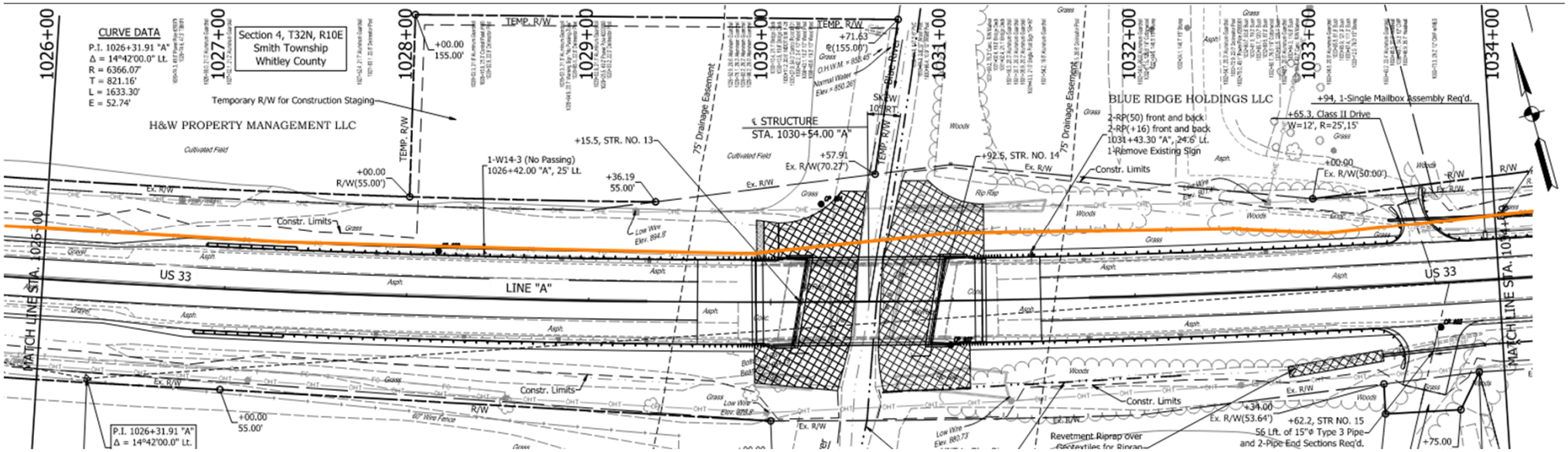

- US 33 over Blue River – Right-of-Way
  - If adjacent staging area intended, ensure sufficient temporary R/W is acquired. US 33 contractor desired more than what was provided.

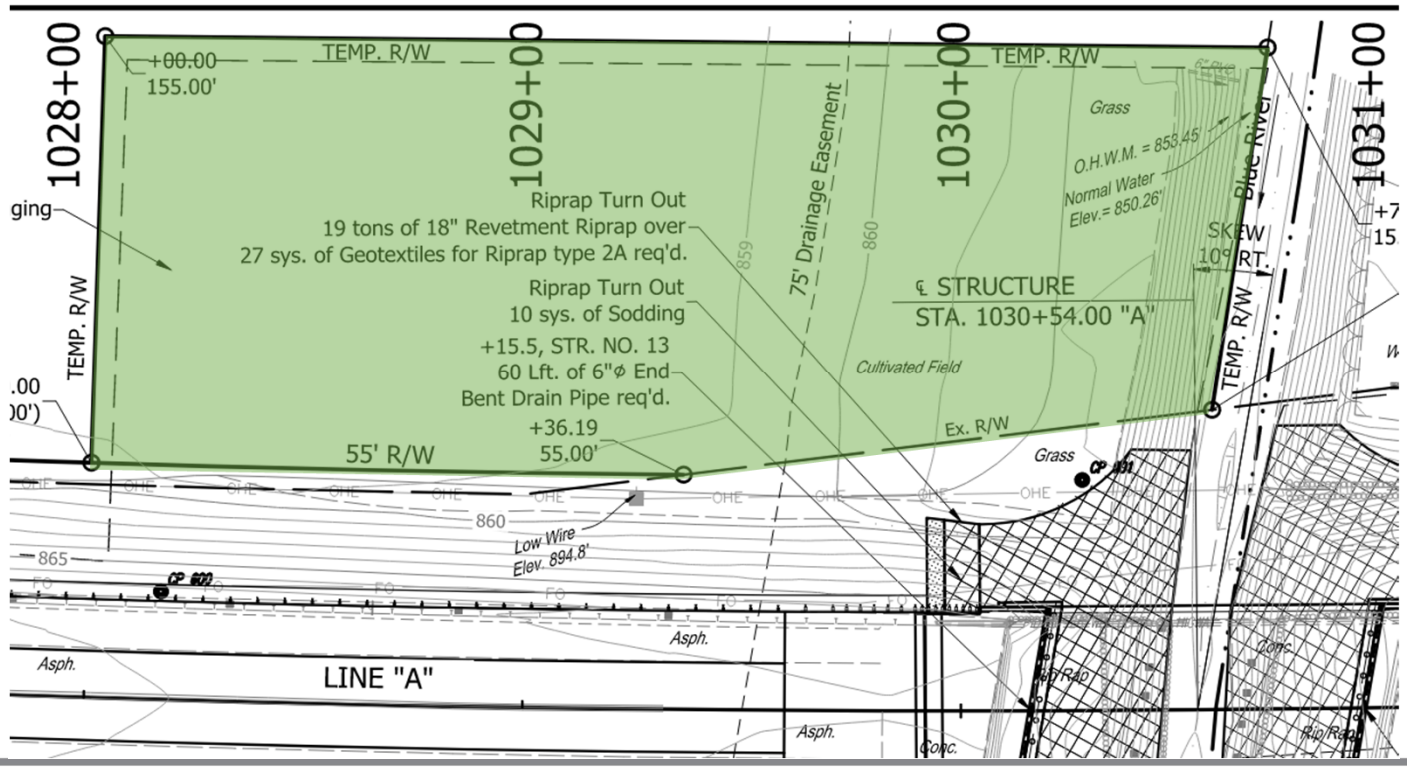

- US 33 over Blue River - Permits
  - Ensure permit applications account for likely temporary causeways, etc. required for prefabricated component installation.

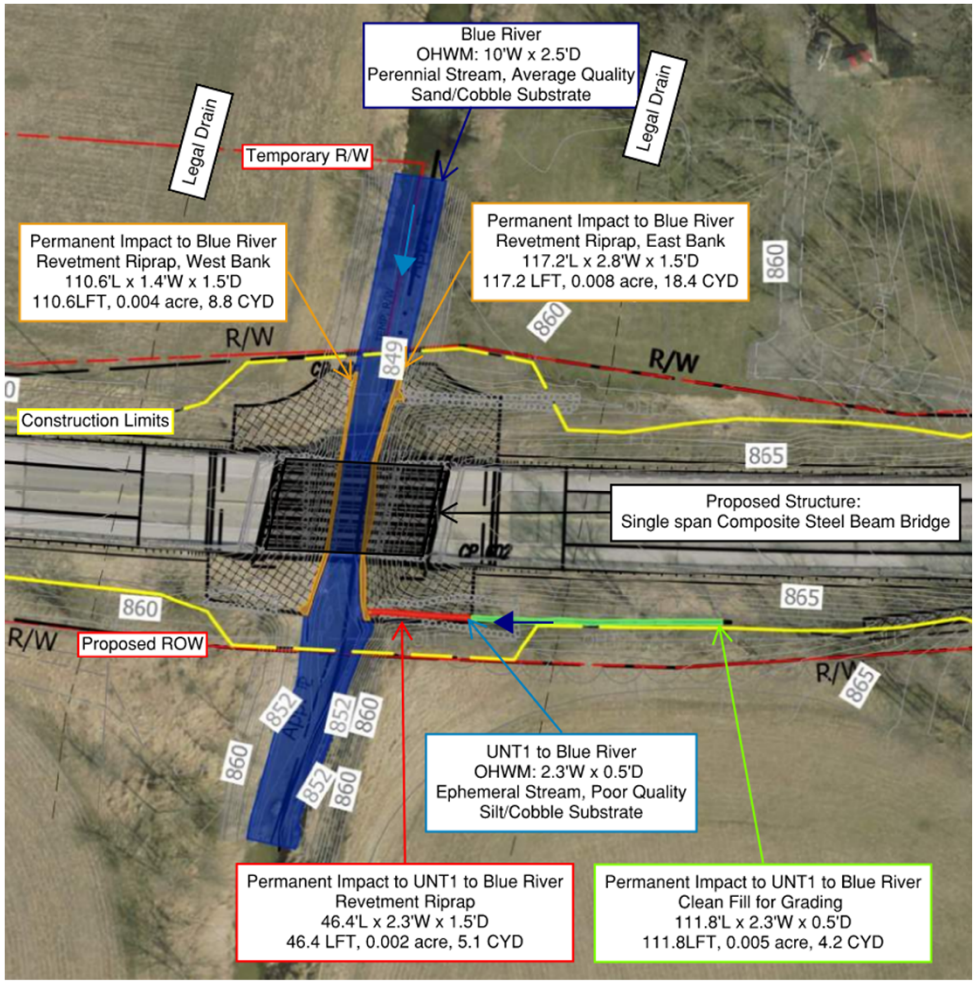

- Pre-Bid Meeting
  - HAVE ONE!
  - Stress project scope, key provisions, and level of routine communication required for successful outcome.
  - US 33 Pre-Bid meeting held on November 17, 2024 at INDOT Ft Wayne District

- LETTING
  - If successful, go celebrate! Seriously, you earned it.

- Pre-Con Meeting
  - Requested changes for US 33 over Blue River
    - Additional longitudinal joints in RCBAs – smaller lifts
    - Slip form FC bridge railing instead of precast
  - Requested changes for future ABC projects
    - More time between Letting and Construction for contractor to design prefabricated elements and procure lifting devices, etc.
    - More temporary right-of-way

- Post-Letting Coordination Meeting
  - Attendees: INDOT, EOR, Contractor, Contractor's Engineer
  - Schedules
    - Construction timeline
    - Coordination meeting frequency
  - Confirm UHPC supplier & pour schedule
  - Prefabrication manufacturer and location
  - Proposed design changes

- US 33 over Blue River – Proposed Design Changes
  - Embedded end bent load plate
  - Blockouts for bearings extended to front of cap
  - Bearing pads only vulcanized to top load plate
  - Bridge railing to be slip formed
  - RCBA connection to be full width with keyway added
  - Smaller sections of RCBA

- US 33 over Blue River – Proposed Design Changes
  - Embedded end bent load plate

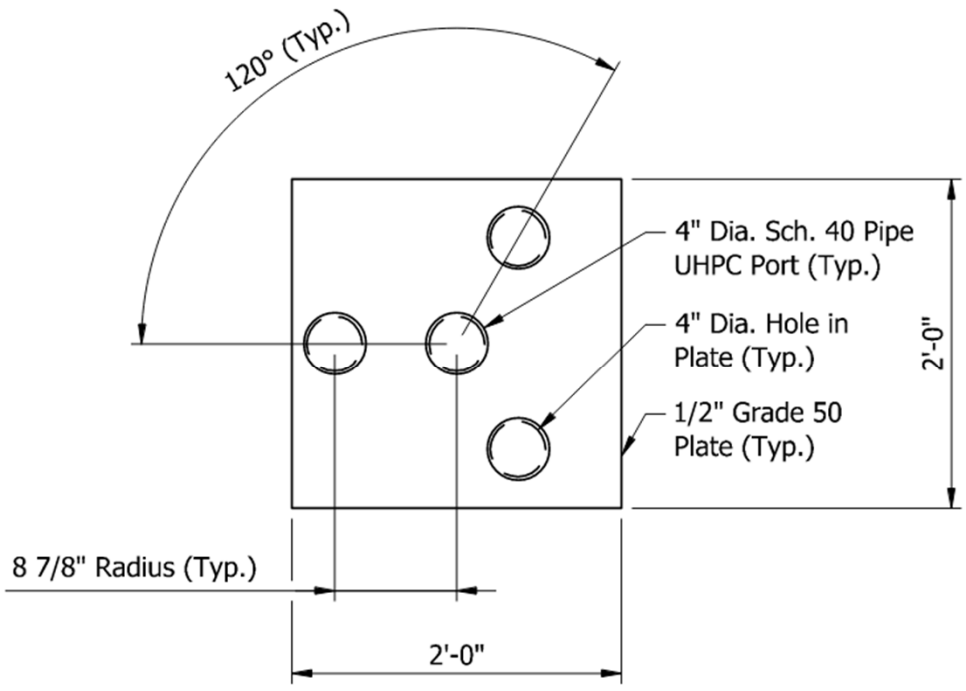

PLAN

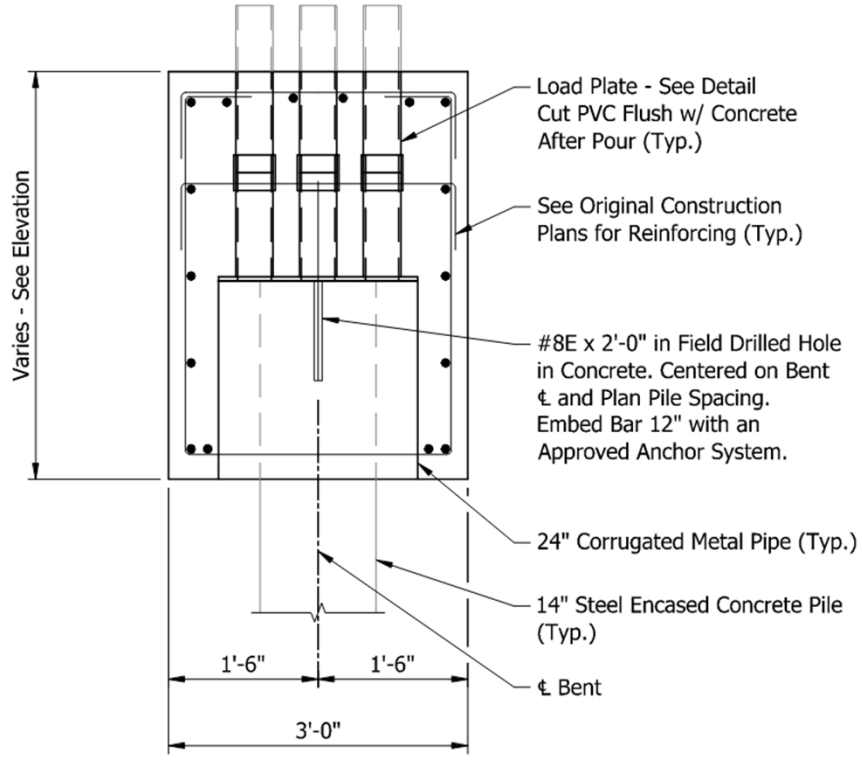

BENT SECTION AT PILE

- US 33 over Blue River – Proposed Design Changes
  - Reinforced Concrete Bridge Approach Slabs

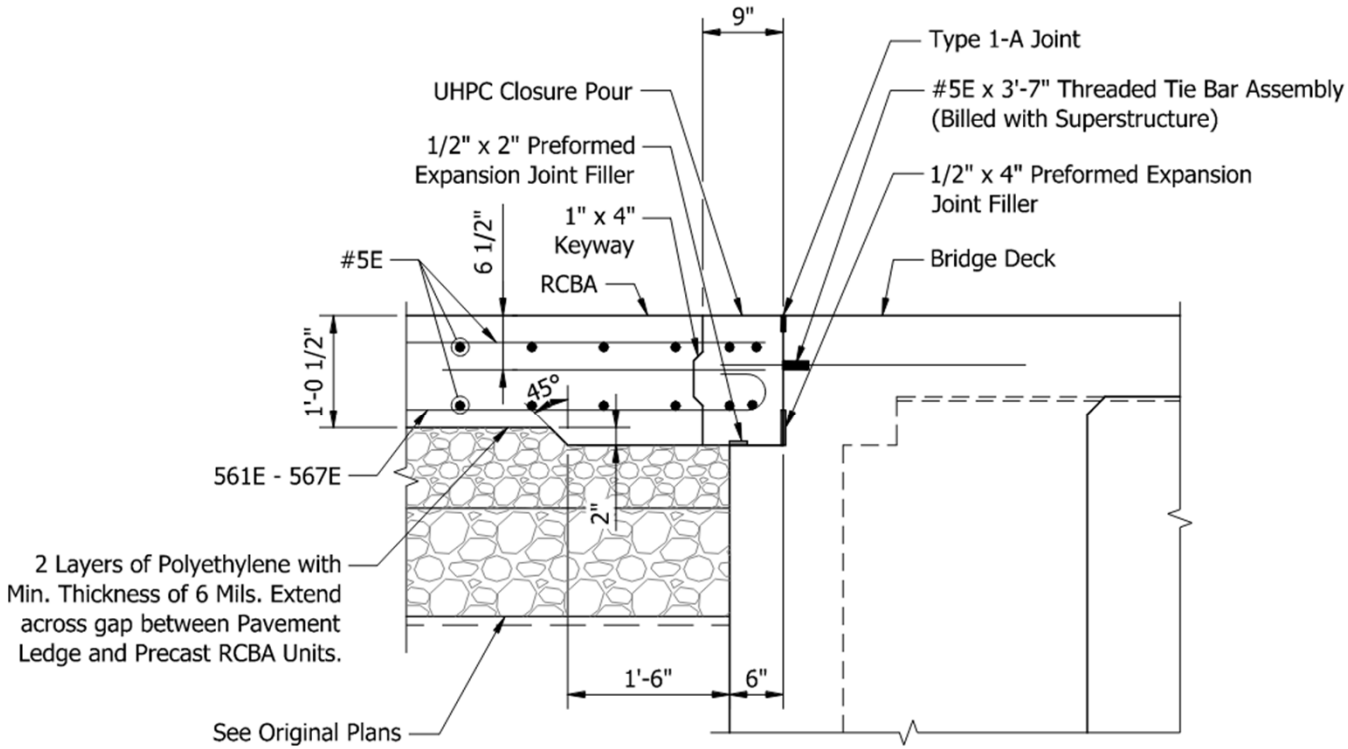

PAVEMENT LEDGE DETAIL

- US 33 over Blue River – Construction



- US 33 over Blue River – Construction



- US 33 over Blue River – Construction



- US 33 over Blue River – Construction



- US 33 over Blue River – Construction



- US 33 over Blue River – Construction



- US 33 over Blue River – Construction



- US 33 over Blue River – Construction



- US 33 over Blue River – Construction



- US 33 over Blue River – Construction



- US 33 over Blue River – Construction



- US 33 over Blue River – Construction



- US 33 over Blue River – Construction



- US 33 over Blue River – Construction



- US 33 over Blue River – Construction



- US 33 over Blue River – Construction



- US 33 over Blue River – Construction



- US 33 over Blue River – Construction



- US 33 over Blue River – Construction



- US 33 over Blue River – Construction



- US 33 over Blue River – Construction



- US 33 over Blue River – Construction



- US 33 over Blue River – Construction



- US 33 over Blue River – Construction



- US 33 over Blue River – Construction



- US 33 over Blue River – Construction



- US 33 over Blue River – Construction



- US 33 over Blue River – Lessons Learned
  - Most of time savings came from superstructure prefabrication – great methodology for superstructure replacements!
  - Needed additional cored holes and 9-bag INDOT grout instead of flowable fill under RCBAs to ensure adequate bearing of RCBA on subbase for PCCP
  - Include details and provisions to shim precast RCBA due to sleeper slabs being set off grade
  - Estimated time savings for precasting RCBAs was only 1 to 2 days
  - Suggested to use steps instead of sloping bent caps

- US 33 over Blue River – Lessons Learned
  - Let project in early fall for following spring construction, i.e. give more time for contractor design and material procurement
    - Lifting device availability was an issue
  - If temp R/W provided, make area larger
  - Use ASTM C39, as modified by C1856, for UHPC testing
  - Be specific with requirements of pullout testing for each bar size to be tested
    - Both #5 and #7 rebar tests yielded steel before UHPC cracking
  - RCBA joints – use straight rebar extensions instead of 180 hook 591 bars

- US 33 over Blue River – Lessons Learned
  - UHPC joint keyways – changed to triangle shape per FHWA example instead of trapezoid shown on plans
  - Carefully detail every bar in each UHPC joint. Make sure pieces can be lowered into position without conflict.
  - Design precast caps for contingency where an individual pile is misdriven or cannot achieve capacity
  - Do not vibrate UHPC; steel fibers will fall to bottom
  - Move end bent cap bottom rebar to corners to avoid CMP and then move back to center, but staggered, in UHPC joints

- US 33 over Blue River – Lessons Learned
  - UHPC schedule was critical path
    - USP required manufacturer's representative be present for every pour. Few suppliers, so availability is limited.
    - Contractor could have employee get certified to then not rely on manufacturer for schedule, but adds risk to contractor
  - Expect bearing shims to be required due to prefabricated caps and elevations differing from plans
  - Work with INDOT to consider increasing contract allowance for Mob/Demob > 5% due to prefabrication

- Questions?



- THANK YOU!!
- This project was a success because of key contributions from the following people. **Thank you!** This was a special team effort!
  - INDOT - Jeremy Hunter, Stephanie Wagner, Pete White, Mahmoud Hailat, Damien Perry, John Langmaid, Susan Doell, Keith Lytton, Brad Taylor, and Alex Hernandez
  - RL McCoy – Mark McCoy, Dan McCoy, John Deathe, & Joe Mueller
  - ERI – Kurt Heidenreich, Troy Larkins, & Aaron Isch
  - USI – Brandon Arnold, John Handke, & Brett Charnstrom