STATE OF INDIANA
DEPARTMENT OF ENVIRONMENTAL MANAGEMENT
PUBLIC NOTICE NO. 20230314– IN0020427 – D
DATE OF NOTICE: MARCH 14, 2023
DATE RESPONSE DUE: APRIL 13, 2023

The Office of Water Quality proposes the following NPDES DRAFT PERMIT:

MAJOR - RENEWAL

BREMEN (TOWN) WWTP, Permit No. IN0020427, MARSHALL COUNTY, 561 N. Keyser St., Bremen, IN. This Major Municipal facility discharges 1.5 million gallons daily of sanitary, industrial, and combined sewer wastewater into the Yellow River via Outfall 001, located at GPS coordinates 41° 27' 10" N, 86°10' 28" W. Final sludge is hauled off-site and landfilled. Permit Manager: Nicholas Eilerman, 317/232-8619. neilerma@idem.in.gov. Posted online at https://www.in.gov/idem/public-notices/

PROCEDURES TO FILE A RESPONSE

Draft can be viewed or copied (10¢ per page) at IDEM/OWQ NPDES PS, 100 North Senate Avenue, (Rm 1203) Indianapolis, IN, 46204 (east end elevators) from 9 – 4, Mon - Fri, (except state holidays). A copy of the Draft Permit is on file at the local County Health Department. Please tell others you think would be interested in this matter. For your rights & responsibilities see these sites: Public Notices: https://www.in.gov/idem/public-notices/;
Citizen Guide: https://www.in.gov/idem/resources/citizens-guide-to-idem/. Please tell others whom you think would be interested in this matter.

Response Comments: The proposed decision to issue a permit is tentative. Interested persons are invited to submit written comments on the Draft permit. All comments must be postmarked no later than the Response Date noted to be considered in the decision to issue a Final permit. Deliver or mail all requests or comments to the attention of the Permit Writer at the above address, (mail code 65-42 PS).

To Request a Public Hearing:
Any person may request a Public Hearing. A written request must be submitted to the above address on or before the Response Date noted. The written request shall include: the name and address of the person making the request, the interest of the person making the request, persons represented by the person making the request, the reason for the request and the issues proposed for consideration at the Hearing. IDEM will determine whether to hold a Public Hearing based on the comments and the rationale for the request. Public Notice of such a Hearing will be published in at least one newspaper in the geographical area of the discharge and sent to anyone submitting written comments and/or making such request and whose name is on the mailing list at least 30 days prior to the Hearing.

INDIANA DEPARTMENT OF ENVIRONMENTAL MANAGEMENT
We Protect Hoosiers and Our Environment.
100 N. Senate Avenue • Indianapolis, IN 46204
(800) 451-6027 • (317) 232-8603 • www.idem.IN.gov

Eric J. Holcomb
Governor

Brian C. Rockensuess
Commissioner

March 14, 2023

VIA ELECTRONIC MAIL

Michael Leman, President
Town Council of Bremen
111 South Center St.
Bremen, IN 46506

Dear Mr. Leman:

Re: Draft NPDES Permit No. IN0020427
Town of Bremen Wastewater Treatment Plant
Marshall County

Your application and supporting documents have been reviewed and processed in accordance with rules adopted under 327 IAC 5. Enclosed is draft NPDES Permit No. IN0020427 which applies to the discharge from the Town of Bremen Wastewater Treatment Plant.

Pursuant to IC 13-15-5-1, IDEM will publish the draft permit document online at https://www.in.gov/idem/public-notices/. Additional information on public participation can be found in the "Citizens' Guide to IDEM", available at https://www.in.gov/idem/resources/citizens-guide-to-idem/. A 30-day comment period is available to solicit input from interested parties, including the general public.

Please review this document carefully and become familiar with the proposed terms and conditions. Comments concerning the draft permit should be submitted in accordance with the procedure outlined in the enclosed public notice form. Questions concerning this draft permit may be addressed to Nicholas Eilerman at 317/232-8619 or neilerma@idem.IN.gov.

Sincerely,

Leigh Voss

Leigh Voss, Chief
Municipal NPDES Permits Section
Office of Water Quality

Enclosures
cc: Matt Cunningham, Certified Operator

STATE OF INDIANA

DEPARTMENT OF ENVIRONMENTAL MANAGEMENT

AUTHORIZATION TO DISCHARGE UNDER THE

NATIONAL POLLUTANT DISCHARGE ELIMINATION SYSTEM

In compliance with the provisions of the Federal Water Pollution Control Act, as amended, (33 U.S.C. 1251 et seq., the "Clean Water Act") or (CWA), and IDEMs authority under IC 13-5, the Indiana Department of Environmental Management (IDEM) is issuing this permit to the

TOWN OF BREMEN

hereinafter referred to as "the permittee." The permittee owns and/or operates the **Town of Bremen Wastewater Treatment Plant**, a major municipal wastewater treatment plant located at 561 N. Keyser Street, Bremen, Indiana, Marshall County. The permittee is hereby authorized to discharge from the outfalls identified in Part I of this permit to receiving waters named Yellow River to Kankakee River in accordance with the effluent limitations, monitoring requirements, and other conditions set forth in the permit. The collection system still contains a low percentage of combined sewers, but overflow events have been effectively eliminated. IDEM does not consider Bremen to have any active CSO outfalls. Discharges from any portion of the POTW, other than the WWTP outfall (001) are prohibited at all times. This permit may be revoked for the nonpayment of applicable fees in accordance with IC 13-18-20.

Effective Date: _____.

Expiration Date: _____.

In order to receive authorization to discharge beyond the date of expiration, the permittee shall submit such information and application forms as are required by the Indiana Department of Environmental Management. The application shall be submitted to IDEM at least 180 days prior to the expiration date of this permit, unless a later date is allowed by the Commissioner in accordance with 327 IAC 5-3-2 and Part II.A.4 of this permit.

Issued on _____, for the Indiana Department of Environmental Management.

Jerry Dittmer, Chief
Permits Branch
Office of Water Quality

TREATMENT FACILITY DESCRIPTION

The permittee currently operates a Class III, 1.5 MGD treatment facility consisting of a fine screen, grit removal, an influent flow meter, three (3) primary settling tanks, two (2) biological oxidation towers, two (2) secondary clarifiers, a rock bed trickling filter for ammonia oxidation, a final clarifier, four (4) tertiary sand filters to enhance solids and phosphorus removal, chlorination/dechlorination facilities, a post-aeration tank, and an effluent flow meter. Sludge is treated by an aerobic digester followed by a sludge drying bed. Final sludge is hauled off-site and landfilled.

The collection system is comprised of combined sanitary and storm sewers with no currently active Combined Sewer Overflow (CSO) locations. Attachment A of this permit prohibits any discharges from the combined sanitary and storm sewer system outside of the main treatment plant Outfall 001.

The mass limits for $CBOD_5$, TSS and ammonia-nitrogen have been calculated utilizing the peak design flow of 2.5 MGD. This is to facilitate the maximization of flow through the treatment facility in accordance with this Office's CSO policy.

PART I

A. EFFLUENT LIMITATIONS AND MONITORING REQUIREMENTS

The permittee is authorized to discharge from the outfall listed below in accordance with the terms and conditions of this permit. The permittee shall take samples and measurements at a location representative of each discharge to determine whether the effluent limitations have been met. Refer to Part I.B of this permit for additional monitoring and reporting requirements.

1. Beginning on the effective date of this permit, the permittee is authorized to discharge from Outfall 001, which is located at Latitude: 41° 27' 10" N, Longitude: 86° 10' 28" W. The discharge is subject to the following requirements:

TABLE 1

	Quantity or Loading			Quality or Concentration			Monitoring Requirements	
Parameter	**Monthly Average**	**Weekly Average**	**Units**	**Monthly Average**	**Weekly Average**	**Units**	**Measurement Frequency**	**Sample Type**
Flow [1]	Report	----	MGD	----	----	----	5 X Weekly	24-Hr. Total
$CBOD_5$								
Summer [2]	209	313	lbs/day	10	15	mg/l	3 X Weekly	24-Hr. Comp.
Winter [3]	313	480	lbs/day	15	23	mg/l	3 X Weekly	24-Hr. Comp.
TSS								
Summer [2]	209	313	lbs/day	10	15	mg/l	3 X Weekly	24-Hr. Comp.
Winter [3]	626	939	lbs/day	30	45	mg/l	3 X Weekly	24-Hr. Comp.
Ammonia-nitrogen								
Summer [2]	65	98	lbs/day	3.1	4.7	mg/l	3 X Weekly	24-Hr. Comp.
Winter [3]	104	156	lbs/day	5.0	7.5	mg/l	3 X Weekly	24-Hr. Comp.
Total Phosphorus	Report	----	lbs/day	1.0	----	mg/l	3 X Weekly	24-Hr. Comp.
Nitrogen, Total (as N) [4]	Report	----	lbs/day	Report	----	mg/l	Monthly	24-Hr. Comp.

TABLE 2

	Quality or Concentration				Monitoring Requirements	
Parameter	**Daily Minimum**	**Monthly Average**	**Daily Maximum**	**Units**	**Measurement Frequency**	**Sample Type**
pH [5]	6.0	----	9.0	s.u.	5 X Weekly	Grab
Dissolved Oxygen [6]						
Summer [2]	7.0	----	----	mg/l	5 X Weekly	4 Grabs/24-Hrs.
Winter [3]	5.0	----	----	mg/l	5 X Weekly	4 Grabs/24-Hrs.
Total Residual Chlorine [7]						
Final effluent [8]	----	0.02	0.04	mg/l	5 X Weekly	Grab
E.coli [9]	----	125 [10]	235 [11]	cfu/100 ml	3 X Weekly	Grab

[1] Effluent flow measurement is required per 327 IAC 5-2-13. The flow meter(s) shall be calibrated at least once every twelve months.

[2] Summer limitations apply from May 1 through November 30 of each year.

[3] Winter limitations apply from December 1 through April 30 of each year.

[4] Total Nitrogen shall be determined by testing Total Kjeldahl Nitrogen (TKN) and Nitrate + Nitrite and reporting the sum of the TKN and Nitrate + Nitrite results (reported as N). Nitrate + Nitrite can be analyzed together or separately. Monitoring for Total Nitrogen is required in the effluent only.

The following EPA methods are recommended for use in the analysis of TKN and Nitrate + Nitrite. Alternative approved 40 CFR 136 methods may be utilized.

Parameter	Method
TKN	350.1, 351.1, 351.2
Nitrate	300.0, 300.1, 352.1
Nitrite	300.1, 353.2
Nitrate + Nitrite	300.0, 300.1, 353.2

[5] If the permittee collects more than one grab sample on a given day for pH, the values shall not be averaged for reporting daily maximums or daily minimums. The permittee must report the individual minimum and the individual maximum pH value of any sample during the month on the Monthly Report of Operation forms.

[6] The daily minimum concentration of dissolved oxygen in the effluent shall be reported as the arithmetic mean determined by summation of the four (4) daily grab sample results divided by the number of daily grab samples. These samples are to be collected over equal time intervals.

[7] The effluent shall be disinfected on a continuous basis such that violations of the applicable bacteriological limitations (*E. coli*) do not occur from April 1 through October 31, annually. If the permittee uses chlorine for any reason, at any time including the period from November 1 through March 31, then the limits and monitoring requirements in Table 2 for Total Residual Chlorine (TRC) shall be in effect whenever chlorine is used.

[8] In accordance with 327 IAC 5-2-11.1(f), compliance with this permit will be demonstrated if the measured effluent concentrations are less than the limit of quantitation (0.06 mg/l). If the measured effluent concentrations are above the water quality-based permit limitations and above the Limit of Detection (LOD) specified by the permit in any of three (3) consecutive analyses or any five (5) out of nine (9) analyses, the permittee is required to reevaluate its chlorination/dechlorination practices to make any necessary changes to assure compliance with the permit limitation for TRC. These records must be retained in accordance with the record retention requirements of Part I.B.8 of this permit.

Effluent concentrations greater than or equal to the LOD but less than the Limit of Quantitation (LOQ), shall be reported on the discharge monitoring report forms as the measured value. A note must be included with the DMR indicating that the value is not quantifiable. Effluent concentrations less than the limit of detection shall be reported on the discharge monitoring report forms as less than the value of the limit of detection. For example, if a substance is not detected at a concentration of 0.01 mg/l, report the value as < 0.01 mg/l. At present, two methods are considered

to be acceptable to IDEM, amperometric and DPD colorimetric methods, for chlorine concentrations at the level of 0.06 mg/l.

Parameter	LOD	LOQ
Chlorine	0.02 mg/l	0.06 mg/l

Case-Specific MDL

The permittee may determine a case-specific Method Detection Level (MDL) using one of the analytical methods specified above, or any other test method which is approved by IDEM prior to use. The MDL shall be derived by the procedure specified for MDLs contained in 40 CFR Part 136, Appendix B, and the limit of quantitation shall be set equal to 3.18 times the MDL. Other methods may be used if first approved by the U.S. EPA and IDEM.

[9] The *Escherichia coli* (*E. coli*) limitations apply from April 1 through October 31 annually.

[10] The monthly average *E. coli* value shall be calculated as a geometric mean. Per 327 IAC 5-10-6, the concentration of *E. coli* shall not exceed one hundred twenty-five (125) cfu or mpn per 100 milliliters as a geometric mean of the effluent samples taken in a calendar month. No samples may be excluded when calculating the monthly geometric mean.

[11] If less than ten samples are taken and analyzed for *E. coli* in a calendar month, no samples may exceed two hundred thirty-five (235) cfu or mpn as a daily maximum. However, when ten (10) or more samples are taken and analyzed for *E. coli* in a calendar month, not more than ten percent (10%) of those samples may exceed two hundred thirty-five (235) cfu or mpn as a daily maximum. When calculating ten percent, the result must not be rounded up. In reporting for compliance purposes on the Discharge Monitoring Report (DMR) form, the permittee shall record the highest non-excluded value for the daily maximum.

2. Minimum Narrative Limitations

At all times the discharge from any and all point sources specified within this permit shall not cause receiving waters:

a. including waters within the mixing zone, to contain substances, materials, floating debris, oil, scum attributable to municipal, industrial, agricultural, and other land use practices, or other discharges that do any of the following:

(1) will settle to form putrescent or otherwise objectionable deposits;

(2) are in amounts sufficient to be unsightly or deleterious;

(3) produce color, visible oil sheen, odor, or other conditions in such degree as to create a nuisance;

(4) are in amounts sufficient to be acutely toxic to, or to otherwise severely injure or kill aquatic life, other animals, plants, or humans;

(5) are in concentrations or combinations that will cause or contribute to the growth of aquatic plants or algae to such a degree as to create a nuisance, be unsightly, or otherwise impair the designated uses.

b. outside the mixing zone, to contain substances in concentrations that on the basis of available scientific data are believed to be sufficient to injure, be chronically toxic to, or be carcinogenic, mutagenic, or teratogenic to humans, animals, aquatic life, or plants.

3. Additional Discharge Limitations and Monitoring Requirements

Beginning on the effective date of the permit, the effluent from Outfall 001 shall be limited and monitored by the permittee as follows:

TABLE 3

	Quality or Concentration			**Monitoring Requirements**	
Parameter	**Monthly Average**	**Daily Maximum**	**Units**	**Measurement Frequency**	**Sample Type**
Cadmium [1]	----	Report	mg/l	Quarterly	24 Hr. Comp.
Chromium [1]	----	Report	mg/l	Quarterly	24 Hr. Comp.
Copper [1]	----	Report	mg/l	Quarterly	24 Hr. Comp.
Cyanide [1]	----	Report	mg/l	Quarterly	Grab
Lead [1]	----	Report	mg/l	Quarterly	24 Hr. Comp.
Zinc [1]	----	Report	mg/l	Quarterly	24 Hr. Comp.

NOTE: For measurement frequencies less than once per month, the permittee shall report the result from the monitoring period on the Discharge Monitoring Report (DMR) for the final month of the reporting timeframe, beginning with January of each year. For example, for quarterly monitoring, the permittee may conduct sampling within the month of January, February or March. The result from this reporting timeframe shall be reported on the March DMR, regardless of which of the months within the quarter the sample was taken.

[1] The permittee shall measure and report this parameter as Total Recoverable Metal. Cyanide shall be reported as Free Cyanide. Concentrations less than the Limit of Quantitation (LOQ) and greater than

or equal to the Limit of Detection (LOD) shall be reported by the permittee on the discharge monitoring report forms as the actual measured value. Concentrations less than the limit of detection shall be reported on the discharge monitoring report forms as less than the value of the limit of detection. For example, if a substance is not detected and the LOD is 0.1 mg/l, report the value as < 0.1 mg/l.

The following EPA test methods and/or Standard Methods and associated LODs and LOQs are recommended for use in the analysis of the effluent samples. Alternative 40 CFR 136 approved methods may be used provided the LOQ is less than the monthly average and/or daily maximum effluent limitations.

The permittee may determine a case-specific Method Detection Level (MDL) using one of the analytical methods specified below, or any other test method which is approved by IDEM prior to use. The MDL shall be derived by the procedure specified for MDLs contained in 40 CFR Part 136, Appendix B, and the limit of quantitation shall be set equal to 3.18 times the MDL. NOTE: The MDL for purposes of this document, is synonymous with the "limit of detection" or "LOD" as defined in 327 IAC 5-1.5-26: "the minimum concentration of a substance that can be measured and reported with ninety-nine percent (99%) confidence that the analyte concentration is greater than zero (0) for a particular analytical method and sample matrix".

Parameter	EPA Method	LOD	LOQ
Cadmium	3113 B	0.1 µg/l	0.32 µg/l
Chromium	3111 C or 3113 B	2.0 µg/l	6.4 µg/l
Copper	3113 B	1.0 µg/l	3.2 µg/l
Cyanide, Available*	OIA-1677-09 (available)	0.5 µg/l	1.6 µg/l
Cyanide, Available*	Kelada-01 (available)	0.5 µg/l	1.6 µg/l
Lead	3113 B	1.0 µg/l	3.2 µg/l
Zinc	200.7, Revision 4.4 or 3120 B	2.0 µg/l	6.4 µg/l

*Free cyanide shall be reported as free cyanide but measured using one of the approved EPA test methods above for available cyanide.

4. Additional Monitoring Requirements

Beginning on the effective date of this permit, the permittee shall conduct the following monitoring activities:

a. Influent Monitoring

In addition to the requirements contained in Part I.B.2 of the NPDES permit, the permittee shall monitor the influent to its wastewater treatment facility for

the following pollutants. Samples shall be representative of the raw influent in accordance with 327 IAC 5-2-13(b).

TABLE [4]

	Quality or Concentration			Monitoring Requirements	
Parameter	**Monthly Average**	**Daily Maximum**	**Units**	**Measurement Frequency**	**Sample Type**
Cadmium [1]	----	Report	mg/l	Quarterly	24 Hr. Comp.
Chromium [1]	----	Report	mg/l	Quarterly	24 Hr. Comp.
Copper [1]	----	Report	mg/l	Quarterly	24 Hr. Comp.
Cyanide [1]	----	Report	mg/l	Quarterly	Grab
Lead [1]	----	Report	mg/l	Quarterly	24 Hr. Comp.
Zinc [1]	----	Report	mg/l	Quarterly	24 Hr. Comp.

NOTE: For measurement frequencies less than once per month, the permittee shall report the result from the monitoring period on the Discharge Monitoring Report (DMR) for the final month of the reporting timeframe, beginning with January of each year. For example, for quarterly monitoring, the permittee may conduct sampling within the month of January, February <u>or</u> March. The result from this reporting timeframe shall be reported on the March DMR, regardless of which of the months within the quarter the sample was taken.

[1] The permittee shall measure and report this parameter as Total Recoverable Metal. Cyanide shall be reported as Free Cyanide. Concentrations less than the Limit of Quantitation (LOQ) and greater than or equal to the Limit of Detection (LOD) shall be reported by the permittee on the discharge monitoring report forms as the actual measured value. Concentrations less than the limit of detection shall be reported on the discharge monitoring report forms as less than the value of the limit of detection. For example, if a substance is not detected and the LOD is 0.1 mg/l, report the value as < 0.1 mg/l.

b. Priority Pollutants Monitoring

The permittee shall conduct an annual inventory of priority pollutants (see 40 CFR 423, Appendix A) and shall identify and quantify additional organic compounds which occur in the influent, effluent, and sludge. The analytical report shall be sent to the Pretreatment Group. This report is due in December of each year. The inventory shall consist of:

(1) <u>Sampling and Analysis of Influent and Effluent</u>

Sampling shall be conducted on a day when industrial discharges are occurring at normal or maximum levels. The samples shall be 24-hour

flow proportional composites, except for cyanide and volatile organics, which shall be taken by appropriate grab sampling techniques. Analysis for the U.S. EPA organic priority pollutants shall be performed using U.S. EPA methods 624, 625 and 608 in 40 CFR 136, or other equivalent methods approved by U.S. EPA. Equivalent methods must be at least as sensitive and specific as methods 624, 625 and 608.

All samples must be collected, preserved and stored in accordance with 40 CFR 136, Appendix A. Samples for volatile organics must be analyzed within 14 days of collection. Samples for semivolatile organics, PCBs and pesticides must be extracted within 7 days of collection and analyzed within 40 days of extraction. For composite samples, the collection date shall be the date at the end of the daily collection period.

(2) Sampling and Analysis of Sludge

Sampling collection, storage, and analysis shall conform to the U.S. EPA recommended procedures equivalent to methods in accordance with 40 CFR 503. Special sampling and/or preservation techniques will be required for those pollutants which deteriorate rapidly.

Sludge samples for volatile organics must be analyzed within 14 days of collection. Sludge samples for semivolatile organics, PCBs and pesticides must be extracted within 14 days of collection and analyzed within 40 days of extraction.

(3) Additional Pollutant Identification

In addition to the priority organic pollutants, a reasonable attempt shall be made to identify and quantify the ten most abundant constituents of each fraction (excluding priority pollutants and unsubstituted aliphatic compounds) shown to be present by peaks on the total ion plots (reconstructed gas chromatograms) more than ten times higher than the adjacent background noise. Identification shall be attempted through the use of U.S. EPA/NIH computerized library of mass spectra, with visual confirmation by an experienced analyst. Quantification may be based on an order of magnitude estimate based upon comparison with an internal standard.

The annual pretreatment program report required by Part III.A.7. of this permit, should identify the additional steps necessary to determine whether the pollutants that are present interfere, pass through, or otherwise violate 40 CFR 403.2. Upon such determination, the report must also identify the steps taken to develop and enforce local limitations

on industrial discharges for those pollutants. This is a requirement of 40 CFR 403.5.

B. MONITORING AND REPORTING

1. Representative Sampling

Samples and measurements taken as required herein shall be representative of the volume and nature of the monitored discharge flow and shall be taken at times which reflect the full range and concentration of effluent parameters normally expected to be present. Samples shall not be taken at times to avoid showing elevated levels of any parameters.

2. Data on Plant Operation

The raw influent and the wastewater from intermediate unit treatment processes, as well as the final effluent shall be sampled and analyzed for the pollutants and operational parameters specified by the applicable Monthly Report of Operation Form, as appropriate, in accordance with 327 IAC 5-2-13. Except where the permit specifically states otherwise, the sample frequency for the raw influent and intermediate unit treatment process shall be at a minimum the same frequency as that for the final effluent. The measurement frequencies specified in each of the tables in Part I.A. are the minimum frequencies required by this permit.

3. Reporting per Monitoring Period

The permittee shall submit accurate monitoring reports to the Indiana Department of Environmental Management containing results obtained during each monitoring period and shall be submitted no later than the 28th day of the month following each completed monitoring period. Each monitoring period report shall be submitted no less than annually and no more than monthly, as per parameter measurement frequency listed. These reports shall include, but not necessarily be limited to, the Discharge Monitoring Report (DMR) and the Monthly Report of Operation (MRO). Permittees with metals monitoring requirements shall complete and submit the Indiana MRO Form (State Form 10829 MRO for the Activated Sludge Type WWTP – expanded version) to report their influent and/or effluent data for metals and other toxics. Permittees with combined sewer overflow discharges must also submit the CSO Monthly Report of Operation to IDEM by the 28th day of the month following each completed monitoring period. All reports shall be submitted electronically by using the NetDMR application, upon registration, receipt of the NetDMR Subscriber Agreement, and IDEM approval of the proposed NetDMR Signatory. Access the NetDMR website (for initial registration and DMR/MMR submittal) via CDX at: https://cdx.epa.gov/. The Regional Administrator may request the permittee to

submit monitoring reports to the Environmental Protection Agency if it is deemed necessary to assure compliance with the permit.

A calendar week will begin on Sunday and end on Saturday. Partial weeks consisting of four or more days at the end of any month will include the remaining days of the week, which occur in the following month in order to calculate a consecutive seven-day average. This value will be reported as a weekly average or seven-day average on the MRO for the month containing the partial week of four or more days. Partial calendar weeks consisting of less than four days at the end of any month will be carried forward to the succeeding month and reported as a weekly average or a seven-day average for the calendar week that ends with the first Saturday of that month.

4. Definitions

a. Calculation of Averages

Pursuant to 327 IAC 5-2-11(a)(5), the calculation of the average of discharge data shall be determined as follows: For all parameters except fecal coliform and *E. coli*, calculations that require averaging of sample analyses or measurements of daily discharges shall use an arithmetic mean unless otherwise specified in this permit. For fecal coliform, the monthly average discharge and weekly average discharge, as concentrations, shall be calculated as a geometric mean. For *E. coli*, the monthly average discharge, as a concentration, shall be calculated as a geometric mean.

b. Terms

(1) “Monthly Average” -The monthly average discharge means the total mass or flow-weighted concentration of all daily discharges during a calendar month on which daily discharges are sampled or measured, divided by the number of daily discharges sampled and/or measured during such calendar month. The monthly average discharge limitation is the highest allowable average monthly discharge for any calendar month.

(2) “Weekly Average” - The weekly average discharge means the total mass or flow weighted concentration of all daily discharges during any calendar week for which daily discharges are sampled or measured, divided by the number of daily discharges sampled and/or measured during such calendar week. The average weekly discharge limitation is the maximum allowable average weekly discharge for any calendar week.

(3) “Daily Maximum” - The daily maximum discharge limitation is the maximum allowable daily discharge for any calendar day. The “daily discharge” means the total mass of a pollutant discharged during the calendar day or, in the case of a pollutant limited in terms other than mass

pursuant to 327 IAC 5-2-11(e), the average concentration or other measurement of the pollutant specified over the calendar day or any twenty-four hour period that represents the calendar day for purposes of sampling.

(4) "24-hour Composite" - A 24-hour composite sample consists of at least four (4) individual flow-proportioned samples of wastewater, taken by the grab sample method over equal time intervals during the period of operator attendance or by an automatic sampler, and which are combined prior to analysis. A flow proportioned composite sample shall be obtained by:

(a) recording the discharge flow rate at the time each individual sample is taken,

(b) adding together the discharge flow rates recorded from each individual sampling time to formulate the "total flow value,"

(c) dividing the discharge flow rate of each individual sampling time by the total flow value to determine its percentage of the total flow value, and

(d) multiplying the volume of the total composite sample by each individual sample's percentage to determine the volume of that individual sample which will be included in the total composite sample.

Alternatively, a 24-hour composite sample may be obtained by an automatic sampler on an equal time interval basis over a twenty-four hour period provided that a minimum of 24 samples are taken and combined prior to analysis. The samples do not need to be flow-proportioned if the permittee collects samples in this manner.

(5) $CBOD_5$: Five-day Carbonaceous Biochemical Oxygen Demand

(6) TSS: Total Suspended Solids

(7) *E. coli*: *Escherichia coli* bacteria

(8) The "Regional Administrator" is defined as the Region V Administrator, U.S. EPA, located at 77 West Jackson Boulevard, Chicago, Illinois 60604.

(9) The "Commissioner" is defined as the Commissioner of the Indiana Department of Environmental Management, located at the following address: 100 North Senate Avenue, Indianapolis, Indiana 46204-2251.

(10) Limit of Detection or LOD is defined as a measurement of the concentration of a substance that can be measured and reported with 99% confidence that the analyte concentration is greater than zero (0) for a particular analytical method and sample matrix. The LOD is equivalent to the Method Detection Level or MDL.

(11) Limit of Quantitation or LOQ is defined as a measurement of the concentration of a contaminant obtained by using a specified laboratory procedure calibrated at a specified concentration above the method detection level. It is considered the lowest concentration at which a particular contaminant can be quantitatively measured using a specified laboratory procedure for monitoring of the contaminant. This term is also called the limit of quantification or quantification level.

(12) Method Detection Level or MDL is defined as the minimum concentration of an analyte (substance) that can be measured and reported with a ninety-nine percent (99%) confidence that the analyte concentration is greater than zero (0) as determined by the procedure set forth in 40 CFR Part 136, Appendix B. The method detection level or MDL is equivalent to the LOD.

5. Test Procedures

The analytical and sampling methods used shall conform to the version of 40 CFR 136 incorporated by reference in 327 IAC 5. Different but equivalent methods are allowable if they receive the prior written approval of the Commissioner and the U.S. Environmental Protection Agency. When more than one test procedure is approved for the purposes of the NPDES program under 40 CFR 136 for the analysis of a pollutant or pollutant parameter, the test procedure must be sufficiently sensitive as defined at 40 CFR 122.21(e)(3) and 122.44(i)(1)(iv).

6. Recording Results

For each measurement or sample taken pursuant to the requirements of this permit, the permittee shall record and maintain records of all monitoring information on activities under this permit, including the following information:

a. The exact place, date, and time of sampling or measurements;

b. The person(s) who performed the sampling or measurements;

c. The dates and times the analyses were performed;

d. The person(s) who performed the analyses;

e. The analytical techniques or methods used; and

f. The results of all required analyses and measurements.

7. Additional Monitoring by Permittee

If the permittee monitors any pollutant at the location(s) designated herein more frequently than required by this permit, using approved analytical methods as specified above, the results of such monitoring shall be included in the calculation and reporting of the values required in the Monthly Discharge Monitoring Report and on the Monthly Report of Operation form. Such increased frequency shall also be indicated on these forms. Any such additional monitoring data which indicates a violation of a permit limitation shall be followed up by the permittee, whenever feasible, with a monitoring sample obtained and analyzed pursuant to approved analytical methods. The results of the follow-up sample shall be reported to the Commissioner in the Monthly Discharge Monitoring Report.

8. Records Retention

All records and information resulting from the monitoring activities required by this permit, including all records of analyses performed and calibration and maintenance of instrumentation and recording from continuous monitoring instrumentation, shall be retained for a minimum of three (3) years. In cases where the original records are kept at another location, a copy of all such records shall be kept at the permitted facility. The three-year period shall be extended:

a. automatically during the course of any unresolved litigation regarding the discharge of pollutants by the permittee or regarding promulgated effluent guidelines applicable to the permittee; or

b. as requested by the Regional Administrator or the Indiana Department of Environmental Management.

C. REOPENING CLAUSES

In addition to the reopening clause provisions cited at 327 IAC 5-2-16, the following reopening clauses are incorporated into this permit:

1. This permit may be modified or, alternately, revoked and reissued after public notice and opportunity for hearing to incorporate effluent limitations reflecting the results of a wasteload allocation if the Department of Environmental Management determines that such effluent limitations are needed to assure that State Water Quality Standards are met in the receiving stream.

2. This permit may be modified due to a change in sludge disposal standards pursuant to Section 405(d) of the Clean Water Act, if the standards when promulgated contain different conditions, are otherwise more stringent, or control pollutants not addressed by this permit.

3. This permit may be modified, or, alternately, revoked and reissued, to comply with any applicable effluent limitation or standard issued or approved under section 301(b)(2)(C), (D) and (E), 304(b)(2), and 307(a)(2) of the Clean Water Act, if the effluent limitation or standard so issued or approved:

   a. contains different conditions or is otherwise more stringent than any effluent limitation in the permit; or

   b. controls any pollutant not limited in the permit.

4. This permit may be modified or, alternatively, revoked and reissued after public notice and opportunity for hearing to incorporate monitoring requirements and effluent limitations for cadmium, chromium, copper, cyanide, lead, and/or zinc if the Department of Environmental Management determines that such monitoring requirements and effluent limitations are needed to assure that State Water Quality standards are met in the receiving streams.

5. This permit may be modified, or alternately, revoked and reissued after public notice and opportunity for hearing to include Whole Effluent Toxicity (WET) limitations or to include limitations for specific toxicants if the results of the WET testing and/or the Toxicity Reduction Evaluation (TRE) study indicate that such limitations are necessary.

6. This permit may be modified, or alternately, revoked and reissued, after public notice and opportunity for hearing, to include a case-specific Method Detection Level (MDL). The permittee must demonstrate that such action is warranted in accordance with the procedure specified under Appendix B, 40 CFR Part 136, or approved by the Indiana Department of Environmental Management.

7. This permit may be modified or, alternatively, revoked and reissued after public notice and opportunity for hearing to incorporate additional requirements or limitations for specific toxicants if the required additional analyses in Part I.A. indicate that such additional requirements and/or limitations are necessary to assure that State Water Quality Standards are met in the receiving stream.

D. WHOLE EFFLUENT TOXICITY TESTING REQUIREMENTS

To adequately assess the effects of the effluent on aquatic life, the permittee is required by this section of the permit to conduct chronic Whole Effluent Toxicity (WET) testing. Part I.D.1. of this permit describes the testing procedures and

Part I.D.2. describes the Toxicity Reduction Evaluation (TRE) which is only required if the effluent demonstrates toxicity in two (2) consecutive toxicity tests as described in Part I.D.1.f.

1. Whole Effluent Toxicity (WET) Tests

The permittee must conduct the series of aquatic toxicity tests described below to monitor the acute and chronic toxicity of the effluent discharged from Outfall 001.

If toxicity is demonstrated in two (2) consecutive toxicity tests as described in Part I.D.1.f., with any test species during the term of the permit, the permittee is required to conduct a TRE under Part I.D.2.

a. Toxicity Test Procedures and Data Analysis

(1) All test organisms, test procedures, and quality assurance criteria used must be in accordance with the Short-term Methods for Estimating the Chronic Toxicity of Effluents and Receiving Water to Freshwater Organisms, Fourth Edition, Section 11, Fathead Minnow (*Pimephales promelas*) Larval Survival and Growth Test Method 1000.0, and Section 13, Daphnid (*Ceriodaphnia dubia*) Survival and Reproduction Test Method 1002.0, EPA 821-R-02-013, October 2002 (hereinafter "Chronic Toxicity Test Method"), or most recent update that conforms to the version of 40 CFR 136 incorporated by reference in 327 IAC 5. References to specific portions of the Chronic Toxicity Test Method contained in this Part I.D. are provided for informational purposes. If the Chronic Toxicity Test Method is updated, the corresponding provisions of that updated method would be applicable.

(2) Any circumstances not covered by the above methods, or that require deviation from the specified methods must first be approved by the IDEM Permits Branch.

(3) The determination of acute and chronic endpoints of toxicity (LC_{50}), NOEC, and IC_{25} values) must be made in accordance with the procedures in Section 9, "Chronic Toxicity Test Endpoints and Data Analysis" and the Data Analysis procedures as outlined in Section 11 for fathead minnow (Test Method 1000.0; see flowcharts in Figures 5, 6, and 9) and Section 13 for *Ceriodaphnia dubia* (Test Method 1002.0; see flowcharts in Figures 4 and 6) of the Chronic Toxicity Test Method. The IC_{25} value together with 95% confidence intervals calculated by the Linear Interpolation and Bootstrap Methods in Appendix M of the Chronic Toxicity Test Method must be determined in addition to the NOEC value.

b. Types of Whole Effluent Toxicity Tests

(1) The permittee must conduct a 3-brood (7-day) definitive static-renewal daphnid (*Ceriodaphnia dubia*) survival and reproduction toxicity test and a 7-day definitive static-renewal fathead minnow (*Pimephales promelas*) larval survival and growth toxicity test.

(2) All tests must be conducted using 24-hour composite samples of final effluent. Three effluent samples are to be collected on alternate days (e.g. collected on days one, three, and five). The first effluent sample will be used for test initiation and for test solution renewal on day 2. The second effluent sample will be used for test solution renewal on days 3 and 4. The third effluent sample will be used for test solution renewal on days 5, 6, and 7. If shipping problems are encountered with renewal samples after a test has been initiated, the most recently used sample may continue to be used for test renewal, if first approved by the IDEM Permits Branch, but for no longer than 72 hours after first use.

(3) The whole effluent dilution series for the definitive test must include a control and at least five effluent concentrations with a minimum dilution factor of 0.5. The effluent concentrations selected must include and, if practicable, bracket the effluent concentrations associated with the determinations of acute and chronic toxicity provided in Part I.D.1.f. Guidance on selecting effluent test concentrations is included in Section 8.10 of the Chronic Toxicity Test Method. The use of an alternate procedure for selecting test concentrations must first be approved by the IDEM Permits Branch.

(4) If, in any control, more than 10% of the test organisms die in the first 48 hours with a daphnid species or the first 96 hours with a fathead minnow, or more than 20% of the test organisms in 7 days, that test is considered invalid and the toxicity tests must be repeated. In addition, if in the *Ceriodaphnia dubia* survival and reproduction test, the average number of young produced per surviving female in the control group is less than 15, or if 60% of surviving control females have less than three broods; and in the fathead minnow (*Pimephales promelas*) survival and growth test, if the mean dry weight of surviving fish in the control group is less than 0.25 mg, that test is considered invalid and must also be repeated. All other test conditions and test acceptability criteria for the fathead minnow (*Pimephales promelas*) and *Ceriodaphnia dubia* chronic toxicity tests must be in accordance with the test requirements in

Section 11 (Test Method 1000.0), Table 1 and Section 13 (Test Method 1002.0), Table 3, respectively, of the Chronic Toxicity Test Method.

c. Effluent Sample Collection and Chemical Analysis

(1) Whole effluent samples taken for the purposes of toxicity testing must be 24-hour composite samples collected at a point that is representative of the final effluent, but prior to discharge. Effluent sampling for the toxicity testing may be coordinated with other permit sampling requirements as appropriate to avoid duplication. First use of the whole effluent toxicity testing samples must not exceed 36 hours after termination of the 24-hour composite sample collection and must not be used for longer than 72 hours after first use.

(2) Chemical analysis must accompany each effluent sample taken for toxicity testing, including each sample taken for the repeat testing as outlined in Part I.D.1.f.3. The chemical analysis detailed in Part I.A.1. and Part I.A.3. must be conducted for the effluent sample in accordance with Part I.B.5. of this permit.

d. Toxicity Testing Frequency and duration

The toxicity tests specified in Part I.D.1.b. must be conducted once **every six (6) months**, as calculated from the effective date of the permit, for the duration of the permit.

If a TRE is initiated during the term of the permit, after receiving notification under Part I.D.1.e., the Compliance Data Section will suspend the toxicity testing requirements above for the term of the TRE compliance schedule described in Part I.D.2. After successful completion of the TRE, the toxicity tests specified in Part I.D.1.b must be conducted once **every six (6) months**, as calculated from the first day of the first month following successful completion of the post-TRE toxicity tests (see Part I.D.2.c(4.)) for the remainder of the permit term.

e. Reporting

(1) Notifications of the failure of two (2) consecutive toxicity tests and the intent to begin the implementation of a TRE under Part I.D.1.f.(4) must be submitted in writing to the Compliance Data Section of IDEM's Office of Water Quality.

(2) Results of all toxicity tests, including invalid tests, must be reported to IDEM according to the general format and content recommended in the Chronic Toxicity Test Method, Section 10, "Report Preparation and Test Review". However, only the results of valid toxicity tests are to be reported on the discharge monitoring report (DMR). The results of the toxicity tests and laboratory report are due by the earlier of 60 days after completion of the test or the 28th day of the month following the end of the period established in Part I.D.1.d.

(3) The full WET test laboratory report must be submitted to IDEM electronically as an attachment to an e-mail to the Compliance Data Section at wwreports@idem.IN.gov. The results must also be submitted via NetDMR.

(4) For quality control and ongoing laboratory performance, the laboratory report must include results from appropriate standard reference toxicant tests. This will consist of acute (LC_{50} values), if applicable and chronic (NOEC, LOEC, and IC_{25} values) endpoints of toxicity obtained from reference toxicant tests conducted within 30 days of the most current effluent toxicity tests and from similarly obtained historical reference toxicant data with mean values and appropriate ranges for each species tested for at least three months to one year. Toxicity test reports must also include copies of chain-of-custody records and laboratory raw data sheets.

(5) Statistical procedures used to analyze and interpret toxicity data (e.g. Fisher's Exact Test and Steel's Many-one Rank Test for 7-day survival of test organisms; tests of normality (e.g., Shapiro Wilk's Test) and homogeneity of variance (e.g., Bartlett's Test); appropriate parametric (e.g. Dunnett's Test) and non-parametric (e.g. Steel's Many-one Rank Test) significance tests and point estimates (IC_{25}) of effluent toxicity, etc.; together with graphical presentation of survival, growth, and reproduction of test organisms), including critical values, levels of significance, and 95% confidence intervals, must be described and included as part of the toxicity test laboratory report.

(6) For valid toxicity tests, the WET test laboratory report must include a summary table of the results for each species tested, as shown in the table presented below. This table will provide toxicity test results, reported in acute toxic units (TU_a) and chronic toxic units (TU_c) for evaluation under Part I.D.1.f. and reporting on the DMR.

Test Organism [1]	Test Type	Endpoint [2]	Units	Result	Compliance Limit [6]	Pass/ Fail [7]	Reporting
Ceriodaphnia dubia	3-brood (7-day) Definitive Static-Renewal Survival and Reproduction	48-hr. LC_{50}	%	Report			Laboratory Report
			TU_a	Report			
		NOEC Survival	%	Report			
			TU_c	Report			
		NOEC Reproduction	%	Report			
			TU_c	Report			
		IC_{25} Reproduction	%	Report			
			TU_c	Report			
		Toxicity (acute) [3]	TU_a	Report [5]	1.0	Report	Laboratory Report **and NetDMR** (Parameter Code 61425)
		Toxicity (chronic) [4]	TU_c	Report [5]	1.6	Report	Laboratory Report **and NetDMR** (Parameter Code 61426)
Pimephales promelas	7-day Definitive Static-Renewal Larval Survival and Growth	96-hr. LC_{50}	%	Report			Laboratory Report
			TU_a	Report			
		NOEC Survival	%	Report			
			TU_c	Report			
		NOEC Growth	%	Report			
			TU_c	Report			
		IC_{25} Growth	%	Report			
			TU_c	Report			
		Toxicity (acute) [3]	TU_a	Report [5]	1.0	Report	Laboratory Report **and NetDMR** (Parameter Code 61427)
		Toxicity (chronic) [4]	TU_c	Report [5]	1.6	Report	Laboratory Report **and NetDMR** (Parameter Code 61428)

[1] For the WET test laboratory report, eliminate from the table any species that was not tested.

[2] A separate acute test is not required. The endpoint of acute toxicity must be extrapolated from the chronic toxicity test.

[3] The toxicity (acute) endpoint for *Ceriodaphnia dubia* is the 48-hr. LC_{50} results reported in acute toxic units (TU_a). The toxicity (acute) endpoint for *Pimephales promelas* is the 96-hr. LC_{50} result reported in acute toxic units (TU_a).

[4] The toxicity (chronic) endpoint for *Ceriodaphnia dubia* is the higher of the NOEC Survival, NOEC Reproduction, and IC_{25} Reproduction values reported in chronic toxic units (TU_c).

[5] Report the values for acute and chronic endpoints of toxicity determined in [3] and [4] for the corresponding species. These values are the ones that need to be reported on the DMR.

[6] These values do not represent effluent limitations, but rather exceedance of these values results in a demonstration of toxicity that triggers additional action and reporting by the permittee.

[7] If the toxicity result (in TU_s) is less than or equal to the compliance limit, report "Pass". If the toxicity result (in TU_s) exceeds the compliance limit, report "Fail".

f. Demonstration of Toxicity

(1) Toxicity (acute) will be demonstrated if the effluent is observed to have exceeded **1.0** TU_a (acute toxic units) for *Ceriodaphnia dubia* in 48 hours or in 96 hours for *Pimephales promelas*. For this purpose, a separate acute toxicity test is not required. The results for the acute toxicity demonstration must be extrapolated from the chronic toxicity test. For the purpose of selecting test concentrations under Part I.D.1.b.2., the effluent concentration associated with acute toxicity is 100%.

(2) Toxicity (chronic) will be demonstrated if the effluent is observed to have exceeded **1.6** TU_c (chronic toxic units) for *Ceriodaphnia* or *Pimephales promelas* from the chronic toxicity test. For the purpose of selecting test concentrations under Part I.D.1.b.2., the effluent concentration associated with chronic toxicity is 62.5%.

(3) If toxicity (acute) or toxicity (chronic) is demonstrated in any of the chronic toxicity tests specified above, a repeat chronic toxicity test using the procedures in Part I.D.1. of this permit and the same test species must be initiated within two (2) weeks of test failure. During the sampling for any

repeat tests, the permittee must also collect and preserve sufficient effluent samples for use in any Toxicity Identification Evaluation (TIE) and/or TRE, if necessary.

(4) If any two (2) consecutive chronic toxicity tests, including any and all repeat tests, demonstrate acute or chronic of toxicity, the permittee must notify the Compliance Data Section under Part I.D.1.e. within 30 days of the termination of the second test, and begin the implementation of TRE as described in Part I.D.2. After receiving notification from the permittee, The Compliance Data Section will suspend the whole effluent toxicity testing requirements in Part I.D.1. for the term of the TRE compliance schedule.

g. Definitions

(1) "Acute toxic unit" or "TU_a" is defined as $100/LC_{50}$ where the LC_{50} is expressed as a percent effluent in the test medium of an acute whole effluent toxicity (WET) test that is statistically or graphically estimated to be lethal to fifty percent (50%) of the test organism.

(2) "Chronic toxic unit" or "TU_c" is defined as 100/NOEC or $100/IC_{25}$, where the NOEC or IC_{25} are expressed as a percent effluent in the test medium.

(3) "Inhibition concentration 25" or "IC_{25}" means the toxicant (effluent) concentration that would cause a twenty-five percent (25%) reduction in a nonquantal biological measurement for the test population. For example, the IC_{25} is the concentration of toxicant (effluent) that would cause a twenty-five percent (25%) reduction in mean young per female or in growth for the test population.

(4) "No observed effect concentration" or "NOEC" is the highest concentration of toxicant (effluent) to which organisms are exposed in a full life cycle or partial life cycle (short term) test, that causes no observable adverse effects on the test organisms, that is, the highest concentration of toxicant (effluent) in which the values for the observed responses are not statistically significantly different from the controls.

2. <u>Toxicity Reduction Evaluation (TRE) Schedule of Compliance</u>

The development and implementation of a TRE is only required if toxicity is demonstrated in two (2) consecutive tests as described in Part I.D.1.f.(4). The

post-TRE toxicity testing requirements in Part I.D.2.c. must also be completed as part of the TRE compliance schedule.

Milestone Dates: See a. through e. below for more detail on the TRE milestone dates.

Requirement	**Deadline**
Development and Submittal of a TRE Plan	Within 90 days of the date of two (2) consecutive failed toxicity tests.
Initiate a TRE Study	Within 30 days of TRE Plan submittal
Submit TRE Progress Reports	Every 90 days beginning six (6) months from the date of two (2) consecutive failed toxicity tests.
Post-TRE Toxicity Testing Requirements	Immediately upon completion of the TRE, conduct three (3) consecutive months of toxicity tests with both test species; if no acute or chronic toxicity is shown with any test species, reduce toxicity tests to once **every six (6) months** for the remainder of the permit term. If post-TRE toxicity testing demonstrates toxicity, continue the TRE study.
Submit Final TRE Report	Within 90 days of successfully completing the TRE (including the post-TRE toxicity testing requirements), not to exceed three (3) years from the date that toxicity is initially demonstrated in (two (2) consecutive toxicity tests).

a. Development of TRE Plan

Within 90 days of the date of two (2) consecutive failed toxicity tests (i.e. the date of termination of the second test), the permittee must submit plans for an effluent TRE to the Compliance Data Section. The TRE plan must include appropriate measures to characterize the causative toxicants and reduce toxicity in the effluent discharge to levels that demonstrate no toxicity with any test species as described in Part I.D.1.f. Guidance on conducting effluent toxicity reduction evaluations is available from EPA and from the EPA publications listed below:

(1) Method for Aquatic Toxicity Identification Evaluations:

Phase I Toxicity Characterization Procedures, Second Edition (EPA/600/6-91/003), February 1991.

Phase II Toxicity Identification Procedures for Samples Exhibiting Acute and Chronic Toxicity (EPA/600/R-92/080), September 1993.

Phase III Toxicity Confirmation Procedures for Samples Exhibiting Acute and Chronic Toxicity (EPA/600/R-92/081), September 1993.

(2) Toxicity Identification Evaluation: Characterization of chronically Toxic Effluents, Phase I (EPA/600/6-91/005F), May 1992.

(3) Toxicity Reduction evaluation Guidance for Municipal Wastewater Treatment Plants (EPA/833B-99-002), August 1999.

(4) Clarifications Regarding Toxicity Reduction and Identification Evaluations in the National Pollutant Discharge Elimination System Program, U.S. EPA, March 27, 2001.

b. Conduct the TRE

Within 30 days after submittal of the TRE plan to the Compliance Data Section, the permittee must initiate the TRE consistent with the TRE plan.

c. Post-TRE Toxicity Testing Requirements

(1) After completing the TRE, the permittee must conduct monthly post-TRE toxicity tests with the two (2) test species *Ceriodaphnia dubia* and fathead minnow (*Pimephales promelas*) for a period of three (3) consecutive months.

(2) If the three (3) monthly tests demonstrate no toxicity with any test species as described in Part I.D.1.f., the TRE will be considered successful. Otherwise, the TRE study must be continued.

(3) The post-TRE toxicity tests must be conducted in accordance with the procedures in Part I.D.1. The results of these tests must be submitted as part of the final TRE Report required under Part I.D.2.d.

(4) After successful completion of the TRE, the permittee must resume <u>the chronic toxicity tests required in Part I.D.1</u>. The established starting date

for the frequency in Part I.D.1.d. is the first day of the first month following successful completion of the post-TRE toxicity tests.

d. Reporting

(1) Progress reports must be submitted every 90 days to the Compliance Data Section beginning six (6) months from the date of two (2) consecutive failed toxicity tests. Each TRE progress report must include a listing of proposed activities for the next quarter and a schedule to reduce toxicity in the effluent discharge to acceptable levels through control of the toxicant source or treatment of whole effluent.

(2) Within 90 days of successfully completing the TRE, including the three (3) consecutive monthly tests required as part of the post-TRE toxicity testing requirements under Part I.D.2.c., the permittee must submit to the Compliance Data Section a final TRE Report that includes a discussion of the TRE results, along with the starting date established under Part I.D.2.c.(4). for the continuation of the toxicity testing required in Part I.D.1.

e. Compliance Date

The permittee must complete items a., b., c., and d. from Part I.D.2. and reduce toxicity in the effluent discharge to acceptable levels as soon as possible, but <u>no later than three (3) years from the date that toxicity is initially demonstrated in two (2) consecutive toxicity tests (i.e. the date of the termination of the second test) as described in Part I.D.1.f.4</u>.

PART II

STANDARD CONDITIONS FOR NPDES PERMITS

A. GENERAL CONDITIONS

1. Duty to Comply

   The permittee shall comply with all terms and conditions of this permit in accordance with 327 IAC 5-2-8(1) and all other requirements of 327 IAC 5-2-8. Any permit noncompliance constitutes a violation of the Clean Water Act and IC 13 and is grounds for enforcement action or permit termination, revocation and reissuance, modification, or denial of a permit renewal application.

   It shall not be a defense for a permittee in an enforcement action that it would have been necessary to halt or reduce the permitted activity in order to maintain compliance with the conditions of the permit.

2. Duty to Mitigate

   In accordance with 327 IAC 5-2-8(3), the permittee shall take all reasonable steps to minimize or correct any adverse impact to the environment resulting from noncompliance with this permit. During periods of noncompliance, the permittee shall conduct such accelerated or additional monitoring for the affected parameters, as appropriate or as requested by IDEM, to determine the nature and impact of the noncompliance.

3. Duty to Provide Information

   The permittee shall submit any information that the permittee knows or has reason to believe would constitute cause for modification or revocation and reissuance of the permit at the earliest time such information becomes available, such as plans for physical alterations or additions to the facility that:

   a. could significantly change the nature of, or increase the quantity of, pollutants discharged; or

   b. the Commissioner may request to evaluate whether such cause exists.

   In accordance with 327 IAC 5-1-3(a)(5), the permittee must also provide any information reasonably requested by the Commissioner.

4. Duty to Reapply

If the permittee wishes to continue an activity regulated by this permit after the expiration date of this permit, the permittee must obtain and submit a renewal of this permit in accordance with 327 IAC 5-3-2(a)(2). It is the permittee's responsibility to obtain and submit the application. In accordance with 327 IAC 5-2-3(c), the owner of the facility or operation from which a discharge of pollutants occurs is responsible for applying for and obtaining the NPDES permit, except where the facility or operation is operated by a person other than an employee of the owner in which case it is the operator's responsibility to apply for and obtain the permit. The application must be submitted at least 180 days before the expiration date of this permit. This deadline may be extended if:

a. permission is requested in writing before such deadline;

b. IDEM grants permission to submit the application after the deadline; and

c. the application is received no later than the permit expiration date.

As required under 327 IAC 5-2-3(g)(1) and (2), POTWs with design influent flows equal to or greater than one million (1,000,000) gallons per day and POTWs with an approved pretreatment program or that are required to develop a pretreatment program, will be required to provide the results of whole effluent toxicity testing as part of their NPDES renewal application.

5. Transfers

In accordance with 327 IAC 5-2-8(4)(D), this permit is nontransferable to any person except in accordance with 327 IAC 5-2-6(c). This permit may be transferred to another person by the permittee, without modification or revocation and reissuance being required under 327 IAC 5-2-16(c)(1) or 16(e)(4), if the following occurs:

a. the current permittee notified the Commissioner at least thirty (30) days in advance of the proposed transfer date.

b. a written agreement containing a specific date of transfer of permit responsibility and coverage between the current permittee and the transferee (including acknowledgment that the existing permittee is liable for violations up to that date, and the transferee is liable for violations from that date on) is submitted to the Commissioner.

c. the transferee certifies in writing to the Commissioner their intent to operate the facility without making such material and substantial alterations or additions to the facility as would significantly change the nature or quantities

of pollutants discharged and thus constitute cause for permit modification under 327 IAC 5-2-16(d). However, the Commissioner may allow a temporary transfer of the permit without permit modification for good cause, e.g., to enable the transferee to purge and empty the facility's treatment system prior to making alterations, despite the transferee's intent to make such material and substantial alterations or additions to the facility.

d. the Commissioner, within thirty (30) days, does not notify the current permittee and the transferee of the intent to modify, revoke and reissue, or terminate the permit and to require that a new application be filed rather than agreeing to the transfer of the permit.

The Commissioner may require modification or revocation and reissuance of the permit to identify the new permittee and incorporate such other requirements as may be necessary under the Clean Water Act or state law.

6. Permit Actions

In accordance with 327 IAC 5-2-16(b) and 327 IAC 5-2-8(4), this permit may be modified, revoked and reissued, or terminated for cause, including, but not limited to, the following:

a. Violation of any terms or conditions of this permit;

b. Failure of the permittee to disclose fully all relevant facts or misrepresentation of any relevant facts in the application, or during the permit issuance process; or

c. A change in any condition that requires either a temporary or permanent reduction or elimination of the authorized discharge controlled by the permittee (e.g., plant closure, termination of the discharge by connecting to a POTW, a change in state law or information indicating the discharge poses a substantial threat to human health or welfare).

Filing of either of the following items does not stay or suspend any permit condition: (1) a request by the permittee for a permit modification, revocation and reissuance, or termination, or (2) submittal of information specified in Part II.A.3 of the permit including planned changes or anticipated noncompliance.

The permittee shall submit any information that the permittee knows or has reason to believe would constitute cause for modification or revocation and reissuance of the permit at the earliest time such information becomes available, such as plans for physical alterations or additions to the permitted facility that:

1. could significantly change the nature of, or increase the quantity of, pollutants discharged; or

2. the commissioner may request to evaluate whether such cause exists.

7. Property Rights

Pursuant to 327 IAC 5-2-8(6) and 327 IAC 5-2-5(b), the issuance of this permit does not convey any property rights of any sort or any exclusive privileges, nor does it authorize any injury to persons or private property or an invasion of rights, any infringement of federal, state, or local laws or regulations. The issuance of the permit also does not preempt any duty to obtain any other state, or local assent required by law for the discharge or for the construction or operation of the facility from which a discharge is made.

8. Severability

In accordance with 327 IAC 1-1-3, the provisions of this permit are severable and, if any provision of this permit or the application of any provision of this permit to any person or circumstance is held invalid, the invalidity shall not affect any other provisions or applications of the permit which can be given effect without the invalid provision or application.

9. Oil and Hazardous Substance Liability

Nothing in this permit shall be construed to relieve the permittee from any responsibilities, liabilities, or penalties to which the permittee is or may be subject to under Section 311 of the Clean Water Act.

10. State Laws

Nothing in this permit shall be construed to preclude the institution of any legal action or relieve the permittee from any responsibilities, liabilities, or penalties established pursuant to any applicable state law or regulation under authority preserved by Section 510 of the Clean Water Act or state law.

11. Penalties for Violation of Permit Conditions

Pursuant to IC 13-30-4, a person who violates any provision of this permit, the water pollution control laws; environmental management laws; or a rule or standard adopted by the Environmental Rules Board is liable for a civil penalty not to exceed twenty-five thousand dollars ($25,000) per day of any violation.

Pursuant to IC 13-30-5, a person who obstructs, delays, resists, prevents, or interferes with (1) the department; or (2) the department's personnel or

designated agent in the performance of an inspection or investigation performed under IC 13-14-2-2 commits a class C infraction.

Pursuant to IC 13-30-10-1.5(e), a person who willfully or negligently violates any NPDES permit condition or filing requirement, or any applicable standards or limitations of IC 13-18-3-2.4, IC 13-18-4-5, IC 13-18-12, IC 13-18-14, IC 13-18-15, or IC 13-18-16, commits a Class A misdemeanor.

Pursuant to IC 13-30-10-1.5(i), an offense under IC 13-30-10-1.5(e) is a Level 4 felony if the person knowingly commits the offense or knows that the commission of the offense places another person in imminent danger of death or serious bodily injury. An offense under IC 13-30-10-1.5(e) is a Level 3 felony if it results in serious bodily injury to any person, and a Level 2 felony if it results in death to any person.

Pursuant to IC 13-30-10-1.5(g), a person who willfully or recklessly violates any applicable standards or limitations of IC 13-18-8 commits a Class B misdemeanor.

Pursuant to IC 13-30-10-1.5(h), a person who willfully or recklessly violates any applicable standards or limitations of IC 13-18-9, IC 13-18-10, or IC 13-18-10.5 commits a Class C misdemeanor.

Pursuant to IC 13-30-10-1, a person who knowingly or intentionally makes any false material statement, representation, or certification in any NPDES form, notice, or report commits a Class B misdemeanor.

12. Penalties for Tampering or Falsification

In accordance with 327 IAC 5-2-8(10), the permittee shall comply with monitoring, recording, and reporting requirements of this permit. The Clean Water Act, as well as IC 13-30-10-1, provides that any person who knowingly or intentionally (a) destroys, alters, conceals, or falsely certifies a record, (b) tampers with, falsifies, or renders inaccurate or inoperative a recording or monitoring device or method, including the data gathered from the device or method, or (c) makes a false material statement or representation in any label, manifest, record, report, or other document; all required to be maintained under the terms of a permit issued by the department commits a Class B misdemeanor.

13. Toxic Pollutants

If any applicable effluent standard or prohibition (including any schedule of compliance specified in such effluent standard or prohibition) is established under Section 307(a) of the Clean Water Act for a toxic pollutant injurious to human health, and that standard or prohibition is more stringent than any

limitation for such pollutant in this permit, this permit shall be modified or revoked and reissued to conform to the toxic effluent standard or prohibition in accordance with 327 IAC 5-2-8(5). Effluent standards or prohibitions established under Section 307(a) of the Clean Water Act for toxic pollutants injurious to human health are effective and must be complied with, if applicable to the permittee, within the time provided in the implementing regulations, even absent permit modification.

14. Operator Certification

The permittee shall have the wastewater treatment facilities under the responsible charge of an operator certified by the Commissioner in a classification corresponding to the classification of the wastewater treatment plant as required by IC 13-18-11-11 and 327 IAC 5-22. In order to operate a wastewater treatment plant the operator shall have qualifications as established in 327 IAC 5-22-7. The permittee shall designate one (1) person as the certified operator with complete responsibility for the proper operations of the wastewater facility.

327 IAC 5-22-10.5(a) provides that a certified operator may be designated as being in responsible charge of more than one (1) wastewater treatment plant, if it can be shown that he will give adequate supervision to all units involved. Adequate supervision means that sufficient time is spent at the plant on a regular basis to assure that the certified operator is knowledgeable of the actual operations and that test reports and results are representative of the actual operations conditions. In accordance with 327 IAC 5-22-3(11), “responsible charge” means the person responsible for the overall daily operation, supervision, or management of a wastewater facility.

Pursuant to 327 IAC 5-22-10(4), the permittee shall notify IDEM when there is a change of the person serving as the certified operator in responsible charge of the wastewater treatment facility. The notification shall be made no later than thirty (30) days after a change in the operator.

15. Construction Permit

Except in accordance with 327 IAC 3, the permittee shall not construct, install, or modify any water pollution treatment/control facility as defined in 327 IAC 3-1-2(24). Upon completion of any construction, the permittee must notify the Compliance Data Section of the Office of Water Quality in writing.

16. Inspection and Entry

In accordance with 327 IAC 5-2-8(8), the permittee shall allow the Commissioner, or an authorized representative, (including an authorized contractor acting as a

representative of the Commissioner) upon the presentation of credentials and other documents as may be required by law, to:

a. Enter upon the permittee's premises where a point source, regulated facility, or activity is located or conducted, or where records must be kept pursuant to the conditions of this permit;

b. Have access to and copy, at reasonable times, any records that must be kept under the terms and conditions of this permit;

c. Inspect at reasonable times any facilities, equipment or methods (including monitoring and control equipment), practices, or operations regulated or required pursuant to this permit; and

d. Sample or monitor at reasonable times, any discharge of pollutants or internal wastestreams for the purposes of evaluating compliance with the permit or as otherwise authorized.

17. New or Increased Discharge of Pollutants

This permit prohibits the permittee from undertaking any action that would result in a new or increased discharge of a bioaccumulative chemical of concern (BCC) or a new or increased permit limit for a regulated pollutant that is not a BCC unless one of the following is completed prior to the commencement of the action:

a. Information is submitted to the Commissioner demonstrating that the proposed new or increased discharges will not cause a significant lowering of water quality as defined under 327 IAC 2-1.3-2(50). Upon review of this information, the Commissioner may request additional information or may determine that the proposed increase is a significant lowering of water quality and require the submittal of an antidegradation demonstration.

b. An antidegradation demonstration is submitted to and approved by the Commissioner in accordance with 327 IAC 2-1.3-5 and 327 IAC 2-1.3-6.

B. MANAGEMENT REQUIREMENTS

1. Facility Operations, Maintenance, and Quality Control

a. In accordance with 327 IAC 5-2-8(9), the permittee shall at all times maintain in good working order and efficiently operate all facilities and systems (and related appurtenances, i.e., equipment used for measuring and determining compliance) for collection and treatment that are:

(1) installed or used by the permittee; and

(2) necessary for achieving compliance with the terms and conditions of the permit.

Neither 327 IAC 5-2-8(9), nor this provision, shall be construed to require the operation of installed treatment facilities that are unnecessary for achieving compliance with the terms and conditions of the permit. This provision also does not prohibit taking redundant treatment units off line, provided that the permittee is at all times: maintaining in good working order and efficiently operating all facilities and systems; providing best quality effluent; and achieving compliance with the terms and conditions of the permit.

b. The permittee shall operate the permitted facility in a manner which will minimize upsets and discharges of excessive pollutants. The permittee shall properly remove and dispose of excessive solids and sludges.

c. The permittee shall provide an adequate operating staff which is duly qualified to carry out the operation, maintenance, and testing functions required to ensure compliance with the conditions of this permit.

d. Maintenance of all waste collection, control, treatment, and disposal facilities shall be conducted in a manner that complies with the bypass provisions set forth below.

e. Pursuant to 327 IAC 5-22-10(1), the permittee is responsible for providing adequate funding for and oversight of the wastewater treatment plant and collection system to ensure proper operation, maintenance, management, and supervision.

f. Any extensions to the sewer system must continue to be constructed on a separated basis. Plans and specifications, when required, for extension of the sanitary system must be submitted to the Facility Construction and Engineering Support Section, Office of Water Quality in accordance with 327 IAC 3-2-2. There shall also be an ongoing preventative maintenance program for the sanitary sewer system.

2. <u>Bypass of Treatment Facilities</u>

Pursuant to 327 IAC 5-2-8(12):

a. Terms as defined in 327 IAC 5-2-8(12)(A):

(1) “Bypass” means the intentional diversion of a waste stream from any portion of a treatment facility.

(2) “Severe property damage” means substantial physical damage to property, damage to the treatment facilities which would cause them to become inoperable, or substantial and permanent loss of natural resources which can reasonably be expected to occur in the absence of a bypass. Severe property damage does not mean economic loss caused by delays in production.

b. Bypasses, as defined above, are prohibited, and the Commissioner may take enforcement action against a permittee for bypass, unless:

(1) The bypass was unavoidable to prevent loss of life, personal injury, or severe property damage, as defined above;

(2) There were no feasible alternatives to the bypass, such as the use of auxiliary treatment facilities, retention of untreated wastes, or maintenance during normal periods of equipment downtime. This condition is not satisfied if adequate back up equipment should have been installed in the exercise of reasonable engineering judgment to prevent a bypass that occurred during normal periods of equipment downtime or preventive maintenance; and

(3) The permittee submitted notices as required under Part II.B.2.d; or

(4) The condition under Part II.B.2.f below is met.

c. Bypasses that result in death or acute injury or illness to animals or humans must be reported in accordance with the “Spill Response and Reporting Requirements” in 327 IAC 2-6.1, including calling 888/233-7745 as soon as possible, but within two (2) hours of discovery. However, under 327 IAC 2-6.1-3(1), when the constituents of the bypass are regulated by this permit, and death or acute injury or illness to animals or humans does not occur, the reporting requirements of 327 IAC 2-6.1 do not apply.

d. The permittee must provide the Commissioner with the following notice:

(1) If the permittee knows or should have known in advance of the need for a bypass (anticipated bypass), it shall submit prior written notice. If possible, such notice shall be provided at least ten (10) days before the date of the bypass for approval by the Commissioner.

(2) The permittee shall orally report an unanticipated bypass within 24 hours of becoming aware of the bypass event. The permittee must also provide a written report within five (5) days of the time the permittee becomes aware of the bypass event. **Note that electronic submission will be the only acceptable method after December 21, 2025**. The report must

contain a description of the noncompliance (i.e. the bypass) and its cause; the period of noncompliance, including exact dates and times; if the cause of noncompliance has not been corrected, the anticipated time it is expected to continue; and steps taken or planned to reduce, eliminate and prevent recurrence of the bypass event. If a complete email submittal is sent within 24 hours of the time that the permittee became aware of the unanticipated bypass event, then that report will satisfy both the oral and written reporting requirement.

e. The Commissioner may approve an anticipated bypass, after considering its adverse effects, if the Commissioner determines that it will meet the conditions listed above in Part II.B.2.b. The Commissioner may impose any conditions determined to be necessary to minimize any adverse effects.

f. The permittee may allow any bypass to occur that does not cause a violation of the effluent limitations in the permit, but only if it also is for essential maintenance to ensure efficient operation. These bypasses are not subject to the provisions of Part II.B.2.b., d and e of this permit.

3. <u>Upset Conditions</u>

Pursuant to 327 IAC 5-2-8(13):

a. “Upset” means an exceptional incident in which there is unintentional and temporary noncompliance with technology-based permit effluent limitations because of factors beyond the reasonable control of the permittee. An upset does not include noncompliance to the extent caused by operational error, improperly designed treatment facilities, inadequate treatment facilities, lack of preventive maintenance, or careless or improper operation.

b. An upset shall constitute an affirmative defense to an action brought for noncompliance with such technology-based permit effluent limitations if the requirements of Paragraph c of this subsection, are met.

c. A permittee who wishes to establish the affirmative defense of upset shall demonstrate, through properly signed, contemporaneous operating logs or other relevant evidence, that:

(1) An upset occurred and the permittee has identified the specific cause(s) of the upset;

(2) The permitted facility was at the time being operated in compliance with proper operation and maintenance procedures;

(3) The permittee complied with any remedial measures required under "Duty to Mitigate", Part II.A.2; and

(4) The permittee submitted notice of the upset as required in the "Incident Reporting Requirements," Part II.C.3, or 327 IAC 2-6.1, whichever is applicable. However, under 327 IAC 2-6.1-3(1), when the constituents of the discharge are regulated by this permit, and death or acute injury or illness to animals or humans does not occur, the reporting requirements of 327 IAC 2-6.1 do not apply.

d. In any enforcement proceeding, the permittee seeking to establish the occurrence of an upset has the burden of proof pursuant to 40 CFR 122.41(n)(4).

4. Removed Substances

Solids, sludges, filter backwash, or other pollutants removed from or resulting from treatment or control of wastewaters shall be disposed of in a manner such as to prevent any pollutant from such materials from entering waters of the State and to be in compliance with all Indiana statutes and regulations relative to liquid and/or solid waste disposal.

a. Collected screenings, slurries, sludges, and other such pollutants shall be disposed of in accordance with provisions set forth in 329 IAC 10, 327 IAC 6.1, or another method approved by the Commissioner.

b. The permittee shall comply with existing federal regulations governing solids disposal, and with applicable provisions of 40 CFR Part 503, the federal sludge disposal regulation standards.

c. The permittee shall notify the Commissioner prior to any changes in sludge use or disposal practices.

d. The permittee shall maintain records to demonstrate its compliance with the above disposal requirements.

5. Power Failures

In accordance with 327 IAC 5-2-10 and 327 IAC 5-2-8(14) in order to maintain compliance with the effluent limitations and prohibitions of this permit, the permittee shall either:

a. provide an alternative power source sufficient to operate facilities utilized by the permittee to maintain compliance with the effluent limitations and conditions of this permit, or

b. shall halt, reduce or otherwise control all discharge in order to maintain compliance with the effluent limitations and conditions of this permit upon the reduction, loss, or failure of one or more of the primary sources of power to facilities utilized by the permittee to maintain compliance with the effluent limitations and conditions of this permit.

6. Unauthorized Discharge

Any overflow or release of sanitary wastewater from the wastewater treatment facilities or collection system that results in a discharge to waters of the state and is not specifically authorized by this permit is expressly prohibited. These discharges are subject to the reporting requirements in Part II.C.3 of this permit.

C. REPORTING REQUIREMENTS

1. Planned Changes in Facility or Discharge

Pursuant to 327 IAC 5-2-8(11)(F) and 5-2-16(d), the permittee shall give notice to the Commissioner as soon as possible of any planned alterations or additions to the facility (which includes any point source) that could significantly change the nature of, or increase the quantity of, pollutants discharged. Following such notice, the permit may be modified to revise existing pollutant limitations and/or to specify and limit any pollutants not previously limited. Material and substantial alterations or additions to the permittee's operation that were not covered in the permit (e.g., production changes, relocation or combination of discharge points, changes in the nature or mix of products produced) are also cause for modification of the permit. However those alterations which constitute total replacement of the process or the production equipment causing the discharge converts it into a new source, which requires the submittal of a new NPDES application.

2. Monitoring Reports

Pursuant to 327 IAC 5-2-8(10), 327 IAC 5-2-13, and 327 IAC 5-2-15, monitoring results shall be reported at the intervals and in the form specified in "Data On Plant Operation", Part I.B.2.

3. Incident Reporting Requirements

Pursuant to 327 IAC 5-2-8(11) and 327 IAC 5-1-3, the permittee shall orally report to the Commissioner information on the following incidents within 24 hours from the time permittee becomes aware of such occurrence. If the incident meets the emergency criteria of item b (Part II.C.3.b) or 327 IAC 2-6.1, then the report shall be made as soon as possible, but within two (2) hours of discovery. However, under 327 IAC 2-6.1-3(1), when the constituents of the discharge are

regulated by this permit, and death or acute injury or illness to animals or humans does not occur, the reporting requirements of 327 IAC 2-6.1 do not apply.

a. Any unanticipated bypass which exceeds any effluent limitation in the permit;

b. Any emergency incident which may pose a significant danger to human health or the environment. Reports under this item shall be made as soon as the permittee becomes aware of the incident by calling 317/233-7745 (888/233-7745 toll free in Indiana). This number should only be called when reporting these emergency events;

c. Any upset (as defined in Part II.B.3 above) that exceeds any technology-based effluent limitations in the permit;

d. Any release, including basement backups, from the sanitary sewer system (including satellite sewer systems operated or maintained by the permittee) not specifically authorized by this permit. Reporting of known releases from private laterals not caused by a problem in the sewer system owned or operated by the permittee is not required under Part II.C.3, however, documentation of such events must be maintained by the permittee and available for review by IDEM staff; or

e. Any discharge from any outfall from which discharge is explicitly prohibited by this permit as well as any discharge from any other outfall or point not listed in this permit.

The permittee can make the oral reports by calling 317/232-8670 during regular business hours and asking for the Compliance Data Section, or by calling (317/233-7745) (888/233-7745 toll free in Indiana) during non-business hours. A written submission shall also be provided within five (5) days of the time the permittee becomes aware of the circumstances. The written submission shall contain: a description of the event and its cause; the period of occurrence, including exact dates and times, and, if the event has not concluded, the anticipated time it is expected to continue; and steps taken or planned to reduce, mitigate and eliminate the event and steps taken or planned to prevent its recurrence. The Commissioner may waive the written report on a case-by-case basis if the oral report has been received within 24 hours. Alternatively the permittee may submit a “Bypass Overflow/Incident Report” (State Form 48373) or a “Noncompliance Notification Report” (State Form 54215), whichever is appropriate, to IDEM at wwreports@idem.IN.gov. If a complete submittal is sent within 24 hours of the time that the permittee became aware of the occurrence, then that report will satisfy both the oral and written reporting requirements.

4. Other Noncompliance

Pursuant to 327 IAC 5-2-8(11)(D), the permittee shall report any instance of noncompliance not reported under the "Incident Reporting Requirements" in Part II.C.3 at the time the pertinent Discharge Monitoring Report is submitted. The written submission shall contain: a description of the noncompliance and its cause; the period of noncompliance, including exact dates and times, and, if the noncompliance has not been corrected, the anticipated time it is expected to continue; and steps taken or planned to reduce, eliminate and prevent the noncompliance.

5. Other Information

Pursuant to 327 IAC 5-2-8(11)(E), where the permittee becomes aware that it failed to submit any relevant facts or submitted incorrect information in a permit application or in any report to the Commissioner, the permittee shall promptly submit such facts or corrected information to the Commissioner.

6. Signatory Requirements

Pursuant to 327 IAC 5-2-22 and 327 IAC 5 2 8(15):

a. All reports required by the permit and other information requested by the Commissioner shall be signed and certified by a person described below or by a duly authorized representative of that person:

(1) For a corporation: by a principal executive defined as a president, secretary, treasurer, any vice-president of the corporation in charge of a principal business function, or any other person who performs similar policy-making functions for the corporation or the manager of one or more manufacturing, production, or operating facilities employing more than two hundred fifty (250) persons or having gross annual sales or expenditures exceeding twenty-five million dollars ($25,000,000) (in second quarter 1980 dollars), if authority to sign documents has been assigned or delegated to the manager in accordance with corporate procedures.

(2) For a partnership or sole proprietorship: by a general partner or the proprietor, respectively; or

(3) For a federal, state, or local governmental body or any agency or political subdivision thereof: by either a principal executive officer or ranking elected official.

b. A person is a duly authorized representative only if:

(1) The authorization is made in writing by a person described above.

(2) The authorization specifies either an individual or a position having responsibility for the overall operation of the regulated facility or activity, such as the position of plant manager, operator of a well or a well field, superintendent, or position of equivalent responsibility. (A duly authorized representative may thus be either a named individual or any individual occupying a named position.); and

(3) The authorization is submitted to the Commissioner.

c. Electronic Signatures. If documents described in this section are submitted electronically by or on behalf of the NPDES-regulated facility, any person providing the electronic signature for such documents shall meet all relevant requirements of this section, and shall ensure that all of the relevant requirements of 40 CFR part 3 (including, in all cases, subpart D to part 3) (Cross-Media Electronic Reporting) and 40 CFR part 127 (NPDES Electronic Reporting Requirements) are met for that submission.

d. Certification. Any person signing a document identified under paragraphs a and b of this section, shall make the following certification:

"I certify under penalty of law that this document and all attachments were prepared under my direction or supervision in accordance with a system designed to assure that qualified personnel properly gather and evaluate the information submitted. Based on my inquiry of the person or persons who manage the system, or those persons directly responsible for gathering the information, the information submitted is, to the best of my knowledge and belief, true, accurate, and complete. I am aware that there are significant penalties for submitting false information, including the possibility of fine and imprisonment for knowing violations."

7. Availability of Reports

Except for data determined to be confidential under 327 IAC 12.1, all reports prepared in accordance with the terms of this permit shall be available for public inspection at the offices of the Indiana Department of Environmental Management and the Regional Administrator. As required by the Clean Water Act, permit applications, permits, and effluent data shall not be considered confidential.

8. Penalties for Falsification of Reports

IC 13-30 and 327 IAC 5-2-8(15) provides that any person who knowingly makes any false statement, representation, or certification in any record or other

document submitted or required to be maintained under this permit, including monitoring reports or reports of compliance or noncompliance, shall, upon conviction, be punished by a fine of not more than $10,000 per violation, or by imprisonment for not more than 180 days per violation, or by both.

9. Progress Reports

In accordance with 327 IAC 5-2-8(11)(A), reports of compliance or noncompliance with, or any progress reports on, interim and final requirements contained in any compliance schedule of this permit shall be submitted no later than fourteen (14) days following each schedule date.

10. Advance Notice for Planned Changes

In accordance with 327 IAC 5-2-8(11)(B), the permittee shall give advance notice to IDEM of any planned changes in the permitted facility, any activity, or other circumstances that the permittee has reason to believe may result in noncompliance with permit requirements.

11. Additional Requirements for POTWs and/or Treatment Works Treating Domestic Sewage

a. All POTWs shall identify, in terms of character and volume of pollutants, any significant indirect discharges into the POTW which are subject to pretreatment standards under section 307(b) and 307 (c) of the CWA.

b. All POTWs must provide adequate notice to the Commissioner of the following:

(1) Any new introduction of pollutants into the POTW from an indirect discharger that would be subject to section 301 or 306 of the CWA if it were directly discharging those pollutants.

(2) Any substantial change in the volume or character of pollutants being introduced into that POTW by any source where such change would render the source subject to pretreatment standards under section 307(b) or 307(c) of the CWA or would result in a modified application of such standards.

As used in this clause, “adequate notice” includes information on the quality and quantity of effluent introduced into the POTW, and any anticipated impact of the change on the quantity or quality of the effluent to be discharged from the POTW.

c. This permit incorporates any conditions imposed in grants made by the U.S. EPA and/or IDEM to a POTW pursuant to Sections 201 and 204 of the Clean Water Act, that are reasonably necessary for the achievement of effluent limitations required by Section 301 of the Clean Water Act.

d. This permit incorporates any requirements of Section 405 of the Clean Water Act governing the disposal of sewage sludge from POTWs or any other treatment works treating domestic sewage for any use for which rules have been established in accordance with any applicable rules.

e. POTWs must develop and submit to the Commissioner a POTW pretreatment program when required by 40 CFR 403 and 327 IAC 5-19-1, in order to assure compliance by industrial users of the POTW with applicable pretreatment standards established under Sections 307(b) and 307(c) of the Clean Water Act. The pretreatment program shall meet the criteria of 327 IAC 5-19-3 and, once approved, shall be incorporated into the POTW's NPDES permit.

12. Electronic Reporting

IDEM is currently developing the technology and infrastructure necessary to allow compliance with the EPA Phase 2 e-reporting requirements per 40 CFR 127.16 and to allow electronic reporting of applications, notices, plans, reports, and other information not covered by the federal e-reporting regulations.

IDEM will notify the permittee when IDEM's e-reporting system is ready for use for one or more applications, notices, plans, reports, or other information. This IDEM notice will identify the specific applications, notices, plans, reports, or other information that are to be submitted electronically and the permittee will be required to use the IDEM electronic reporting system to submit the identified application(s), notice(s), plan(s), report(s), or other information.

See Part I.B.3., Monthly Reporting, for the electronic reporting requirements for the monthly monitoring reports such as the Discharge Monitoring Report (DMR), Monthly Report of Operation (MRO) and Monthly Monitoring Report (MMR).

13. Trucked or Hauled Pollutants

The permittee shall prohibit the introduction of trucked or hauled pollutants into the treatment works, except under the following conditions:

a. The permittee has provided prior written permission to the person seeking to discharge the hauled or trucked pollutants into the treatment works;

b. The person seeking to discharge the hauled or trucked pollutants into the treatment works possesses a valid wastewater management permit and valid vehicle licenses, as required by IDEM;

c. The pollutants that are introduced are limited to domestic sanitary wastewaters;

(1) The introduction of trucked or hauled in industrial wastewaters into the treatment works is prohibited, unless the permittee receives approval per (2) below;

(2) The permittee must notify and receive approval of the department prior to the acceptance of the industrial wastewater in accordance with Part II.A.3, Part II.C.1 and Part II.C.10 of this permit;

d. The pollutants are introduced into the treatment works via a discharge point designated by the permittee.

14. Hauled Waste Requirements

In the event that the permittee allows the introduction of trucked or hauled pollutants under the conditions specified in item 13 above, the permittee shall:

a. Obtain and retain, for a minimum of forty-eight hours, samples that are representative of the hauled or trucked pollutants;

b. Analyze the samples obtained pursuant to item “a” above in the event that the permittee believes or has reason to believe that the hauled or trucked pollutants may be causing and/or contributing to pass-through and/or interference;

c. Maintain records, for each discharge of trucked or hauled pollutants into the treatment works, of the following:

(1) Name of the person discharging the trucked or hauled pollutants;

(2) Wastewater management permit number (if applicable) and vehicle license number and expiration date;

(3) Origination, volume, and nature of the trucked or hauled pollutants;

(4) Date and time of the discharge;

(5) Any sampling conducted; and

(6) Analytical Results, if any.

D. ADDRESSES

1. Municipal NPDES Permits Section

Indiana Department of Environmental Management
Office of Water Quality – Rm 1255
Municipal NPDES Permits Section
100 N. Senate Avenue
Indianapolis, Indiana 46204-2251

The following correspondence shall be sent to the Municipal NPDES Permits Section:

a. NPDES permit applications (new, renewal or modifications) with fee

b. Preliminary Effluent Limits request letters

c. Comment letters pertaining to draft NPDES permits

d. NPDES permit transfer of ownership requests

e. NPDES permit termination requests

f. Notifications of substantial changes to a treatment facility, including new industrial sources

g. Combined Sewer Overflow (CSO) Operational Plans

h. CSO Long Term Control Plans (LTCP)

i. Stream Reach Characterization and Evaluation Reports (SRCER)

j. Streamlined Mercury Variance Annual Reports

2. Facility Construction and Engineering Support Section

Indiana Department of Environmental Management
Office of Water Quality – Rm 1255
Facility Construction and Engineering Support Section
100 N. Senate Avenue
Indianapolis, Indiana 46204-2251

The following correspondence shall be sent to the Facility Construction and Engineering Support Section:

a. Construction permit applications with fee

3. Compliance Data Section

Indiana Department of Environmental Management
Office of Water Quality – Rm 1255
Compliance Data Section
100 N. Senate Avenue
Indianapolis, Indiana 46204-2251

The following correspondence shall be sent to the Compliance Data Section:

a. Discharge Monitoring Reports (DMRs)

b. Monthly Reports of Operation (MROs)

c. Monthly Monitoring Reports (MMRs)

d. CSO MROs

e. Gauging station and flow meter calibration documentation

f. Compliance schedule progress reports

g. Completion of Construction notifications

h. Whole Effluent Toxicity (WET) Testing reports

i. Notification of two (2) consecutive failed WETTs and the intent to begin implementation of a TRE

j. Notification of initiation of a TRE

k. TRE plans and progress reports

l. TRE final report

m. Bypass/Overflow Reports

n. Anticipated Bypass/Overflow Reports

4. Pretreatment Group

Indiana Department of Environmental Management
Office of Water Quality – Rm 1255
Compliance Data Section – Pretreatment Group
100 N. Senate Avenue
Indianapolis, Indiana 46204-2251

The following correspondence shall be sent to the Pretreatment Group:

a. Organic Pollutant Monitoring Reports

b. Significant Industrial User (SIU) Quarterly Noncompliance Reports

c. Pretreatment Program Annual Reports

d. Sewer Use Ordinances

e. Enforcement Response Plans (ERP)

f. Sludge analytical results

PART III

REQUIREMENT TO OPERATE A PRETREATMENT PROGRAM

A. CONDITIONS

The permittee, hereinafter referred to as the "Control Authority," is required to operate its approved industrial pretreatment program approved on September 28, 1984, and any subsequent modifications approved up to the issuance of this permit. To ensure the program is operated as approved and consistent with 327 IAC 5-16 through 5-21, the following conditions and reporting requirements are hereby established. The Control Authority (CA) shall:

1. Legal Authority

   The CA shall develop, enforce and maintain adequate legal authority in its Sewer Use Ordinance (SUO) to fully implement the pretreatment program in compliance with State and local law. As part of this requirement, the CA shall develop and maintain local limits as necessary to implement the prohibitions and standards in 327 IAC 5-18.

2. Permit Issuance

   In accordance with 327 IAC 5-19-3(1) the CA is required to issue/reissue permits to Significant Industrial User(s) (SIU) as stated in the SUO. The CA must issue permits to new SIUs prior to the commencement of discharge. A SIU is defined in the SUO.

3. Industrial Compliance Monitoring

   The CA is required to conduct inspection, surveillance, and monitoring activities to determine SIU compliance status with the approved program and the SUO independent of data supplied by the SIU. SIU compliance monitoring performed by the CA will be conducted in accordance with the program plan or yearly program plan. SIUs will be inspected once per year, at a minimum.

4. Enforcement

   The CA is required to initiate the appropriate enforcement action against a SIU violating any provision of the SUO and/or discharge permit in accordance with the Enforcement Response Plan (ERP) adopted by the CA. The CA must investigate violations by collecting and analyzing samples and collecting other information with sufficient care to produce evidence admissible in enforcement

proceedings or in judicial actions in accordance with 40 CFR 403.8(f)(1)(iii) and 327 IAC 5-19-3(1)(F).

5. SIU Quarterly Noncompliance Report

   The CA is required to report the compliance status of each SIU quarterly. The report is due by the 28th of the following months: April, July, October, and January of each year. The report shall include a description of corrective actions that have or will be taken by the CA and SIU to resolve the noncompliance situations. This report is to be sent to the Compliance Branch of the Office of Water Quality.

6. Public Participation and Annual Publishing of SIUs in Significant Noncompliance

   The CA is required to comply with the public participation requirements under 40 CFR 25 and 327 IAC 5-19-3(2)(L). The CA must publish annually, by January 28, in the largest daily newspaper in the area, a list of SIUs that have been in Significant Noncompliance (SNC) with the SUO during the calendar year. The CA shall include in the ANNUAL REPORT a list of the SIUs published along with the newspaper clipping.

7. Industrial User Survey

   The CA shall prepare and maintain a list of its Industrial Users meeting the criteria in 40 CFR 403.3(v)(1). The list shall identify the criteria in 40 CFR 403.3(v)(1) applicable to each Industrial User and where applicable, shall also indicate whether the CA has made a determination pursuant to 40 CFR 403.3(v)(2) that such Industrial User should not be considered a Significant Industrial User. Modifications to the list shall be submitted to the Approval Authority pursuant to 40 CFR 403.12(i)(1).

8. Annual Report

   The CA is required to submit an annual report to the Pretreatment Group and EPA Region 5 by April 1, of each year. The CA shall also include a copy of the updated industrial user survey list. The annual report will be submitted in accordance with 40 CFR 403.12(i) to the following addresses:

   Pretreatment Program Manager
   U.S. EPA Region 5, ECW-15J
   Water Enforcement and Compliance Assurance Branch
   77 W. Jackson Blvd.
   Chicago, IL 60604
   r5pretreatment@epa.gov

Indiana Department of Environmental Management
Office of Water Quality – Rm 1255
Compliance Data Section – Pretreatment Group
100 North Senate Avenue
Indianapolis, IN 46204-2251

9. Records Retention

Pursuant to 327 IAC 5-16-5.3(b), the CA shall retain any pretreatment reports from an industrial user a minimum of three (3) years and shall make such reports available for inspection and copying by IDEM or the U.S. EPA. This period of retention shall be extended during the course of any unresolved litigation regarding the discharge of pollutants by the industrial user, the operation of the POTW pretreatment program or when requested by IDEM or the U.S. EPA.

10. Confidentiality

The CA is required to comply with all confidentiality requirements set forth in 40 CFR 403.14, as well as the procedures established in the SUO.

11. Program Resources

Pursuant to 327 IAC 5-19-3(3), The CA shall maintain sufficient resources and qualified personnel to carry out the pretreatment program requirements.

12. Interjurisdictional Agreements

The CA must maintain sufficient legal authority to ensure compliance with all applicable pretreatment limits and requirements by all SIUs discharging to the POTW, including SIUs within governmental jurisdictions outside the immediate jurisdiction of the POTW. The CA must maintain the interjurisdictional agreements necessary to ensure full compliance by SIUs located within other jurisdictions as discussed in 40 CFR 403.8(f)(1).

13. POTW Pretreatment Program Revision Requirements

No later than 6 months after the effective date of this permit, the permittee shall re-evaluate its SUO to determine whether it provides adequate legal authority to fully implement the pretreatment program. Any modifications to the permittee's SUO shall be consistent with U.S. EPA's EPA Model Pretreatment Ordinance, available at: https://www3.epa.gov/npdes/pubs/pretreatment_model_suo.pdf

In addition, the re-evaluation must include a technical re-evaluation of the local limits in accordance with 40 CFR 122.44(j)(2)(ii). The CA is to conduct the local

limitations technical evaluation consistent with U.S. EPA's Local Limits Development Guidance (July 2004) document and U.S. EPA Region 5 Local Limits Spreadsheet (February 2011). The Development Guidance and the Local Limits Spreadsheet are available upon request through IDEM's Pretreatment Coordinator. The permittee shall submit the local limit re-evaluation to U.S. EPA Region 5 and IDEM Pretreatment Group for review. If any changes are deemed necessary to the SUO, the permittee shall notify the U.S. EPA Region 5 and IDEM Pretreatment Group.

14. Program Modification

Pursuant to 327 IAC 5-19-6 and 40 CFR 403.18, any significant proposed program modification shall be submitted to the Pretreatment Group and the U.S. EPA for approval. A significant modification shall include, but not be limited to, any change in the SUO, major modification in the approval program's administrative procedures, a significant reduction in monitoring procedures, a significant change in the financial/revenue system, a significant change in the local limitations contained in the SUO, and a change in the industrial user survey.

ATTACHMENT A

I. Discharge Prohibition and Reporting Requirements

Discharge from any portion of the sewer collection system, except WWTP outfall No. 001, is prohibited. If such a prohibited discharge should occur, the permittee is required to report the discharge in accordance with the provisions in Part II.C.3 of this permit.

II. CSO Operational Plan

The permittee's implementation of each of the nine minimum controls identified in EPA's National CSO Policy shall be documented in its approved CSO Operational Plan (CSOOP). The permittee shall update the CSOOP, as necessary, to reflect changes in its operation or maintenance practices; changes to measures taken to implement the nine minimum controls; and to reflect changes to the treatment plant or collection system, including changes in collection system flow characteristics, collection system or WWTP capacity or discharge characteristics (including volume, duration, frequency and pollutant concentration). All updates to the CSOOP must be submitted to IDEM, Office of Water Quality, Municipal NPDES Permits Section for approval.

CSOOP update(s) shall include a summary of the proposed revisions to the CSOOP as well as a reference to the page(s) that have been modified. CSOOP updates shall not result in a lower amount of flow being sent to and through the plant for treatment.

The permittee shall maintain a current CSO Operational Plan, including all approved updates, on file at the POTW.

III. Sewer Use Ordinance Review/Revision and Enforcement

The permittee's Sewer Use Ordinance must contain provisions which: (1) prohibit introduction of inflow sources to any sanitary sewer; (2) prohibit construction of new combined sewers outside of the existing combined sewer service area; and (3) provide that for any new building the inflow/clear water connection to a combined sewer shall be made separate and distinct from sanitary waste connection to facilitate disconnection of the former if a separate storm sewer subsequently becomes available. The permittee shall continuously enforce these provisions.

V. Sewer Use Ordinance Review/Revision and Enforcement

The permittee's Sewer Use Ordinance must contain provisions which: (1) prohibit introduction of inflow sources to any sanitary sewer; (2) prohibit construction of

new combined sewers outside of the existing combined sewer service area; and (3) provide that for any new building the inflow/clear water connection to a combined sewer shall be made separate and distinct from sanitary waste connection to facilitate disconnection of the former if a separate storm sewer subsequently becomes available. The permittee shall continuously enforce these provisions.

VI. Reopening Clauses

A. This permit may be reopened to address changes in the EPA National CSO Policy or state or federal law.
B. The permit may be reopened, after public notice and opportunity for hearing, to incorporate applicable provisions of IC 13-18.

National Pollutant Discharge Elimination System
Fact Sheet for
Bremen Wastewater Treatment Plant
Draft: February 2023
Final: TBD

Indiana Department of Environmental Management
100 North Senate Avenue
Indianapolis, Indiana 46204
(317) 232-8603
Toll Free (800) 451-6027
www.idem.IN.gov

Permittee:	Michael Leman, Council President Town of Bremen 111 South Center St. Bremen, IN 46506 mleman@mchsi.com, 574/546-4324
Existing Permit Information:	Permit Number: IN0020427 Expiration Date: June 30, 2023
Facility Contact:	Matthew Cunningham, Superintendent bremenwwtp@embarqmail.com, 574/546-3829
Facility Location:	561 N. Keyser St. Bremen, Indiana, 46506 Marshall County
Receiving Stream:	Yellow River to the Kankakee River
GLI/Non-GLI:	Non-GLI
Proposed Permit Action:	Renewal
Date Application Received:	January 3, 2023
Facility Category:	NPDES Major Municipal
CSO Project Manager:	Cara Kitchen ckitchen@idem.in.gov, 317/233-6870
Permit Writer:	Nicholas Eilerman, Senior Environmental Manager neilerma@idem.in.gov, 317/232-8619

Wastewater Treatment Plant Outfall Location

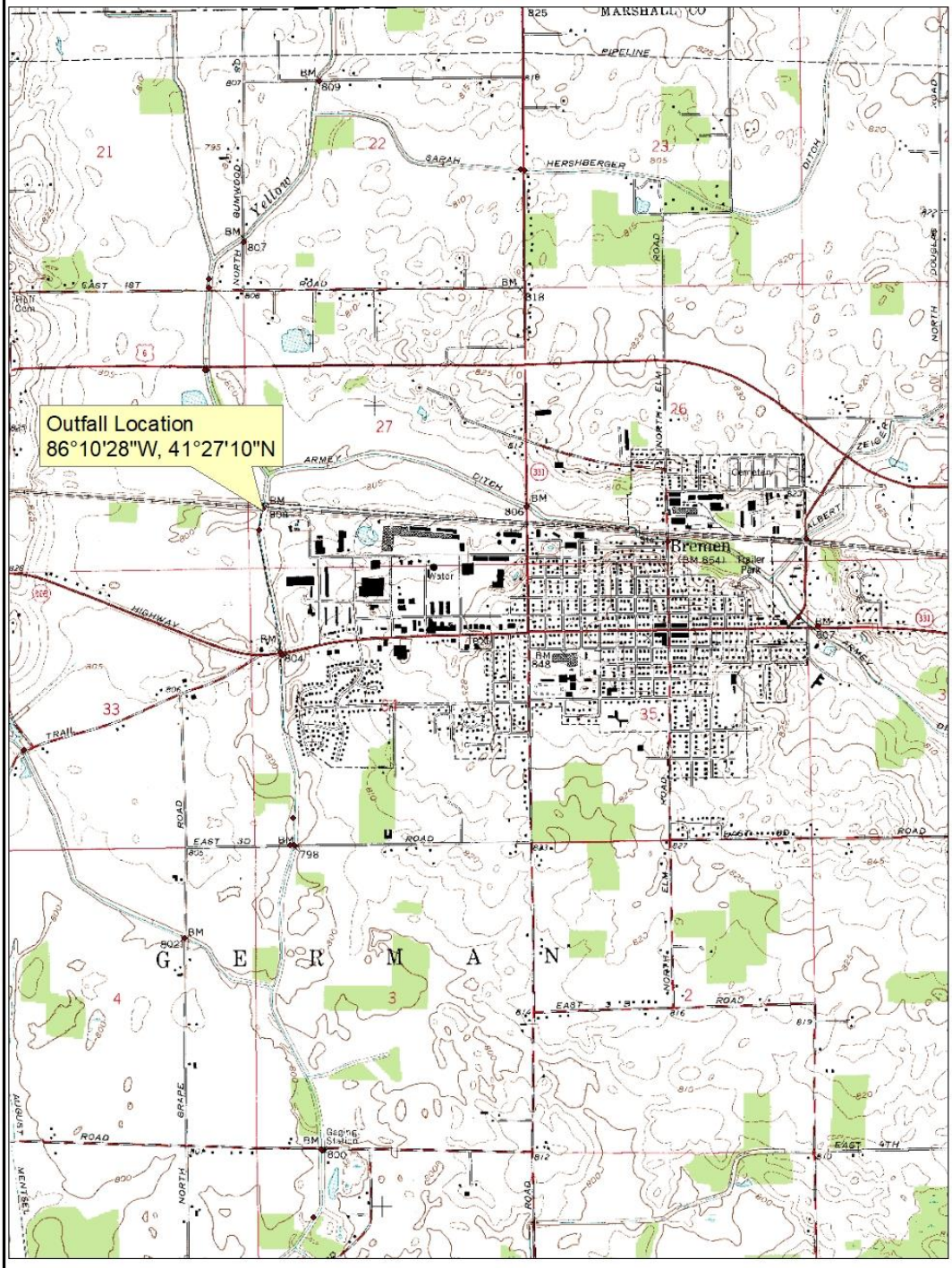

This map is intended to serve as an aid in graphic representation only. This information is not warranted for accuracy or other purposes.

Mapped By:
Nicholas Eilerman, Office of Water Quality
Date: 2/16/2023

Sources:
Non Orthophotography
Data - Obtained from the State of Indiana Geographical Information Office Library
Orthophotography - Obtained from Indiana Map Framework Data (www.indianamap.org)
Map Projection: UTM Zone 16 N **Map Datum:** NAD83

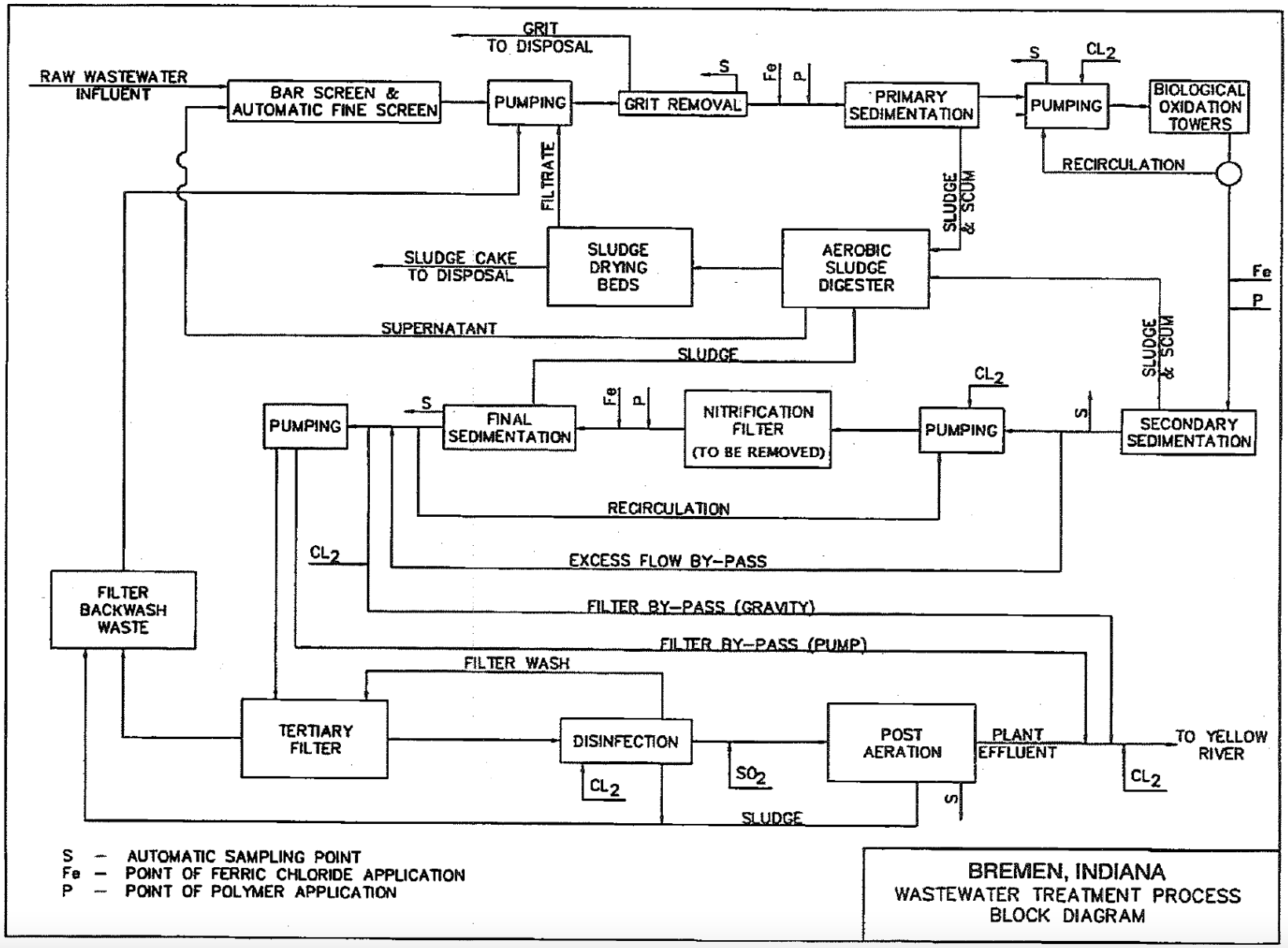
RAW WASTEWATER INFLUENT
BAR SCREEN & AUTOMATIC FINE SCREEN
PUMPING
GRIT TO DISPOSAL
GRIT REMOVAL
S
Fe
P
PRIMARY SEDIMENTATION
S
CL2
PUMPING
BIOLOGICAL OXIDATION TOWERS
RECIRCULATION
FILTRATE
SLUDGE & SCUM
SLUDGE CAKE TO DISPOSAL
SLUDGE DRYING BEDS
AEROBIC SLUDGE DIGESTER
Fe
P
SUPERNATANT
SLUDGE
SLUDGE & SCUM
CL2
PUMPING
S
FINAL SEDIMENTATION
Fe
P
NITRIFICATION FILTER (TO BE REMOVED)
PUMPING
S
SECONDARY SEDIMENTATION
RECIRCULATION
CL2
EXCESS FLOW BY-PASS
FILTER BACKWASH WASTE
FILTER BY-PASS (GRAVITY)
FILTER BY-PASS (PUMP)
FILTER WASH
TERTIARY FILTER
DISINFECTION
CL2
SO2
POST AERATION
S
PLANT EFFLUENT
CL2
TO YELLOW RIVER
SLUDGE
S — AUTOMATIC SAMPLING POINT
Fe — POINT OF FERRIC CHLORIDE APPLICATION
P — POINT OF POLYMER APPLICATION
BREMEN, INDIANA
WASTEWATER TREATMENT PROCESS
BLOCK DIAGRAM

Outfall Location	Latitude:	41° 27' 10" N
	Longitude:	86° 10' 28" W

Background

This is the proposed renewal of the NPDES permit for the Town of Bremen Wastewater Treatment Plant which was issued on June 15, 2018 and has an expiration date of June 30, 2023. The permittee submitted an application for renewal which was received on January 3, 2023. The permittee currently operates a Class III, 1.5 MGD treatment facility consisting of a fine screen, grit removal, an influent flow meter, three (3) primary settling tanks, two (2) biological oxidation towers, two (2) secondary clarifiers, a rock bed trickling filter for ammonia oxidation, a final clarifier, four (4) tertiary sand filters to enhance solids and phosphorus removal, chlorination/dechlorination facilities, a post-aeration tank, and an effluent flow meter. Sludge is treated by an aerobic digester followed by a sludge drying bed. Final sludge is hauled off-site and landfilled.

Permit Revision & Construction History

The facility has received one (1) permit modification issued February 10, 2021 to reinstate the use of their tertiary sand filters to help deal with removing solids and phosphorus at the plant.

Collection System

The collection system is comprised of combined sanitary and storm sewers. The Town of Bremen has historically identified one (1) CSO outfall within the POTW (CSO No. 002), and while the structure still physically exists there has not been an overflow from Outfall 002 since 2003. As a result of collection system separation projects the overflow gate at Outfall 002 has been locked. The collection system still contains a low percentage of combined sewers, but overflow events have been effectively eliminated. IDEM does not consider Bremen to have any active CSO outfalls. Discharges from any portion of the POTW, other than the WWTP outfall (001) are prohibited at all times. In the event of a discharge, Bremen shall report the discharge as an unauthorized discharge in accordance with the terms of this permit. This permit renewal requires Bremen to submit updates to their combined sewer operational plan, continue implementation of the plan, and enforce their Sewer Use Ordinance.

CSO Statutory or Regulatory Basis for Permit Provisions

CSOs are point sources subject to NPDES permit requirements, including both technology-based and water quality-based requirements of the CWA and state law. Thus the permit contains provisions IDEM deems necessary to meet water quality standards, as well as technology-based treatment requirements, operation and maintenance requirements, and best management practices. This permit is based on various provisions of state and federal law, including (1) Title 13 of the Indiana Code; (2) the water quality standards set forth in 327 IAC 2-1.5; (3) the NPDES rules set forth in 327 IAC 2 and 327

IAC 5, including 327 IAC 5-2-8 and 327 IAC 5-2-10; and (4) section 402(q) of the CWA (33 USC § 1342), which requires all permits or orders issued for discharges from municipal CSOs to conform with the provisions of EPA's National CSO Control Policy (58 Fed. Reg. 18688, April 19, 1994). EPA's CSO Policy contains provisions that, among other things, require permittees to develop and implement minimum technological and operational controls and long term control plans to meet state water quality standards. The permit's penalty provisions are based in large part on IC 13-30. In addition to the regulatory provisions previously cited, the data collection and reporting requirements are based in part on 327 IAC 5-1-3, 327 IAC 5-2-13 and section 402(q) of the CWA. The long term control plan provisions were included to ensure compliance with water quality standards.

Explanation of Effluent Limitations and Conditions

The effluent limitations set forth in Part II of Attachment A are derived in part from the narrative water quality standards set forth in 327 IAC 2-1-6. The narrative standards are minimum standards that apply to all waters at all times, and therefore are applicable to all discharges of pollutants. Because EPA has not issued national effluent limitation guidelines for this category of discharges, the technology-based BAT/BCT provisions are based on best professional judgment (BPJ) in addition to section 402(q) of the CWA. (CSO discharges are not subject to the secondary treatment requirements applicable to publicly owned treatment works because overflow points have been determined to not be part of the treatment plant. Montgomery Environmental Coalition v. Costle, 646 F.2d 568 (D.C. Cir. 1980).)

CSO Long Term Control Plan Requirements

The Town of Breman fully implemented their approved CSO Long Term Control Plan (LTCP) in 2008.

Spill Reporting Requirements

Reporting requirements associated with the Spill Reporting, Containment, and Response requirements of 327 IAC 2-6.1 are included in Part II.B.2.c. and Part II.C.3. of the NPDES permit. Spills from the permitted facility meeting the definition of a spill under 327 IAC 2-6.1-4(15), the applicability requirements of 327 IAC 2-6.1-1, and the Reportable Spills requirements of 327 IAC 2-6.1-5 (other than those meeting an exclusion under 327 IAC 2-6.1-3 or the criteria outlined below) are subject to the Reporting Responsibilities of 327 IAC 2-6.1-7.

It should be noted that the reporting requirements of 327 IAC 2-6.1 do not apply to those discharges or exceedances that are under the jurisdiction of an applicable permit when the substance in question is covered by the permit and death or acute injury or illness to animals or humans does not occur. In order for a discharge or exceedance to be under the jurisdiction of this NPDES permit, the substance in question (a) must have been discharged in the normal course of operation from an outfall listed in this permit, and

(b) must have been discharged from an outfall for which the permittee has authorization to discharge that substance.

Solids Disposal

The permittee is required to dispose of its sludge in accordance with 329 IAC 10, 327 IAC 6.1, or 40 CFR Part 503. Final sludge is hauled off-site and landfilled.

Receiving Stream

The facility discharges to Yellow River to Kankakee River via Outfall 001, which is located in watershed HUC-12 071200010309 and Assessment Unit INK0139_04. The receiving water has a seven day, ten year low flow ($Q_{7,10}$) of 5.4 cubic feet per second (3.5 MGD) at the outfall location. This provides a dilution ratio of receiving stream flow to treated effluent of 2.3:1.

The receiving stream is designated for full body contact recreational use and shall be capable of supporting a well-balanced warm water aquatic community in accordance with 327 IAC 2-1.

The receiving stream reach (INK0139_02) has not been listed on Indiana's 2022 303(d) list for any parameters. However, the receiving stream and the facility have been incorporated into the Kankakee/Iroquois River Watershed Total Maximum Daily Load (TMDL), which addresses *E. coli* impairment. This TMDL was approved by EPA on September 29, 2009. The NPDES permit contains effluent limitations for *E. coli* to address the impairment.

Industrial Contributions

The permittee accepts industrial flow from Universal Bearings, Inc., Bremen Castings, Inc., Digger Specialties, Inc., and RPC Precision Products, . Based on the industrial flow received by the treatment facility, the permittee is required to operate its approved industrial pretreatment program approved on September 29, 1984. Provisions for the industrial pretreatment program are included in Part III of this permit renewal. In addition, monitoring requirements for cadmium, chromium, copper, cyanide, lead, and zinc are being included in the permit renewal, as well as twice annual Whole Effluent Toxicity Testing (WETT).

Antidegradation

Indiana's Antidegradation Standards and Implementation procedures are outlined in 327 IAC 2-1.3. The antidegradation standards established by 327 IAC 2-1.3-3 apply to all surface waters of the state. The permittee is prohibited from undertaking any deliberate action that would result in a new or increased discharge of a bioaccumulative chemical of concern (BCC) or a new or increased permit limit for a regulated pollutant that is not a BCC unless information is submitted to the commissioner demonstrating that the proposed new or increased discharge will not cause a significant lowering of water quality, or an

antidegradation demonstration submitted and approved in accordance 327 IAC 2-1.3-5 and 2-1.3-6.

The NPDES permit does not propose to establish a new or increased loading of a regulated pollutant; therefore, the Antidegradation Implementation Procedures in 327 IAC 2-1.3-5 and 2-1.3-6 do not apply to the permitted discharge.

Effluent Limitations and Rationale

The effluent limitations proposed herein are based on Indiana Water Quality Standards, NPDES regulations, Indiana Stream Pollution Control Board Wastewater Treatment Guidelines and Wasteload Allocation (WLA) analyses performed by this Office's Permits Branch staff on February 29, 2008, November 15, 2000 and January 26, 2023. These limits are in accordance with antibacksliding regulations specified in 327 IAC 5-2-10(a)(11)(A).

Monitoring frequencies are based upon facility size and type. The reduced monitoring frequency of three (3) times weekly for $CBOD_5$, TSS, and ammonia-nitrogen is being retained in this permit based on the permittee's continued compliance with effluent limitations for these parameters.

IDEM has waived the 85% removal requirement for $CBOD_5$ and TSS under the provisions of 40 CFR 133.103(a). The periodic improvements required under the permittee's LTCP would make the percent removal level a dynamic measurement and any limitation based on percent removal impractical.

The final effluent parameters to be limited and/or monitored include: Flow, Carbonaceous Biochemical Oxygen Demand ($CBOD_5$), Total Suspended Solids (TSS), Ammonia-nitrogen (NH_3-N), total phosphorus, total nitrogen, pH, Dissolved Oxygen (DO), Total Residual Chlorine (TRC), *Escherichia coli* (*E. coli)*, cadmium, chromium, copper, cyanide, lead, and zinc.

Final Effluent Limitations

The summer monitoring period runs from May 1 through November 30 of each year and the winter monitoring period runs from December 1 through April 30 of each year. The disinfection season runs from April 1 through October 31 of each year.

The mass limits for $CBOD_5$, TSS and ammonia-nitrogen have been calculated utilizing the peak design flow of 2.5 MGD. This is to facilitate the maximization of flow through the treatment facility in accordance with this Office's CSO policy.

Influent Monitoring

The raw influent and the wastewater from intermediate unit treatment processes, as well as the final effluent shall be sampled and analyzed for the pollutants and operational parameters specified by the applicable Monthly Report of Operation Form, as appropriate, in accordance with 327 IAC 5-2-13 and Part I.B.2 of the permit. Except where the permit specifically states otherwise, the sample frequency for the raw influent and intermediate unit treatment process shall be at a minimum the same frequency as that for the final effluent. The measurement frequencies specified in each of the tables in Part I.A. are the minimum frequencies required by the permit.

Flow

Flow is to be measured five (5) times weekly as a 24-hour total. Reporting of flow is required by 327 IAC 5-2-13.

$CBOD_5$

$CBOD_5$ is limited to 10 mg/l (209 lbs/day) as a monthly average and 15 mg/l (313 lbs/day) as a weekly average during the summer monitoring period. During the winter monitoring period, $CBOD_5$ is limited to 15 mg/l (313 lbs/day) as a monthly average and 23 mg/l (480 lbs/day) as a weekly average.

Monitoring is to be conducted three (3) times weekly by 24-hour composite sampling. The $CBOD_5$ concentration limitations included in this permit are water quality-based effluent limitations set in accordance with the Indiana Stream Pollution Board's Wastewater Treatment guidelines and are the same as the concentration limitations found in the facility's previous permit.

TSS

TSS is limited to 10 mg/l (209 lbs/day) as a monthly average and 15 mg/l (313 lbs/day) as a weekly average during the summer monitoring period. During the winter monitoring period, TSS is limited to 30 mg/l (626 lbs/day) as a monthly average and 45 mg/l (939 lbs/day) as a weekly average.

Monitoring is to be conducted three (3) times weekly by 24-hour composite sampling. The TSS concentration limitations included in this permit are calculated from the water-quality based effluent limitations for $CBOD_5$ set in accordance with the Indiana Stream Pollution Board's Wastewater Treatment guidelines and are the same as the concentration limitations found in the facility's previous permit.

Ammonia-nitrogen

Ammonia-nitrogen is limited to 3.1 mg/l (65 lbs/day) as a monthly average and 4.7 mg/l (98 lbs/day) as a weekly average during the summer monitoring period. During the winter monitoring period, ammonia-nitrogen is limited to 5.0 mg/l (104 lbs/day) as a monthly average and 7.5 mg/l (156 lbs/day) as a weekly average.

Monitoring is to be conducted three (3) times weekly by 24-hour composite sampling. The ammonia-nitrogen concentration limitations included in this permit are water quality-based effluent limitations set in accordance with the WLA analyses performed by this Office's Permits Branch staff on February 29, 2008 for the summer limitations and November 15 2000 for winter limitations and are the same as the concentration limitations found in the facility's previous permit.

Total Phosphorus

Excessive phosphorus in the discharge from wastewater treatment plants can result in harmful algal blooms that negatively impact fish habitat, cause fish kills, lower dissolved oxygen, and pose public health concerns related to increased exposure to toxic microbes. The effects of nutrient pollution can be observed both in local waters as well as downstream waters. IDEM has calculated that sanitary wastewater treatment plants with average design flows greater than or equal to 1 MGD constitute a significant percentage of the total load of phosphorus discharged to Indiana's waterways from sanitary wastewater treatment plants.

Consistent with IDEM's current Nonrule policy (WATER-019-NPD) which applies phosphorus reduction requirements to POTWs with average design flows greater than or equal to 1 MGD, monitoring requirements and an effluent limitation for total phosphorus have been included in the permit renewal. Total phosphorus is limited to 1.0 mg/l as a monthly average. Monitoring is to be conducted three (3) by 24-hour composite sampling.

Total Nitrogen

Nutrient pollution is one of our Nation's top environmental challenges and considerations for addressing it continue to be a priority for IDEM. Nutrient pollution can lead to public health issues and impacts the economy and is of particular concern with regard to harmful algal blooms in the State of Indiana and harmful algal blooms and hypoxia problems in further downstream waters. Of particular concern in further downstream waters is the loadings of the nutrient nitrogen.

In response to the nutrient pollution concerns, the U.S. EPA released a memorandum on September 22, 2016 entitled "Renewed Call to Action to Reduce Nutrient Pollution and Support Incremental Actions to Protect Water Quality and Public Health", which can be found at the following web address: https://www.epa.gov/sites/production/files/2016-09/documents/renewed-call-nutrient-memo-2016.pdf. EPA recommends all major sanitary

dischargers begin monitoring for total nitrogen. To begin the process of total nitrogen data collection, IDEM is proposing that all major sanitary dischargers with average design flow ratings of 1.0 MGD or greater begin monitoring for total nitrogen.

The permit requires that total nitrogen be monitored and report at a minimum of one (1) time monthly. Both the concentration and associated loading values must be reported. Total nitrogen shall be determined by testing for Total Kjeldahl Nitrogen (TKN) and Nitrate + Nitrite Nitrogen and reporting the sum of the TKN and Nitrate + Nitrite results (reported as N). Nitrate + Nitrite can be analyzed together or separately.

pH

The pH limitations have been based on 40 CFR 133.102 which is cross-referenced in 327 IAC 5-5-3.

To ensure conditions necessary for the maintenance of a well-balanced aquatic community, the pH of the final effluent must be between 6.0 and 9.0 standard units in accordance with provisions in 327 IAC 2-1-6(b)(2).

pH must be measured five (5) times weekly by grab sampling. These pH limitations are the same as the limitations found in the facility's previous permit.

Dissolved Oxygen

Dissolved oxygen shall not fall below 7.0 mg/l as a daily minimum average during the summer monitoring period. During the winter monitoring period, dissolved oxygen shall not fall below 5.0 mg/l as a daily minimum average.

These dissolved oxygen limitations are water quality-based effluent limitations set in accordance with Indiana Stream Pollution Board's Wastewater Treatment Guidelines for summer limitations and the WLA analysis performed by this Office's Permits Branch staff on February 29, 2008 for winter limitations and are the same as the concentration limitations found in the facility's previous permit.

Dissolved oxygen measurements must be based on the average of four (4) grab samples taken within a 24-hr. period. This monitoring is to be conducted five (5) times weekly.

Total Residual Chlorine

Disinfection of the effluent is required from April 1 through October 31, annually.

Effluent dechlorination will be required in order to protect aquatic life. In accordance with Indiana Water Quality Standards, the final effluent limits (end-of-pipe) for TRC are 0.02 mg/l monthly average and 0.04 mg/l daily maximum. Compliance will be demonstrated if the observed effluent concentrations are less than the limit of quantitation (0.06 mg/l).

Disinfection requirements are established in 327 IAC 5-10-6. This monitoring is to be conducted five (5) times weekly by grab sampling.

E. coli

The *E. coli* limitations and monitoring requirements apply from April 1 through October 31, annually. *E. coli* is limited to 125 count/100 ml as a monthly average, and 235 count/100 ml as a daily maximum. The monthly average *E. coli* value shall be calculated as a geometric mean. This monitoring is to be conducted three (3) times weekly by grab sampling. These *E. coli* limitations are set in accordance with regulations specified in 327 IAC 5-10-6.

Metals/Non-conventional Pollutants

Effluent chromium and zinc data was evaluated as part of the NPDES permit renewal. The evaluation of the monitoring data revealed that the discharge from the wastewater treatment plant did not show potential to exceed the water quality criterion for chromium and zinc within the receiving waters. However, due to the amount of industrial contributions to the Town of Bremen collection system, monitoring requirements are being retained. Cadmium, copper, lead, and cyanide show a potential to exceed during preliminary screening, therefore a Reasonable Potential Evaluation (RPE) was conducted.

Reasonable Potential Evaluations (RPEs) were performed in conjunction with the Wasteload Allocation Analysis performed by this Office's Permits Branch staff on January 26, 2023. In reviewing the RPE, the Projected Effluent Quality (PEQ) for cadmium, copper, lead, mercury, and cyanide is less than the Projected Effluent Limitations (PELs). Therefore, effluent limitations have been removed for copper and mercury. However, due to the industrial contributors to the Town of Bremen collection system, monitoring requirements for these metals are being retained.

Mercury's monitoring requirements are being removed from the permit since the industrial users primary pollutants do not contain a source of mercury and the sampling data has show nno potential to exceed the water quality criteria.

Due to the amount of industrial contribution received by the treatment facility, the effluent shall be monitored quarterly for cadmium, chromium, copper, cyanide, lead, and zinc utilizing 24-Hr. composite sampling (grab for cyanide) for the term of the permit.

In addition to effluent monitoring and limitations, the permittee is required to monitor the influent wastestream for cadmium, chromium, copper, lead, and zinc at a frequency of quarterly utilizing 24-Hr. composite sampling. Cyanide will be monitored at a frequency of quarterly utilizing grab sampling.

Whole Effluent Toxicity Testing

The permittee submitted a Whole Effluent Toxicity Tests (WETT) with the renewal application as required in 327 IAC 5-2-3(g). The WETT results showed no indications of toxicity. The permittee shall conduct the WETT described in Part I.D. of the permit to monitor the toxicity of the discharge from Outfall 001. This toxicity testing is to be performed at the time of permit renewal.

The permittee shall conduct the whole effluent toxicity tests described in Part I.D. of the permit to monitor the toxicity of the discharge from Outfall 001. This toxicity testing is to be performed biannually for the duration of this NPDES permit. Acute toxicity will be demonstrated if the effluent is observed to have exceeded **1.0** TU_a(acute toxic units) based on 100% effluent for the test organism in 48 and 96 hours for *Ceriodaphnia dubia* or *Pimephales promelas*, which ever is more sensitive. Chronic toxicity will be demonstrated if the effluent is observed to have exceeded **1.6** TU_c (chronic toxic units) for *Ceriodaphnia dubia* or *Pimephales promelas*. If acute or chronic toxicity is found in any of the tests specified above, another toxicity test using the specified methodology and same test species shall be conducted within two weeks. If any two tests indicate the presence of toxicity, the permittee must begin the implementation of a toxicity reduction evaluation (TRE) as is described in Part I.D.2. of the permit.

Backsliding

None of the concentration limits included in this permit conflict with antibacksliding regulations found in 327 IAC 5-2-10(a)(11)(A), therefore, backsliding is not an issue.

Reopening Clauses

Nine (9) reopening clauses were incorporated into the permit in Part I.C. One clause is to incorporate effluent limits from any further wasteload allocations performed; a second clause is to allow for changes in the sludge disposal standards; a third clause is to incorporate any applicable effluent limitation or standard issued or approved under section 301(b)(2)(C), (D) and (E), 304(b)(2), and 307(a)(2) of the Clean Water Act; a fourth clause is to include whole effluent toxicity limitations or to include limitations for specific toxicants, a fifth clause to include a case-specific Method Detection Level (MDL); a sixth clause is to incorporate monitoring requirements and effluent limitations for cadmium, chromium, copper, cyanide, lead, and/or zinc; a seventh clause is to incorporate additional requirements or limitations for specific toxicants if the required additional analyses in Part I.A. indicate that such additional requirements and/or limitations are necessary; an eighth clause is to address changes in the EPA National CSO Policy or state or federal law; and a ninth clause is to incorporate applicable provisions of IC 13-18.

Compliance Status

The permittee has no enforcement actions at the time of this permit preparation.

Expiration Date

A five-year NPDES permit is proposed.

Permit Processing/Public Comment

Pursuant to IC 13-15-5-1, IDEM will publish the draft permit document online at https://www.in.gov/idem/public-notices/. Additional information on public participation can be found in the "Citizens' Guide to IDEM", available at https://www.in.gov/idem/resources/citizens-guide-to-idem/. A 30-day comment period is available to solicit input from interested parties, including the public.