STATE OF INDIANA
DEPARTMENT OF ENVIRONMENTAL MANAGEMENT
PUBLIC NOTICE NO. 20220407 – IN0022896 – D
DATE OF NOTICE: APRIL 7, 2022
DATE RESPONSE DUE: MAY 9, 2022

The Office of Water Quality proposes the following NPDES DRAFT PERMIT:

MINOR – RENEWAL

FORT BRANCH (town) WWTP, Permit No. IN0022896, GIBSON COUNTY, 823 West 800 South, Fort Branch, IN. This minor municipal facility discharges 0.7 million gallons daily of treated sanitary wastewater into the West Fork Pigeon Creek via Outfall 001, located at GPS coordinates 38° 14' 15" N, 87° 34' 56" W. Final solids are hauled away for disposal. Permit Manager: John Donnellan, 317/234-0865, jdonnell@idem.in.gov. Posted online at https://www.in.gov/idem/public-notices/.

PROCEDURES TO FILE A RESPONSE

Draft can be viewed or copied (10¢ per page) at IDEM/OWQ NPDES PS, 100 North Senate Avenue, (Rm 1203) Indianapolis, IN, 46204 (east end elevators) from 9 – 4, Mon - Fri, (except state holidays). A copy of the Draft Permit is on file at the local County Health Department. Please tell others you think would be interested in this matter. For your rights & responsibilities see these sites: Public Notices: https://www.in.gov/idem/public-notices/; Citizen Guide: https://www.in.gov/idem/resources/citizens-guide-to-idem/. Please tell others whom you think would be interested in this matter.

Response Comments: The proposed decision to issue a permit is tentative. Interested persons are invited to submit written comments on the Draft permit. All comments must be postmarked no later than the Response Date noted to be considered in the decision to issue a Final permit. Deliver or mail all requests or comments to the attention of the Permit Writer at the above address, (mail code 65-42 PS).

To Request a Public Hearing:
Any person may request a Public Hearing. A written request must be submitted to the above address on or before the Response Date noted. The written request shall include: the name and address of the person making the request, the interest of the person making the request, persons represented by the person making the request, the reason for the request and the issues proposed for consideration at the Hearing. IDEM will determine whether to hold a Public Hearing based on the comments and the rationale for the request. Public Notice of such a Hearing will be published in at least one newspaper in the geographical area of the discharge and sent to anyone submitting written comments and/or making such request and whose name is on the mailing list at least 30 days prior to the Hearing.

INDIANA DEPARTMENT OF ENVIRONMENTAL MANAGEMENT
We Protect Hoosiers and Our Environment.
100 N. Senate Avenue • Indianapolis, IN 46204
(800) 451-6027 • (317) 232-8603 • www.idem.IN.gov

Eric J. Holcomb
Governor

Brian C. Rockensuess
Commissioner

April 7, 2022

VIA ELECTRONIC MAIL

Ms. Sandy Birch, President
Town Council of Fort Branch
603 South Hillcrest Street
Fort Branch, Indiana 47648

Dear Ms. Birch:

Re: Draft NPDES Permit No. IN0022896
Town of Fort Branch Wastewater Treatment Plant
Gibson County

Your application and supporting documents have been reviewed and processed in accordance with rules adopted under 327 IAC 5. Enclosed is draft NPDES Permit No. IN0022896 which applies to the discharge from the Town of Fort Branch Wastewater Treatment Plant.

Pursuant to IC 13-15-5-1, IDEM will publish the draft permit document online at https://www.in.gov/idem/public-notices/. Additional information on public participation can be found in the "Citizens' Guide to IDEM", available at https://www.in.gov/idem/resources/citizens-guide-to-idem/. A 30-day comment period is available to solicit input from interested parties, including the general public.

Please review this document carefully and become familiar with the proposed terms and conditions. Comments concerning the draft permit should be submitted in accordance with the procedure outlined in the enclosed public notice form. Questions concerning this draft permit may be addressed to John Donnellan at 317/234-0865 or jdonnell@idem.IN.gov.

Sincerely,

Leigh Voss

Leigh Voss, Chief
Municipal NPDES Permits Section
Office of Water Quality

Enclosures
cc: Bryan Will, Certified Operator
Brett Lemmons
Eric M. Smith

STATE OF INDIANA

DEPARTMENT OF ENVIRONMENTAL MANAGEMENT

AUTHORIZATION TO DISCHARGE UNDER THE

NATIONAL POLLUTANT DISCHARGE ELIMINATION SYSTEM

In compliance with the provisions of the Federal Water Pollution Control Act, as amended, (33 U.S.C. 1251 et seq., the "Clean Water Act") or (CWA), and IDEMs authority under IC 13-5, the Indiana Department of Environmental Management (IDEM) is issuing this permit to the

TOWN OF FORT BRANCH

hereinafter referred to as "the permittee." The permittee owns and/or operates the **Town of Fort Branch Wastewater Treatment Plant**, a minor municipal wastewater treatment plant located at 823 West 800 South, Fort Branch, Indiana, Gibson County. The permittee is hereby authorized to discharge from the outfalls identified in Part I of this permit to receiving waters named the West Fork Pigeon Creek in accordance with the effluent limitations, monitoring requirements, and other conditions set forth in the permit. This permit may be revoked for the nonpayment of applicable fees in accordance with IC 13-18-20.

Effective Date: _____.

Expiration Date: _____.

In order to receive authorization to discharge beyond the date of expiration, the permittee shall submit such information and application forms as are required by the Indiana Department of Environmental Management. The application shall be submitted to IDEM at least 180 days prior to the expiration date of this permit, unless a later date is allowed by the Commissioner in accordance with 327 IAC 5-3-2 and Part II.A.4 of this permit.

Issued on _____, for the Indiana Department of Environmental Management.

Leigh Voss, Chief
Municipal NPDES Permits Section
Office of Water Quality

TREATMENT FACILITY DESCRIPTION

The permittee currently operates a Class II, 0.7 MGD activated sludge oxidation ditch treatment facility consisting of a flow equalization basin, a macerator, an auger, grit removal, a wet well, two (2) oxidation ditches, two (2) clarifiers, chlorination/dechlorination disinfection facilities, post aeration, and flow measurement. Sludge is treated in an aerobic digester and is dewatered in drying beds. Final sludge is landfilled.

The collection system is comprised of 100% separate sanitary sewers by design with no overflow or bypass points.

PART I

A. EFFLUENT LIMITATIONS AND MONITORING REQUIREMENTS

The permittee is authorized to discharge from the outfall listed below in accordance with the terms and conditions of this permit. The permittee shall take samples and measurements at a location representative of each discharge to determine whether the effluent limitations have been met. Refer to Part I.B of this permit for additional monitoring and reporting requirements.

1. Beginning on the effective date of this permit, the permittee is authorized to discharge from Outfall 001, which is located at Latitude: 38° 14' 15" N, Longitude: 87° 34' 56" W. The discharge is subject to the following requirements:

TABLE 1

	Quantity or Loading			**Quality or Concentration**			**Monitoring Requirements**	
Parameter	**Monthly Average**	**Weekly Average**	**Units**	**Monthly Average**	**Weekly Average**	**Units**	**Measurement Frequency**	**Sample Type**
Flow [1]	Report	----	MGD	----	----	----	5 X Weekly	24-Hr. Total
$CBOD_5$								
Summer [2]	96.4	144.3	lbs/day	16.5	24.7	mg/l	3 X Weekly	24-Hr. Comp.
Winter [3]	146.0	233.7	lbs/day	25	40	mg/l	3 X Weekly	24-Hr. Comp.
TSS								
Summer [2]	116.8	175.2	lbs/day	20	30	mg/l	3 X Weekly	24-Hr. Comp.
Winter [3]	175.2	262.9	lbs/day	30	45	mg/l	3 X Weekly	24-Hr. Comp.
Ammonia-nitrogen								
Summer [2]	6.4	9.3	lbs/day	1.1	1.6	mg/l	3 X Weekly	24-Hr. Comp.
Winter [3]	9.3	14.0	lbs/day	1.6	2.4	mg/l	3 X Weekly	24-Hr. Comp.

TABLE 2

	Quality or Concentration				Monitoring Requirements	
Parameter	**Daily Minimum**	**Monthly Average**	**Daily Maximum**	**Units**	**Measurement Frequency**	**Sample Type**
pH [4]	6.0	----	9.0	s.u.	5 X Weekly	Grab
Dissolved Oxygen [5]						
Summer [2]	6.0	----	----	mg/l	5 X Weekly	3 Grabs/24-Hrs.
Winter [3]	5.0	----	----	mg/l	5 X Weekly	3 Grabs/24-Hrs.
Total Residual Chlorine [6]						
Contact Tank [7]	0.5	----	Report	mg/l	5 X Weekly	Grab
Final effluent [8]	----	0.01	0.02	mg/l	5 X Weekly	Grab
E.coli [9]	----	125 [10]	235 [11]	cfu/100 ml	3 X Weekly	Grab

[1] Effluent flow measurement is required per 327 IAC 5-2-13. The flow meter(s) shall be calibrated at least once every twelve months.

[2] Summer limitations apply from May 1 through November 30 of each year.

[3] Winter limitations apply from December 1 through April 30 of each year.

[4] If the permittee collects more than one grab sample on a given day for pH, the values shall not be averaged for reporting daily maximums or daily minimums. The permittee must report the individual minimum and the individual maximum pH value of any sample during the month on the Monthly Report of Operation forms.

[5] The daily minimum concentration of dissolved oxygen in the effluent shall be reported as the arithmetic mean determined by summation of the three (3) daily grab sample results divided by the number of daily grab samples. These samples are to be collected over equal time intervals.

[6] The effluent shall be disinfected on a continuous basis such that violations of the applicable bacteriological limitations (*E. coli*) do not occur from April 1 through October 31, annually. If the permittee uses chlorine for any reason, at any time including the period from November 1 through March 31, then the limits and monitoring requirements in Table 2 for Total Residual Chlorine (TRC) shall be in effect whenever chlorine is used.

[7] The chlorine residual shall be maintained at a concentration not less than 0.5 mg/l as measured at the effluent end of the chlorine contact tank for the term of the permit. The daily maximum chlorine residual value at the chlorine contact tank shall also be reported.

[8] In accordance with 327 IAC 5 2 11.1(f), compliance with this permit will be demonstrated if the measured effluent concentrations are less than the limit of quantitation (0.06 mg/l). If the measured effluent concentrations are above the water quality-based permit limitations and above the Limit of Detection (LOD) specified by the permit in any of three (3) consecutive analyses or any five (5) out of nine (9) analyses, the permittee is required to reevaluate its chlorination/dechlorination practices to make any necessary changes to assure compliance with the permit limitation for TRC. These records must be retained in accordance with the record retention requirements of Part I.B.8 of this permit.

Effluent concentrations greater than or equal to the LOD but less than the Limit of Quantitation (LOQ), shall be reported on the discharge monitoring report forms as the measured value. A note must be included with the DMR indicating that the value is not quantifiable. Effluent concentrations less than the limit of detection shall be reported on the discharge monitoring report forms as less than the value of the limit of detection. For example, if a substance is not detected at a concentration of 0.01 mg/l, report the value as < 0.01 mg/l. At present, two methods are considered to be acceptable to IDEM, amperometric and DPD colorimetric methods, for chlorine concentrations at the level of 0.06 mg/l.

Parameter	LOD	LOQ
Chlorine	0.02 mg/l	0.06 mg/l

Case-Specific MDL

The permittee may determine a case-specific Method Detection Level (MDL) using one of the analytical methods specified above, or any other test method which is approved by IDEM prior to use. The MDL shall be derived by the procedure specified for MDLs contained in 40 CFR Part 136, Appendix B, and the limit of quantitation shall be set equal to 3.18 times the MDL. Other methods may be used if first approved by the U.S. EPA and IDEM.

[9] The *Escherichia coli* (*E. coli*) limitations apply from April 1 through October 31 annually.

[10] The monthly average *E. coli* value shall be calculated as a geometric mean. Per 327 IAC 5-10-6, the concentration of *E. coli* shall not exceed one hundred twenty-five (125) cfu or mpn per 100 milliliters as a geometric mean of the effluent samples taken in a calendar month. No samples may be excluded when calculating the monthly geometric mean.

[11] If less than ten samples are taken and analyzed for *E. coli* in a calendar month, no samples may exceed two hundred thirty-five (235) cfu or mpn as a daily maximum. However, when ten (10) or more samples are taken and analyzed for *E. coli* in a calendar month, not more than ten percent (10%) of those samples may exceed two hundred thirty-five (235) cfu or mpn as a daily maximum. When calculating ten percent, the result must not be rounded up. In reporting for compliance purposes on the Discharge Monitoring Report (DMR) form, the permittee shall record the highest non-excluded value for the daily maximum.

2. Minimum Narrative Limitations

At all times the discharge from any and all point sources specified within this permit shall not cause receiving waters:

a. including waters within the mixing zone, to contain substances, materials, floating debris, oil, scum attributable to municipal, industrial, agricultural, and other land use practices, or other discharges that do any of the following:

(1) will settle to form putrescent or otherwise objectionable deposits;

(2) are in amounts sufficient to be unsightly or deleterious;

(3) produce color, visible oil sheen, odor, or other conditions in such degree as to create a nuisance;

(4) are in amounts sufficient to be acutely toxic to, or to otherwise severely injure or kill aquatic life, other animals, plants, or humans;

(5) are in concentrations or combinations that will cause or contribute to the growth of aquatic plants or algae to such a degree as to create a nuisance, be unsightly, or otherwise impair the designated uses.

b. outside the mixing zone, to contain substances in concentrations that on the basis of available scientific data are believed to be sufficient to injure, be chronically toxic to, or be carcinogenic, mutagenic, or teratogenic to humans, animals, aquatic life, or plants.

B. MONITORING AND REPORTING

1. Representative Sampling

Samples and measurements taken as required herein shall be representative of the volume and nature of the monitored discharge flow and shall be taken at times which reflect the full range and concentration of effluent parameters

normally expected to be present. Samples shall not be taken at times to avoid showing elevated levels of any parameters.

2. Data on Plant Operation

The raw influent and the wastewater from intermediate unit treatment processes, as well as the final effluent shall be sampled and analyzed for the pollutants and operational parameters specified by the applicable Monthly Report of Operation Form, as appropriate, in accordance with 327 IAC 5-2-13. Except where the permit specifically states otherwise, the sample frequency for the raw influent and intermediate unit treatment process shall be at a minimum the same frequency as that for the final effluent. The measurement frequencies specified in each of the tables in Part I.A. are the minimum frequencies required by this permit.

For publicly owned treatment works, the 30-day average percent removal for Carbonaceous Biochemical Oxygen Demand ($CBOD_5$) and Total Suspended Solids shall not be less than 85 percent unless otherwise authorized by the permitting authority in accordance with 40 CFR Part 133.102, as incorporated by reference in 327 IAC 5-2-1.5. The permittee must monitor the influent and effluent $CBOD_5$ and TSS at least once per month and calculate the percent removal to ensure compliance with the required 85 percent removal. This information must be maintained on site and provided to this Office's staff upon request.

3. Reporting per Monitoring Period

The permittee shall submit accurate monitoring reports to the Indiana Department of Environmental Management containing results obtained during each monitoring period and shall be submitted no later than the 28th day of the month following each completed monitoring period. Each monitoring period report shall be submitted no less than annually and no more than monthly, as per parameter measurement frequency listed. These reports shall include, but not necessarily be limited to, the Discharge Monitoring Report (DMR) and the Monthly Report of Operation (MRO). All reports shall be submitted electronically by using the NetDMR application, upon registration, receipt of the NetDMR Subscriber Agreement, and IDEM approval of the proposed NetDMR Signatory. Access the NetDMR website (for initial registration and DMR/MMR submittal) via CDX at: https://cdx.epa.gov/. The Regional Administrator may request the permittee to submit monitoring reports to the Environmental Protection Agency if it is deemed necessary to assure compliance with the permit.

A calendar week will begin on Sunday and end on Saturday. Partial weeks consisting of four or more days at the end of any month will include the remaining days of the week, which occur in the following month in order to calculate a consecutive seven-day average. This value will be reported as a weekly average

or seven-day average on the MRO for the month containing the partial week of four or more days. Partial calendar weeks consisting of less than four days at the end of any month will be carried forward to the succeeding month and reported as a weekly average or a seven-day average for the calendar week that ends with the first Saturday of that month.

4. Definitions

a. Calculation of Averages

Pursuant to 327 IAC 5-2-11(a)(5), the calculation of the average of discharge data shall be determined as follows: For all parameters except fecal coliform and *E. coli*, calculations that require averaging of sample analyses or measurements of daily discharges shall use an arithmetic mean unless otherwise specified in this permit. For fecal coliform, the monthly average discharge and weekly average discharge, as concentrations, shall be calculated as a geometric mean. For *E. coli*, the monthly average discharge, as a concentration, shall be calculated as a geometric mean.

b. Terms

(1) “Monthly Average” -The monthly average discharge means the total mass or flow-weighted concentration of all daily discharges during a calendar month on which daily discharges are sampled or measured, divided by the number of daily discharges sampled and/or measured during such calendar month. The monthly average discharge limitation is the highest allowable average monthly discharge for any calendar month.

(2) “Weekly Average” - The weekly average discharge means the total mass or flow weighted concentration of all daily discharges during any calendar week for which daily discharges are sampled or measured, divided by the number of daily discharges sampled and/or measured during such calendar week. The average weekly discharge limitation is the maximum allowable average weekly discharge for any calendar week.

(3) “Daily Maximum” - The daily maximum discharge limitation is the maximum allowable daily discharge for any calendar day. The “daily discharge” means the total mass of a pollutant discharged during the calendar day or, in the case of a pollutant limited in terms other than mass pursuant to 327 IAC 5-2-11(e), the average concentration or other measurement of the pollutant specified over the calendar day or any twenty-four hour period that represents the calendar day for purposes of sampling.

(4) "24-hour Composite" - A 24-hour composite sample consists of at least three (3) individual flow-proportioned samples of wastewater, taken by the grab sample method over equal time intervals during the period of operator attendance or by an automatic sampler, and which are combined prior to analysis. A flow proportioned composite sample shall be obtained by:

(a) recording the discharge flow rate at the time each individual sample is taken,

(b) adding together the discharge flow rates recorded from each individual sampling time to formulate the "total flow value,"

(c) dividing the discharge flow rate of each individual sampling time by the total flow value to determine its percentage of the total flow value, and

(d) multiplying the volume of the total composite sample by each individual sample's percentage to determine the volume of that individual sample which will be included in the total composite sample.

Alternatively, a 24-hour composite sample may be obtained by an automatic sampler on an equal time interval basis over a twenty-four hour period provided that a minimum of 24 samples are taken and combined prior to analysis. The samples do not need to be flow-proportioned if the permittee collects samples in this manner.

(5) $CBOD_5$: Five-day Carbonaceous Biochemical Oxygen Demand

(6) TSS: Total Suspended Solids

(7) *E. coli*: *Escherichia coli* bacteria

(8) The "Regional Administrator" is defined as the Region V Administrator, U.S. EPA, located at 77 West Jackson Boulevard, Chicago, Illinois 60604.

(9) The "Commissioner" is defined as the Commissioner of the Indiana Department of Environmental Management, located at the following address: 100 North Senate Avenue, Indianapolis, Indiana 46204-2251.

(10) Limit of Detection or LOD is defined as a measurement of the concentration of a substance that can be measured and reported with 99% confidence that the analyte concentration is greater than zero (0) for a particular analytical method and sample matrix. The LOD is equivalent to the Method Detection Level or MDL.

(11) Limit of Quantitation or LOQ is defined as a measurement of the concentration of a contaminant obtained by using a specified laboratory procedure calibrated at a specified concentration above the method detection level. It is considered the lowest concentration at which a particular contaminant can be quantitatively measured using a specified laboratory procedure for monitoring of the contaminant. This term is also called the limit of quantification or quantification level.

(12) Method Detection Level or MDL is defined as the minimum concentration of an analyte (substance) that can be measured and reported with a ninety-nine percent (99%) confidence that the analyte concentration is greater than zero (0) as determined by the procedure set forth in 40 CFR Part 136, Appendix B. The method detection level or MDL is equivalent to the LOD.

5. Test Procedures

The analytical and sampling methods used shall conform to the version of 40 CFR 136 incorporated by reference in 327 IAC 5. Different but equivalent methods are allowable if they receive the prior written approval of the Commissioner and the U.S. Environmental Protection Agency. When more than one test procedure is approved for the purposes of the NPDES program under 40 CFR 136 for the analysis of a pollutant or pollutant parameter, the test procedure must be sufficiently sensitive as defined at 40 CFR 122.21(e)(3) and 122.44(i)(1)(iv).

6. Recording Results

For each measurement or sample taken pursuant to the requirements of this permit, the permittee shall record and maintain records of all monitoring information on activities under this permit, including the following information:

a. The exact place, date, and time of sampling or measurements;

b. The person(s) who performed the sampling or measurements;

c. The dates and times the analyses were performed;

d. The person(s) who performed the analyses;

e. The analytical techniques or methods used; and

f. The results of all required analyses and measurements.

7. Additional Monitoring by Permittee

   If the permittee monitors any pollutant at the location(s) designated herein more frequently than required by this permit, using approved analytical methods as specified above, the results of such monitoring shall be included in the calculation and reporting of the values required in the Monthly Discharge Monitoring Report and on the Monthly Report of Operation form. Such increased frequency shall also be indicated on these forms. Any such additional monitoring data which indicates a violation of a permit limitation shall be followed up by the permittee, whenever feasible, with a monitoring sample obtained and analyzed pursuant to approved analytical methods. The results of the follow-up sample shall be reported to the Commissioner in the Monthly Discharge Monitoring Report.

8. Records Retention

   All records and information resulting from the monitoring activities required by this permit, including all records of analyses performed and calibration and maintenance of instrumentation and recording from continuous monitoring instrumentation, shall be retained for a minimum of three (3) years. In cases where the original records are kept at another location, a copy of all such records shall be kept at the permitted facility. The three-year period shall be extended:

   a. automatically during the course of any unresolved litigation regarding the discharge of pollutants by the permittee or regarding promulgated effluent guidelines applicable to the permittee; or

   b. as requested by the Regional Administrator or the Indiana Department of Environmental Management.

C. REOPENING CLAUSES

In addition to the reopening clause provisions cited at 327 IAC 5-2-16, the following reopening clauses are incorporated into this permit:

1. This permit may be modified or, alternately, revoked and reissued after public notice and opportunity for hearing to incorporate effluent limitations reflecting the results of a wasteload allocation if the Department of Environmental Management determines that such effluent limitations are needed to assure that State Water Quality Standards are met in the receiving stream.

2. This permit may be modified due to a change in sludge disposal standards pursuant to Section 405(d) of the Clean Water Act, if the standards when promulgated contain different conditions, are otherwise more stringent, or control pollutants not addressed by this permit.

3. This permit may be modified, or, alternately, revoked and reissued, to comply with any applicable effluent limitation or standard issued or approved under section 301(b)(2)(C), (D) and (E), 304(b)(2), and 307(a)(2) of the Clean Water Act, if the effluent limitation or standard so issued or approved:

    a. contains different conditions or is otherwise more stringent than any effluent limitation in the permit; or

    b. controls any pollutant not limited in the permit.

4. This permit may be modified, or alternately, revoked and reissued, after public notice and opportunity for hearing, to include a case-specific Method Detection Level (MDL). The permittee must demonstrate that such action is warranted in accordance with the procedure specified under Appendix B, 40 CFR Part 136, or approved by the Indiana Department of Environmental Management.

PART II

STANDARD CONDITIONS FOR NPDES PERMITS

A. GENERAL CONDITIONS

1. Duty to Comply

   The permittee shall comply with all terms and conditions of this permit in accordance with 327 IAC 5-2-8(1) and all other requirements of 327 IAC 5-2-8. Any permit noncompliance constitutes a violation of the Clean Water Act and IC 13 and is grounds for enforcement action or permit termination, revocation and reissuance, modification, or denial of a permit renewal application.

   It shall not be a defense for a permittee in an enforcement action that it would have been necessary to halt or reduce the permitted activity in order to maintain compliance with the conditions of the permit.

2. Duty to Mitigate

   In accordance with 327 IAC 5-2-8(3), the permittee shall take all reasonable steps to minimize or correct any adverse impact to the environment resulting from noncompliance with this permit. During periods of noncompliance, the permittee shall conduct such accelerated or additional monitoring for the affected parameters, as appropriate or as requested by IDEM, to determine the nature and impact of the noncompliance.

3. Duty to Provide Information

   The permittee shall submit any information that the permittee knows or has reason to believe would constitute cause for modification or revocation and reissuance of the permit at the earliest time such information becomes available, such as plans for physical alterations or additions to the facility that:

   a. could significantly change the nature of, or increase the quantity of, pollutants discharged; or

   b. the Commissioner may request to evaluate whether such cause exists.

   In accordance with 327 IAC 5-1-3(a)(5), the permittee must also provide any information reasonably requested by the Commissioner.

4. Duty to Reapply

If the permittee wishes to continue an activity regulated by this permit after the expiration date of this permit, the permittee must obtain and submit a renewal of this permit in accordance with 327 IAC 5-3-2(a)(2). It is the permittee's responsibility to obtain and submit the application. In accordance with 327 IAC 5-2-3(c), the owner of the facility or operation from which a discharge of pollutants occurs is responsible for applying for and obtaining the NPDES permit, except where the facility or operation is operated by a person other than an employee of the owner in which case it is the operator's responsibility to apply for and obtain the permit. The application must be submitted at least 180 days before the expiration date of this permit. This deadline may be extended if:

a. permission is requested in writing before such deadline;

b. IDEM grants permission to submit the application after the deadline; and

c. the application is received no later than the permit expiration date.

As required under 327 IAC 5-2-3(g)(1) and (2), POTWs with design influent flows equal to or greater than one million (1,000,000) gallons per day and POTWs with an approved pretreatment program or that are required to develop a pretreatment program, will be required to provide the results of whole effluent toxicity testing as part of their NPDES renewal application.

5. Transfers

In accordance with 327 IAC 5-2-8(4)(D), this permit is nontransferable to any person except in accordance with 327 IAC 5-2-6(c). This permit may be transferred to another person by the permittee, without modification or revocation and reissuance being required under 327 IAC 5-2-16(c)(1) or 16(e)(4), if the following occurs:

a. the current permittee notified the Commissioner at least thirty (30) days in advance of the proposed transfer date.

b. a written agreement containing a specific date of transfer of permit responsibility and coverage between the current permittee and the transferee (including acknowledgment that the existing permittee is liable for violations up to that date, and the transferee is liable for violations from that date on) is submitted to the Commissioner.

c. the transferee certifies in writing to the Commissioner their intent to operate the facility without making such material and substantial alterations or additions to the facility as would significantly change the nature or quantities

of pollutants discharged and thus constitute cause for permit modification under 327 IAC 5-2-16(d). However, the Commissioner may allow a temporary transfer of the permit without permit modification for good cause, e.g., to enable the transferee to purge and empty the facility's treatment system prior to making alterations, despite the transferee's intent to make such material and substantial alterations or additions to the facility.

d. the Commissioner, within thirty (30) days, does not notify the current permittee and the transferee of the intent to modify, revoke and reissue, or terminate the permit and to require that a new application be filed rather than agreeing to the transfer of the permit.

The Commissioner may require modification or revocation and reissuance of the permit to identify the new permittee and incorporate such other requirements as may be necessary under the Clean Water Act or state law.

6. Permit Actions

In accordance with 327 IAC 5-2-16(b) and 327 IAC 5-2-8(4), this permit may be modified, revoked and reissued, or terminated for cause, including, but not limited to, the following:

a. Violation of any terms or conditions of this permit;

b. Failure of the permittee to disclose fully all relevant facts or misrepresentation of any relevant facts in the application, or during the permit issuance process; or

c. A change in any condition that requires either a temporary or permanent reduction or elimination of the authorized discharge controlled by the permittee (e.g., plant closure, termination of the discharge by connecting to a POTW, a change in state law or information indicating the discharge poses a substantial threat to human health or welfare).

Filing of either of the following items does not stay or suspend any permit condition: (1) a request by the permittee for a permit modification, revocation and reissuance, or termination, or (2) submittal of information specified in Part II.A.3 of the permit including planned changes or anticipated noncompliance.

The permittee shall submit any information that the permittee knows or has reason to believe would constitute cause for modification or revocation and reissuance of the permit at the earliest time such information becomes available, such as plans for physical alterations or additions to the permitted facility that:

1. could significantly change the nature of, or increase the quantity of, pollutants discharged; or

2. the commissioner may request to evaluate whether such cause exists.

7. Property Rights

Pursuant to 327 IAC 5-2-8(6) and 327 IAC 5-2-5(b), the issuance of this permit does not convey any property rights of any sort or any exclusive privileges, nor does it authorize any injury to persons or private property or an invasion of rights, any infringement of federal, state, or local laws or regulations. The issuance of the permit also does not preempt any duty to obtain any other state, or local assent required by law for the discharge or for the construction or operation of the facility from which a discharge is made.

8. Severability

In accordance with 327 IAC 1-1-3, the provisions of this permit are severable and, if any provision of this permit or the application of any provision of this permit to any person or circumstance is held invalid, the invalidity shall not affect any other provisions or applications of the permit which can be given effect without the invalid provision or application.

9. Oil and Hazardous Substance Liability

Nothing in this permit shall be construed to relieve the permittee from any responsibilities, liabilities, or penalties to which the permittee is or may be subject to under Section 311 of the Clean Water Act.

10. State Laws

Nothing in this permit shall be construed to preclude the institution of any legal action or relieve the permittee from any responsibilities, liabilities, or penalties established pursuant to any applicable state law or regulation under authority preserved by Section 510 of the Clean Water Act or state law.

11. Penalties for Violation of Permit Conditions

Pursuant to IC 13-30-4, a person who violates any provision of this permit, the water pollution control laws; environmental management laws; or a rule or standard adopted by the Environmental Rules Board is liable for a civil penalty not to exceed twenty-five thousand dollars ($25,000) per day of any violation.

Pursuant to IC 13-30-5, a person who obstructs, delays, resists, prevents, or interferes with (1) the department; or (2) the department's personnel or

designated agent in the performance of an inspection or investigation performed under IC 13-14-2-2 commits a class C infraction.

Pursuant to IC 13-30-10-1.5(e), a person who willfully or negligently violates any NPDES permit condition or filing requirement, or any applicable standards or limitations of IC 13-18-3-2.4, IC 13-18-4-5, IC 13-18-12, IC 13-18-14, IC 13-18-15, or IC 13-18-16, commits a Class A misdemeanor.

Pursuant to IC 13-30-10-1.5(i), an offense under IC 13-30-10-1.5(e) is a Level 4 felony if the person knowingly commits the offense or knows that the commission of the offense places another person in imminent danger of death or serious bodily injury. An offense under IC 13-30-10-1.5(e) is a Level 3 felony if it results in serious bodily injury to any person, and a Level 2 felony if it results in death to any person.

Pursuant to IC 13-30-10-1.5(g), a person who willfully or recklessly violates any applicable standards or limitations of IC 13-18-8 commits a Class B misdemeanor.

Pursuant to IC 13-30-10-1.5(h), a person who willfully or recklessly violates any applicable standards or limitations of IC 13-18-9, IC 13-18-10, or IC 13-18-10.5 commits a Class C misdemeanor.

Pursuant to IC 13-30-10-1, a person who knowingly or intentionally makes any false material statement, representation, or certification in any NPDES form, notice, or report commits a Class B misdemeanor.

12. Penalties for Tampering or Falsification

In accordance with 327 IAC 5-2-8(10), the permittee shall comply with monitoring, recording, and reporting requirements of this permit. The Clean Water Act, as well as IC 13-30-10-1, provides that any person who knowingly or intentionally (a) destroys, alters, conceals, or falsely certifies a record, (b) tampers with, falsifies, or renders inaccurate or inoperative a recording or monitoring device or method, including the data gathered from the device or method, or (c) makes a false material statement or representation in any label, manifest, record, report, or other document; all required to be maintained under the terms of a permit issued by the department commits a Class B misdemeanor.

13. Toxic Pollutants

If any applicable effluent standard or prohibition (including any schedule of compliance specified in such effluent standard or prohibition) is established under Section 307(a) of the Clean Water Act for a toxic pollutant injurious to human health, and that standard or prohibition is more stringent than any

limitation for such pollutant in this permit, this permit shall be modified or revoked and reissued to conform to the toxic effluent standard or prohibition in accordance with 327 IAC 5-2-8(5). Effluent standards or prohibitions established under Section 307(a) of the Clean Water Act for toxic pollutants injurious to human health are effective and must be complied with, if applicable to the permittee, within the time provided in the implementing regulations, even absent permit modification.

14. Operator Certification

The permittee shall have the wastewater treatment facilities under the responsible charge of an operator certified by the Commissioner in a classification corresponding to the classification of the wastewater treatment plant as required by IC 13-18-11-11 and 327 IAC 5-22. In order to operate a wastewater treatment plant the operator shall have qualifications as established in 327 IAC 5-22-7. The permittee shall designate one (1) person as the certified operator with complete responsibility for the proper operations of the wastewater facility.

327 IAC 5-22-10.5(a) provides that a certified operator may be designated as being in responsible charge of more than one (1) wastewater treatment plant, if it can be shown that he will give adequate supervision to all units involved. Adequate supervision means that sufficient time is spent at the plant on a regular basis to assure that the certified operator is knowledgeable of the actual operations and that test reports and results are representative of the actual operations conditions. In accordance with 327 IAC 5-22-3(11), “responsible charge” means the person responsible for the overall daily operation, supervision, or management of a wastewater facility.

Pursuant to 327 IAC 5-22-10(4), the permittee shall notify IDEM when there is a change of the person serving as the certified operator in responsible charge of the wastewater treatment facility. The notification shall be made no later than thirty (30) days after a change in the operator.

15. Construction Permit

Except in accordance with 327 IAC 3, the permittee shall not construct, install, or modify any water pollution treatment/control facility as defined in 327 IAC 3-1-2(24). Upon completion of any construction, the permittee must notify the Compliance Data Section of the Office of Water Quality in writing.

16. Inspection and Entry

In accordance with 327 IAC 5-2-8(8), the permittee shall allow the Commissioner, or an authorized representative, (including an authorized contractor acting as a

representative of the Commissioner) upon the presentation of credentials and other documents as may be required by law, to:

a. Enter upon the permittee's premises where a point source, regulated facility, or activity is located or conducted, or where records must be kept pursuant to the conditions of this permit;

b. Have access to and copy, at reasonable times, any records that must be kept under the terms and conditions of this permit;

c. Inspect at reasonable times any facilities, equipment or methods (including monitoring and control equipment), practices, or operations regulated or required pursuant to this permit; and

d. Sample or monitor at reasonable times, any discharge of pollutants or internal wastestreams for the purposes of evaluating compliance with the permit or as otherwise authorized.

17. New or Increased Discharge of Pollutants

This permit prohibits the permittee from undertaking any action that would result in a new or increased discharge of a bioaccumulative chemical of concern (BCC) or a new or increased permit limit for a regulated pollutant that is not a BCC unless one of the following is completed prior to the commencement of the action:

a. Information is submitted to the Commissioner demonstrating that the proposed new or increased discharges will not cause a significant lowering of water quality as defined under 327 IAC 2-1.3-2(50). Upon review of this information, the Commissioner may request additional information or may determine that the proposed increase is a significant lowering of water quality and require the submittal of an antidegradation demonstration.

b. An antidegradation demonstration is submitted to and approved by the Commissioner in accordance with 327 IAC 2-1.3-5 and 327 IAC 2-1.3-6.

B. MANAGEMENT REQUIREMENTS

1. Facility Operations, Maintenance, and Quality Control

a. In accordance with 327 IAC 5-2-8(9), the permittee shall at all times maintain in good working order and efficiently operate all facilities and systems (and related appurtenances, i.e., equipment used for measuring and determining compliance) for collection and treatment that are:

(1) installed or used by the permittee; and

(2) necessary for achieving compliance with the terms and conditions of the permit.

Neither 327 IAC 5-2-8(9), nor this provision, shall be construed to require the operation of installed treatment facilities that are unnecessary for achieving compliance with the terms and conditions of the permit. This provision also does not prohibit taking redundant treatment units off line, provided that the permittee is at all times: maintaining in good working order and efficiently operating all facilities and systems; providing best quality effluent; and achieving compliance with the terms and conditions of the permit.

b. The permittee shall operate the permitted facility in a manner which will minimize upsets and discharges of excessive pollutants. The permittee shall properly remove and dispose of excessive solids and sludges.

c. The permittee shall provide an adequate operating staff which is duly qualified to carry out the operation, maintenance, and testing functions required to ensure compliance with the conditions of this permit.

d. Maintenance of all waste collection, control, treatment, and disposal facilities shall be conducted in a manner that complies with the bypass provisions set forth below.

e. Pursuant to 327 IAC 5-22-10(1), the permittee is responsible for providing adequate funding for and oversight of the wastewater treatment plant and collection system to ensure proper operation, maintenance, management, and supervision.

f. Any extensions to the sewer system must continue to be constructed on a separated basis. Plans and specifications, when required, for extension of the sanitary system must be submitted to the Facility Construction and Engineering Support Section, Office of Water Quality in accordance with 327 IAC 3-2-2. There shall also be an ongoing preventative maintenance program for the sanitary sewer system.

2. <u>Bypass of Treatment Facilities</u>

Pursuant to 327 IAC 5-2-8(12):

a. Terms as defined in 327 IAC 5-2-8(12)(A):

(1) “Bypass” means the intentional diversion of a waste stream from any portion of a treatment facility.

(2) “Severe property damage” means substantial physical damage to property, damage to the treatment facilities which would cause them to become inoperable, or substantial and permanent loss of natural resources which can reasonably be expected to occur in the absence of a bypass. Severe property damage does not mean economic loss caused by delays in production.

b. Bypasses, as defined above, are prohibited, and the Commissioner may take enforcement action against a permittee for bypass, unless:

(1) The bypass was unavoidable to prevent loss of life, personal injury, or severe property damage, as defined above;

(2) There were no feasible alternatives to the bypass, such as the use of auxiliary treatment facilities, retention of untreated wastes, or maintenance during normal periods of equipment downtime. This condition is not satisfied if adequate back up equipment should have been installed in the exercise of reasonable engineering judgment to prevent a bypass that occurred during normal periods of equipment downtime or preventive maintenance; and

(3) The permittee submitted notices as required under Part II.B.2.d; or

(4) The condition under Part II.B.2.f below is met.

c. Bypasses that result in death or acute injury or illness to animals or humans must be reported in accordance with the “Spill Response and Reporting Requirements” in 327 IAC 2-6.1, including calling 888/233-7745 as soon as possible, but within two (2) hours of discovery. However, under 327 IAC 2-6.1-3(1), when the constituents of the bypass are regulated by this permit, and death or acute injury or illness to animals or humans does not occur, the reporting requirements of 327 IAC 2-6.1 do not apply.

d. The permittee must provide the Commissioner with the following notice:

(1) If the permittee knows or should have known in advance of the need for a bypass (anticipated bypass), it shall submit prior written notice. If possible, such notice shall be provided at least ten (10) days before the date of the bypass for approval by the Commissioner.

(2) The permittee shall orally report an unanticipated bypass within 24 hours of becoming aware of the bypass event. The permittee must also provide a written report within five (5) days of the time the permittee becomes aware of the bypass event. The written report must contain a description

of the noncompliance (i.e. the bypass) and its cause; the period of noncompliance, including exact dates and times; if the cause of noncompliance has not been corrected, the anticipated time it is expected to continue; and steps taken or planned to reduce, eliminate and prevent recurrence of the bypass event. If a complete email submittal is sent within 24 hours of the time that the permittee became aware of the unanticipated bypass event, then that report will satisfy both the oral and written reporting requirement.

e. The Commissioner may approve an anticipated bypass, after considering its adverse effects, if the Commissioner determines that it will meet the conditions listed above in Part II.B.2.b. The Commissioner may impose any conditions determined to be necessary to minimize any adverse effects.

f. The permittee may allow any bypass to occur that does not cause a violation of the effluent limitations in the permit, but only if it also is for essential maintenance to ensure efficient operation. These bypasses are not subject to the provisions of Part II.B.2.b., d and e of this permit.

3. Upset Conditions

Pursuant to 327 IAC 5-2-8(13):

a. “Upset” means an exceptional incident in which there is unintentional and temporary noncompliance with technology-based permit effluent limitations because of factors beyond the reasonable control of the permittee. An upset does not include noncompliance to the extent caused by operational error, improperly designed treatment facilities, inadequate treatment facilities, lack of preventive maintenance, or careless or improper operation.

b. An upset shall constitute an affirmative defense to an action brought for noncompliance with such technology-based permit effluent limitations if the requirements of Paragraph c of this subsection, are met.

c. A permittee who wishes to establish the affirmative defense of upset shall demonstrate, through properly signed, contemporaneous operating logs or other relevant evidence, that:

(1) An upset occurred and the permittee has identified the specific cause(s) of the upset;

(2) The permitted facility was at the time being operated in compliance with proper operation and maintenance procedures;

(3) The permittee complied with any remedial measures required under "Duty to Mitigate", Part II.A.2; and

(4) The permittee submitted notice of the upset as required in the "Incident Reporting Requirements," Part II.C.3, or 327 IAC 2-6.1, whichever is applicable. However, under 327 IAC 2-6.1-3(1), when the constituents of the discharge are regulated by this permit, and death or acute injury or illness to animals or humans does not occur, the reporting requirements of 327 IAC 2-6.1 do not apply.

d. In any enforcement proceeding, the permittee seeking to establish the occurrence of an upset has the burden of proof pursuant to 40 CFR 122.41(n)(4).

4. Removed Substances

Solids, sludges, filter backwash, or other pollutants removed from or resulting from treatment or control of wastewaters shall be disposed of in a manner such as to prevent any pollutant from such materials from entering waters of the State and to be in compliance with all Indiana statutes and regulations relative to liquid and/or solid waste disposal.

a. Collected screenings, slurries, sludges, and other such pollutants shall be disposed of in accordance with provisions set forth in 329 IAC 10, 327 IAC 6.1, or another method approved by the Commissioner.

b. The permittee shall comply with existing federal regulations governing solids disposal, and with applicable provisions of 40 CFR Part 503, the federal sludge disposal regulation standards.

c. The permittee shall notify the Commissioner prior to any changes in sludge use or disposal practices.

d. The permittee shall maintain records to demonstrate its compliance with the above disposal requirements.

5. Power Failures

In accordance with 327 IAC 5-2-10 and 327 IAC 5-2-8(14) in order to maintain compliance with the effluent limitations and prohibitions of this permit, the permittee shall either:

a. provide an alternative power source sufficient to operate facilities utilized by the permittee to maintain compliance with the effluent limitations and conditions of this permit, or

b. shall halt, reduce or otherwise control all discharge in order to maintain compliance with the effluent limitations and conditions of this permit upon the reduction, loss, or failure of one or more of the primary sources of power to facilities utilized by the permittee to maintain compliance with the effluent limitations and conditions of this permit.

6. Unauthorized Discharge

Any overflow or release of sanitary wastewater from the wastewater treatment facilities or collection system that results in a discharge to waters of the state and is not specifically authorized by this permit is expressly prohibited. These discharges are subject to the reporting requirements in Part II.C.3 of this permit.

C. REPORTING REQUIREMENTS

1. Planned Changes in Facility or Discharge

Pursuant to 327 IAC 5-2-8(11)(F) and 5-2-16(d), the permittee shall give notice to the Commissioner as soon as possible of any planned alterations or additions to the facility (which includes any point source) that could significantly change the nature of, or increase the quantity of, pollutants discharged. Following such notice, the permit may be modified to revise existing pollutant limitations and/or to specify and limit any pollutants not previously limited. Material and substantial alterations or additions to the permittee's operation that were not covered in the permit (e.g., production changes, relocation or combination of discharge points, changes in the nature or mix of products produced) are also cause for modification of the permit. However those alterations which constitute total replacement of the process or the production equipment causing the discharge converts it into a new source, which requires the submittal of a new NPDES application.

2. Monitoring Reports

Pursuant to 327 IAC 5-2-8(10), 327 IAC 5-2-13, and 327 IAC 5-2-15, monitoring results shall be reported at the intervals and in the form specified in "Data On Plant Operation", Part I.B.2.

3. Incident Reporting Requirements

Pursuant to 327 IAC 5-2-8(11) and 327 IAC 5-1-3, the permittee shall orally report to the Commissioner information on the following incidents within 24 hours from the time permittee becomes aware of such occurrence. If the incident meets the emergency criteria of item b (Part II.C.3.b) or 327 IAC 2-6.1, then the report shall be made as soon as possible, but within two (2) hours of discovery. However, under 327 IAC 2-6.1-3(1), when the constituents of the discharge are

regulated by this permit, and death or acute injury or illness to animals or humans does not occur, the reporting requirements of 327 IAC 2-6.1 do not apply.

a. Any unanticipated bypass which exceeds any effluent limitation in the permit;

b. Any emergency incident which may pose a significant danger to human health or the environment. Reports under this item shall be made as soon as the permittee becomes aware of the incident by calling 317/233-7745 (888/233-7745 toll free in Indiana). This number should only be called when reporting these emergency events;

c. Any upset (as defined in Part II.B.3 above) that exceeds any technology-based effluent limitations in the permit;

d. Any release, including basement backups, from the sanitary sewer system (including satellite sewer systems operated or maintained by the permittee) not specifically authorized by this permit. Reporting of known releases from private laterals not caused by a problem in the sewer system owned or operated by the permittee is not required under Part II.C.3, however, documentation of such events must be maintained by the permittee and available for review by IDEM staff; or

e. Any discharge from any outfall from which discharge is explicitly prohibited by this permit as well as any discharge from any other outfall or point not listed in this permit.

The permittee can make the oral reports by calling 317/232-8670 during regular business hours and asking for the Compliance Data Section, or by calling (317/233-7745) (888/233-7745 toll free in Indiana) during non-business hours. A written submission shall also be provided within five (5) days of the time the permittee becomes aware of the circumstances. The written submission shall contain: a description of the event and its cause; the period of occurrence, including exact dates and times, and, if the event has not concluded, the anticipated time it is expected to continue; and steps taken or planned to reduce, mitigate and eliminate the event and steps taken or planned to prevent its recurrence. The Commissioner may waive the written report on a case-by-case basis if the oral report has been received within 24 hours. Alternatively the permittee may submit a “Bypass Overflow/Incident Report” (State Form 48373) or a “Noncompliance Notification Report” (State Form 54215), whichever is appropriate, to IDEM at wwreports@idem.IN.gov. If a complete submittal is sent within 24 hours of the time that the permittee became aware of the occurrence, then that report will satisfy both the oral and written reporting requirements.

4. Other Noncompliance

Pursuant to 327 IAC 5-2-8(11)(D), the permittee shall report any instance of noncompliance not reported under the "Incident Reporting Requirements" in Part II.C.3 at the time the pertinent Discharge Monitoring Report is submitted. The written submission shall contain: a description of the noncompliance and its cause; the period of noncompliance, including exact dates and times, and, if the noncompliance has not been corrected, the anticipated time it is expected to continue; and steps taken or planned to reduce, eliminate and prevent the noncompliance.

5. Other Information

Pursuant to 327 IAC 5-2-8(11)(E), where the permittee becomes aware that it failed to submit any relevant facts or submitted incorrect information in a permit application or in any report to the Commissioner, the permittee shall promptly submit such facts or corrected information to the Commissioner.

6. Signatory Requirements

Pursuant to 327 IAC 5-2-22 and 327 IAC 5 2 8(15):

a. All reports required by the permit and other information requested by the Commissioner shall be signed and certified by a person described below or by a duly authorized representative of that person:

(1) For a corporation: by a principal executive defined as a president, secretary, treasurer, any vice-president of the corporation in charge of a principal business function, or any other person who performs similar policy-making functions for the corporation or the manager of one or more manufacturing, production, or operating facilities employing more than two hundred fifty (250) persons or having gross annual sales or expenditures exceeding twenty-five million dollars ($25,000,000) (in second quarter 1980 dollars), if authority to sign documents has been assigned or delegated to the manager in accordance with corporate procedures.

(2) For a partnership or sole proprietorship: by a general partner or the proprietor, respectively; or

(3) For a federal, state, or local governmental body or any agency or political subdivision thereof: by either a principal executive officer or ranking elected official.

b. A person is a duly authorized representative only if:

(1) The authorization is made in writing by a person described above.

(2) The authorization specifies either an individual or a position having responsibility for the overall operation of the regulated facility or activity, such as the position of plant manager, operator of a well or a well field, superintendent, or position of equivalent responsibility. (A duly authorized representative may thus be either a named individual or any individual occupying a named position.); and

(3) The authorization is submitted to the Commissioner.

c. Electronic Signatures. If documents described in this section are submitted electronically by or on behalf of the NPDES-regulated facility, any person providing the electronic signature for such documents shall meet all relevant requirements of this section, and shall ensure that all of the relevant requirements of 40 CFR part 3 (including, in all cases, subpart D to part 3) (Cross-Media Electronic Reporting) and 40 CFR part 127 (NPDES Electronic Reporting Requirements) are met for that submission.

d. Certification. Any person signing a document identified under paragraphs a and b of this section, shall make the following certification:

"I certify under penalty of law that this document and all attachments were prepared under my direction or supervision in accordance with a system designed to assure that qualified personnel properly gather and evaluate the information submitted. Based on my inquiry of the person or persons who manage the system, or those persons directly responsible for gathering the information, the information submitted is, to the best of my knowledge and belief, true, accurate, and complete. I am aware that there are significant penalties for submitting false information, including the possibility of fine and imprisonment for knowing violations."

7. Availability of Reports

Except for data determined to be confidential under 327 IAC 12.1, all reports prepared in accordance with the terms of this permit shall be available for public inspection at the offices of the Indiana Department of Environmental Management and the Regional Administrator. As required by the Clean Water Act, permit applications, permits, and effluent data shall not be considered confidential.

8. Penalties for Falsification of Reports

IC 13-30 and 327 IAC 5-2-8(15) provides that any person who knowingly makes any false statement, representation, or certification in any record or other document submitted or required to be maintained under this permit, including monitoring reports or reports of compliance or noncompliance, shall, upon conviction, be punished by a fine of not more than $10,000 per violation, or by imprisonment for not more than 180 days per violation, or by both.

9. Progress Reports

In accordance with 327 IAC 5-2-8(11)(A), reports of compliance or noncompliance with, or any progress reports on, interim and final requirements contained in any compliance schedule of this permit shall be submitted no later than fourteen (14) days following each schedule date.

10. Advance Notice for Planned Changes

In accordance with 327 IAC 5-2-8(11)(B), the permittee shall give advance notice to IDEM of any planned changes in the permitted facility, any activity, or other circumstances that the permittee has reason to believe may result in noncompliance with permit requirements.

11. Additional Requirements for POTWs and/or Treatment Works Treating Domestic Sewage

a. All POTWs shall identify, in terms of character and volume of pollutants, any significant indirect discharges into the POTW which are subject to pretreatment standards under section 307(b) and 307 (c) of the CWA.

b. All POTWs must provide adequate notice to the Commissioner of the following:

(1) Any new introduction of pollutants into the POTW from an indirect discharger that would be subject to section 301 or 306 of the CWA if it were directly discharging those pollutants.

(2) Any substantial change in the volume or character of pollutants being introduced into that POTW by any source where such change would render the source subject to pretreatment standards under section 307(b) or 307(c) of the CWA or would result in a modified application of such standards.

As used in this clause, “adequate notice” includes information on the quality and quantity of effluent introduced into the POTW, and any anticipated

impact of the change on the quantity or quality of the effluent to be discharged from the POTW.

c. This permit incorporates any conditions imposed in grants made by the U.S. EPA and/or IDEM to a POTW pursuant to Sections 201 and 204 of the Clean Water Act, that are reasonably necessary for the achievement of effluent limitations required by Section 301 of the Clean Water Act.

d. This permit incorporates any requirements of Section 405 of the Clean Water Act governing the disposal of sewage sludge from POTWs or any other treatment works treating domestic sewage for any use for which rules have been established in accordance with any applicable rules.

e. POTWs must develop and submit to the Commissioner a POTW pretreatment program when required by 40 CFR 403 and 327 IAC 5-19-1, in order to assure compliance by industrial users of the POTW with applicable pretreatment standards established under Sections 307(b) and 307(c) of the Clean Water Act. The pretreatment program shall meet the criteria of 327 IAC 5-19-3 and, once approved, shall be incorporated into the POTW's NPDES permit.

12. Electronic Reporting

IDEM is currently developing the technology and infrastructure necessary to allow compliance with the EPA Phase 2 e-reporting requirements per 40 CFR 127.16 and to allow electronic reporting of applications, notices, plans, reports, and other information not covered by the federal e-reporting regulations.

IDEM will notify the permittee when IDEM's e-reporting system is ready for use for one or more applications, notices, plans, reports, or other information. This IDEM notice will identify the specific applications, notices, plans, reports, or other information that are to be submitted electronically and the permittee will be required to use the IDEM electronic reporting system to submit the identified application(s), notice(s), plan(s), report(s), or other information.

See Part I.B.3., Monthly Reporting, for the electronic reporting requirements for the monthly monitoring reports such as the Discharge Monitoring Report (DMR), Monthly Report of Operation (MRO) and Monthly Monitoring Report (MMR).

13. Trucked or Hauled Pollutants

The permittee shall prohibit the introduction of trucked or hauled pollutants into the treatment works, except under the following conditions:

a. The permittee has provided prior written permission to the person seeking to discharge the hauled or trucked pollutants into the treatment works;

b. The person seeking to discharge the hauled or trucked pollutants into the treatment works possesses a valid wastewater management permit and valid vehicle licenses, as required by IDEM;

c. The pollutants that are introduced are limited to domestic sanitary wastewaters;

(1) The introduction of trucked or hauled in industrial wastewaters into the treatment works is prohibited, unless the permittee receives approval per (2) below;

(2) The permittee must notify and receive approval of the department prior to the acceptance of the industrial wastewater in accordance with Part II.A.3, Part II.C.1 and Part II.C.10 of this permit;

d. The pollutants are introduced into the treatment works via a discharge point designated by the permittee.

14. <u>Hauled Waste Requirements</u>

In the event that the permittee allows the introduction of trucked or hauled pollutants under the conditions specified in item 13 above, the permittee shall:

a. Obtain and retain, for a minimum of forty-eight hours, samples that are representative of the hauled or trucked pollutants;

b. Analyze the samples obtained pursuant to item “a” above in the event that the permittee believes or has reason to believe that the hauled or trucked pollutants may be causing and/or contributing to pass-through and/or interference;

c. Maintain records, for each discharge of trucked or hauled pollutants into the treatment works, of the following:

(1) Name of the person discharging the trucked or hauled pollutants;

(2) Wastewater management permit number (if applicable) and vehicle license number and expiration date;

(3) Origination, volume, and nature of the trucked or hauled pollutants;

(4) Date and time of the discharge;

(5) Any sampling conducted; and

(6) Analytical Results, if any.

D. ADDRESSES

1. Municipal NPDES Permits Section

Indiana Department of Environmental Management
Office of Water Quality – Rm 1255
Municipal NPDES Permits Section
100 N. Senate Avenue
Indianapolis, Indiana 46204-2251

The following correspondence shall be sent to the Municipal NPDES Permits Section:

a. NPDES permit applications (new, renewal or modifications) with fee

b. Preliminary Effluent Limits request letters

c. Comment letters pertaining to draft NPDES permits

d. NPDES permit transfer of ownership requests

e. NPDES permit termination requests

f. Notifications of substantial changes to a treatment facility, including new industrial sources

g. Combined Sewer Overflow (CSO) Operational Plans

h. CSO Long Term Control Plans (LTCP)

i. Stream Reach Characterization and Evaluation Reports (SRCER)

j. Streamlined Mercury Variance Annual Reports

2. Facility Construction and Engineering Support Section

   Indiana Department of Environmental Management
   Office of Water Quality – Rm 1255
   Facility Construction and Engineering Support Section
   100 N. Senate Avenue
   Indianapolis, Indiana 46204-2251

   The following correspondence shall be sent to the Facility Construction and Engineering Support Section:

   a. Construction permit applications with fee

3. Compliance Data Section

   Indiana Department of Environmental Management
   Office of Water Quality – Rm 1255
   Compliance Data Section
   100 N. Senate Avenue
   Indianapolis, Indiana 46204-2251

   The following correspondence shall be sent to the Compliance Data Section:

   a. Discharge Monitoring Reports (DMRs)

   b. Monthly Reports of Operation (MROs)

   c. Monthly Monitoring Reports (MMRs)

   d. CSO MROs

   e. Gauging station and flow meter calibration documentation

   f. Compliance schedule progress reports

   g. Completion of Construction notifications

   h. Whole Effluent Toxicity (WET) Testing reports

   i. Notification of two (2) consecutive failed WETTs and the intent to begin implementation of a TRE

   j. Notification of initiation of a TRE

   k. TRE plans and progress reports

l. TRE final report

m. Bypass/Overflow Reports

n. Anticipated Bypass/Overflow Reports

4. Pretreatment Group

Indiana Department of Environmental Management
Office of Water Quality – Rm 1255
Compliance Data Section – Pretreatment Group
100 N. Senate Avenue
Indianapolis, Indiana 46204-2251

The following correspondence shall be sent to the Pretreatment Group:

a. Organic Pollutant Monitoring Reports

b. Significant Industrial User (SIU) Quarterly Noncompliance Reports

c. Pretreatment Program Annual Reports

d. Sewer Use Ordinances

e. Enforcement Response Plans (ERP)

f. Sludge analytical results

National Pollutant Discharge Elimination System
Briefing Memo for the
Town of Fort Branch Wastewater Treatment Plant

Draft: March 23, 2022
Final: TBD

Indiana Department of Environmental Management
100 North Senate Avenue
Indianapolis, Indiana 46204
(317) 232-8603
Toll Free (800) 451-6027
www.idem.IN.gov

Permittee:	Ms. Sandy Birch, President Town Council of Fort Branch 603 South Hillcrest Street Fort Branch, Indiana 47648 sandy.birch@fortbranch.org 812-499-7491
Existing Permit Information:	Permit Number: IN0022896 Expiration Date: August 31, 2022
Facility Contact:	Byron Will, Certified Operator haubstadtsd@gmail.com 812-768-5929
Facility Location:	823 West 800 South Fort Branch, Indiana 47648 Gibson County
Receiving Stream:	West Fork Pigeon Creek
GLI/Non-GLI:	Non-GLI
Proposed Permit Action:	Renewal
Date Application Received:	February 16, 2022
Facility Category	NPDES Minor Municipal
Permit Writer:	John Donnellan, Senior Environmental Manager jdonnell@idem.in.gov 317-234-0865

LOCATION OF THE TREATMENT PLANT OUTFALL

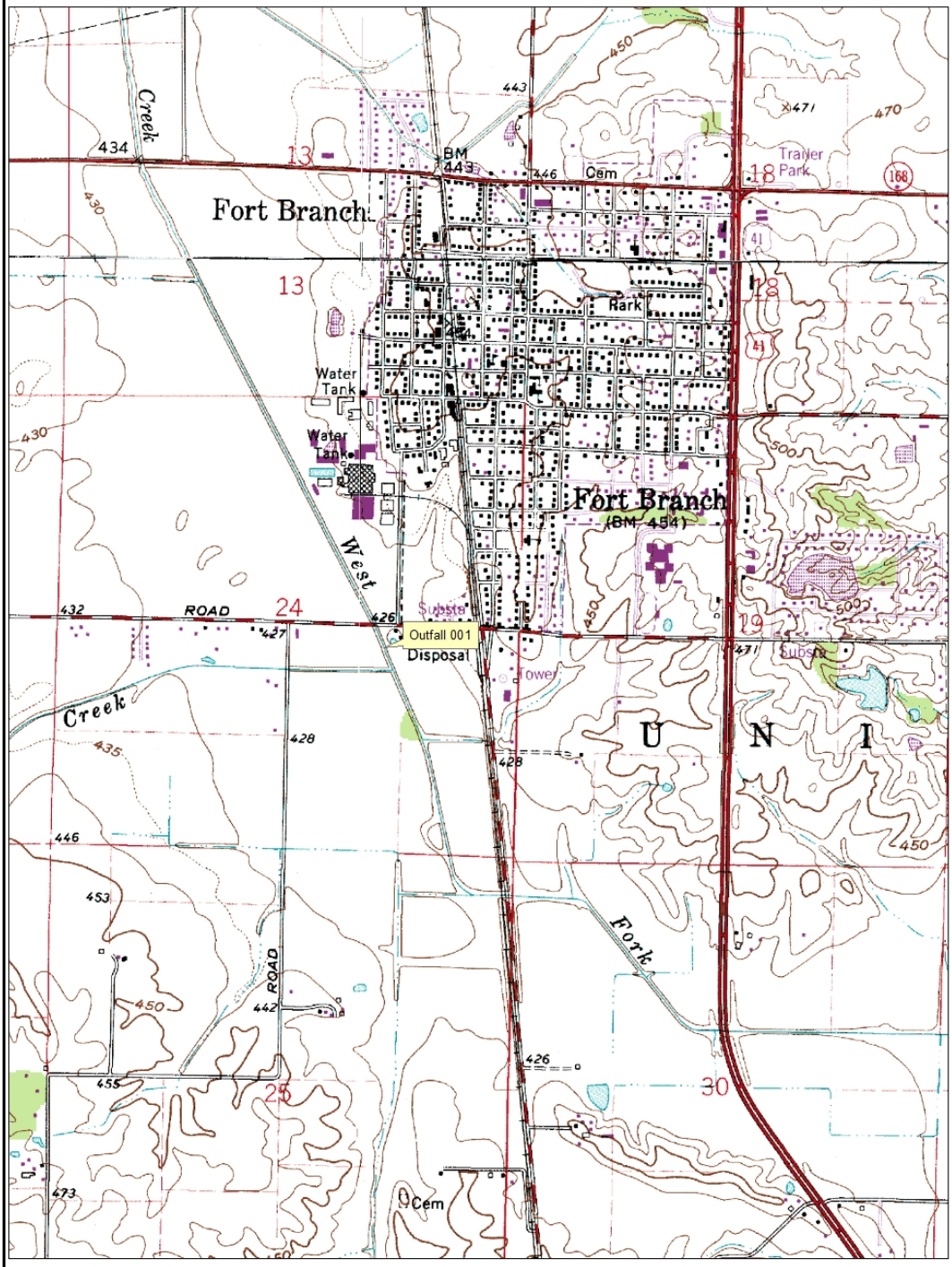

This map is intended to serve as an aid in graphic representation only. This information is not warranted for accuracy or other purposes.

Mapped By:
John Donnellan, Office of Water Quality
Date: 03/07/2022

Sources:
Non Orthophotography
Data - Obtained from the State of Indiana Geographical Information Office Library
Orthophotography - Obtained from Indiana Map Framework Data (www.indianamap.org)
Map Projection: UTM Zone 16 N **Map Datum:** NAD83

Legend
Imagery\Quad_24K
RGB
Red: Red
Green: Green
Blue: Blue

FLOW SCHEMATIC FOR THE FACILITY

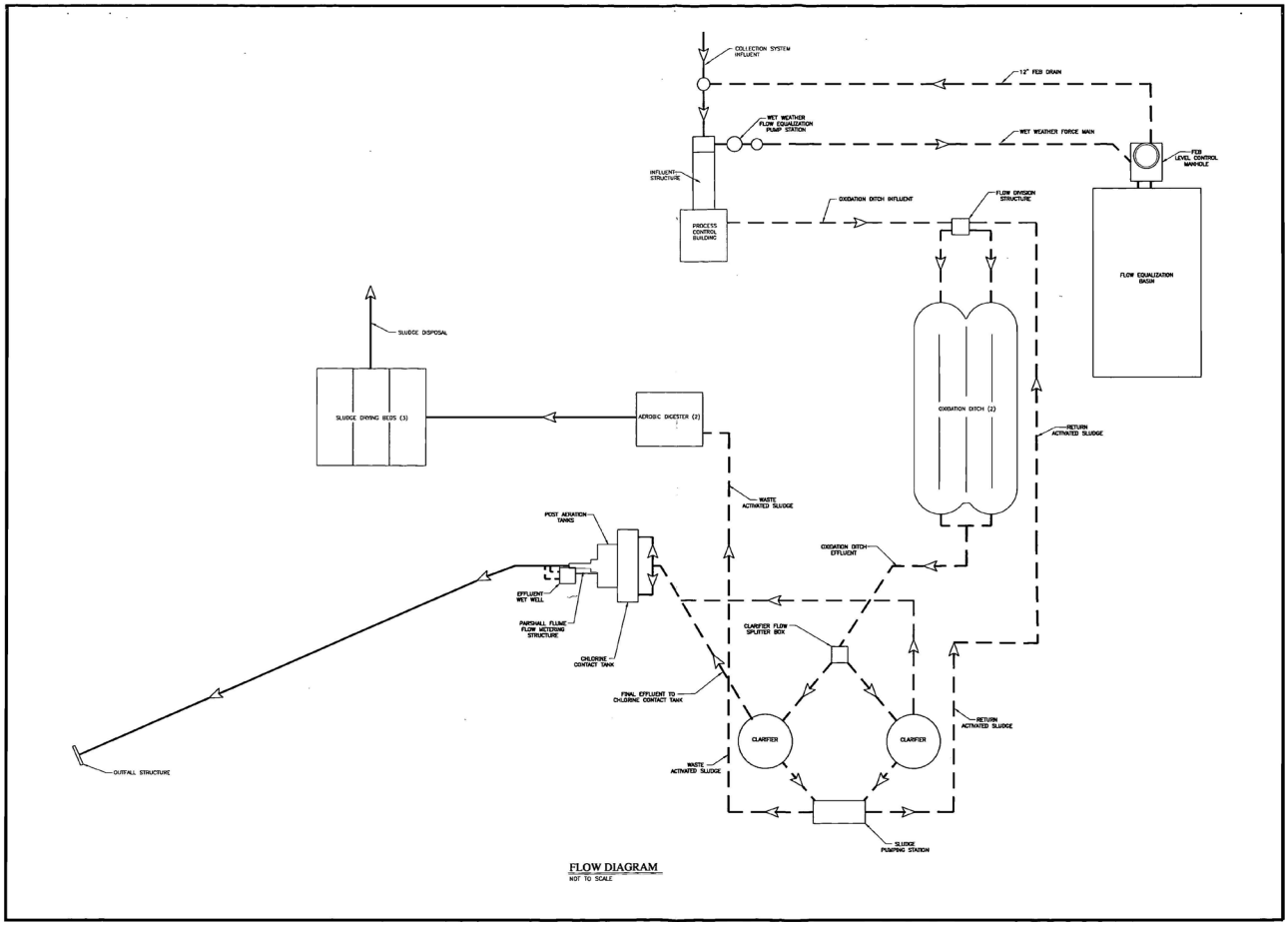

Outfall Location	Latitude:	38° 14' 15" N
	Longitude:	87° 34' 56" W

In order to comply with Office policy on rounding, the GPS coordinates for Outfall 001 have been changed to round the 'seconds' portion of the measurement to the nearest whole number. However, the physical location of the outfall has not changed.

Background

This is the proposed renewal of the NPDES permit for the Town of Fort Branch Wastewater Treatment Plant which was issued on May 12, 2017 and has an expiration date of August 31, 2022. The permittee submitted an application for renewal which was received on February 16, 2022. The permittee currently operates a Class II, 0.7 MGD activated sludge oxidation ditch treatment facility consisting of a flow equalization basin, a macerator, an auger, grit removal, a wet well, two (2) oxidation ditches, two (2) clarifiers, chlorination/dechlorination disinfection facilities, post aeration, and flow measurement. Sludge is treated in an aerobic digester and is dewatered in drying beds. Final sludge is landfilled. There were no modifications to the permit nor construction permits issued since the facility's NPDES aforementioned permit renewal.

Collection System

The collection system is comprised of 100% separate sanitary sewers by design with no overflow or bypass points.

Spill Reporting Requirements

Reporting requirements associated with the Spill Reporting, Containment, and Response requirements of 327 IAC 2-6.1 are included in Part II.B.2.c. and Part II.C.3. of the NPDES permit. Spills from the permitted facility meeting the definition of a spill under 327 IAC 2-6.1-4(15), the applicability requirements of 327 IAC 2-6.1-1, and the Reportable Spills requirements of 327 IAC 2-6.1-5 (other than those meeting an exclusion under 327 IAC 2-6.1-3 or the criteria outlined below) are subject to the Reporting Responsibilities of 327 IAC 2-6.1-7.

It should be noted that the reporting requirements of 327 IAC 2-6.1 do not apply to those discharges or exceedances that are under the jurisdiction of an applicable permit when the substance in question is covered by the permit and death or acute injury or illness to animals or humans does not occur. In order for a discharge or exceedance to be under the jurisdiction of this NPDES permit, the substance in question (a) must have been discharged in the normal course of operation from an outfall listed in this permit, and (b) must have been discharged from an outfall for which the permittee has authorization to discharge that substance.

Solids Disposal

The permittee is required to dispose of its sludge in accordance with 329 IAC 10, 327 IAC 6.1, or 40 CFR Part 503. Solids at the facility are hauled to a landfill for disposal.

Receiving Stream

The facility discharges to the West Fork Pigeon Creek via Outfall 001. The receiving water has a seven day, ten year low flow ($Q_{7,10}$) of 0.4 cubic feet per second (0.26 MGD) at the outfall location. This provides a dilution ratio of receiving stream flow to treated effluent of 0.4:1. There are no lakes or reservoirs within forty (40) miles downstream of the facility. The receiving stream is designated for full body contact recreational use and shall be capable of supporting a well-balanced warm water aquatic community in accordance with 327 IAC 2-1.

The West Fork Pigeon Creek in assessment unit INE0213_04 and HUC12 051402020103 is not on the 2020 303(d) list of impairments for any parameters. A Total Maximum Daily Load (TMDL) which includes the receiving stream has been completed as part of the Highland - Pigeon Creek TMDL which was approved by U.S. EPA on September 7, 2011. The TMDL addressed impairments related to *E. coli*. The effluent limitations for *E. coli* in this permit are consistent with this TMDL.

Industrial Contributions

There is no industrial flow to the wastewater treatment plant. This NPDES permit does not authorize the facility to accept industrial contributions until the permittee has provided the Indiana Department of Environmental Management with a characterization of the waste, including volume amounts, and this Office has determined whether effluent limitations are needed to ensure the State water quality standards are met in the receiving stream.

Antidegradation

Indiana's Antidegradation Standards and Implementation procedures are outlined in 327 IAC 2-1.3. The antidegradation standards established by 327 IAC 2-1.3-3 apply to all surface waters of the state. The permittee is prohibited from undertaking any deliberate action that would result in a new or increased discharge of a bioaccumulative chemical of concern (BCC) or a new or increased permit limit for a regulated pollutant that is not a BCC unless information is submitted to the commissioner demonstrating that the proposed new or increased discharge will not cause a significant lowering of water quality, or an antidegradation demonstration submitted and approved in accordance 327 IAC 2-1.3-5 and 2-1.3-6. The NPDES permit does not propose to establish a new or increased loading of a regulated pollutant; therefore, the Antidegradation Implementation Procedures in 327 IAC 2-1.3-5 and 2-1.3-6 do not apply to the permitted discharge.

Effluent Limitations and Rationale

The effluent limitations proposed herein are based on Indiana Water Quality Standards, NPDES regulations, and Wasteload Allocation (WLA) analyses performed by this Office's Permits Branch staff on July 15, 1987 and March 22, 1993. These limits are in accordance with antibacksliding regulations specified in 327 IAC 5-2-10(a)(11)(A). Monitoring frequencies are based upon facility size and type.

For publicly owned treatment works, the 30-day average percent removal for Carbonaceous Biochemical Oxygen Demand (CBOD5) and Total Suspended Solids shall not be less than 85 percent in accordance with 40 CFR Part 133.102, as incorporated by reference in 327 IAC 5-2-1.5. The permittee must monitor the influent and effluent CBOD5 and TSS at least once per month and calculate the percent removal to ensure compliance with the required 85 percent removal. This information must be maintained on site and provided to this Office's staff upon request.

The final effluent limitations to be limited and/or monitored include: Flow, Carbonaceous Biochemical Oxygen Demand ($CBOD_5$), Total Suspended Solids (TSS), Ammonia-nitrogen (NH_3-N), pH, Dissolved Oxygen (DO), Total Residual Chlorine (TRC), and *Escherichia coli* (*E. coli)*.

Final Effluent Limitations

The summer monitoring period runs from May 1 through November 30 of each year and the winter monitoring period runs from December 1 through April 30 of each year. The disinfection season runs from April 1 through October 31 of each year. The mass limits for $CBOD_5$, TSS, and ammonia-nitrogen are calculated by multiplying the average design flow (in MGD) by the corresponding concentration value and by 8.345.

Influent Monitoring

The raw influent and the wastewater from intermediate unit treatment processes, as well as the final effluent shall be sampled and analyzed for the pollutants and operational parameters specified by the applicable Monthly Report of Operation Form, as appropriate, in accordance with 327 IAC 5-2-13 and Part I.B.2 of the permit. Except where the permit specifically states otherwise, the sample frequency for the raw influent and intermediate unit treatment process shall be at a minimum the same frequency as that for the final effluent. The measurement frequencies specified in each of the tables in Part I.A. are the minimum frequencies required by the permit.

Flow

Flow is to be measured five (5) times weekly as a 24-hour total. Reporting of flow is required by 327 IAC 5-2-13.

$CBOD_5$

$CBOD_5$ is limited to 16.5 mg/l (96.4 lbs/day) as a monthly average and 24.7 mg/l (144.3 lbs/day) as a weekly average during the summer monitoring period. During the winter monitoring period, $CBOD_5$ is limited to 25 mg/l (146.0 lbs/day) as a monthly average and 40 mg/l (233.7 lbs/day) as a weekly average. Monitoring is to be conducted three (3) times weekly by 24-hour composite sampling. The $CBOD_5$ concentration limitations included in this permit are water quality-based effluent limitations set in accordance with the WLA analysis performed by this Office's Permits Branch staff on July 15, 1987 and with antibacksliding regulations specified in 327 IAC 5-2-10(a)(11)(A). This limits are the same as the concentration limitations found in the facility's previous permit.

TSS

TSS is limited to 20 mg/l (116.8 lbs/day) as a monthly average and 30 mg/l (175.2 lbs/day) as a weekly average during the summer monitoring period. During the winter monitoring period, TSS is limited to 30 mg/l (175.2 lbs/day) as a monthly average and 45 mg/l (262.9 lbs/day) as a weekly average. Monitoring is to be conducted three (3) times weekly by 24-hour composite sampling. The TSS concentration limitations included in this permit are water quality-based effluent limitations set in accordance with the WLA analysis performed by this Office's Permits Branch staff on July 15, 1987 and with antibacksliding regulations specified in 327 IAC 5-2-10(a)(11)(A). This limits are the same as the concentration limitations found in the facility's previous permit.

Ammonia-nitrogen

Ammonia-nitrogen is limited to 1.1 mg/l (6.4 lbs/day) as a monthly average and 1.6 mg/l (9.3 lbs/day) as a weekly average during the summer monitoring period. During the winter monitoring period, ammonia-nitrogen is limited to 1.6 mg/l (9.3 lbs/day) as a monthly average and 2.4 mg/l (14.0 lbs/day) as a weekly average. Monitoring is to be conducted three (3) times weekly by 24-hour composite sampling. The ammonia-nitrogen concentration limitations included in this permit are water quality-based effluent limitations set in accordance with the WLA analysis performed by this Office's Permits Branch staff on March 22, 1993 and with antibacksliding regulations specified in 327 IAC 5-2-10(a)(11)(A). This limits are the same as the concentration limitations found in the facility's previous permit.

pH

The pH limitations have been based on 40 CFR 133.102 which is cross-referenced in 327 IAC 5-5-3. To ensure conditions necessary for the maintenance of a well-balanced aquatic community, the pH of the final effluent must be between 6.0 and 9.0 standard units in accordance with provisions in 327 IAC 2-1-6(b)(2). pH must be measured five (5) times weekly by grab sampling. These pH limitations are the same as the limitations found in the facility's previous permit.

Dissolved Oxygen

Dissolved oxygen shall not fall below 6.0 mg/l as a daily minimum average during the summer monitoring period. During the winter monitoring period, dissolved oxygen shall not fall below 5.0 mg/l as a daily minimum average. These dissolved oxygen limitations are water quality-based effluent limitations set in accordance the WLA analysis performed by this Office's Permits Branch staff on July 15, 1987 and are the same as the concentration limitations found in the facility's previous permit. Dissolved oxygen measurements must be based on the average of three (3) grab samples taken within a 24-hr. period. This monitoring is to be conducted five (5) times weekly.

Total Residual Chlorine

Disinfection of the effluent is required from April 1 through October 31, annually. The chlorine residual shall be maintained at a concentration not less than 0.5 mg/l as measured at the effluent end of the chlorine contact tank for the term of the permit. The daily maximum chlorine residual value at the chlorine contact tank shall also be reported. Effluent dechlorination will be required in order to protect aquatic life. In accordance with Indiana Water Quality Standards, the final effluent limits (end-of-pipe) for TRC are 0.01 mg/l monthly average and 0.02 mg/l daily maximum. Compliance will be demonstrated if the observed effluent concentrations are less than the limit of quantitation (0.06 mg/l). Disinfection requirements are established in 327 IAC 5-10-6. This monitoring is to be conducted five (5) times weekly by grab sampling.

E. coli

The *E. coli* limitations and monitoring requirements apply from April 1 through October 31, annually. *E. coli* is limited to 125 count/100 ml as a monthly average, and 235 count/100 ml as a daily maximum. The monthly average *E. coli* value shall be calculated as a geometric mean. This monitoring is to be conducted three (3) times weekly by grab sampling. These *E. coli* limitations are set in accordance with regulations specified in 327 IAC 5-10-6.

Backsliding

None of the concentration limits included in this permit conflict with antibacksliding regulations found in 327 IAC 5-2-10(a)(11)(A), therefore, backsliding is not an issue.

Reopening Clauses

Four (4) reopening clauses were incorporated into the permit in Part I.C. One clause is to incorporate effluent limits from any further wasteload allocations performed; a second clause is to allow for changes in the sludge disposal standards; a third clause is to incorporate any applicable effluent limitation or standard issued or approved under section 301(b)(2)(C), (D) and (E), 304(b)(2), and 307(a)(2) of the Clean Water Act; and a fourth clause is to include a case-specific Method Detection Level (MDL).

Compliance Status

The permittee entered into an Agreed Order (Order No. 2015-22844-W) with this Office on July 8, 2015. The Agreed Order cites the permittee for solids and discoloration in the plant effluent and inadequate record keeping. The Order contains requirements that the plant be properly operated and that all reporting requirements be met. Fort Branch received a Sewer Ban Early Warning letter on February 16, 2017.

Expiration Date

A five-year NPDES permit is proposed.

Permit Processing/Public Comment

Pursuant to IC 13-15-5-1, IDEM will publish the draft permit document online at https://www.in.gov/idem/public-notices/. Additional information on public participation can be found in the "Citizens' Guide to IDEM", available at https://www.in.gov/idem/resources/citizens-guide-to-idem/. A 30-day comment period is available to solicit input from interested parties, including the public.