STATE OF INDIANA
DEPARTMENT OF ENVIRONMENTAL MANAGEMENT
PUBLIC NOTICE NO. 20210923 IN0062707 – D
DATE OF NOTICE: SEPTEMBER 23, 2021
DATE RESPONSE DUE: OCTOBER 25, 2021

The Office of Water Quality proposes the following NPDES DRAFT PERMIT:

MINOR – RENEWAL

IROQUOIS BIO-ENERGY CO, LLC, Permit No. IN0062707, JASPER COUNTY, 751 W SR 114, Rensselaer, IN. This industrial facility discharges 0.121 million gallons daily of process and non-process wastewater into Sage Ditch. Permit Manager: Devery J. DeBoy, 317/232-8701, DDeboy@idem.in.gov. Posted online at https://www.in.gov/idem/public-notices/.

PROCEDURES TO FILE A RESPONSE

Draft can be viewed or copied (10¢ per page) at IDEM/OWQ NPDES PS, 100 North Senate Avenue, (Rm 1203) Indianapolis, IN, 46204 (east end elevators) from 9 – 4, Mon - Fri, (except state holidays). A copy of the Draft Permit is on file at the local County Health Department. Please tell others you think would be interested in this matter. For your rights & responsibilities see: Public Notices: https://www.in.gov/idem/public-notices/; Citizen Guide: https://www.in.gov/idem/resources/citizens-guide-to-idem/. Please tell others whom you think would be interested in this matter.

Response Comments: The proposed decision to issue a permit is tentative. Interested persons are invited to submit written comments on the Draft permit. All comments must be postmarked no later than the Response Date noted to be considered in the decision to issue a Final permit. Deliver or mail all requests or comments to the attention of the Permit Writer at the above address, (mail code 65-42 PS).

To Request a Public Hearing:

Any person may request a Public Hearing. A written request must be submitted to the above address on or before the Response Date noted. The written request shall include: the name and address of the person making the request, the interest of the person making the request, persons represented by the person making the request, the reason for the request and the issues proposed for consideration at the Hearing. IDEM will determine whether to hold a Public Hearing based on the comments and the rationale for the request. Public Notice of such a Hearing will be published in at least one newspaper in the geographical area of the discharge and sent to anyone submitting written comments and/or making such request and whose name is on the mailing list at least 30 days prior to the Hearing.

INDIANA DEPARTMENT OF ENVIRONMENTAL MANAGEMENT
We Protect Hoosiers and Our Environment.
100 N. Senate Avenue • Indianapolis, IN 46204
(800) 451-6027 • (317) 232-8603 • www.idem.IN.gov

Eric J. Holcomb
Governor

Bruno Pigott
Commissioner

September 23, 2021

VIA ELECTRONIC MAIL

Mr. B. Gunner Greene, General Manager/Chief Operating Officer
Iroquois Bi-Energy Company, LLC
751 West State Road 114
Rensselaer, IN 47978

Dear Mr. Greene:

Re: NPDES Permit No. IN0062707
Draft Permit
Iroquois Bi-Energy Company, LLC
Rensselaer, IN – Jasper County

Your application and supporting documents have been reviewed and processed in accordance with rules adopted under 327 IAC 5. Enclosed is a copy of the draft NPDES Permit.

Pursuant to IC 13-15-5-1, IDEM will publish the draft permit document online at https://www.in.gov/idem/public-notices/. Additional information on public participation can be found in the "Citizens' Guide to IDEM", available at https://www.in.gov/idem/resources/citizens-guide-to-idem/. A 30-day comment period is available to solicit input from interested parties, including the public.

Please review this draft permit and associated documents carefully to become familiar with the proposed terms and conditions. Comments concerning the draft permit should be submitted in accordance with the procedure outlined in the enclosed public notice form. We suggest that you meet with us to discuss major concerns or objections you may have with the draft permit.

Questions concerning this draft permit may be addressed to Ms. Devery J. DeBoy of my staff, at 317/232-8701 or DDeboy@idem.in.gov.

Sincerely,

Nikki Gardner

Nikki Gardner, Chief
Industrial NPDES Permits Section
Office of Water Quality

Enclosures

cc: Jasper County Health Department
Jennifer Wunsh, EHS Manager
Samantha Groce, IDEM

STATE OF INDIANA

DEPARTMENT OF ENVIRONMENTAL MANAGEMENT

AUTHORIZATION TO DISCHARGE UNDER THE

NATIONAL POLLUTANT DISCHARGE ELIMINATION SYSTEM

In compliance with the provisions of the Federal Water Pollution Control Act, as amended, (33 U.S.C. 1251 et seq., the “Clean Water Act” or “CWA”), and IDEM’s authority under IC 13-15,

IROQUOIS BIO-ENGINEERING CO., LLC

is authorized to discharge from ethanol production facility that is located at 751 West State Road 114, Rensselaer, Indiana to receiving waters identified as Sage Ditch in accordance with effluent limitations, monitoring requirements, and other conditions set forth in Parts I and II hereof. This permit may be revoked for the nonpayment of applicable fees in accordance with IC 13-18-20.

Effective Date:_____

Expiration Date:_____

In order to receive authorization to discharge beyond the date of expiration, the permittee shall submit such information and forms as are required by the Indiana Department of Environmental Management no later than 180 days prior to the date of expiration.

Issued on _____ for the Indiana Department of Environmental Management.

Jerry Dittmer, Chief
Permits Branch
Office of Water Quality

PART I

A. EFFLUENT LIMITATIONS AND MONITORING REQUIREMENTS

1. The permittee is authorized to discharge from the outfall listed below in accordance with the terms and conditions of this permit. The permittee is authorized to discharge from Outfall 001, located at Latitude 40° 56' 2", Longitude -87° 3' 3". The discharge is limited to cooling tower blowdown, reverse osmosis reject, filter backwash and water softener regeneration. Samples taken in compliance with the monitoring requirements below shall be taken at a point representative of the discharge but prior to entry into Sage Ditch. Such discharge shall be limited and monitored by the permittee as specified below:

DISCHARGE LIMITATIONS [1][2]
Outfall 001

Table 1

	Quantity or Loading			Quality or Concentration			Monitoring Requirements	
Parameter	Monthly Average	Daily Maximum	Units	Monthly Average	Daily Maximum	Units	Measurement Frequency	Sample Type
Flow	Report	Report	MGD	-----	-----	-----	1 X Weekly	24 Hour Total
TRC [4][5]	-----	-----	-----	0.02	0.04	mg/l	1 X Weekly	Grab
Chloride	-----	-----	-----	218	378	mg/l	2 X Monthly	Grab
Sulfate	-----	-----	-----	948	1643	mg/l	2 X Monthly	Grab
Temperature [6]	-----	-----	-----	Report	Report	°F	1 X Weekly	Grab
Whole Effluent Toxicity Testing [7]								

Table 2

	Quality or Concentration			Monitoring Requirements	
Parameter	Daily Minimum	Daily Maximum	Units	Measurement Frequency	Sample Type
pH [3]	6.0	9.0	s.u.	1 X Weekly	Grab

[1] See Part I.B. of the permit for the minimum narrative limitations.

[2] In the event that a new water treatment additive is to be used that will contribute to this Outfall, or changes are to be made in the use of water treatment additives, including dosage, the permittee must apply for and receive approval from IDEM prior to such discharge. Discharges of any such additives must meet Indiana water quality standards. The permittee must apply for permission to use water treatment additives by completing and submitting State Form 50000 (Application for Approval to Use Water Treatment Additives) currently available at: https://www.in.gov/idem/forms/idem-agency-forms/.

[3] If the permittee collects more than one grab sample on a given day for pH, the values shall not be averaged for reporting daily maximums or daily minimums. The permittee must report the individual minimum and the individual maximum pH value of any sample during the month on the Monthly Monitoring Report form.

[4] The water quality-based effluent limit (WQBEL) for Total Residual Chlorine (TRC) is less than the limit of quantitation (LOQ) as specified in footnote [5]. Compliance with this permit will be demonstrated if the effluent concentrations measured are less than the LOQ.

If the measured concentration of TRC is greater than the water quality-based effluent limitations and above the respective LOD specified in footnote [5] in any three (3) consecutive analyses, or any five (5) out of nine (9) analyses, then the discharger shall:

(1) Determine the source of the parameter through an evaluation of sampling techniques, analytical/laboratory procedures, and waste streams (including internal waste streams); and re-examine the chlorination /dechlorination procedures.

(2) The sampling and analysis for TRC shall be increased to 2 X weekly and remain at this increased sampling frequency until:

(a) The increased sampling frequency for TRC has been in place for at least five (5) weeks;

(b) At least nine (9) samples have been taken under this increased sampling frequency; and

(c) The measured concentration of TRC is less than the LOD specified in footnote TRC in at least seven (7) out of the nine (9) most recent analyses.

[5] The following EPA approved test methods and associated LODs and LOQs are to be used in the analysis of the effluent samples. Alternative methods may be used if first approved by IDEM and EPA, if applicable.

Parameter	Test Method	LOD	LOQ
Chlorine, Total residual	4500-Cl D-2000, E-2000 or G-2000	0.02 mg/l	0.06 mg/l

Case-Specific LOD/LOQ

The permittee may determine and use a case-specific LOD or LOQ using the analytical method specified above, or any other analytical method which is approved by the Commissioner, and EPA if applicable, prior to use. The LOD shall be derived by the procedure specified for method detection limits contained in 40 CFR Part 136, Appendix B, and the LOQ shall be set equal to 3.18 times the LOD. Other methods may be used if first approved by the Commissioner.

[6] The discharge from Outfall 001, shall not exceed the maximum limits in the following table by more than three degrees Fahrenheit (3ºF) (one and seven-tenths degrees Celsius (1.7ºC)).

Table 1

	Jan	Feb	Mar	Apr	May	Jun	Jul	Aug	Sep	Oct	Nov	Dec
ºF	50	50	60	70	80	90	90	90	90	78	70	57
ºC	10	10	15.6	21.1	26.7	32.2	32.2	32.2	32.2	25.5	21.1	14

[7] See Part I.D. of the permit for Whole Effluent Toxicity Testing Requirements.

B. MINIMUM NARRATIVE LIMITATIONS

At all times the discharge from any and all point sources specified within this permit shall not cause receiving waters:

1. including waters within the mixing zone, to contain substances, materials, floating debris, oil, scum attributable to municipal, industrial, agricultural, and other land use practices, or other discharges that do any of the following:

    a. will settle to form putrescent or otherwise objectionable deposits;

    b. are in amounts sufficient to be unsightly or deleterious;

    c. produce color, visible oil sheen, odor, or other conditions in such degree as to create a nuisance;

    d. are in amounts sufficient to be acutely toxic to , or to otherwise severely injure or kill aquatic life, other animals, plants, or humans;

    e. are in concentrations or combinations that will cause or contribute to the growth of aquatic plants or algae to such a degree as to create a nuisance, be unsightly, or otherwise impair the designated uses.

2. outside the mixing zone, to contain substances in concentrations that on the basis of available scientific data are believed to be sufficient to injure, be chronically toxic to, or be carcinogenic, mutagenic, or teratogenic to humans, animals, aquatic life, or plants.

C. MONITORING AND REPORTING

1. <u>Representative Sampling</u>

    Samples and measurements taken as required herein shall be representative of the volume and nature of the monitored discharge flow and shall be taken at times which reflect the full range and concentration of effluent parameters normally expected to be present. Samples shall not be taken at times to avoid showing elevated levels of any parameters.

2. Monthly Reporting

The permittee shall submit monitoring reports to the Indiana Department of Environmental Management (IDEM) containing results obtained during the previous month and shall be submitted no later than the 28th day of the month following each completed monitoring period. The first report shall be submitted by the 28th day of the month following the month in which the permit becomes effective. These reports shall include, but not necessarily be limited to, the Discharge Monitoring Report (DMR) and the Monthly Monitoring Report (MMR). All reports shall be submitted electronically by using the NetDMR application, upon registration, receipt of the NetDMR Subscriber Agreement, and IDEM approval of the proposed NetDMR Signatory. Access the NetDMR website (for initial registration and DMR/MMR submittal) via CDX at: https://cdx.epa.gov/. The Regional Administrator may request the permittee to submit monitoring reports to the Environmental Protection Agency if it is deemed necessary to assure compliance with the permit. See Part II.C.10 of this permit for Future Electronic Reporting Requirements.

a. Calculations that require averaging of measurements of daily values (both concentrations and mass) shall use an arithmetic mean, except the monthly average for *E. coli* shall be calculated as a geometric mean.

b. Daily effluent values (both mass and concentration) that are less than the LOQ that are used to determine the monthly average effluent level shall be accommodated in calculation of the average using statistical methods that have been approved by the Commissioner.

c. Effluent concentrations less than the LOD shall be reported on the Discharge Monitoring Report (DMR) forms as < (less than) the value of the LOD. For example, if a substance is not detected at a concentration of 0.1 µg/l, report the value as <0.1 µg/l.

d. Effluent concentrations greater than or equal to the LOD and less than the LOQ that are reported on a DMR shall be reported as the actual value and annotated on the DMR to indicate that the value is not quantifiable.

e. Mass discharge values which are calculated from concentrations reported as less than the value of the limit of detection shall be reported as less than the corresponding mass discharge value.

f. Mass discharge values that are calculated from effluent concentrations greater than the limit of detection shall be reported as the calculated value.

3. Definitions

a. "Monthly Average" means the total mass or flow-weighted concentration of all daily discharges during a calendar month on which daily discharges are sampled or measured, divided by the number of daily discharges sampled and/or measured during such calendar month.

The monthly average discharge limitation is the highest allowable average monthly discharge for any calendar month.

b. "Daily Discharge" means the total mass of a pollutant discharged during the calendar day or, in the case of a pollutant limited in terms other than mass pursuant to 327 IAC 5-2-11(e), the average concentration or other measurement of the pollutant specified over the calendar day or any twenty-four hour period that reasonably represents the calendar day for the purposes of sampling.

c. "Daily Maximum" means the maximum allowable daily discharge for any calendar day.

d. A "24-hour composite sample" means a sample consisting of at least 3 individual flow-proportioned samples of wastewater, taken by the grab sample method or by an automatic sampler, which are taken at approximately equally spaced time intervals for the duration of the discharge within a 24-hour period and which are combined prior to analysis. A flow-proportioned composite sample may be obtained by:

(1) recording the discharge flow rate at the time each individual sample is taken,

(2) adding together the discharge flow rates recorded from each individuals sampling time to formulate the "total flow" value,

(3) the discharge flow rate of each individual sampling time is divided by the total flow value to determine its percentage of the total flow value,

(4) then multiply the volume of the total composite sample by each individual sample's percentage to determine the volume of that individual sample which will be included in the total composite sample.

e. "Concentration" means the weight of any given material present in a unit volume of liquid. Unless otherwise indicated in this permit, concentration values shall be expressed in milligrams per liter (mg/l).

f. The “Regional Administrator” is defined as the Region 5 Administrator, U.S. EPA, located at 77 West Jackson Boulevard, Chicago, Illinois 60604.

g. The “Commissioner” is defined as the Commissioner of the Indiana Department of Environmental Management, which is located at the following address: 100 North Senate Avenue, Indianapolis, Indiana 46204.

h. “Limit of Detection” or “LOD” means the minimum concentration of a substance that can be measured and reported with ninety-nine percent (99%) confidence that the analyte concentration is greater than zero (0) for a particular analytical method and sample matrix.

i. “Limit of Quantitation” or “LOQ” means a measurement of the concentration of a contaminant obtained by using a specified laboratory procedure calibrated at a specified concentration above the method detection level. It is considered the lowest concentration at which a particular contaminant can be quantitatively measured using a specified laboratory procedure for monitoring of the contaminant. This term is also sometimes called limit of quantification or quantification level.

j. “Method Detection Level” or “MDL” means the minimum concentration of an analyte (substance) that can be measured and reported with a ninety-nine percent (99%) confidence that the analyte concentration is greater than zero (0) as determined by procedure set forth in 40 CFR 136, Appendix B. The method detection level or MDL is equivalent to the LOD.

k. “Grab Sample” means a sample which is taken from a wastestream on a one-time basis without consideration of the flow rate of the wastestream and without considerations of time.

4. <u>Test Procedures</u>

The analytical and sampling methods used shall conform to the version of 40 CFR 136 incorporated by reference in 327 IAC 5. Different but equivalent methods are allowable if they receive the prior written approval of the Commissioner and the U.S. Environmental Protection Agency. When more than one test procedure is approved for the purposes of the NPDES program under 40 CFR 136 for the analysis of a pollutant or pollutant parameter, the test procedure must be sufficiently sensitive as defined at 40 CFR 122.21(e)(3) and 122.44(i)(1)(iv).

5. Recording of Results

For each measurement or sample taken pursuant to the requirements of this permit, the permittee shall maintain records of all monitoring information and monitoring activities, including:

a. The date, exact place and time of sampling or measurement;

b. The person(s) who performed the sampling or measurements;

c. The date(s) analyses were performed;

d. The person(s) who performed the analyses;

e. The analytical techniques or methods used; and

f. The results of such measurements and analyses.

6. Additional Monitoring by Permittee

If the permittee monitors any pollutant at the location(s) designated herein more frequently than required by this permit, using approved analytical methods as specified above, the results of this monitoring shall be included in the calculation and reporting of the values required in the monthly Discharge Monitoring Report (DMR) and Monthly Monitoring Report (MMR). Such increased frequency shall also be indicated. Other monitoring data not specifically required in this permit (such as internal process or internal waste stream data) which is collected by or for the permittee need not be submitted unless requested by the Commissioner.

7. Records Retention

All records and information resulting from the monitoring activities required by this permit, including all records of analyses performed and calibration and maintenance of instrumentation and recording from continuous monitoring instrumentation, shall be retained for a minimum of three (3) years. In cases where the original records are kept at another location, a copy of all such records shall be kept at the permitted facility. The three years shall be extended:

a. automatically during the course of any unresolved litigation regarding the discharge of pollutants by the permittee or regarding promulgated effluent guidelines applicable to the permittee; or

b. as requested by the Regional Administrator or the Indiana Department of Environmental Management.

D. WHOLE EFFLUENT TOXICITY TESTING REQUIREMENTS

To adequately assess the effects of the effluent on aquatic life, the permittee is required by this section of the permit to conduct chronic whole effluent toxicity (WET) testing. Part I.D.1. of this permit describes the testing procedures and Part I.D.2. describes the toxicity reduction evaluation (TRE) which is only required if the effluent demonstrates toxicity in two (2) consecutive toxicity tests as described in Part I.D.1.f.

1. Whole Effluent Toxicity (WET) Tests

The permittee must conduct the series of aquatic toxicity tests specified in Part I.D.1.d. to monitor the acute and chronic toxicity of the effluent discharged from Outfall(s) 001.

If toxicity is demonstrated in two (2) consecutive toxicity tests, as described in Part I.D.1.f., with any test species during the term of the permit, the permittee is required to conduct a TRE under Part I.D.2.

a. Toxicity Test Procedures and Data Analysis

(1) All test organisms, test procedures and quality assurance criteria used must be in accordance with the Short-term Methods for Estimating the Chronic Toxicity of Effluents and Receiving Water to Freshwater Organisms, Fourth Edition, Section 11, Fathead Minnow (*Pimephales promelas*) Larval Survival and Growth Test Method 1000.0, and Section 13, Daphnid (*Ceriodaphnia dubia*) Survival and Reproduction Test Method 1002.0, EPA 821-R-02-013, October 2002 (hereinafter "Chronic Toxicity Test Method"), or most recent update that conforms to the version of 40 CFR 136 incorporated by reference in 327 IAC 5. [References to specific portions of the Chronic Toxicity Test Method contained in this Part I.D. are provided for informational purposes. If the Chronic Toxicity Test Method is updated, the corresponding provisions of that updated method would be applicable.

(2) Any circumstances not covered by the above methods, or that require deviation from the specified methods must first be approved by the IDEM Permits Branch.

(3) The determination of acute and chronic endpoints of toxicity (LC_{50}, NOEC and IC_{25} values) must be made in accordance with the procedures in Section 9, "Chronic Toxicity Test Endpoints and Data Analysis" and the Data Analysis procedures as outlined in Section 11 for fathead minnow (Test Method 1000.0; see flowcharts in Figures 5, 6 and 9) and Section 13 for *Ceriodaphnia dubia* (Test Method 1002.0; see flowcharts in Figures 4 and 6) of the Chronic Toxicity Test Method. The IC_{25} value together with 95% confidence intervals calculated by the Linear Interpolation and Bootstrap Methods in Appendix M of the Chronic Toxicity Test Method must be determined in addition to the NOEC value.

b. Types of Whole Effluent Toxicity Tests

(1) Tests may include a 3-brood (7-day) definitive static-renewal daphnid (*Ceriodaphnia dubia*) survival and reproduction toxicity test and a 7-day definitive static-renewal fathead minnow (*Pimephales promelas*) larval survival and growth toxicity test.

(2) All tests must be conducted using 24-hour composite samples of final effluent. Three effluent samples are to be collected on alternate days (e.g., collected on days one, three and five). The first effluent sample will be used for test initiation and for test solution renewal on day 2. The second effluent sample will be used for test solution renewal on days 3 and 4. The third effluent sample will be used for test solution renewal on days 5, 6 and 7. If shipping problems are encountered with renewal samples after a test has been initiated, the most recently used sample may continue to be used for test renewal, if first approved by the IDEM Permits Branch, but for no longer than 72 hours after first use.

(3) The whole effluent dilution series for the definitive test must include a control and at least five effluent concentrations with a minimum dilution factor of 0.5. The effluent concentrations selected must include and, if practicable, bracket the effluent concentrations associated with the determinations of acute and chronic toxicity provided in Part I.D.1.f. Guidance on selecting effluent test concentrations is included in Section 8.10 of the Chronic Toxicity Test Method. The use of an alternate procedure for selecting test concentrations must first be approved by the IDEM Permits Branch.

(4) If, in any control, more than 10% of the test organisms die in the first 48 hours with a daphnid species or the first 96 hours with fathead minnow, or more than 20% of the test organisms die in 7 days, that test is considered invalid and the toxicity test must be repeated. In addition, if in the *Ceriodaphnia dubia* survival and reproduction test, the average number of young produced per surviving female in the control group is less than 15, or if 60% of surviving control females have less than three broods; and in the fathead minnow (*Pimephales promelas*) survival and growth test, if the mean dry weight of surviving fish in the control group is less than 0.25 mg, that test is considered invalid and must also be repeated. All other test conditions and test acceptability criteria for the fathead minnow (*Pimephales promelas*) and *Ceriodaphnia dubia* chronic toxicity tests must be in accordance with the test requirements in Section 11 (Test Method 1000.0), Table 1 and Section 13 (Test Method 1002.0), Table 3, respectively, of the Chronic Toxicity Test Method.

c. Effluent Sample Collection and Chemical Analysis

(1) Whole effluent samples taken for the purposes of toxicity testing must be 24-hour composite samples collected at a point that is representative of the final effluent, but prior to discharge. Effluent sampling for the toxicity testing may be coordinated with other permit sampling requirements as appropriate to avoid duplication. First use of the whole effluent toxicity testing samples must not exceed 36 hours after termination of the 24-hour composite sample collection and must not be used for longer than 72 hours after first use. For discharges of less than 24 hours in duration, composite samples must be collected for the duration of the discharge within a 24-hour period (see “24-hour composite sample” definition in Part I.C.3. of this permit).

(2) Chemical analysis must accompany each effluent sample taken for toxicity testing, including each sample taken for the repeat testing as outlined in Part I.D.1.f.(3). The chemical analysis detailed in Part I.A.1 must be conducted for the effluent sample in accordance with Part I.C.4. of this permit.

d. Toxicity Testing Species, Frequency and Duration

Chronic toxicity testing for *Ceriodaphnia dubia* or fathead minnow (*Pimephales promelas*) must be conducted once every six (6) months, as calculated from the effective date of the permit, for the duration of the permit. Under the previous permit, this facility conducted whole effluent toxicity testing using the most sensitive species.

Based on the permittee's record of compliance with whole effluent toxicity testing, the number of species tested may continue to include only the one most sensitive to the toxicity in the effluent.

If a TRE is initiated during the term of the permit, after receiving notification under Part I.D.1.e, the Compliance Data Section will suspend the toxicity testing requirements above for the term of the TRE compliance schedule described in Part I.D.2. After successful completion of the TRE, the toxicity tests established under Part I.D.2.c.(4) must be conducted once every six (6) months, as calculated from the first day of the first month following successful completion of the post-TRE toxicity tests (see Part I.D.2.c.(4)), for the remainder of the permit term.

e. Reporting

(1) Notifications of the failure of two (2) consecutive toxicity tests and the intent to begin the implementation of a toxicity reduction evaluation (TRE) under Part I.D.1.f.(4) must be submitted in writing to the Compliance Data Section of IDEM's Office of Water Quality.

(2) Results of all toxicity tests, including invalid tests, must be reported to IDEM according to the general format and content recommended in the Chronic Toxicity Test Method, Section 10, "Report Preparation and Test Review". However, only the results of valid toxicity tests are to be reported on the discharge monitoring report (DMR). The results of the toxicity tests and laboratory report are due by the earlier of 60 days after completion of the test or the 28th day of the month following the end of the period established in Part I.D.1.d.

(3) The full whole effluent toxicity (WET) test laboratory report must be submitted to IDEM electronically as an attachment to an e-mail to the Compliance Data Section at wwreports@idem.IN.gov. The results must also be submitted via NetDMR.

(4) For quality control and ongoing laboratory performance, the laboratory report must include results from appropriate standard reference toxicant tests. This will consist of acute (LC_{50} values), if available, and chronic (NOEC, LOEC and IC_{25} values) endpoints of toxicity obtained from reference toxicant tests conducted within 30 days of the most current effluent toxicity tests and from similarly obtained historical reference toxicant data with mean values and appropriate ranges for each species tested for at least three months to one year. Toxicity test laboratory reports must also include copies of chain-of-custody records and laboratory raw data sheets.

(5) Statistical procedures used to analyze and interpret toxicity data (e.g., Fisher's Exact Test and Steel's Many-one Rank Test for 7-day survival of test organisms; tests of normality (e.g., Shapiro-Wilk's Test) and homogeneity of variance (e.g., Bartlett's Test); appropriate parametric (e.g., Dunnett's Test) and non-parametric (e.g., Steel's Many-one Rank Test) significance tests and point estimates (IC_{25}) of effluent toxicity, etc.; together with graphical presentation of survival, growth and reproduction of test organisms), including critical values, levels of significance and 95% confidence intervals, must be described and included as part of the toxicity test laboratory report.

(6) For valid toxicity tests, the whole effluent toxicity (WET) test laboratory report must include a summary table of the results for each species tested as shown in the table presented below. This table will provide toxicity test results, reported in acute toxic units (TU_a) and chronic toxic units (TU_c), for evaluation under Part I.D.1.f. and reporting on the discharge monitoring report (DMR).

Test Organism [1]	Test Type	Endpoint [2]	Units	Result	Compliance Limit [6]	Pass/ Fail [7]	Reporting
Ceriodaphnia dubia	3-brood (7-day) Definitive Static-Renewal Survival and Reproduction	48-hr. LC_{50}	%	Report			Laboratory Report
			TU_a	Report			
		NOEC Survival	%	Report			
			TU_c	Report			
		NOEC Reproduction	%	Report			
			TU_c	Report			
		IC_{25} Reproduction	%	Report			
			TU_c	Report			
		Toxicity (acute) [3]	TU_a	Report [5]	1.0	Report	Laboratory Report **and NetDMR** (Parameter Code 61425)
		Toxicity (chronic) [4]	TU_c	Report [5]	1.0	Report	Laboratory Report **and NetDMR** (Parameter Code 61426)
Pimephales promelas	7-day Definitive Static-Renewal Larval Survival and Growth	96-hr. LC_{50}	%	Report			Laboratory Report
			TU_a	Report			
		NOEC Survival	%	Report			
			TU_c	Report			
		NOEC Growth	%	Report			
			TU_c	Report			
		IC_{25} Growth	%	Report			
			TU_c	Report			
		Toxicity (acute) [3]	TU_a	Report [5]	1.0	Report	Laboratory Report **and NetDMR** (Parameter Code 61427)
		Toxicity (chronic) [4]	TU_c	Report [5]	1.0	Report	Laboratory Report **and NetDMR** (Parameter Code 61428)

[1] For the whole effluent toxicity (WET) test laboratory report, eliminate from the table any species that was not tested.
[2] A separate acute test is not required. The endpoint of acute toxicity must be extrapolated from the chronic toxicity test.
[3] The toxicity (acute) endpoint for *Ceriodaphnia dubia* is the 48-hr. LC_{50} result reported in acute toxic units (TU_a). The toxicity (acute) endpoint for *Pimephales promelas* is the 96-hr. LC_{50} result reported in acute toxic units (TU_a).

[4] The toxicity (chronic) endpoint for *Ceriodaphnia dubia* is the higher of the NOEC Survival, NOEC Reproduction and IC_{25} Reproduction values reported in chronic toxic units (TU_c). The toxicity (chronic) endpoint for *Pimephales promelas* is the higher of the NOEC Survival, NOEC Growth and IC_{25} Growth values reported in chronic toxic units (TU_c).
[5] Report the values for acute and chronic endpoints of toxicity determined in [3] and [4] for the corresponding species. These values are the ones that need to be reported on the discharge monitoring report (DMR).
[6] These values do not represent effluent limitations, but rather exceedance of these values results in a demonstration of toxicity that triggers additional action and reporting by the permittee.
[7] If the toxicity result (in TUs) is less than or equal to the compliance limit, report "Pass". If the toxicity result (in TUs) exceeds the compliance limit, report "Fail".

f. Demonstration of Toxicity

(1) Toxicity (acute) will be demonstrated if the effluent is observed to have exceeded 1.0 TU_a (acute toxic units) for *Ceriodaphnia dubia* in 48 hours or in 96 hours for *Pimephales promelas*. For this purpose, a separate acute toxicity test is not required. The results for the acute toxicity demonstration must be extrapolated from the chronic toxicity test. For the purpose of selecting test concentrations under Part I.D.1.b.(2), the effluent concentration associated with acute toxicity is 100%.

(2) Toxicity (chronic) will be demonstrated if the effluent is observed to have exceeded 1.0 TU_c (chronic toxic units) for *Ceriodaphnia dubia* or *Pimephales promelas* from the chronic toxicity test. For the purpose of selecting test concentrations under Part I.D.1.b.(2), the effluent concentration associated with chronic toxicity is 100%.

(3) If toxicity (acute) or toxicity (chronic) is demonstrated in any of the chronic toxicity tests specified above, a repeat chronic toxicity test using the procedures in Part I.D.1. of this permit and the same test species must be initiated within two (2) weeks of test failure. During the sampling for any repeat tests, the permittee must also collect and preserve sufficient effluent samples for use in any toxicity identification evaluation (TIE) and/or toxicity reduction evaluation (TRE), if necessary.

(4) If any two (2) consecutive chronic toxicity tests, including any and all repeat tests, demonstrate acute or chronic toxicity, the permittee must notify the Compliance Data Section under Part I.D.1.e. within 30 days of the date of termination of the second test, and begin the implementation of a toxicity reduction evaluation (TRE) as described in Part I.D.2. After receiving notification from the permittee, the Compliance Data Section will suspend the whole effluent toxicity testing requirements in Part I.D.1. for the term of the TRE compliance schedule.

g. Definitions

(1) "Acute toxic unit" or "TU_a" is defined as $100/LC_{50}$ where the LC_{50} is expressed as a percent effluent in the test medium of an acute whole effluent toxicity (WET) test that is statistically or graphically estimated to be lethal to fifty percent (50%) of the test organisms.

(2) "Chronic toxic unit" or "TU_c" is defined as 100/NOEC or $100/IC_{25}$, where the NOEC or IC_{25} are expressed as a percent effluent in the test medium.

(3) "Inhibition concentration 25" or "IC_{25}" means the toxicant (effluent) concentration that would cause a twenty-five percent (25%) reduction in a nonquantal biological measurement for the test population. For example, the IC_{25} is the concentration of toxicant (effluent) that would cause a twenty-five percent (25%) reduction in mean young per female or in growth for the test population.

(4) "No observed effect concentration" or "NOEC" is the highest concentration of toxicant (effluent) to which organisms are exposed in a full life cycle or partial life cycle (short term) test, that causes no observable adverse effects on the test organisms, that is, the highest concentration of toxicant (effluent) in which the values for the observed responses are not statistically significantly different from the controls.

2. <u>Toxicity Reduction Evaluation (TRE) Schedule of Compliance</u>

The development and implementation of a TRE is only required if toxicity is demonstrated in two (2) consecutive tests as described in Part I.D.1.f.(4). The post-TRE toxicity testing requirements in Part I.D.2.c. must also be completed as part of the TRE compliance schedule.

Milestone Dates: See a. through e. below for more detail on the TRE milestone dates.

Requirement	Deadline
Development and Submittal of a TRE Plan	Within 90 days of the date of two (2) consecutive failed toxicity tests.
Initiate a TRE Study	Within 30 days of TRE Plan submittal.
Submit TRE Progress Reports	Every 90 days beginning six (6) months from the date of two (2) consecutive failed toxicity tests.
Post-TRE Toxicity Testing Requirements	Immediately upon completion of the TRE, conduct three (3) consecutive months of toxicity tests with both test species; if no acute or chronic toxicity is shown with any test species, reduce toxicity tests to once every six (6) months for the remainder of the permit term. If post-TRE toxicity testing demonstrates toxicity, continue the TRE study.
Submit Final TRE Report	Within 90 days of successfully completing the TRE (including the post-TRE toxicity testing requirements), not to exceed three (3) years from the date that toxicity is initially demonstrated in two (2) consecutive toxicity tests.

a. Development of TRE Plan

Within 90 days of the date of two (2) consecutive failed toxicity tests (i.e. the date of termination of the second test), the permittee must submit plans for an effluent TRE to the Compliance Data Section. The TRE plan must include appropriate measures to characterize the causative toxicants and reduce toxicity in the effluent discharge to levels that demonstrate no toxicity with any test species as described in Part I.D.1.f. Guidance on conducting effluent toxicity reduction evaluations is available from EPA and from the EPA publications listed below:

(1) Methods for Aquatic Toxicity Identification Evaluations:

Phase I Toxicity Characterization Procedures, Second Edition (EPA/600/6-91/003), February 1991.

Phase II Toxicity Identification Procedures for Samples Exhibiting Acute and Chronic Toxicity (EPA/600/R-92/080), September 1993.

Phase III Toxicity Confirmation Procedures for Samples Exhibiting Acute and Chronic Toxicity (EPA/600/R-92/081), September 1993.

(2) Toxicity Identification Evaluation: Characterization of Chronically Toxic Effluents, Phase I (EPA/600/6-91/005F), May 1992.

(3) Generalized Methodology for Conducting Industrial Toxicity Reduction Evaluations (TREs) (EPA/600/2-88/070), April 1989.

(4) Clarifications Regarding Toxicity Reduction and Identification Evaluations in the National Pollutant Discharge Elimination System Program, U.S. EPA, March 27, 2001.

b. Conduct the TRE

Within 30 days after submittal of the TRE plan to the Compliance Data Section, the permittee must initiate the TRE consistent with the TRE plan.

c. Post-TRE Toxicity Testing Requirements

(1) After completing the TRE, the permittee must conduct monthly post-TRE toxicity tests with the two (2) test species *Ceriodaphnia dubia* and fathead minnow (*Pimephales promelas*) for a period of three (3) consecutive months.

(2) If the three (3) monthly tests demonstrate no toxicity with any test species as described in Part I.D.1.f., the TRE will be considered successful. Otherwise, the TRE study must be continued.

(3) The post-TRE toxicity tests must be conducted in accordance with the procedures in Part I.D.1. The results of these tests must be submitted as part of the final TRE Report required under Part I.D.2.d.

(4) After successful completion of the TRE, the permittee must resume the chronic toxicity tests required in Part I.D.1. The permittee may reduce the number of species tested to only include the species demonstrated to be most sensitive to the toxicity in the effluent. The established starting date for the frequency in Part I.D.1.d. is the first day of the first month following successful completion of the post-TRE toxicity tests.

d. Reporting

(1) Progress reports must be submitted every 90 days to the Compliance Data Section beginning six (6) months from the date of two (2) consecutive failed toxicity tests. Each TRE progress report must include a listing of proposed activities for the next quarter and a schedule to reduce toxicity in the effluent discharge to acceptable levels through control of the toxicant source or treatment of whole effluent.

(2) Within 90 days of successfully completing the TRE, including the three (3) consecutive monthly tests required as part of the post-TRE toxicity testing requirements in Part I.D.2.c., the permittee must submit to the Compliance Data Section a final TRE Report that includes the following:

(A) A discussion of the TRE results;

(B) The starting date established under Part I.D.2.c.(4) for the continuation of the toxicity testing required in Part I.D.1.; and

(C) If applicable, the intent to reduce the number of species tested to the one most sensitive to the toxicity in the effluent under Part I.D.2.c.(4).

e. Compliance Date

The permittee must complete items a., b., c. and d. from Part I.D.2. and reduce toxicity in the effluent discharge to acceptable levels as soon as possible, but <u>no later than three (3) years from the date that toxicity is initially demonstrated in two (2) consecutive toxicity tests (i.e. the date of termination of the second test) as described in Part I.D.1.f.(4).</u>

E. REOPENING CLAUSES

This permit may be modified, or alternately, revoked and reissued, after public notice and opportunity for hearing:

1. to comply with any applicable effluent limitation or standard issued or approved under 301(b)(2)(C),(D) and (E), 304 (b)(2), and 307(a)(2) of the Clean Water Act, if the effluent limitation or standard so issued or approved:

    a. contains different conditions or is otherwise more stringent than any effluent limitation in the permit; or

    b. controls any pollutant not limited in the permit.

2. for any of the causes listed under 327 IAC 5-2-16.

3. to include whole effluent toxicity limitations or to include limitations for specific toxicants if the results of the biomonitoring and/or the TRE study indicate that such limitations are necessary to meet Indiana Water Quality Standards.

4. to include a case-specific Limit of Detection (LOD) and/or Limit of Quantitation (LOQ). The permittee must demonstrate that such action is warranted in accordance with the procedures specified under Appendix B, 40 CFR Part 136, using the most sensitive analytical methods approved by EPA under 40 CFR Part 136, or approved by the Commissioner.

5. to include Stormwater Monitoring and Non-Numeric Effluent Limits and Stormwater Pollution Prevention Plan (SWPPP) requirements if the permittee doesn’t apply for and/or is not granted coverage for conditional no exposure at the facility.

PART II

STANDARD CONDITIONS FOR NPDES PERMITS

A. GENERAL CONDITIONS

1. Duty to Comply

The permittee shall comply with all terms and conditions of this permit in accordance with 327 IAC 5-2-8(1) and all other requirements of 327 IAC 5-2-8. Any permit noncompliance constitutes a violation of the Clean Water Act and IC 13 and is grounds for enforcement action or permit termination, revocation and reissuance, modification, or denial of a permit renewal application.

It shall not be a defense for a permittee in an enforcement action that it would have been necessary to halt or reduce the permitted activity in order to maintain compliance with the conditions of the permit.

2. Duty to Mitigate

In accordance with 327 IAC 5-2-8(3), the permittee shall take all reasonable steps to minimize or correct any adverse impact to the environment resulting from noncompliance with this permit. During periods of noncompliance, the permittee shall conduct such accelerated or additional monitoring for the affected parameters, as appropriate or as requested by IDEM, to determine the nature and impact of the noncompliance.

3. Duty to Reapply

If the permittee wishes to continue an activity regulated by this permit after the expiration date of this permit, the permittee must obtain and submit an application for renewal of this permit in accordance with 327 IAC 5-2-8(2). It is the permittee's responsibility to obtain and submit the application. In accordance with 327 IAC 5-2-3(c), the owner of the facility or operation from which a discharge of pollutants occurs is responsible for applying for and obtaining the NPDES permit, except where the facility or operation is operated by a person other than an employee of the owner in which case it is the operator's responsibility to apply for and obtain the permit. Pursuant to 327 IAC 5-3-2(a)(2), the application must be submitted at least 180 days before the expiration date of this permit. This deadline may be extended if all of the following occur:

a. permission is requested in writing before such deadline;

b. IDEM grants permission to submit the application after the deadline; and

c. the application is received no later than the permit expiration date.

4. Permit Transfers

In accordance with 327 IAC 5-2-8(4)(D), this permit is nontransferable to any person except in accordance with 327 IAC 5-2-6(c). This permit may be transferred to another person by the permittee, without modification or revocation and reissuance being required under 327 IAC 5-2-16(c)(1) or 16(e)(4), if the following occurs:

a. the current permittee notified the Commissioner at least thirty (30) days in advance of the proposed transfer date;

b. a written agreement containing a specific date of transfer of permit responsibility and coverage between the current permittee and the transferee (including acknowledgment that the existing permittee is liable for violations up to that date, and the transferee is liable for violations from that date on) is submitted to the Commissioner;

c. the transferee certifies in writing to the Commissioner their intent to operate the facility without making such material and substantial alterations or additions to the facility as would significantly change the nature or quantities of pollutants discharged and thus constitute cause for permit modification under 327 IAC 5-2-16(d). However, the Commissioner may allow a temporary transfer of the permit without permit modification for good cause, e.g., to enable the transferee to purge and empty the facility's treatment system prior to making alterations, despite the transferee's intent to make such material and substantial alterations or additions to the facility; and

d. the Commissioner, within thirty (30) days, does not notify the current permittee and the transferee of the intent to modify, revoke and reissue, or terminate the permit and to require that a new application be filed rather than agreeing to the transfer of the permit.

The Commissioner may require modification or revocation and reissuance of the permit to identify the new permittee and incorporate such other requirements as may be necessary under the Clean Water Act or state law.

5. Permit Actions

a. In accordance with 327 IAC 5-2-16(b) and 327 IAC 5-2-8(4), this permit may be modified, revoked and reissued, or terminated for cause, including, but not limited to, the following:

(1) Violation of any terms or conditions of this permit;

(2) Failure of the permittee to disclose fully all relevant facts or misrepresentation of any relevant facts in the application, or during the permit issuance process; or

(3) A change in any condition that requires either a temporary or a permanent reduction or elimination of any discharge controlled by the permit, e.g., plant closure, termination of discharge by connection to a POTW, a change in state law that requires the reduction or elimination of the discharge, or information indicating that the permitted discharge poses a substantial threat to human health or welfare.

b. Filing of either of the following items does not stay or suspend any permit condition: (1) a request by the permittee for a permit modification, revocation and reissuance, or termination, or (2) submittal of information specified in Part II.A.3 of the permit including planned changes or anticipated noncompliance.

The permittee shall submit any information that the permittee knows or has reason to believe would constitute cause for modification or revocation and reissuance of the permit at the earliest time such information becomes available, such as plans for physical alterations or additions to the permitted facility that:

(1) could significantly change the nature of, or increase the quantity of pollutants discharged; or

(2) the commissioner may request to evaluate whether such cause exists.

c. In accordance with 327 IAC 5-1-3(a)(5), the permittee must also provide any information reasonably requested by the Commissioner.

6. Property Rights

Pursuant to 327 IAC 5-2-8(6) and 327 IAC 5-2-5(b), the issuance of this permit does not convey any property rights of any sort or any exclusive privileges, nor does it authorize any injury to persons or private property or invasion of other private rights, any infringement of federal, state, or local laws or regulations. The issuance of the permit also does not preempt any duty to obtain any other state, or local assent required by law for the discharge or for the construction or operation of the facility from which a discharge is made.

7. Severability

In accordance with 327 IAC 1-1-3, the provisions of this permit are severable and, if any provision of this permit or the application of any provision of this permit to any person or circumstance is held invalid, the invalidity shall not affect any other provisions or applications of the permit which can be given effect without the invalid provision or application.

8. Oil and Hazardous Substance Liability

Nothing in this permit shall be construed to relieve the permittee from any responsibilities, liabilities, or penalties to which the permittee is or may be subject to under Section 311 of the Clean Water Act.

9. State Laws

Nothing in this permit shall be construed to preclude the institution of any legal action or relieve the permittee from any responsibilities, liabilities, or penalties established pursuant to any applicable state law or regulation under authority preserved by Section 510 of the Clean Water Act or state law.

10. Penalties for Violation of Permit Conditions

Pursuant to IC 13-30-4, a person who violates any provision of this permit, the water pollution control laws; environmental management laws; or a rule or standard adopted by the Environmental Rules Board is liable for a civil penalty not to exceed twenty-five thousand dollars ($25,000) per day of any violation.

Pursuant to IC 13-30-5, a person who obstructs, delays, resists, prevents, or interferes with (1) the department; or (2) the department's personnel or designated agent in the performance of an inspection or investigation performed under IC 13-14-2-2 commits a class C infraction.

Pursuant to IC 13-30-10-1.5(e), a person who willfully or negligently violates any NPDES permit condition or filing requirement, or any applicable standards or limitations of IC 13-18-3-2.4, IC 13-18-4-5, IC 13-18-12, IC 13-18-14, IC 13-18-15, or IC 13-18-16, commits a Class A misdemeanor.

Pursuant to IC 13-30-10-1.5(i), an offense under IC 13-30-10-1.5(e) is a Level 4 felony if the person knowingly commits the offense and knows that the commission of the offense places another person in imminent danger of death or serious bodily injury. The offense becomes a Level 3 felony if it results in serious bodily injury to any person, and a Level 2 felony if it results in death to any person.

Pursuant to IC 13-30-10-1.5(g), a person who willfully or recklessly violates any applicable standards or limitations of IC 13-18-8 commits a Class B misdemeanor.

Pursuant to IC 13-30-10-1.5(h), a person who willfully or recklessly violates any applicable standards or limitations of IC 13-18-9, IC 13-18-10, or IC 13-18-10.5 commits a Class C misdemeanor.

Pursuant to IC 13-30-10-1, a person who knowingly or intentionally makes any false material statement, representation, or certification in any NPDES form, notice, or report commits a Class B misdemeanor.

11. Penalties for Tampering or Falsification

In accordance with 327 IAC 5-2-8(10), the permittee shall comply with monitoring, recording, and reporting requirements of this permit. The Clean Water Act, as well as IC 13-30-10-1, provides that any person who knowingly or intentionally (a) destroys, alters, conceals, or falsely certifies a record, (b) tampers with, falsifies, or renders inaccurate or inoperative a recording or monitoring device or method, including the data gathered from the device or method, or (c) makes a false material statement or representation in any label, manifest, record, report, or other document; all required to be maintained under the terms of a permit issued by the department commits a Class B misdemeanor.

12. Toxic Pollutants

If any applicable effluent standard or prohibition (including any schedule of compliance specified in such effluent standard or prohibition) is established under Section 307(a) of the Clean Water Act for a toxic pollutant injurious to human health, and that standard or prohibition is more stringent than any limitation for such pollutant in this permit, this permit shall be modified or revoked and reissued to conform to the toxic effluent standard or prohibition in accordance with 327 IAC 5-2-8(5). Effluent standards or prohibitions established under Section 307(a) of the Clean Water Act for toxic pollutants injurious to human health are effective and must be complied with, if applicable to the permittee, within the time provided in the implementing regulations, even absent permit modification.

13. Wastewater treatment plant and certified operators

The permittee shall have the wastewater treatment facilities under the responsible charge of an operator certified by the Commissioner in a classification corresponding to the classification of the wastewater treatment plant as required by IC 13-18-11-11 and 327 IAC 5-22. In order to operate a wastewater treatment plant the operator shall have qualifications as established in 327 IAC 5-22-7.

327 IAC 5-22-10.5(a) provides that a certified operator may be designated as being in responsible charge of more than one (1) wastewater treatment plant, if it can be shown that he will give adequate supervision to all units involved. Adequate supervision means that sufficient time is spent at the plant on a regular basis to assure that the certified operator is knowledgeable of the actual operations and that test reports and results are representative of the actual operations conditions. In accordance with 327 IAC 5-22-3(11), “responsible charge operator” means the person responsible for the overall daily operation, supervision, or management of a wastewater facility.

Pursuant to 327 IAC 5-22-10(4), the permittee shall notify IDEM when there is a change of the person serving as the certified operator in responsible charge of the wastewater treatment facility. The notification shall be made no later than thirty (30) days after a change in the operator.

14. Construction Permit

In accordance with IC 13-14-8-11.6, a discharger is not required to obtain a state permit for the modification or construction of a water pollution treatment or control facility if the discharger has an effective NPDES permit.

If the discharger modifies their existing water pollution treatment or control facility or constructs a new water pollution treatment or control facility for the treatment or control of any new influent pollutant or increased levels of any existing pollutant, then, within thirty (30) days after commencement of operation, the discharger shall file with the Department of Environment Management a notice of installation for the additional pollutant control equipment and a design summary of any modifications.

The notice and design summary shall be sent to the Office of Water Quality, Industrial NPDES Permits Section, 100 North Senate Avenue, Indianapolis, IN 46204-2251.

15. Inspection and Entry

In accordance with 327 IAC 5-2-8(8), the permittee shall allow the Commissioner, or an authorized representative, (including an authorized contractor acting as a representative of the Commissioner) upon the presentation of credentials and other documents as may be required by law, to:

a. Enter upon the permittee's premises where a regulated facility or activity is located or conducted, or where records must be kept pursuant to the conditions of this permit;

b. Have access to and copy, at reasonable times, any records that must be kept under the terms and conditions of this permit;

c. Inspect at reasonable times any facilities, equipment or methods (including monitoring and control equipment), practices, or operations regulated or required pursuant to this permit; and

d. Sample or monitor at reasonable times, any discharge of pollutants or internal wastestreams for the purposes of evaluating compliance with the permit or as otherwise authorized.

16. New or Increased Discharge of Pollutants

This permit prohibits the permittee from undertaking any action that would result in a new or increased discharge of a bioaccumulative chemical of concern (BCC) or a new or increased permit limit for a regulated pollutant that is not a BCC unless one of the following is completed prior to the commencement of the action:

a. Information is submitted to the Commissioner demonstrating that the proposed new or increased discharges will not cause a significant lowering of water quality as defined under 327 IAC 2-1.3-2(50). Upon review of this information, the Commissioner may request additional information or may determine that the proposed increase is a significant lowering of water quality and require the submittal of an antidegradation demonstration.

b. An antidegradation demonstration is submitted to and approved by the Commissioner in accordance with 327 IAC 2-1.3-5 and 327 IAC 2-1.3-6.

B. MANAGEMENT REQUIREMENTS

1. Proper Operation and Maintenance

The permittee shall at all times maintain in good working order and efficiently operate all facilities and systems (and related appurtenances) for the collection and treatment which are installed or used by the permittee and which are necessary for achieving compliance with the terms and conditions of this permit in accordance with 327 IAC 5-2-8(9).

Neither 327 IAC 5-2-8(9), nor this provision, shall be construed to require the operation of installed treatment facilities that are unnecessary for achieving compliance with the terms and conditions of the permit.

2. Bypass of Treatment Facilities

Pursuant to 327 IAC 5-2-8(12), the following are requirements for bypass:

a. The following definitions:

(1) “Bypass” means the intentional diversion of a waste stream from any portion of a treatment facility.

(2) “Severe property damage” means substantial physical damage to property, damage to the treatment facilities which would cause them to become inoperable, or substantial and permanent loss of natural resources which can reasonably be expected to occur in the absence of a bypass. Severe property damage does not mean economic loss caused by delays in production.

b. The permittee may allow a bypass to occur that does not cause a violation of the effluent limitations contained in this permit, but only if it is also for essential maintenance to assure efficient operation. These bypasses are not subject to Part II.B.2.c. and d.

c. The permittee must provide the Commissioner with the following notice:

(1) If the permittee knows or should have known in advance of the need for a bypass (anticipated bypass), it shall submit prior written notice. If possible, such notice shall be provided at least ten (10) days before the date of the bypass for approval by the Commissioner.

(2) As required by 327 IAC 5-2-8(11)(C), the permittee shall orally report an unanticipated bypass that exceeds any effluent limitations in the permit within twenty-four (24) hours from the time the permittee becomes aware of such noncompliance. A written submission shall also be provided within five (5) days of the time the permittee becomes aware of the circumstances. The written submission shall contain a description of the noncompliance and its cause; the period of noncompliance, including exact dates and times; and if the cause of noncompliance has not been corrected, the anticipated time it is expected to continue; and steps taken or planned to reduce, eliminate and prevent recurrence of the noncompliance. If a complete report is submitted by e-mail within 24 hours of the noncompliance, then that e-mail report will satisfy both the oral and written reporting requirement. E-mails should be sent to wwreports@idem.in.gov.

d. The following provisions are applicable to bypasses:

(1) Except as provided by Part II.B.2.b., bypass is prohibited, and the Commissioner may take enforcement action against a permittee for bypass, unless the following occur:

(A) Bypass was unavoidable to prevent loss of life, personal injury, or severe property damage.

(B) There were no feasible alternatives to the bypass, such as the use of auxiliary treatment facilities, retention of untreated wastes, or maintenance during normal periods of equipment down time. This condition is not satisfied if adequate back-up equipment should have been installed in the exercise of reasonable engineering judgment to prevent a bypass that occurred during normal periods of equipment downtime or preventive maintenance.

(C) The permittee submitted notices as required under Part II.B.2.c.

(2) The Commissioner may approve an anticipated bypass, after considering its adverse effects, if the Commissioner determines that it will meet the conditions listed above in Part II.B.2.d.(1). The Commissioner may impose any conditions determined to be necessary to minimize any adverse effects.

e. Bypasses that result in death or acute injury or illness to animals or humans must be reported in accordance with the "Spill Response and Reporting Requirements" in 327 IAC 2-6.1, including calling 888/233-7745 as soon as possible, but within two (2) hours of discovery. However, under 327 IAC 2-6.1-3(1), when the constituents of the bypass are regulated by this permit, and death or acute injury or illness to animals or humans does not occur, the reporting requirements of 327 IAC 2-6.1 do not apply.

3. Upset Conditions

Pursuant to 327 IAC 5-2-8(13):

a. "Upset" means an exceptional incident in which there is unintentional and temporary noncompliance with technology-based permit effluent limitations because of factors beyond the reasonable control of the permittee. An upset does not include noncompliance to the extent caused by operational error, improperly designed treatment facilities, inadequate treatment facilities, lack of preventive maintenance, or careless or improper operation.

b. An upset shall constitute an affirmative defense to an action brought for noncompliance with such technology-based permit effluent limitations if the requirements of Paragraph c of this section, are met.

c. A permittee who wishes to establish the affirmative defense of upset shall demonstrate, through properly signed, contemporaneous operating logs or other relevant evidence, that:

(1) An upset occurred and the permittee has identified the specific cause(s) of the upset;

(2) The permitted facility was at the time being properly operated;

(3) The permittee complied with any remedial measures required under Part II.A.2; and

(4) The permittee submitted notice of the upset as required in the "Twenty-Four Hour Reporting Requirements," Part II.C.3, or 327 IAC 2-6.1, whichever is applicable. However, under 327 IAC 2-6.1-3(1), when the constituents of the discharge are regulated by this permit, and death or acute injury or illness to animals or humans does not occur, the reporting requirements of 327 IAC 2-6.1 do not apply.

d. In any enforcement proceeding, the permittee seeking to establish the occurrence of an upset has the burden of proof pursuant to 40 CFR 122.41(n)(4).

4. Removed Substances

Solids, sludges, filter backwash, or other pollutants removed from or resulting from treatment or control of wastewaters shall be disposed of in a manner such as to prevent any pollutant from such materials from entering waters of the State and to be in compliance with all Indiana statutes and regulations relative to liquid and/or solid waste disposal. The discharge of pollutants in treated wastewater is allowed in compliance with the applicable effluent limitations in Part I. of this permit.

C. REPORTING REQUIREMENTS

1. Planned Changes in Facility or Discharge

Pursuant to 327 IAC 5-2-8(11)(F), the permittee shall give notice to the Commissioner as soon as possible of any planned physical alterations or additions to the permitted facility. In this context, permitted facility refers to a point source discharge, not a wastewater treatment facility. Notice is required only when either of the following applies:

a. The alteration or addition may meet one of the criteria for determining whether the facility is a new source as defined in 327 IAC 5-1.5.

b. The alteration or addition could significantly change the nature of, or increase the quantity of, pollutants discharged. This notification applies to pollutants that are subject neither to effluent limitations in Part I.A. nor to notification requirements in Part II.C.9. of this permit.

Following such notice, the permit may be modified to revise existing pollutant limitations and/or to specify and limit any pollutants not previously limited.

2. Monitoring Reports

Pursuant to 327 IAC 5-2-8(10) and 327 IAC 5-2-13 through 15, monitoring results shall be reported at the intervals and in the form specified in “Monthly Reporting”, Part I.C.2.

3. Twenty-Four Hour Reporting Requirements

Pursuant to 327 IAC 5-2-8(11)(C), the permittee shall orally report to the Commissioner information on the following types of noncompliance within 24 hours from the time permittee becomes aware of such noncompliance. If the noncompliance meets the requirements of item b (Part II.C.3.b) or 327 IAC 2-6.1, then the report shall be made within those prescribed time frames. However, under 327 IAC 2-6.1-3(1), when the constituents of the discharge that is in noncompliance are regulated by this permit, and death or acute injury or illness to animals or humans does not occur, the reporting requirements of 327 IAC 2-6.1 do not apply.

a. Any unanticipated bypass which exceeds any effluent limitation in the permit;

b. Any noncompliance which may pose a significant danger to human health or the environment. Reports under this item shall be made as soon as the permittee becomes aware of the noncomplying circumstances; or

c. Any upset (as defined in Part II.B.3 above) that causes an exceedance of any effluent limitation in the permit.

The permittee can make the oral reports by calling (317)232-8670 during regular business hours and asking for the Compliance Data Section or by calling (317) 233-7745 ((888)233-7745 toll free in Indiana) during non-business hours. A written submission shall also be provided within 5 days of the time the permittee becomes aware of the circumstances. The written submission shall contain a description of the noncompliance and its cause; the period of noncompliance, including exact dates and times, and, if the noncompliance has not been corrected, the anticipated time it is expected to continue; and steps taken or planned to reduce and eliminate the noncompliance and prevent its recurrence. The Commissioner may waive the written report on a case-by-case basis if the oral report has been received within 24 hours. Alternatively the permittee may submit a "Bypass/Overflow Report" (State Form 48373) or a "Noncompliance 24-Hour Notification Report" (State Form 52415), whichever is appropriate, to IDEM at (317) 232-8637 or wwreports@idem.in.gov. If a complete e-mail submittal is sent within 24 hours of the time that the permittee became aware of the occurrence, then the email report will satisfy both the oral and written reporting requirements.

4. Other Compliance/Noncompliance Reporting

Pursuant to 327 IAC 5-2-8(11)(D), the permittee shall report any instance of noncompliance not reported under the "Twenty-Four Hour Reporting Requirements" in Part II.C.3, or any compliance schedules at the time the pertinent Discharge Monitoring Report is submitted. The report shall contain the information specified in Part II.C.3;

The permittee shall also give advance notice to the Commissioner of any planned changes in the permitted facility or activity which may result in noncompliance with permit requirements; and

All reports of compliance or noncompliance with, or any progress reports on, interim and final requirements contained in any compliance schedule of this permit shall be submitted no later than 14 days following each schedule date.

5. Other Information

Pursuant to 327 IAC 5-2-8(11)(E), where the permittee becomes aware of a failure to submit any relevant facts or submitted incorrect information in a permit application or in any report, the permittee shall promptly submit such facts or corrected information to the Commissioner.

6. Signatory Requirements

Pursuant to 327 IAC 5-2-22 and 327 IAC 5-2-8(15):

a. All reports required by the permit and other information requested by the Commissioner shall be signed and certified by a person described below or by a duly authorized representative of that person:

(1) For a corporation: by a responsible corporate officer. A "responsible corporate officer" means either of the following:

(A) A president, secretary, treasurer, any vice president of the corporation in charge of a principal business function, or any other person who performs similar policymaking or decision making functions for the corporation; or

(B) The manager of one (1) or more manufacturing, production, or operating facilities provided the manager is authorized to make management decisions that govern the operation of the regulated facility including having the explicit or implicit duty to make major capital investment recommendations, and initiating and directing other comprehensive measures to assure long-term environmental compliance with environmental laws and regulations; the manager can ensure that the necessary systems are established or actions taken to gather complete and accurate information for permit application requirements; and where authority to sign documents has been assigned or delegated to the manager in accordance with corporate procedures.

(2) For a partnership or sole proprietorship: by a general partner or the proprietor, respectively; or

(3) For a Federal, State, or local governmental body or any agency or political subdivision thereof: by either a principal executive officer or ranking elected official.

b. A person is a duly authorized representative only if:

(1) The authorization is made in writing by a person described above.

(2) The authorization specifies either an individual or a position having responsibility for the overall operation of the regulated facility or activity, such as the position of plant manager, operator of a well or a well field, superintendent, or position of equivalent responsibility. (A duly authorized representative may thus be either a named individual or any individual occupying a named position.); and

(3) The authorization is submitted to the Commissioner.

c. Electronic Signatures. If documents described in this section are submitted electronically by or on behalf of the NPDES-regulated facility, any person providing the electronic signature for such documents shall meet all relevant requirements of this section, and shall ensure that all of the relevant requirements of 40 CFR part 3 (including, in all cases, subpart D to part 3) (Cross-Media Electronic Reporting) and 40 CFR part 127 (NPDES Electronic Reporting Requirements) are met for that submission.

d. Certification. Any person signing a document identified under Part II.C.6., shall make the following certification:

"I certify under penalty of law that this document and all attachments were prepared under my direction or supervision in accordance with a system designed to assure that qualified personnel properly gather and evaluate the information submitted. Based on my inquiry of the person or persons who manage the system, or those persons directly responsible for gathering the information, the information submitted is, to the best of my knowledge and belief, true, accurate, and complete. I am aware that there are significant penalties for submitting false information, including the possibility of fine and imprisonment for knowing violations."

7. <u>Availability of Reports</u>

Except for data determined to be confidential under 327 IAC 12.1, all reports prepared in accordance with the terms of this permit shall be available for public inspection at the offices of the Indiana Department of Environmental Management and the Regional Administrator. As required by the Clean Water Act, permit applications, permits, and effluent data shall not be considered confidential.

8. Penalties for Falsification of Reports

IC 13-30 and 327 IAC 5-2-8(15) provides that any person who knowingly makes any false statement, representation, or certification in any record or other document submitted or required to be maintained under this permit, including monitoring reports or reports of compliance, shall, upon conviction, be punished by a fine of not more than $10,000 per violation, or by imprisonment for not more than 180 days per violation, or by both.

9. Changes in Discharge of Toxic Substances

Pursuant to 327 IAC 5-2-9, the permittee shall notify the Commissioner as soon as it knows or has reason to know:

a. That any activity has occurred or will occur which would result in the discharge of any toxic pollutant that is not limited in the permit if that discharge will exceed the highest of the following notification levels.

(1) One hundred micrograms per liter (100 µg/l);

(2) Two hundred micrograms per liter (200 µg/l) for acrolein and acrylonitrile; five hundred micrograms per liter (500 µg/l) for 2,4-dinitrophenol and 2-methyl-4,6-dinitrophenol; and one milligram per liter (1 mg/l) for antimony;

(3) Five (5) times the maximum concentration value reported for that pollutant in the permit application in accordance with 40 CFR 122.21(g)(7); or

(4) A notification level established by the Commissioner on a case-by-case basis, either at the Commissioner's own initiative or upon a petition by the permittee. This notification level may exceed the level specified in subdivisions (1), (2), or (3) but may not exceed the level which can be achieved by the technology-based treatment requirements applicable to the permittee under the CWA (see 327 IAC 5-5-2).

b. That it has begun or expects to begin to use or manufacture, as an intermediate or final product or byproduct, any toxic pollutant that was not reported in the permit application under 40 CFR 122.21(g)(9). However, this subsection b. does not apply to the permittee's use or manufacture of a toxic pollutant solely under research or laboratory conditions.

10. Future Electronic Reporting Requirements

IDEM is currently developing the technology and infrastructure necessary to allow compliance with the EPA Phase 2 e-reporting requirements per 40 CFR 127.16 and to allow electronic reporting of applications, notices, plans, reports, and other information not covered by the federal e-reporting regulations. IDEM will notify the permittee when IDEM's e-reporting system is ready for use for one or more applications, notices, plans, reports, or other information. This IDEM notice will identify the specific applications, notices, plans, reports, or other information that are to be submitted electronically and the permittee will be required to use the IDEM electronic reporting system to submit the identified application(s), notice(s), plan(s), report(s), or other information. See Part I.C.2. of this permit for the current electronic reporting requirements for the submittal of monthly monitoring reports such as the Discharge Monitoring Report (DMR) and the Monthly Monitoring Report (MMR).

National Pollutant Discharge Elimination System
Briefing Memo for
Iroquois Bio-Energy Co., LLC
Draft: September 2021

Indiana Department of Environmental Management
100 North Senate Avenue
Indianapolis, Indiana 46204
(317) 232-8603
Toll Free (800) 451-6027
www.idem.IN.gov

Permittee:	Iroquois Bio-Energy Co., LLC 751 West State Road 114 Rensselaer, IN, 47978
Existing Permit Information:	Permit Number: IN0062707 Expiration Date: 12/31/2021
Facility Contact:	Jennifer Wunsh, Environmental Health & Safety Manager (219) 866-2937, jwunsh@ibecethanol.com
Facility Location:	751 West State Road 114 Rensselaer, IN Jasper County
Receiving Stream(s):	Sage Ditch
GLI/Non-GLI:	Non-GLI
Proposed Permit Action:	Renewal
Date Application Received:	July 19, 2021
Source Category	NPDES Minor – Industrial
Permit Writer:	Ms. Devery J. DeBoy, Environmental Manager (317) 232-8701, DDeboy@idem.IN.gov

Table of Contents

1.0 Introduction 3
2.0 Facility Description 3
2.1 General 3
2.2 Outfall Locations 4
2.3 Wastewater Treatment 4
2.4 Changes in Operation 6
2.5 Facility Stormwater 6
3.0 Permit History 6
3.1 Compliance History 6
4.0 Location Of Discharge/Receiving Water Use Designation 6
4.1 Total Maximum Daily Loads (TMDLs) 7
5.0 Permit Limitations 8
5.1 Technology-Based Effluent Limits (TBEL) 8
5.2 Water Quality-Based Effluent Limits 8
5.3 Effluent Limitations and Monitoring Requirements by Outfall 9
5.4 Whole Effluent Toxicity (WET) Testing 10
5.5 Antibacksliding 10
5.6 Antidegradation 10
5.7 Stormwater 11
5.8 Water Treatment Additives 11
6.0 Permit Draft Discussion 12
6.1 Discharge Limitations, Monitoring Conditions and Rationale 12
6.2 Schedule of Compliance 12
6.3 Special Conditions and Other Permit Requirements 12
6.4 Spill Response and Reporting Requirement 13
6.5 Permit Processing/Public Comment 13

1.0 INTRODUCTION

The Indiana Department of Environmental Management (IDEM) received a National Pollutant Discharge Elimination System (NPDES) Permit application from Iroquois Bio-Energy Co., LLC on July 19, 2021. In accordance with 327 IAC 5-2-6(a), the current five year permit was issued with an effective date of January 1, 2017. A five year permit is proposed in accordance with 327 IAC 5-2-6(a).

The Federal Water Pollution Control Act (more commonly known as the Clean Water Act), as amended, (Title 33 of the United States Code (U.S.C.) Section 1251 *et seq.*), requires an NPDES permit for the discharge of pollutants into surface waters. Furthermore, Indiana law requires a permit to control or limit the discharge of any contaminants into state waters or into a publicly owned treatment works. This proposed permit action by IDEM complies with and implements these federal and state requirements.

In accordance with Title 40 of the Code of Federal Regulations (CFR) Section 124.7, as well as Title 327 of the Indiana Administrative Code (IAC) 327 Article 5-3-7, a Statement of Basis, or Briefing Memo, is required for certain NPDES permits. This document fulfills the requirements established in these regulations. This Briefing Memo was prepared in order to document the factors considered in the development of NPDES Permit effluent limitations. The technical basis for the Briefing Memo may consist of evaluations of promulgated effluent guidelines, existing effluent quality, receiving water conditions, Indiana water quality standards-based wasteload allocations, and other information available to IDEM. Decisions to award variances to Water Quality Standards or promulgated effluent guidelines are justified in the Briefing Memo where necessary.

2.0 FACILITY DESCRIPTION

2.1 General

Iroquois Bio-Energy Co., LLC is classified under Standard Industrial Classification (SIC) Code 2869-Industrial Organic Chemicals.

The facility manufactures anhydrous, fuel-grade ethanol using corn and small amounts of waste alcohol as feedstocks through a dry-mill process. The corn kernel is milled into flour, and the starch from the flour is converted to ethanol during the fermentation process. In addition to ethanol, the facility produces corn oil and dried distillers as co-products. The discharge from the facility consists of reverse osmosis (RO) reject, cooling tower blowdown, filter backwash, and water softener regeneration wastewater.

The source water for the facility is well water.

A map showing the location of the facility has been included as Figure 1.

Figure 1: Facility Location

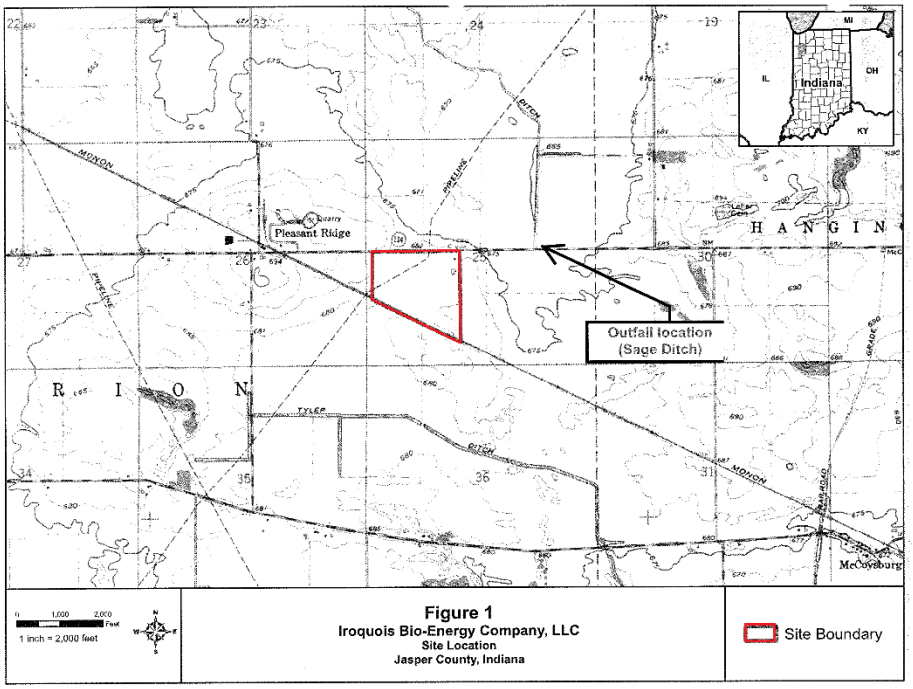

751 West State Road 114
Rensselaer, Indiana 47978 – Jasper County

2.2 Outfall Locations

Outfall 001	Latitude: 40º 56’ 2” Longitude: -87º 3’ 3”

2.3 Wastewater Treatment

Source water is provided by on-site wells. The facility has an unlined surface impoundment that receives the wastewater from reverse osmosis (RO) reject (40 gpm), water softener regeneration (36 gpm), cooling tower blowdown (82 gpm), and multimedia filter backwash (180 gpm). The basin has an approximate volume of 40,000 cubic ft and holds approximately 0.149 million gallons.

The facility has an average discharge of approximately 0.0967 MGD. A Water Balance Diagram has been included as Figure 2.

Figure 2: Water Balance Diagram

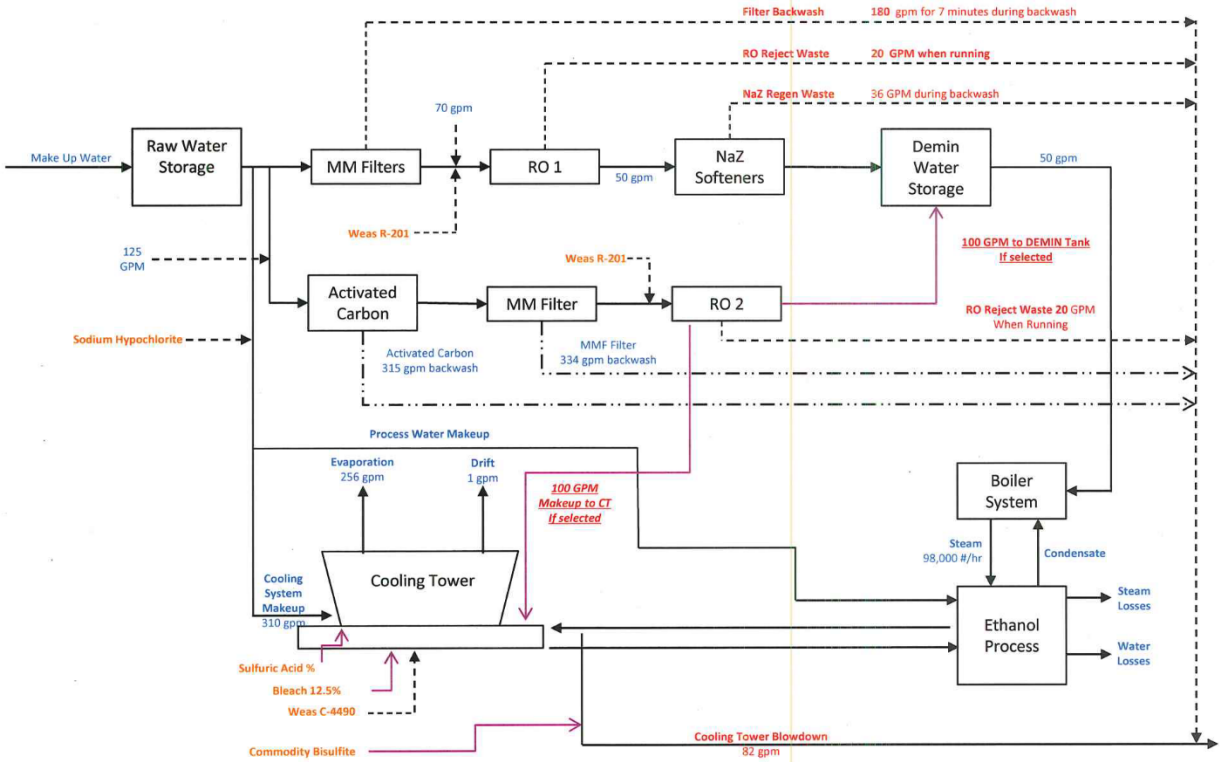

Outfall 001: The average daily discharge from Outfall 001 to Sage Ditch is 0.0967 MGD. The design flow (highest monthly average) based on the most recent 2 years of data is 0.121 MGD.

The permittee shall have the wastewater treatment facilities under the responsible charge of an operator certified by the Commissioner in a classification corresponding to the classification of the wastewater treatment plant as required by IC 13-18-11-11 and 327 IAC 5-22-5. In order to operate a wastewater treatment plant the operator shall have qualifications as established in 327 IAC 5-22-7.

IDEM has determined that the permittee doesn't qualify for an industrial wastewater treatment plant classification because the wastewater is not treated prior to discharge.

2.4 Changes in Operation

In the permit application, no changes in operation were identified as occurring since the previous permit renewal.

2.5 Facility Stormwater

During a previous NPDES permit cycle, the permittee applied for and received a conditional exclusion from storm water permitting based on “no exposure” of industrial activities. The exemption is dated 11/16/2006 and was assigned the permit # INR23X049. However, the exemption has since expired as of 2016, and the permittee must re-apply for the conditional exclusion from storm water permitting through IDEM’s Storm Water Permitting section for continued exemption.

3.0 PERMIT HISTORY

3.1 Compliance History

The purpose of this section is to summarize any violations and enforcement actions associated with the permit.

A review of this facility’s discharge monitoring data was conducted for compliance verification. This review indicates the following permit limitation violations at Outfall 001 between June 2019 and June 2021; 1 WETT and 1 Chloride. There are no pending or current enforcement actions regarding this NPDES permit.

4.0 LOCATION OF DISCHARGE/RECEIVING WATER USE DESIGNATION

The receiving stream for Outfall 001 is Sage Ditch. The $Q_{7,10}$ low flow value of Sage Ditch is 0.0 cfs and shall be capable of supporting a well-balanced, warm water aquatic community and full body contact recreation in accordance with 327 IAC 2-1-3.

The permittee discharges to a waterbody that has been identified as a water of the state that is not within the Great Lakes system. Therefore it is subject to NPDES requirements specific to dischargers not discharging to waters within the Great Lakes system under 327 IAC 2-1 and 327 IAC 5-2-11.1. These rules contain applicable water quality standards and the procedures to calculate and incorporate water quality-based effluent limitations.

A Site Map has been included as Figure 3.

Figure 3: Site Map

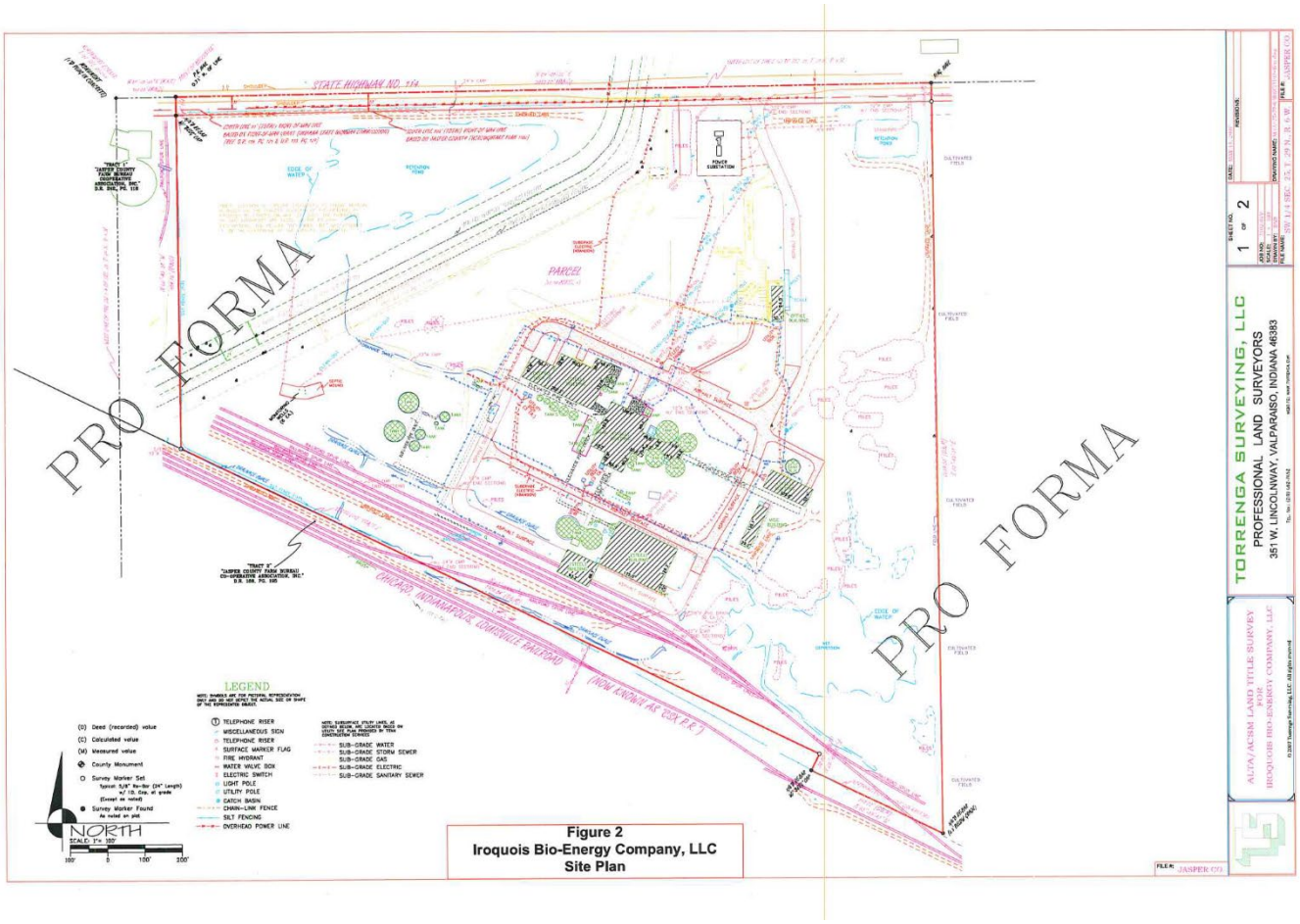

4.1 Total Maximum Daily Loads (TMDLs)

Section 303(d) of the Clean Water Act requires states to identify waters, through their Section 305(b) water quality assessments, that do not or are not expected to meet applicable water quality standards with federal technology based standards alone. States are also required to develop a priority ranking for these waters taking into account the severity of the pollution and the designated uses of the waters. Once this listing and ranking of impaired waters is completed, the states are required to develop Total Maximum Daily Loads (TMDLs) for these waters in order to achieve compliance with the water quality standards. Indiana's 2020 303(d) List of Impaired Waters was developed in accordance with Indiana's Water Quality Assessment and 303(d) Listing Methodology for Waterbody Impairments and Total Maximum Daily Load Development for the 2020 Cycle.

The Sage Ditch, Assessment-Unit INK0234_T1004, HUC 71200020304, is on the 2020 303(d) list for E.coli impairments. A TMDL for the Sage Ditch isn't currently planned.

5.0 PERMIT LIMITATIONS

5.1 Technology-Based Effluent Limits (TBEL)

TBELs require every individual member of a discharge class or category to operate their water pollution control technologies according to industry-wide standards and accepted engineering practices. TBELs are developed by applying the National Effluent Limitation Guidelines (ELGs) established by EPA for specific industrial categories. Technology-based treatment requirements established pursuant to sections 301(b) and 306 of the CWA represent the minimum level of control that must be imposed in an NPDES permit (327 IAC 5-5-2(a)).

In the absence of ELGs, TBELs can also be established on a case-by-case basis using best professional judgment (BPJ) in accordance with 327 IAC 5-2-10 and 327 IAC 5-5 (which implement 40 CFR 122.44, 125.3, and Section 402(a)(1) of the Clean Water Act (CWA)).

BEST PROFESSIONAL JUDGEMENT (BPJ)

EPA develops effluent limitation guidelines (ELGs) for existing industrial and commercial activities as directed in the 1972 amendments of the Clean Water Act. The federal effluent limitation guidelines and standards are located at 40 CFR 403 through 471, inclusive, and are incorporated into Indiana law at 327 IAC 5-2-1.5. In Indiana, NPDES permits are required to ensure compliance with these federal effluent limitation guidelines and standards under 327 IAC 5-2-10(a)(1), 327 IAC 5-2-10(a)(2), and 327 IAC 5-5-2. ELGs are technology-based effluent limitations (TBELs). The intent of a TBEL is to require a minimum level of treatment for industrial point sources based on currently available treatment technologies. Where EPA has not yet developed guidelines for a particular industry, best professional judgment (BPJ) may be used to develop case-by-case technology-based permit limitations under 327 IAC 5-5-2 and 5-2-10 (see also 40 CFR 122.44 and 125.3, and Section 402(a)(1) of the Clean Water Act).

ELGs have not yet been developed specifically for this type of discharge. Therefore, as provided by law, IDEM may establish TBELs in the proposed permit utilizing BPJ to meet the requirements of Best Conventional Pollutant Control Technology and Best Available Technology Economically Achievable (BCT/BAT).

5.2 Water Quality-Based Effluent Limits

WQBELs are designed to be protective of the beneficial uses of the receiving water and are independent of the available treatment technology. The WQBELs for this facility are based on water quality criteria in 327 IAC 2-1-6 or developed under the procedures described in 327 IAC 2-1-8.2 through 8.7 and 327 IAC 2-1-8.9, and implementation procedures in 327 IAC 5. Limitations are required for any parameter which has the reasonable potential to exceed a water quality criterion as determined using the procedures under 327 IAC 5-2-11.1(h).

5.3 Effluent Limitations and Monitoring Requirements by Outfall

Under 327 IAC 5-2-10(a) (see also 40 CFR 122.44), NPDES permit requirements are technology-based effluent limitations and standards (including technology-based effluent limitations (TBELs) based on federal effluent limitations guidelines or developed on a case-by-case basis using best professional judgment (BPJ), where applicable), water quality standards-based, or based on other more stringent requirements. The decision to limit or monitor the parameters contained in this permit is based on information contained in the permittee's NPDES application and other available information relating to the facility and the receiving waterbody as well as the applicable federal effluent limitations guidelines. In addition, when renewing a permit, the existing permit limits, the antibacksliding requirements under 327 IAC 5-2-10(a)(11), and the antidegradation requirements under 327 IAC 2-1.3 must be considered.

5.3.1 All External Outfalls (001)

Narrative Water Quality Based Limits

The narrative water quality criteria contained under 327 IAC 2-1-6(a)(1) and (2) have been included in this permit to ensure that these minimum water quality conditions are met.

Flow

The effluent flow is to be monitored in accordance with 327 IAC 5-2-13(a)(2).

5.3.2 Outfall (001)

pH

Discharges to waters of the state are limited to the range of 6.0-9.0 s.u., in accordance with 327 IAC 2-1-6(b)(2).

Temperature

Effluent Limitations for temperature are based on the criteria established in 327 IAC 2-1-6(b)(4).

Total Residual Chlorine (TRC)

The effluent limits for TRC have been retained from the previous permit. In accordance with 327 IAC 2-1-6, effluent limitations for TRC are 0.02 mg/l monthly average and 0.04 mg/l daily maximum.

Chloride & Sulfate

The effluent limitations for Sulfate and Chloride have been retained from the previous permit. The limits were established based on the Wasteload Allocation and Reasonable Potential to Exceed analysis (WLA001460, dated October 6, 2006) in accordance with 327 IAC 5-2-11.1(h). The limits for Sulfate are 948 mg/l monthly average and 1643 mg/l daily maximum. The limits for Chloride are 218 mg/l monthly average and 378 mg/l daily maximum.

5.4 Whole Effluent Toxicity (WET) Testing

Whole effluent toxicity (WET) test requirements are included in the NPDES permit to monitor compliance with the narrative water quality criteria under 327 IAC 2-1-6(a)(1)(E) and (a)(2). 327 IAC 2-1-6(a)(1)(E) requires all surface waters at all times and all places, including the mixing zone, to be free from substances, materials, etc. which are in amounts sufficient to be acutely toxic to or to otherwise severely injure or kill aquatic life, other animals, plants, or humans. 327 IAC 2-1-6(2) requires that all waters outside the mixing zone be free of substances in concentrations that on the basis of available scientific data are believed to be sufficient to injure, be chronically toxic to, or be carcinogenic, mutagenic, or teratogenic to humans, animals, aquatic life, or plants. In addition, under 327 IAC 5-2-11.1(h), IDEM is required to determine whether the discharge causes, or has the reasonable potential to cause or contribute to a violation of these narrative water quality criteria.

Therefore, the permittee is required to conduct WET tests to determine the toxicity of the final effluent. This does not negate the requirement to submit a water treatment additive (WTA) application and/or worksheet for replacement or new additives/chemicals proposed for use at the site.

5.5 Antibacksliding

Pursuant to 327 IAC 5-2-10(a)(11), unless an exception applies, a permit may not be renewed, reissued or modified to contain effluent limitations that are less stringent than the comparable effluent limitations in the previous permit. None of the limits included in this permit are less stringent than the comparable effluent limitations in the previous permit, therefore, backsliding is not an issue in accordance with 327 IAC 5-2-10(a)(11).

5.6 Antidegradation

Indiana's Antidegradation Standards and Implementation procedures are outlined in 327 IAC 2-1.3. The antidegradation standards established by 327 IAC 2-1.3-3 apply to all surface waters of the state. The permittee is prohibited from undertaking any deliberate action that would result in a new or increased discharge of a bioaccumulative chemical of concern (BCC) or a new or increased permit limit for a regulated pollutant that is not a BCC unless information is submitted to the commissioner demonstrating that the proposed new or increased discharge will not cause a significant lowering of water quality, or an antidegradation demonstration submitted and approved in accordance 327 IAC 2-1.3-5 and 2-1.3-6.

The NPDES permit does not propose to establish a new or increased loading of a regulated pollutant; therefore, the Antidegradation Implementation Procedures in 327 IAC 2-1.3-5 and 2-1.3-6 do not apply to the permitted discharge.

5.7 Stormwater

Due to their exemption under permit #INR23X049, storm water regulations do not apply to this facility.

5.8 Water Treatment Additives

In the event that changes are to be made in the use of water treatment additives that could significantly change the nature of, or increase the discharge concentration of any of the additives contributing to an outfall governed under the permit, the permittee must apply for and obtain approval from IDEM prior to such discharge. Discharges of any such additives must meet Indiana water quality standards. The permittee must apply for permission to use water treatment additives by completing and submitting State Form 50000 (Application for Approval to Use Water Treatment Additives) available at: https://www.in.gov/idem/forms/idem-agency-forms/ and submitting any needed supplemental information. In the review and approval process, IDEM determines, based on the information submitted with the application, whether the use of any new or changed water treatment additives/chemicals or dosage rates could potentially cause the discharge from any permitted outfall to cause chronic or acute toxicity in the receiving water.

The authority for this requirement can be found under one or more of the following: 327 IAC 5-2-8(11)(B), which generally requires advance notice of any planned changes in the permitted facility, any activity, or other circumstances that the permittee has reason to believe may result in noncompliance with permit requirements; 327 IAC 5-2-8(11)(F)(ii), which generally requires notice as soon as possible of any planned physical alterations or additions to the permitted facility if the alteration or addition could significantly change the nature of, or increase the quantity of, pollutants discharged; and 327 IAC 5-2-9(2) which generally requires notice as soon as the discharger knows or has reason to know that the discharger has begun or expects to begin to use or manufacture, as an intermediate or final product or byproduct, any toxic pollutant that was not reported in the permit application.

The following is a list of water treatment additives currently approved for use at the facility:

Supplier	WTA	Outfall	Purpose	Date of Approval
Weas Engineering, Inc	C-4490	001	Corrosion/Scale Inhibitor	January 11, 2021
Weas Engineering, Inc.	R-201	001	Scale Inhibitor	January 11, 2021
Univar	Sodium Bisulfite	001	Biodispersion	January 11, 2021
The Dow Chemical Co.	AQUCAR DB 20	001	Microbiocide	May 11, 2021
Oxbow Sulfur Inc.	Sulfuric Acid	001	pH control	October 28, 2016
Carus Corporation	Sodium Hypochlorite	001	Chlorine/ Disinfectant	October 28, 2016

6.0 PERMIT DRAFT DISCUSSION

6.1 Discharge Limitations, Monitoring Conditions and Rationale

The proposed final effluent limitations are based on the more stringent of the Indiana water quality-based effluent limitations (WQBELs), technology-based effluent limitations (TBELs), or approved total maximum daily loads (TMDLs) and NPDES regulations as appropriate for each regulated outfall. Section 5.3 of this document explains the rationale for the effluent limitations at each Outfall.

Analytical and sampling methods used shall conform to the version of 40 CFR 136 as referenced in 327 IAC 5-2-13(d)(1) and 327 IAC 5-2-1.5.

Nothing has changed to warrant modifying the monitoring conditions.

Outfall 001:

Parameter	Monthly Average	Daily Maximum	Units	Minimum Frequency	Sample Type
Flow	Report	Report	MGD	1 X Weekly	24-Hr. Total
TRC	0.02	0.04	mg/l	1 X Weekly	Grab
Chloride	218	378	mg/l	2 X Monthly	Grab
Sulfate	948	1643	mg/l	2 X Monthly	Grab
Temperature	Report	Report	°F	1 X Weekly	Grab
WETT	1.0	1.0	TU_c/TU_a	Semi-Annually	Grab

Parameter	Daily Minimum	Daily Maximum	Units	Minimum Frequency	Sample Type
pH	6.0	9.0	Std Units	1 X Weekly	Grab

6.2 Schedule of Compliance

The circumstances in this NPDES permit do not qualify for a schedule of compliance.

6.3 Special Conditions and Other Permit Requirements

There are no special conditions on this permit.

6.4 Spill Response and Reporting Requirement

Reporting requirements associated with the Spill Reporting, Containment, and Response requirements of 327 IAC 2-6.1 are included in Part II.B.2.(d), Part II.B.3.(c), and Part II.C.3. of the NPDES permit. Spills from the permitted facility meeting the definition of a spill under 327 IAC 2-6.1-4(15), the applicability requirements of 327 IAC 2-6.1-1, and the Reportable Spills requirements of 327 IAC 2-6.1-5 (other than those meeting an exclusion under 327 IAC 2-6.1-3 or the criteria outlined below) are subject to the Reporting Responsibilities of 327 IAC 2-6.1-7.

It should be noted that the reporting requirements of 327 IAC 2-6.1 do not apply to those discharges or exceedances that are under the jurisdiction of an applicable permit when the substance in question is covered by the permit and death or acute injury or illness to animals or humans does not occur. In order for a discharge or exceedance to be under the jurisdiction of this NPDES permit, the substance in question (a) must have been discharged in the normal course of operation from an outfall listed in this permit, and (b) must have been discharged from an outfall for which the permittee has authorization to discharge that substance.

6.5 Permit Processing/Public Comment

Pursuant to IC 13-15-5-1, IDEM will publish the draft permit document online at https://www.in.gov/idem/public-notices/. Additional information on public participation can be found in the "Citizens' Guide to IDEM", available at https://www.in.gov/idem/resources/citizens-guide-to-idem/. A 30-day comment period is available to solicit input from interested parties, including the public.