STATE OF INDIANA
DEPARTMENT OF ENVIRONMENTAL MANAGEMENT
PUBLIC NOTICE NO. 20210824 IN0063878 – D
DATE OF NOTICE: AUGUST 24, 2021
DATE RESPONSE DUE: SEPTEMBER 24, 2021

The Office of Water Quality proposes the following NPDES DRAFT PERMIT:

MINOR – RENEWAL

INGREDION INCORPORATED – INDIANAPOLIS PLANT, Permit No. IN0063878, MARION COUNTY, 1515 S Drover St, Indianapolis, IN. This industrial facility discharges 0.71 million gallons daily of stormwater and non-process wastewater to the West Fork of White River. Permit Manager: Richard Hamblin, 317/232-8696, Rhamblin@idem.in.gov. Posted online at https://www.in.gov/idem/public-notices/.

PROCEDURES TO FILE A RESPONSE

Draft can be viewed or copied (10¢ per page) at IDEM/OWQ NPDES PS, 100 North Senate Avenue, (Rm 1203) Indianapolis, IN, 46204 (east end elevators) from 9 – 4, Mon - Fri, (except state holidays). A copy of the Draft Permit is on file at the local County Health Department. Please tell others you think would be interested in this matter. For your rights & responsibilities see: Public Notices: https://www.in.gov/idem/public-notices/; Citizen Guide: https://www.in.gov/idem/resources/citizens-guide-to-idem/. Please tell others whom you think would be interested in this matter.

Response Comments: The proposed decision to issue a permit is tentative. Interested persons are invited to submit written comments on the Draft permit. All comments must be postmarked no later than the Response Date noted to be considered in the decision to issue a Final permit. Deliver or mail all requests or comments to the attention of the Permit Writer at the above address, (mail code 65-42 PS).

To Request a Public Hearing:

Any person may request a Public Hearing. A written request must be submitted to the above address on or before the Response Date noted. The written request shall include: the name and address of the person making the request, the interest of the person making the request, persons represented by the person making the request, the reason for the request and the issues proposed for consideration at the Hearing. IDEM will determine whether to hold a Public Hearing based on the comments and the rationale for the request. Public Notice of such a Hearing will be published in at least one newspaper in the geographical area of the discharge and sent to anyone submitting written comments and/or making such request and whose name is on the mailing list at least 30 days prior to the Hearing.

INDIANA DEPARTMENT OF ENVIRONMENTAL MANAGEMENT
We Protect Hoosiers and Our Environment.
100 N. Senate Avenue • Indianapolis, IN 46204
(800) 451-6027 • (317) 232-8603 • www.idem.IN.gov

Eric J. Holcomb
Governor

Bruno Pigott
Commissioner

August 24, 2021

VIA ELECTRONIC MAIL

Ms. Melissa Putman, Environmental Manager
Ingredion Incorporated
1515 S. Drover Street
Indianapolis, IN 46221

Dear Ms. Putman:

Re: NPDES Permit No. IN0063878
Draft Permit
Ingredion Incorporated Indianapolis Plant
Indianapolis, IN – Marion County

Your application and supporting documents have been reviewed and processed in accordance with rules adopted under 327 IAC 5. Enclosed is a copy of the draft NPDES Permit.

Pursuant to IC 13-15-5-1, IDEM will publish the draft permit document online at https://www.in.gov/idem/public-notices/. Additional information on public participation can be found in the "Citizens' Guide to IDEM", available at https://www.in.gov/idem/resources/citizens-guide-to-idem/. A 30-day comment period is available to solicit input from interested parties, including the public.

Please review this draft permit and associated documents carefully to become familiar with the proposed terms and conditions. Comments concerning the draft permit should be submitted in accordance with the procedure outlined in the enclosed public notice form. We suggest that you meet with us to discuss major concerns or objections you may have with the draft permit. Questions concerning this draft permit may be addressed to Richard Hamblin of my staff, at 317/232-8696 or rhamblin@idem.in.gov.

Sincerely,

Nikki Gardner

Nikki Gardner, Chief
Industrial NPDES Permits Section
Office of Water Quality

Enclosures
cc: Marion County Health Department
Andy Schmidt, IDEM

STATE OF INDIANA

DEPARTMENT OF ENVIRONMENTAL MANAGEMENT

AUTHORIZATION TO DISCHARGE UNDER THE

NATIONAL POLLUTANT DISCHARGE ELIMINATION SYSTEM

In compliance with the provisions of the Federal Water Pollution Control Act, as amended, (33 U.S.C. 1251 et seq., the "Clean Water Act" or "CWA"), and IDEM's authority under IC 13-15,

INGREDION INCORPORATED – INDIANAPOLIS PLANT

is authorized to discharge from the starch manufacturing facility that is located at 1515 South Drover Street, Indianapolis, Indiana, to receiving waters identified as the West Fork of the White River in accordance with effluent limitations, monitoring requirements, and other conditions set forth in Parts I and II hereof. This permit may be revoked for the nonpayment of applicable fees in accordance with IC 13-18-20.

Effective Date:_____

Expiration Date:_____

In order to receive authorization to discharge beyond the date of expiration, the permittee shall submit such information and forms as are required by the Indiana Department of Environmental Management no later than 180 days prior to the date of expiration.

Issued on _____ for the Indiana Department of Environmental Management.

Jerry Dittmer, Chief
Permits Branch
Office of Water Quality

PART I

A. EFFLUENT LIMITATIONS AND MONITORING REQUIREMENTS

1. The permittee is authorized to discharge storm water from the outfall listed below in accordance with the terms and conditions of this permit. The permittee is authorized to discharge from Outfall 001S, located at Latitude 39° 44' 28.78", Longitude -86° 10' 25". Samples taken in compliance with the monitoring requirements below shall be taken at a point representative of the discharge but prior to entry into West Fork of the White River. Such discharge shall be limited and monitored by the permittee as specified below:

DISCHARGE LIMITATIONS [1] [2] [3]

Outfall 001

Parameter	Daily Maximum	Units	Monitoring Requirements Measurement Frequency[4]	Sample Type
Flow[5]	Report	MGD	Annually	Estimate Total
Total Suspended Solids	Report	mg/l	Annually	Grab
pH	Report	s.u.	Annually	Grab
Oil & Grease	Report	mg/l	Annually	Grab
COD	Report	mg/l	Annually	Grab
$CBOD_5$	Report	mg/l	Annually	Grab
Total Kjeldahl Nitrogen	Report	mg/l	Annually	Grab
Nitrate plus Nitrite Nitrogen	Report	mg/l	Annually	Grab
Total Phosphorus	Report	mg/l	Annually	Grab

[1] The Storm Water Monitoring and Non Numeric Effluent Limits and the Storm Water Pollution Prevention Plan (SWPPP) requirements can be found in Part I.D. and I.E. of this permit.

[2] All samples shall be collected from the discharge resulting from a storm event that is greater than 0.1 inches and at least 72 hours from the previously measurable (greater than 0.1 inch rainfall) storm event. There shall be a minimum of three (3) months between reported sampling events.

For each sample taken, the permittee shall record the duration and total rainfall of the storm event, the number of hours between beginning of the storm measured and the end of the previous measurable rain event, and the outside temperature at the time of sampling.

A grab sample shall be taken during the first thirty (30) minutes of the discharge (or as soon thereafter as practicable).

[3] See Part I.B. of the permit for the minimum narrative limitations.

[4] To be sampled at an annual frequency when a discharge occurs. While this outfall may not discharge during normal precipitation events, annual reporting requirements remain and reports shall state “No Discharge” if a discharge did not occur that permit year.

[5] The flow reporting requirement is to provide an estimate of the total volume of the discharge in MGD

2. The permittee is authorized to discharge storm water from the outfall listed below in accordance with the terms and conditions of this permit. The permittee is authorized to discharge from Outfall 002S, located at Latitude 39° 44' 50", Longitude -86° 10' 27". Samples taken in compliance with the monitoring requirements below shall be taken at a point representative of the discharge but prior to entry into West Fork of the White River. Such discharge shall be limited and monitored by the permittee as specified below:

DISCHARGE LIMITATIONS [1] [2] [3]

Outfall 002

Parameter	Daily Maximum	Units	Monitoring Requirements Measurement Frequency	Sample Type
Flow[4]	Report	MGD	Annually	Estimate Total
Total Suspended Solids	Report	mg/l	Annually	Grab
pH	Report	s.u.	Annually	Grab
Oil & Grease	Report	mg/l	Annually	Grab
COD	Report	mg/l	Annually	Grab
$CBOD_5$	Report	mg/l	Annually	Grab
Total Kjeldahl Nitrogen	Report	mg/l	Annually	Grab
Nitrate plus Nitrite Nitrogen	Report	mg/l	Annually	Grab
Total Phosphorus	Report	mg/l	Annually	Grab

[1] The Storm Water Monitoring and Non Numeric Effluent Limits and the Storm Water Pollution Prevention Plan (SWPPP) requirements can be found in Part I.D. and I.E. of this permit.

[2] All samples shall be collected from the discharge resulting from a storm event that is greater than 0.1 inches and at least 72 hours from the previously measurable (greater than 0.1 inch rainfall) storm event. There shall be a minimum of three (3) months between reported sampling events.

For each sample taken, the permittee shall record the duration and total rainfall of the storm event, the number of hours between beginning of the storm measured and the end of the previous measurable rain event, and the outside temperature at the time of sampling.

A grab sample shall be taken during the first thirty (30) minutes of the discharge (or as soon thereafter as practicable).

[3] See Part I.B. of the permit for the minimum narrative limitations.

[4] The flow reporting requirement is to provide an estimate of the total volume of the discharge in MGD.

3. The permittee is authorized to discharge from the outfall listed below in accordance with the terms and conditions of this permit. The permittee is authorized to discharge from Outfall 003, located at Latitude 39° 44' 41", Longitude -86° 10' 27". The discharge is limited to non-contact cooling water. Samples taken in compliance with the monitoring requirements below shall be taken at a point representative of the discharge but prior to entry into West Fork of the White River. Such discharge shall be limited and monitored by the permittee as specified below:

DISCHARGE LIMITATIONS [1][2]
Outfall 003

Table 1

	Quantity or Loading			Quality or Concentration			Monitoring Requirements	
Parameter	Monthly Average	Daily Maximum	Units	Monthly Average	Daily Maximum	Units	Measurement Frequency	Sample Type
Flow	Report	Report	MGD	--------	---------	----	2 X Monthly	24 Hour Total
O+G[8]	-------	-------	-----	--------	Report	mg/l	2 X Monthly	Grab
Temperature[6]	Report	Report[7]	°F	--------	---------	-----	2 X Monthly	Grab
TRC[4][5][9]	------	-------	-----	0.02	0.04	mg/l	2 X Monthly	Grab

Table 2

	Quality or Concentration			Monitoring Requirements	
Parameter	Daily Minimum	Daily Maximum	Units	Measurement Frequency	Sample Type
pH [3]	6.0	9.0	s.u.	2 X Monthly	Grab

[1] See Part I.B. of the permit for the minimum narrative limitations.

[2] In the event that a new water treatment additive is to be used that will contribute to this Outfall, or changes are to be made in the use of water treatment additives, including dosage, the permittee must apply for and receive approval from IDEM prior to such discharge. Discharges of any such additives must meet Indiana water quality standards. The permittee must apply for permission to use water treatment additives by completing and submitting State Form 50000 (Application for Approval to Use Water Treatment Additives) currently available at: http://www.in.gov/idem/5157.htm

[3] If the permittee collects more than one grab sample on a given day for pH, the values shall not be averaged for reporting daily maximums or daily minimums. The permittee must report the individual minimum and the individual maximum pH value of any sample during the month on the Monthly Monitoring Report form.

[4] The water quality based effluent limit (WQBEL) for TRC is less than the limit of quantitation (LOQ) as specified in footnote [5]. Compliance with this permit will be demonstrated if the effluent concentrations measured are less than the LOQ.

If the measured concentration of TRC is greater than the water quality based effluent limitations and above the respective LOD specified in footnote [5] in any three (3) consecutive analyses, or any five (5) out of nine (9) analyses, then the discharger shall:

(1) Determine the source of the parameter through an evaluation of sampling techniques, analytical/laboratory procedures, and waste streams (including internal waste streams); and re-examine the chlorination /dechlorination procedures.

(2) The sampling and analysis for TRC shall be increased to 1 X weekly and remain at this increased sampling frequency until:

(a) The increased sampling frequency for TRC has been in place for at least 9 weeks;

(b) At least nine (9) samples have been taken under this increased sampling frequency; and

(c) The measured concentration of TRC is less than the LOD specified in footnote [5] in at least seven (7) out of the nine (9) most recent analyses.

[5] The following EPA approved test methods and associated LODs and LOQs are to be used in the analysis of the effluent samples. Alternative methods may be used if first approved by IDEM and EPA, if applicable.

Parameter	Test Method	LOD	LOQ
Chlorine, Total residual	4500-Cl D-2000, E-2000 or G-2000	0.02 mg/l	0.06 mg/l

Case-Specific LOD/LOQ
The permittee may determine and use a case-specific LOD or LOQ using the analytical method specified above, or any other analytical method which is approved by the Commissioner, and EPA if applicable, prior to use. The LOD shall be derived by the procedure specified for method detection limits contained in 40 CFR Part 136, Appendix B, and the LOQ shall be set equal to 3.18 times the LOD. Other methods may be used if first approved by the Commissioner.

[6] The following conditions apply for Temperature outside the mixing zone:

(1) There shall be no abnormal temperature changes that may adversely affect aquatic life unless caused by natural conditions.

(2) The normal daily and seasonal temperature fluctuations that existed before the addition of heat due to other than natural causes shall be maintained.

(3) The maximum temperature rise at any time or place above natural shall not exceed five (5) degrees Fahrenheit (two and eight-tenths (2.8) degrees Celsius) in streams.

[7] The discharge from Outfall 003, as determined at the edge of the mixing zone described in 327 IAC 2-1-4, shall not exceed the maximum limits in the following table by more than three degrees Fahrenheit (3ºF) (one and seven-tenths degrees Celsius (1.7ºC)).

Table 1

	Jan	Feb	Mar	Apr	May	Jun	Jul	Aug	Sep	Oct	Nov	Dec
ºF	50	50	60	70	80	90	90	90	90	78	70	57
ºC	10	10	15.6	21.1	26.7	32.2	32.2	32.2	32.2	25.5	21.1	14

The permittee will have the option of either meeting the above limits at the end of pipe, or by meeting the limits with a mixed river temperature that takes into account the mixing zone allowed by 327 IAC 2-1-6(b). The mixed river temperature is to be determined by employing the following mathematical model:

$$T_{MR} = T_u + \frac{Q_e(T_e - T_u)}{22.25 + Q_e}$$

where:

T_{MR} = mixed river temperature (ºF)
T_u = upstream river temperature (ºF)
T_e = effluent temperature (ºF)
Q_e = effluent flow (MGD)
22.25 = one-half of the $Q_{7,10}$ low flow value of the receiving stream in MGD

[8] The facility is required to investigate and eliminate any significant or measured concentration of oil and grease (quantities in excess of 5 mg/l). The intent of this requirement is to assure that oil and grease is not added to once-through cooling water in measurable quantities (5 mg/l).

[9] TRC Limitations apply when chlorinated city water is being used in the cooling water system.

B. MINIMUM NARRATIVE LIMITATIONS

At all times the discharge from any and all point sources specified within this permit shall not cause receiving waters:

1. including waters within the mixing zone, to contain substances, materials, floating debris, oil, scum attributable to municipal, industrial, agricultural, and other land use practices, or other discharges that do any of the following:

   a. will settle to form putrescent or otherwise objectionable deposits;

   b. are in amounts sufficient to be unsightly or deleterious;

   c. produce color, visible oil sheen, odor, or other conditions in such degree as to create a nuisance;

   d. are in amounts sufficient to be acutely toxic to , or to otherwise severely injure or kill aquatic life, other animals, plants, or humans;

   e. are in concentrations or combinations that will cause or contribute to the growth of aquatic plants or algae to such a degree as to create a nuisance, be unsightly, or otherwise impair the designated uses.

2. outside the mixing zone, to contain substances in concentrations that on the basis of available scientific data are believed to be sufficient to injure, be chronically toxic to, or be carcinogenic, mutagenic, or teratogenic to humans, animals, aquatic life, or plants.

C. MONITORING AND REPORTING

1. Representative Sampling

   Samples and measurements taken as required herein shall be representative of the volume and nature of the monitored discharge flow and shall be taken at times which reflect the full range and concentration of effluent parameters normally expected to be present. Samples shall not be taken at times to avoid showing elevated levels of any parameters.

2. Monthly Reporting

   The permittee shall submit monitoring reports to the Indiana Department of Environmental Management (IDEM) containing results obtained during the previous month and shall be submitted no later than the 28th day of the month following each completed monitoring period. The first report shall be submitted by the 28th day of the month following the month in which the permit becomes effective.

These reports shall include, but not necessarily be limited to, the Discharge Monitoring Report (DMR) and the Monthly Monitoring Report (MMR). All reports shall be submitted electronically by using the NetDMR application, upon registration, receipt of the NetDMR Subscriber Agreement, and IDEM approval of the proposed NetDMR Signatory. Access the NetDMR website (for initial registration and DMR/MMR submittal) via CDX at: https://cdx.epa.gov/. The Regional Administrator may request the permittee to submit monitoring reports to the Environmental Protection Agency if it is deemed necessary to assure compliance with the permit. See Part II.C.10 of this permit for Future Electronic Reporting Requirements.

a. Calculations that require averaging of measurements of daily values (both concentrations and mass) shall use an arithmetic mean, except the monthly average for *E. coli* shall be calculated as a geometric mean.

b. Daily effluent values (both mass and concentration) that are less than the LOQ that are used to determine the monthly average effluent level shall be accommodated in calculation of the average using statistical methods that have been approved by the Commissioner.

c. Effluent concentrations less than the LOD shall be reported on the Discharge Monitoring Report (DMR) forms as < (less than) the value of the LOD. For example, if a substance is not detected at a concentration of 0.1 µg/l, report the value as <0.1 µg/l.

d. Effluent concentrations greater than or equal to the LOD and less than the LOQ that are reported on a DMR shall be reported as the actual value and annotated on the DMR to indicate that the value is not quantifiable.

e. Mass discharge values which are calculated from concentrations reported as less than the value of the limit of detection shall be reported as less than the corresponding mass discharge value.

f. Mass discharge values that are calculated from effluent concentrations greater than the limit of detection shall be reported as the calculated value.

3. Definitions

a. “Monthly Average” means the total mass or flow-weighted concentration of all daily discharges during a calendar month on which daily discharges are sampled or measured, divided by the number of daily discharges sampled and/or measured during such calendar month.

The monthly average discharge limitation is the highest allowable average monthly discharge for any calendar month.

b. “Daily Discharge” means the total mass of a pollutant discharged during the calendar day or, in the case of a pollutant limited in terms other than mass pursuant to 327 IAC 5-2-11(e), the average concentration or other measurement of the pollutant specified over the calendar day or any twenty-four hour period that reasonably represents the calendar day for the purposes of sampling.

c. “Daily Maximum” means the maximum allowable daily discharge for any calendar day.

d. A “24-hour composite sample” means a sample consisting of at least 3 individual flow-proportioned samples of wastewater, taken by the grab sample method or by an automatic sampler, which are taken at approximately equally spaced time intervals for the duration of the discharge within a 24-hour period and which are combined prior to analysis. A flow-proportioned composite sample may be obtained by:

(1) recording the discharge flow rate at the time each individual sample is taken,

(2) adding together the discharge flow rates recorded from each individuals sampling time to formulate the “total flow” value,

(3) the discharge flow rate of each individual sampling time is divided by the total flow value to determine its percentage of the total flow value,

(4) then multiply the volume of the total composite sample by each individual sample’s percentage to determine the volume of that individual sample which will be included in the total composite sample.

e. “Concentration” means the weight of any given material present in a unit volume of liquid. Unless otherwise indicated in this permit, concentration values shall be expressed in milligrams per liter (mg/l).

f. The “Regional Administrator” is defined as the Region 5 Administrator, U.S. EPA, located at 77 West Jackson Boulevard, Chicago, Illinois 60604.

g. The “Commissioner” is defined as the Commissioner of the Indiana Department of Environmental Management, which is located at the following address: 100 North Senate Avenue, Indianapolis, Indiana 46204.

h. “Limit of Detection” or “LOD” means the minimum concentration of a substance that can be measured and reported with ninety-nine percent (99%) confidence that the analyte concentration is greater than zero (0) for a particular analytical method and sample matrix.

i. “Limit of Quantitation” or “LOQ” means a measurement of the concentration of a contaminant obtained by using a specified laboratory procedure calibrated at a specified concentration above the method detection level. It is considered the lowest concentration at which a particular contaminant can be quantitatively measured using a specified laboratory procedure for monitoring of the contaminant. This term is also sometimes called limit of quantification or quantification level.

j. “Method Detection Level” or “MDL” means the minimum concentration of an analyte (substance) that can be measured and reported with a ninety-nine percent (99%) confidence that the analyte concentration is greater than zero (0) as determined by procedure set forth in 40 CFR 136, Appendix B. The method detection level or MDL is equivalent to the LOD.

k. “Grab Sample” means a sample which is taken from a wastestream on a one-time basis without consideration of the flow rate of the wastestream and without considerations of time.

4. Test Procedures

The analytical and sampling methods used shall conform to the version of 40 CFR 136 incorporated by reference in 327 IAC 5. Different but equivalent methods are allowable if they receive the prior written approval of the Commissioner and the U.S. Environmental Protection Agency. When more than one test procedure is approved for the purposes of the NPDES program under 40 CFR 136 for the analysis of a pollutant or pollutant parameter, the test procedure must be sufficiently sensitive as defined at 40 CFR 122.21(e)(3) and 122.44(i)(1)(iv).

5. Recording of Results

For each measurement or sample taken pursuant to the requirements of this permit, the permittee shall maintain records of all monitoring information and monitoring activities, including:

a. The date, exact place and time of sampling or measurement;

b. The person(s) who performed the sampling or measurements;

c. The date(s) analyses were performed;

d. The person(s) who performed the analyses;

e. The analytical techniques or methods used; and

f. The results of such measurements and analyses.

6. Additional Monitoring by Permittee

If the permittee monitors any pollutant at the location(s) designated herein more frequently than required by this permit, using approved analytical methods as specified above, the results of this monitoring shall be included in the calculation and reporting of the values required in the monthly Discharge Monitoring Report (DMR) and Monthly Monitoring Report (MMR). Such increased frequency shall also be indicated. Other monitoring data not specifically required in this permit (such as internal process or internal waste stream data) which is collected by or for the permittee need not be submitted unless requested by the Commissioner.

7. Records Retention

All records and information resulting from the monitoring activities required by this permit, including all records of analyses performed and calibration and maintenance of instrumentation and recording from continuous monitoring instrumentation, shall be retained for a minimum of three (3) years. In cases where the original records are kept at another location, a copy of all such records shall be kept at the permitted facility. The three years shall be extended:

a. automatically during the course of any unresolved litigation regarding the discharge of pollutants by the permittee or regarding promulgated effluent guidelines applicable to the permittee; or

b. as requested by the Regional Administrator or the Indiana Department of Environmental Management.

D. STORM WATER MONITORING AND NON-NUMERIC EFFLUENT LIMITS

The permittee shall implement the non-numeric permit conditions in this Section of the permit for the entire site as it relates to storm water associated with industrial activity regardless which outfall the storm water is discharged from.

1. Control Measures and Effluent Limits

In the technology-based limits included in Part D.2-4., the term “minimize” means reduce and/or eliminate to the extent achievable using control measures (including best management practices) that are technologically available and economically practicable and achievable in light of best industry practice.

2. Control Measures

Select, design, install, and implement control measures (including best management practices) to address the selection and design considerations in Part D.3 to meet the non-numeric effluent limits in Part D.4. The selection, design, installation, and implementation of these control measures must be in accordance with good engineering practices and manufacturer’s specifications. Any deviation from the manufacturer’s specifications shall be documented. If the control measures are not achieving their intended effect in minimizing pollutant discharges, the control measures must be modified as expeditiously as practicable. Regulated storm water discharges from the facility include storm water run-on that commingles with storm water discharges associated with industrial activity at the facility.

3. Control Measure Selection and Design Considerations

When selecting and designing control measures consider the following:

a. preventing storm water from coming into contact with polluting materials is generally more effective, and cost-effective, than trying to remove pollutants from storm water;

b. use of control measures in combination is more effective than use of control measures in isolation for minimizing pollutants in storm water discharge;

c. assessing the type and quantity of pollutants, including their potential to impact receiving water quality, is critical to designing effective control measures that will achieve the limits in this permit;

d. minimizing impervious areas at your facility and infiltrating runoff onsite (including bioretention cells, green roofs, and pervious pavement, among other approaches), can reduce runoff and improve groundwater recharge and stream base flows in local streams, although care must be taken to avoid ground water contamination;

e. flow can be attenuated by use of open vegetated swales and natural depressions;

f. conservation and/or restoration of riparian buffers will help protect streams from storm water runoff and improve water quality; and

g. use of treatment interceptors (e.g. swirl separators and sand filters) may be appropriate in some instances to minimize the discharge of pollutants.

4. Technology-Based Effluent Limits (BPT/BAT/BCT): Non-Numeric Effluent Limits:

a. Minimize Exposure

Minimize the exposure of raw, final, or waste materials to rain, snow, snowmelt, and runoff. To the extent technologically available and economically practicable and achievable, either locate industrial materials and activities inside or protect them with storm resistant coverings in order to minimize exposure to rain, snow, snowmelt, and runoff (although significant enlargement of impervious surface area is not recommended). In minimizing exposure, pay particular attention to the following areas:

Loading and unloading areas: locate in roofed or covered areas where feasible; use grading, berming, or curbing around the loading area to divert run-on; locate the loading and unloading equipment and vehicles so that leaks are contained in existing containment and flow diversion systems.

Material storage areas: locate indoors, or in roofed or covered areas where feasible; install berms/dikes around these areas; use dry cleanup methods.

Note: Industrial materials do not need to be enclosed or covered if storm water runoff from affected areas will not be discharged to receiving waters.

b. Good Housekeeping

Keep clean all exposed areas that are potential sources of pollutants, using such measures as sweeping at regular intervals, keeping materials orderly and labeled, and stowing materials in appropriate containers.

As part of the developed good housekeeping program, include a cleaning and maintenance program for all impervious areas of the facility where particulate matter, dust, or debris may accumulate, especially areas where material loading and unloading, storage, handling, and processing occur; and where practicable, the paving of areas where vehicle traffic or material storage occur but where vegetative or other stabilization methods are not practicable (institute a sweeping program in these areas too). For unstabilized areas where sweeping is not practicable, consider using storm water management devices such as sediment traps, vegetative buffer strips, filter fabric fence, sediment filtering boom, gravel outlet protection, or other equivalent measures that effectively trap or remove sediment.

c. Maintenance

Maintain all control measures which are used to achieve the effluent limits required by this permit in effective operating condition. Nonstructural control measures must also be diligently maintained (e.g., spill response supplies available, personnel appropriately trained). If control measures need to be replaced or repaired, make the necessary repairs or modifications as expeditiously as practicable.

d. Spill Prevention and Response Procedures

You must minimize the potential for leaks, spills and other releases that may be exposed to storm water and develop plans for effective response to such spills if or when they occur. At a minimum, you must implement:

(1) Procedures for plainly labeling containers (e.g., "Used Oil", "Spent Solvents", "Fertilizers and Pesticides", etc.) that could be susceptible to spillage or leakage to encourage proper handling and facilitate rapid response if spills or leaks occur;

(2) Preventive measures such as barriers between material storage and traffic areas, secondary containment provisions, and procedures for material storage and handling;

(3) Procedures for expeditiously stopping, containing, and cleaning up leaks, spills, and other releases. Employees who may cause, detect or respond to a spill or leak must be trained in these procedures and have necessary spill response equipment available. If possible, one of these individuals should be a member of your storm water pollution prevention team;

(4) Procedures for notification of appropriate facility personnel, emergency response agencies, and regulatory agencies. State or local requirements may necessitate reporting spills or discharges to local emergency response, public health, or drinking water supply agencies. Contact information must be in locations that are readily accessible and available;

(5) Procedures for documenting where potential spills and leaks could occur that could contribute pollutants to storm water discharges, and the corresponding outfalls that would be affected by such spills and leaks; and

(6) A procedure for documenting all significant spills and leaks of oil or toxic or hazardous pollutants that actually occurred at exposed areas, or that drained to a storm water conveyance.

e. Erosion and Sediment Controls

Through the use of structural and/or non-structural control measures stabilize, and contain runoff from, exposed areas to minimize onsite erosion and sedimentation, and the resulting discharge of pollutants. Among other actions to meet this limit, place flow velocity dissipation devices at discharge locations and within outfall channels where necessary to reduce erosion and/or settle out pollutants. In selecting, designing, installing, and implementing appropriate control measures, you are encouraged to check out information from both the State and EPA websites. The following two websites are given as information sources:

http://www.in.gov/idem/stormwater/2363.htm
and
https://www.epa.gov/npdes/stormwater-discharges-industrial-activities

f. Management of Runoff

Divert, infiltrate, reuse, contain or otherwise reduce storm water runoff, to minimize pollutants in the discharge.

g. Salt Storage Piles or Piles Containing Salt

Enclose or cover storage piles of salt, or piles containing salt, used for deicing or other commercial or industrial purposes, including maintenance of paved surfaces. You must implement appropriate measures (e.g., good housekeeping, diversions, containment) to minimize exposure resulting from adding to or removing materials from the pile. Piles do not need to be enclosed or covered if storm water runoff from the piles is not discharged.

h. Waste, Garbage, and Floatable Debris

Ensure that waste, garbage, and floatable debris are not discharged to receiving waters by keeping exposed areas free of such materials or by intercepting them before they are discharged.

i. Employee Training

Train all employees who work in areas where industrial material or activities are exposed to storm water, or who are responsible for implementing activities necessary to meet the conditions of this permit (e.g., inspectors, maintenance personnel), including all members of your Pollution Prevention Team. Training must cover the specific control measures used to achieve the effluent limits in this part, and monitoring, inspection, planning, reporting, and documentation requirements in other parts of this permit.

j. Non-Storm water Discharges

You must determine if any non-storm water discharges not authorized by an NPDES permit exist. Any non-storm water discharges discovered must either be eliminated or modified into this permit. The following non-storm water discharges are authorized and must be documented in the Storm Water Pollution Prevention Plan:

Discharges from fire-fighting activities;
Fire Hydrant flushings;
Potable water, including water line flushings;
Uncontaminated condensate from air conditioners, coolers, and other compressors and from the outside storage of refrigerated gases or liquids;
Irrigation drainage;
Landscape watering provided all pesticides, herbicides, and fertilizer have been applied in accordance with the approved labeling;

Pavement wash water where no detergents are used and no spills or leaks of toxic or hazardous material have occurred (unless all spilled material has been removed);
Routine external building washdown that does not use detergents;
Uncontaminated ground water or spring water;
Foundation or footing drains where flows are not contaminated with process materials;
Incidental windblown mist from cooling towers that collects on rooftops or adjacent portions of the facility, but not intentional discharges from cooling towers (e.g., "piped cooling tower blowdown or drains);
Vehicle wash- waters where uncontaminated water without detergents or solvents is utilized; and
Runoff from the use of dust suppressants approved for use by IDEM.

k. Dust Generation and Vehicle Tracking of Industrial Materials

You must minimize generation of dust and off-site tracking of raw, final, or waste materials.

5. Annual Review

At least once every twelve (12) months, you must review the selection, design, installation, and implementation of your control measures to determine if modifications are necessary to meet the effluent limitations in this permit. You must document the results of your review in a report that shall be retained within the SWPPP. You must also submit the report to the Industrial NPDES Permit Section, as well as the Compliance Branch, on an annual basis. The report may be submitted by email to the Industrial NPDES Permit Section at OWQWWPER@idem.in.gov and to the Compliance Branch at wwReports@idem.in.gov. The email subject line should include the NPDES Permit # and the type of report being submitted (Annual Storm Water Report). The permittee's first annual review report will be due twelve (12) months from the effective date of the permit. All subsequent annual review reports will be due no later than the anniversary of the effective date of the permit.

6. Corrective Actions – Conditions Requiring Review

a. If any of the following conditions occur, you must review and revise the selection, design, installation, and implementation of your control measures to ensure that the condition is eliminated and will not be repeated:

(1) an unauthorized release or discharge (e.g., spill, leak, or discharge of non-storm water not authorized by this NPDES permit) occurs at this facility;

(2) it is determined that your control measures are not stringent enough for the discharge to meet applicable water quality standards;

(3) it is determined in your routine facility inspection, an inspection by EPA or IDEM, comprehensive site evaluation, or the Annual Review required in Part D.5 that modifications to the control measures are necessary to meet the effluent limits in this permit or that your control measures are not being properly operated and maintained; or

(4) Upon written notice by the Commissioner that the control measures prove to be ineffective in controlling pollutants in storm water discharges exposed to industrial activity.

b. If construction or a change in design, operation, or maintenance at your facility significantly changes the nature of pollutants discharged in storm water from your facility, or significantly increases the quantity of pollutants discharged, you must review and revise the selection, design, installation, and implementation of your control measures to determine if modifications are necessary to meet the effluent limits in this permit.

7. Corrective Action Deadlines

You must document your discovery of any of the conditions listed in Part I.D.6 within thirty (30) days of making such discovery. Subsequently, within one-hundred and twenty (120) days of such discovery, you must document any corrective action(s) to be taken to eliminate or further investigate the deficiency or if no corrective action is needed, the basis for that determination. Specific documentation required within 30 and 120 days is detailed below. If you determine that changes to your control measures are necessary following your review, any modifications to your control measures must be made before the next storm event if possible, or as soon as practicable following that storm event. These time intervals are not grace periods, but schedules considered reasonable for the documenting of your findings and for making repairs and improvements. They are included in this permit to ensure that the conditions prompting the need for these repairs and improvements are not allowed to persist indefinitely.

8. Corrective Action Report

a. Within 30 days of a discovery of any condition listed in Part I.D.6, you must document the following information:

(1) Brief description of the condition triggering corrective action;

(2) Date condition identified; and

(3) How deficiency identified.

b. Within 120 days of discovery of any condition listed in Part I.D.6, you must document the following information:

(1) Summary of corrective action taken or to be taken (or, for triggering events identified in Part I.D.6.b.(1), where you determine that corrective action is not necessary, the basis for this determination)

(2) Notice of whether SWPPP modifications are required as a result of this discovery or corrective action;

(3) Date corrective action initiated; and

(4) Date corrective action completed or expected to be completed.

9. Inspections

The inspections in this part must be conducted at this facility when the facility is operating. Any corrective action required as a result of an inspection or evaluation conducted under Part I.D.9. must be performed consistent with Part I.D.6 of this permit.

a. Quarterly Inspections

At a minimum, quarterly inspections of the storm water management measures and storm water run-off conveyances. The routine inspections must be performed by qualified personnel with at least one member of your storm water pollution prevention team. Inspections must be documented and either contained in, or have the on-site record keeping location referenced in, the SWPPP.

As part of the routine inspections, address all potential sources of pollutants, including (if applicable) air pollution control equipment (e.g., baghouses, electrostatic precipitator, scrubbers, and cyclones), for any signs of degradation (e.g., leaks, corrosion, or improper operation) that could limit their efficiency and lead to excessive emissions.

Consider monitoring air flow at inlets and outlets (or use equivalent measures) to check for leaks (e.g., particulate deposition) or blockage in ducts. Also inspect all process and material handling equipment (e.g., conveyors, cranes, and vehicles) for leaks, drips, or the potential loss of material; and material storage areas (e.g., piles, bins, or hoppers for storing coke, coal, scrap, or slag, as well as chemicals stored in tanks and drums) for signs of material loss due to wind or storm water runoff.

Based on the results of the evaluation, the description of potential pollutant sources identified in the plan in accordance with Part I.E.2.b of this permit and pollution prevention measures and controls identified in the plan in accordance with Part I.D.4. of this permit shall be revised as appropriate within the timeframes contained in Part I.D.7 of this permit.

b. Annual Routine Facility Inspections

At least once during the calendar year, a routine facility inspection must be conducted while a discharge is occurring. You must document the findings of each routine facility inspection performed and maintain this documentation with your SWPPP or have the on-site record keeping location referenced in the SWPPP. At a minimum, your documentation must include:

(1) The inspection date and time;

(2) The name(s) and signature(s) of the inspectors;

(3) Weather information and a description of any discharges occurring at the time of the inspection;

(4) Any previously unidentified discharges of pollutants from the site;

(5) Any control measures needing maintenance or repairs;

(6) Any failed control measures that need replacement;

(7) Any incidents of noncompliance observed; and

(8) Any additional control measures needed to comply with the permit requirements.

c. Annual Comprehensive Site Compliance Evaluation

Qualified personnel and at least one member of your Pollution Prevention Team shall conduct a comprehensive site compliance evaluation, at least once per year, to confirm the accuracy of the description of potential pollution sources contained in the plan, determine the effectiveness of the plan, and assess compliance with the permit. Such evaluations shall provide:

(1) Areas contributing to a storm water discharge associated with industrial activity shall be visually inspected for evidence of, or the potential for, pollutants entering the drainage system. Measures to reduce pollutant loadings shall be evaluated to determine whether they are adequate and properly implemented in accordance with the terms of the permit or whether additional control measures are needed. Structural storm water management measures, sediment and erosion control measures, and other structural pollution prevention measures identified in the plan shall be observed to ensure that they are operating correctly. A visual inspection of equipment needed to implement the plan, such as spill response equipment, shall be made.

(2) A report summarizing the scope of the evaluation, personnel making the evaluation, the date(s) of the evaluation, major observations relating to the implementation of the storm water pollution prevention plan, and actions taken in accordance with the above paragraph must be documented and either contained in, or have on-site record keeping location referenced in, the SWPPP at least 3 years after the date of the evaluation. The report shall identify any incidents of noncompliance. Where a report does not identify any incidents of noncompliance, the report shall contain a certification that the facility is in compliance with the storm water pollution prevention plan and this permit. The report shall be signed in accordance with the signatory requirements of Part II.C.6 of this permit.

(3) Where compliance evaluation schedules overlap the inspections required under this part, the compliance evaluation may be conducted in place of one such inspection.

E. STORM WATER POLLUTION PREVENTION PLAN

1. Development of Plan

Within 12 months from the effective date of this permit, the permittee is required to revise and update the current Storm Water Pollution Prevention Plan (SWPPP) for the permitted facility. The plan shall at a minimum include the following:

a. Identify potential sources of pollution, which may reasonably be expected to affect the quality of storm water discharges associated with industrial activity from the facility. Storm water associated with industrial activity (defined in 40 CFR 122.26(b)(14)) includes, but is not limited to, the discharge from any conveyance which is used for collecting and conveying storm water and which is directly related to manufacturing, processing or materials storage areas at an industrial plant;

b. Describe practices and measure to be used in reducing the potential for pollutants to be exposed to storm water; and

c. Assure compliance with the terms and conditions of this permit.

2. Contents

The plan shall include, at a minimum, the following items:

a. Pollution Prevention Team -The plan shall list, by position title, the member or members of the facility organization as members of a Storm Water Pollution Prevention Team who are responsible for developing the storm water pollution prevention plan (SWPPP) and assisting the facility or plant manager in its implementation, maintenance, and revision. The plan shall clearly identify the responsibilities of each storm water pollution prevention team member. Each member of the storm water pollution prevention team must have ready access to either an electronic or paper copy of applicable portions of this permit and your SWPPP.

b. Description of Potential Pollutant Sources – The plan shall provide a description of areas at the site exposed to industrial activity and have a reasonable potential for storm water to be exposed to pollutants. The plan shall identify all activities and significant materials (defined in 40 CFR 122.26(b)), which may potentially be significant pollutant sources. As a minimum, the plan shall contain the following:

(1) A soils map indicating the types of soils found on the facility property and showing the boundaries of the facility property.

(2) A graphical representation, such as an aerial photograph or site layout maps, drawn to an appropriate scale, which contains a legend and compass coordinates, indicating, at a minimum, the following:

(A) All on-site storm water drainage and discharge conveyances, which may include pipes, ditches, swales, and erosion channels, related to a storm water discharge.

(B) Known adjacent property drainage and discharge conveyances, if directly associated with run-off from the facility.

(C) All on-site and known adjacent property water bodies, including wetlands and springs.

(D) An outline of the drainage area for each outfall.

(E) An outline of the facility property, indicating directional flows, via arrows, of surface drainage patterns.

(F) An outline of impervious surfaces, which includes pavement and buildings, and an estimate of the impervious and pervious surface square footage for each drainage area placed in a map legend.

(G) On-site injection wells, as applicable.

(H) On-site wells used as potable water sources, as applicable.

(I) All existing major structural control measures to reduce pollutants in storm water run-off.

(J) All existing and historical underground or aboveground storage tank locations, as applicable.

(K) All permanently designated plowed or dumped snow storage locations.

(L) All loading and unloading areas for solid and liquid bulk materials.

(M) All existing and historical outdoor storage areas for raw materials, intermediary products, final products, and waste materials. Include materials handled at the site that potentially may be exposed to precipitation or runoff, areas where deposition of particulate matter from process air emissions or losses during material-handling activities.

(N) All existing or historical outdoor storage areas for fuels, processing equipment, and other containerized materials, for example, in drums and totes.

(O) Outdoor processing areas.

(P) Dust or particulate generating process areas.

(Q) Outdoor assigned waste storage or disposal areas.

(R) Pesticide or herbicide application areas.

(S) Vehicular access roads.

(T) Identify any storage or disposal of wastes such as spent solvents and baths, sand, slag and dross; liquid storage tanks and drums; processing areas including pollution control equipment (e.g., baghouses); and storage areas of raw material such as coal, coke, scrap, sand, fluxes, refractories, or metal in any form. In addition, indicate where an accumulation of significant amounts of particulate matter could occur from such sources as furnace or oven emissions, losses from coal and coke handling operation, etc., and could result in a discharge of pollutants.

(U) The mapping of historical locations is only required if the historical locations have a reasonable potential for storm water exposure to historical pollutants.

(3) An area site map that indicates:

(A) The topographic relief or similar elevations to determine surface drainage patterns;

(B) The facility boundaries;

(C) All receiving waters;

(D) All known drinking water wells; and

Includes at a minimum, the features in clauses (A), (C), and (D) within a one-fourth (1/4) mile radius beyond the property boundaries of the facility. This map must be to scale and include a legend and compass coordinates.

(4) A narrative description of areas that generate storm water discharges exposed to industrial activity including descriptions for any existing or historical areas listed in subdivision 2.b.(2)(J) through (T) of this Part, and any other areas thought to generate storm water discharges exposed to industrial activity. The narrative descriptions for each identified area must include the following:

(A) Type and typical quantity of materials present in the area.

(B) Methods of storage, including presence of any secondary containment measures.

(C) Any remedial actions undertaken in the area to eliminate pollutant sources or exposure of storm water to those sources. If a corrective action plan was developed, the type of remedial action and plan date shall be referenced.

(D) Any significant release or spill history dating back a period of three (3) years from the effective date of this permit, in the identified area, for materials spilled outside of secondary containment structures and impervious surfaces in excess of their reportable quantity, including the following:

i. The date and type of material released or spilled.
ii. The estimated volume released or spilled.
iii. A description of the remedial actions undertaken, including disposal or treatment.

Depending on the adequacy or completeness of the remedial actions, the spill history shall be used to determine additional pollutant sources that may be exposed to storm water. In subsequent permit terms, the history shall date back for a period of five (5) years from the date of the permit renewal application.

(E) Where the chemicals or materials have the potential to be exposed to storm water discharges, the descriptions for each identified area must include a risk identification analysis of chemicals or materials stored or used within the area. The analysis must include the following:

i. Toxicity data of chemicals or materials used within the area, referencing appropriate material safety data sheet information locations.

ii. The frequency and typical quantity of listed chemicals or materials to be stored within the area.

iii. Potential ways in which storm water discharges may be exposed to listed chemicals and materials.

iv. The likelihood of the listed chemicals and materials to come into contact with water.

(5) A narrative description of existing and planned management practices and measures to improve the quality of storm water run-off entering a water of the state. Descriptions must be created for existing or historical areas listed in subdivision 2.b.(2)(J) through (T) and any other areas thought to generate storm water discharges exposed to industrial activity. The description must include the following:

(A) Any existing or planned structural and nonstructural control practices and measures.

(B) Any treatment the storm water receives prior to leaving the facility property or entering a water of the state.

(C) The ultimate disposal of any solid or fluid wastes collected in structural control measures other than by discharge.

(D) Describe areas that due to topography, activities, or other factors have a high potential for significant soil erosion.

(E) Document the location of any storage piles containing salt used for deicing.

(F) Information or other documentation required under Part I.E.2(d) of this permit.

(6) The results of storm water monitoring. The monitoring data must include completed field data sheets, chain-of-custody forms, and laboratory results. If the monitoring data are not placed into the facility's SWPPP, the on-site location for storage of the information must be reference in the SWPPP.

c. Non-Storm water Discharges – You must document that you have evaluated for the presence of non-storm water discharges not authorized by an NPDES permit. Any non-storm water discharges have either been eliminated or incorporated into this permit. Documentation of non-storm water discharges shall include:

(1) A written non-storm water assessment, including the following:

(A) A certification letter stating that storm water discharges entering a water of the state have been evaluated for the presence of illicit discharges and non-storm water contributions.

(B) Detergent or solvent-based washing of equipment or vehicles that would allow washwater additives to enter any storm water only drainage system shall not be allowed at this facility unless appropriately permitted under this NPDES permit.

(C) All interior maintenance area floor drains with the potential for maintenance fluids or other materials to enter storm water only storm sewers must be either sealed, connected to a sanitary sewer with prior authorization, or appropriately permitted under this NPDES permit. The sealing, sanitary sewer connecting, or permitting of drains under this item must be documented in the written non-storm water assessment program.

(D) The certification shall include a description of the method used, the date of any testing, and the on-site drainage points that were directly observed during the test.

d. General Requirements – The SWPPP must meet the following general requirements:

(1) The plan shall be certified by a qualified professional. The term qualified professional means an individual who is trained and experienced in water treatment techniques and related fields as may be demonstrated by state registration, professional certification, or completion of course work that enable the individual to make sound, professional judgments regarding storm water control/treatment and monitoring, pollutant fate and transport, and drainage planning.

(2) The plan shall be retained at the facility and be available for review by a representative of the Commissioner upon request. IDEM may provide access to portions of your SWPPP to the public.

(3) The plan must be revised and updated as required. Revised and updated versions of the plan must be implemented on or before three hundred sixty-five (365) days from the effective date of this permit. The Commissioner may grant an extension of this time frame based on a request by the person showing reasonable cause.

(4) If the permittee has other written plans, required under applicable federal or state law, such as operation and maintenance, spill prevention control and countermeasures (SPCC), or risk contingency plans, which fulfill certain requirements of an SWPPP, these plans may be referenced, at the permittee's discretion, in the appropriate sections of the SWPPP to meet those section requirements.

(5) The permittee may combine the requirements of the SWPPP with another written plan if:

(A) The plan is retained at the facility and available for review;

(B) All the requirements of the SWPPP are contained within the plan; and

(C) A separate, labeled section is utilized in the plan for the SWPPP requirements.

F. REOPENING CLAUSES

This permit may be modified, or alternately, revoked and reissued, after public notice and opportunity for hearing:

1. to comply with any applicable effluent limitation or standard issued or approved under 301(b)(2)(C),(D) and (E), 304 (b)(2), and 307(a)(2) of the Clean Water Act, if the effluent limitation or standard so issued or approved:

   a. contains different conditions or is otherwise more stringent than any effluent limitation in the permit; or

   b. controls any pollutant not limited in the permit.

2. for any of the causes listed under 327 IAC 5-2-16.

3. to include a case-specific Limit of Detection (LOD) and/or Limit of Quantitation (LOQ). The permittee must demonstrate that such action is warranted in accordance with the procedures specified under Appendix B, 40 CFR Part 136, using the most sensitive analytical methods approved by EPA under 40 CFR Part 136, or approved by the Commissioner.

4. to specify the use of a different analytical method if a more sensitive analytical method has been specified in or approved under 40 CFR 136 or approved by the Commissioner to monitor for the presence and amount in the effluent of the pollutant for which the WQBEL is established. The permit shall specify the LOD and LOQ that can be achieved by use of the specified analytical method.

PART II

STANDARD CONDITIONS FOR NPDES PERMITS

A. GENERAL CONDITIONS

1. Duty to Comply

The permittee shall comply with all terms and conditions of this permit in accordance with 327 IAC 5-2-8(1) and all other requirements of 327 IAC 5-2-8. Any permit noncompliance constitutes a violation of the Clean Water Act and IC 13 and is grounds for enforcement action or permit termination, revocation and reissuance, modification, or denial of a permit renewal application.

It shall not be a defense for a permittee in an enforcement action that it would have been necessary to halt or reduce the permitted activity in order to maintain compliance with the conditions of the permit.

2. Duty to Mitigate

In accordance with 327 IAC 5-2-8(3), the permittee shall take all reasonable steps to minimize or correct any adverse impact to the environment resulting from noncompliance with this permit. During periods of noncompliance, the permittee shall conduct such accelerated or additional monitoring for the affected parameters, as appropriate or as requested by IDEM, to determine the nature and impact of the noncompliance.

3. Duty to Reapply

If the permittee wishes to continue an activity regulated by this permit after the expiration date of this permit, the permittee must obtain and submit an application for renewal of this permit in accordance with 327 IAC 5-2-8(2). It is the permittee's responsibility to obtain and submit the application. In accordance with 327 IAC 5-2-3(c), the owner of the facility or operation from which a discharge of pollutants occurs is responsible for applying for and obtaining the NPDES permit, except where the facility or operation is operated by a person other than an employee of the owner in which case it is the operator's responsibility to apply for and obtain the permit. Pursuant to 327 IAC 5-3-2(a)(2), the application must be submitted at least 180 days before the expiration date of this permit. This deadline may be extended if all of the following occur:

a. permission is requested in writing before such deadline;

b. IDEM grants permission to submit the application after the deadline; and

c. the application is received no later than the permit expiration date.

4. Permit Transfers

In accordance with 327 IAC 5-2-8(4)(D), this permit is nontransferable to any person except in accordance with 327 IAC 5-2-6(c). This permit may be transferred to another person by the permittee, without modification or revocation and reissuance being required under 327 IAC 5-2-16(c)(1) or 16(e)(4), if the following occurs:

a. the current permittee notified the Commissioner at least thirty (30) days in advance of the proposed transfer date;

b. a written agreement containing a specific date of transfer of permit responsibility and coverage between the current permittee and the transferee (including acknowledgment that the existing permittee is liable for violations up to that date, and the transferee is liable for violations from that date on) is submitted to the Commissioner;

c. the transferee certifies in writing to the Commissioner their intent to operate the facility without making such material and substantial alterations or additions to the facility as would significantly change the nature or quantities of pollutants discharged and thus constitute cause for permit modification under 327 IAC 5-2-16(d). However, the Commissioner may allow a temporary transfer of the permit without permit modification for good cause, e.g., to enable the transferee to purge and empty the facility's treatment system prior to making alterations, despite the transferee's intent to make such material and substantial alterations or additions to the facility; and

d. the Commissioner, within thirty (30) days, does not notify the current permittee and the transferee of the intent to modify, revoke and reissue, or terminate the permit and to require that a new application be filed rather than agreeing to the transfer of the permit.

The Commissioner may require modification or revocation and reissuance of the permit to identify the new permittee and incorporate such other requirements as may be necessary under the Clean Water Act or state law.

5. Permit Actions

a. In accordance with 327 IAC 5-2-16(b) and 327 IAC 5-2-8(4), this permit may be modified, revoked and reissued, or terminated for cause, including, but not limited to, the following:

(1) Violation of any terms or conditions of this permit;

(2) Failure of the permittee to disclose fully all relevant facts or misrepresentation of any relevant facts in the application, or during the permit issuance process; or

(3) A change in any condition that requires either a temporary or a permanent reduction or elimination of any discharge controlled by the permit, e.g., plant closure, termination of discharge by connection to a POTW, a change in state law that requires the reduction or elimination of the discharge, or information indicating that the permitted discharge poses a substantial threat to human health or welfare.

b. Filing of either of the following items does not stay or suspend any permit condition: (1) a request by the permittee for a permit modification, revocation and reissuance, or termination, or (2) submittal of information specified in Part II.A.3 of the permit including planned changes or anticipated noncompliance.

The permittee shall submit any information that the permittee knows or has reason to believe would constitute cause for modification or revocation and reissuance of the permit at the earliest time such information becomes available, such as plans for physical alterations or additions to the permitted facility that:

(1) could significantly change the nature of, or increase the quantity of pollutants discharged; or

(2) the commissioner may request to evaluate whether such cause exists.

c. In accordance with 327 IAC 5-1-3(a)(5), the permittee must also provide any information reasonably requested by the Commissioner.

6. Property Rights

Pursuant to 327 IAC 5-2-8(6) and 327 IAC 5-2-5(b), the issuance of this permit does not convey any property rights of any sort or any exclusive privileges, nor does it authorize any injury to persons or private property or invasion of other private rights, any infringement of federal, state, or local laws or regulations. The issuance of the permit also does not preempt any duty to obtain any other state, or local assent required by law for the discharge or for the construction or operation of the facility from which a discharge is made.

7. Severability

In accordance with 327 IAC 1-1-3, the provisions of this permit are severable and, if any provision of this permit or the application of any provision of this permit to any person or circumstance is held invalid, the invalidity shall not affect any other provisions or applications of the permit which can be given effect without the invalid provision or application.

8. Oil and Hazardous Substance Liability

Nothing in this permit shall be construed to relieve the permittee from any responsibilities, liabilities, or penalties to which the permittee is or may be subject to under Section 311 of the Clean Water Act.

9. State Laws

Nothing in this permit shall be construed to preclude the institution of any legal action or relieve the permittee from any responsibilities, liabilities, or penalties established pursuant to any applicable state law or regulation under authority preserved by Section 510 of the Clean Water Act or state law.

10. Penalties for Violation of Permit Conditions

Pursuant to IC 13-30-4, a person who violates any provision of this permit, the water pollution control laws; environmental management laws; or a rule or standard adopted by the Environmental Rules Board is liable for a civil penalty not to exceed twenty-five thousand dollars ($25,000) per day of any violation.

Pursuant to IC 13-30-5, a person who obstructs, delays, resists, prevents, or interferes with (1) the department; or (2) the department's personnel or designated agent in the performance of an inspection or investigation performed under IC 13-14-2-2 commits a class C infraction.

Pursuant to IC 13-30-10-1.5(e), a person who willfully or negligently violates any NPDES permit condition or filing requirement, or any applicable standards or limitations of IC 13-18-3-2.4, IC 13-18-4-5, IC 13-18-12, IC 13-18-14, IC 13-18-15, or IC 13-18-16, commits a Class A misdemeanor.

Pursuant to IC 13-30-10-1.5(i), an offense under IC 13-30-10-1.5(e) is a Level 4 felony if the person knowingly commits the offense and knows that the commission of the offense places another person in imminent danger of death or serious bodily injury. The offense becomes a Level 3 felony if it results in serious bodily injury to any person, and a Level 2 felony if it results in death to any person.

Pursuant to IC 13-30-10-1.5(g), a person who willfully or recklessly violates any applicable standards or limitations of IC 13-18-8 commits a Class B misdemeanor.

Pursuant to IC 13-30-10-1.5(h), a person who willfully or recklessly violates any applicable standards or limitations of IC 13-18-9, IC 13-18-10, or IC 13-18-10.5 commits a Class C misdemeanor.

Pursuant to IC 13-30-10-1, a person who knowingly or intentionally makes any false material statement, representation, or certification in any NPDES form, notice, or report commits a Class B misdemeanor.

11. Penalties for Tampering or Falsification

In accordance with 327 IAC 5-2-8(10), the permittee shall comply with monitoring, recording, and reporting requirements of this permit. The Clean Water Act, as well as IC 13-30-10-1, provides that any person who knowingly or intentionally (a) destroys, alters, conceals, or falsely certifies a record, (b) tampers with, falsifies, or renders inaccurate or inoperative a recording or monitoring device or method, including the data gathered from the device or method, or (c) makes a false material statement or representation in any label, manifest, record, report, or other document; all required to be maintained under the terms of a permit issued by the department commits a Class B misdemeanor.

12. Toxic Pollutants

If any applicable effluent standard or prohibition (including any schedule of compliance specified in such effluent standard or prohibition) is established under Section 307(a) of the Clean Water Act for a toxic pollutant injurious to human health, and that standard or prohibition is more stringent than any limitation for such pollutant in this permit, this permit shall be modified or revoked and reissued to conform to the toxic effluent standard or prohibition in accordance with 327 IAC 5-2-8(5). Effluent standards or prohibitions established under Section 307(a) of the Clean Water Act for toxic pollutants injurious to human health are effective and must be complied with, if applicable to the permittee, within the time provided in the implementing regulations, even absent permit modification.

13. Wastewater treatment plant and certified operators

The permittee shall have the wastewater treatment facilities under the responsible charge of an operator certified by the Commissioner in a classification corresponding to the classification of the wastewater treatment plant as required by IC 13-18-11-11 and 327 IAC 5-22. In order to operate a wastewater treatment plant the operator shall have qualifications as established in 327 IAC 5-22-7.

327 IAC 5-22-10.5(a) provides that a certified operator may be designated as being in responsible charge of more than one (1) wastewater treatment plant, if it can be shown that he will give adequate supervision to all units involved. Adequate supervision means that sufficient time is spent at the plant on a regular basis to assure that the certified operator is knowledgeable of the actual operations and that test reports and results are representative of the actual operations conditions. In accordance with 327 IAC 5-22-3(11), “responsible charge operator” means the person responsible for the overall daily operation, supervision, or management of a wastewater facility.

Pursuant to 327 IAC 5-22-10(4), the permittee shall notify IDEM when there is a change of the person serving as the certified operator in responsible charge of the wastewater treatment facility. The notification shall be made no later than thirty (30) days after a change in the operator.

14. Construction Permit

In accordance with IC 13-14-8-11.6, a discharger is not required to obtain a state permit for the modification or construction of a water pollution treatment or control facility if the discharger has an effective NPDES permit.

If the discharger modifies their existing water pollution treatment or control facility or constructs a new water pollution treatment or control facility for the treatment or control of any new influent pollutant or increased levels of any existing pollutant, then, within thirty (30) days after commencement of operation, the discharger shall file with the Department of Environment Management a notice of installation for the additional pollutant control equipment and a design summary of any modifications.

The notice and design summary shall be sent to the Office of Water Quality, Industrial NPDES Permits Section, 100 North Senate Avenue, Indianapolis, IN 46204-2251.

15. Inspection and Entry

In accordance with 327 IAC 5-2-8(8), the permittee shall allow the Commissioner, or an authorized representative, (including an authorized contractor acting as a representative of the Commissioner) upon the presentation of credentials and other documents as may be required by law, to:

a. Enter upon the permittee's premises where a regulated facility or activity is located or conducted, or where records must be kept pursuant to the conditions of this permit;

b. Have access to and copy, at reasonable times, any records that must be kept under the terms and conditions of this permit;

c. Inspect at reasonable times any facilities, equipment or methods (including monitoring and control equipment), practices, or operations regulated or required pursuant to this permit; and

d. Sample or monitor at reasonable times, any discharge of pollutants or internal wastestreams for the purposes of evaluating compliance with the permit or as otherwise authorized.

16. New or Increased Discharge of Pollutants

This permit prohibits the permittee from undertaking any action that would result in a new or increased discharge of a bioaccumulative chemical of concern (BCC) or a new or increased permit limit for a regulated pollutant that is not a BCC unless one of the following is completed prior to the commencement of the action:

a. Information is submitted to the Commissioner demonstrating that the proposed new or increased discharges will not cause a significant lowering of water quality as defined under 327 IAC 2-1.3-2(50). Upon review of this information, the Commissioner may request additional information or may determine that the proposed increase is a significant lowering of water quality and require the submittal of an antidegradation demonstration.

b. An antidegradation demonstration is submitted to and approved by the Commissioner in accordance with 327 IAC 2-1.3-5 and 327 IAC 2-1.3-6.

B. MANAGEMENT REQUIREMENTS

1. Proper Operation and Maintenance

The permittee shall at all times maintain in good working order and efficiently operate all facilities and systems (and related appurtenances) for the collection and treatment which are installed or used by the permittee and which are necessary for achieving compliance with the terms and conditions of this permit in accordance with 327 IAC 5-2-8(9).

Neither 327 IAC 5-2-8(9), nor this provision, shall be construed to require the operation of installed treatment facilities that are unnecessary for achieving compliance with the terms and conditions of the permit.

2. Bypass of Treatment Facilities

Pursuant to 327 IAC 5-2-8(12), the following are requirements for bypass:

a. The following definitions:

(1) “Bypass” means the intentional diversion of a waste stream from any portion of a treatment facility.

(2) “Severe property damage” means substantial physical damage to property, damage to the treatment facilities which would cause them to become inoperable, or substantial and permanent loss of natural resources which can reasonably be expected to occur in the absence of a bypass. Severe property damage does not mean economic loss caused by delays in production.

b. The permittee may allow a bypass to occur that does not cause a violation of the effluent limitations contained in this permit, but only if it is also for essential maintenance to assure efficient operation. These bypasses are not subject to Part II.B.2.c. and d.

c. The permittee must provide the Commissioner with the following notice:

(1) If the permittee knows or should have known in advance of the need for a bypass (anticipated bypass), it shall submit prior written notice. If possible, such notice shall be provided at least ten (10) days before the date of the bypass for approval by the Commissioner.

(2) As required by 327 IAC 5-2-8(11)(C), the permittee shall orally report an unanticipated bypass that exceeds any effluent limitations in the permit within twenty-four (24) hours from the time the permittee becomes aware of such noncompliance. A written submission shall also be provided within five (5) days of the time the permittee becomes aware of the circumstances. The written submission shall contain a description of the noncompliance and its cause; the period of noncompliance, including exact dates and times; and if the cause of noncompliance has not been corrected, the anticipated time it is expected to continue; and steps taken or planned to reduce, eliminate and prevent recurrence of the noncompliance. If a complete report is submitted by e-mail within 24 hours of the noncompliance, then that e-mail report will satisfy both the oral and written reporting requirement. E-mails should be sent to wwreports@idem.in.gov.

d. The following provisions are applicable to bypasses:

(1) Except as provided by Part II.B.2.b., bypass is prohibited, and the Commissioner may take enforcement action against a permittee for bypass, unless the following occur:

(A) Bypass was unavoidable to prevent loss of life, personal injury, or severe property damage.

(B) There were no feasible alternatives to the bypass, such as the use of auxiliary treatment facilities, retention of untreated wastes, or maintenance during normal periods of equipment down time. This condition is not satisfied if adequate back-up equipment should have been installed in the exercise of reasonable engineering judgment to prevent a bypass that occurred during normal periods of equipment downtime or preventive maintenance.

(C) The permittee submitted notices as required under Part II.B.2.c.

(2) The Commissioner may approve an anticipated bypass, after considering its adverse effects, if the Commissioner determines that it will meet the conditions listed above in Part II.B.2.d.(1). The Commissioner may impose any conditions determined to be necessary to minimize any adverse effects.

e. Bypasses that result in death or acute injury or illness to animals or humans must be reported in accordance with the "Spill Response and Reporting Requirements" in 327 IAC 2-6.1, including calling 888/233-7745 as soon as possible, but within two (2) hours of discovery. However, under 327 IAC 2-6.1-3(1), when the constituents of the bypass are regulated by this permit, and death or acute injury or illness to animals or humans does not occur, the reporting requirements of 327 IAC 2-6.1 do not apply.

3. Upset Conditions

Pursuant to 327 IAC 5-2-8(13):

a. "Upset" means an exceptional incident in which there is unintentional and temporary noncompliance with technology-based permit effluent limitations because of factors beyond the reasonable control of the permittee. An upset does not include noncompliance to the extent caused by operational error, improperly designed treatment facilities, inadequate treatment facilities, lack of preventive maintenance, or careless or improper operation.

b. An upset shall constitute an affirmative defense to an action brought for noncompliance with such technology-based permit effluent limitations if the requirements of Paragraph c of this section, are met.

c. A permittee who wishes to establish the affirmative defense of upset shall demonstrate, through properly signed, contemporaneous operating logs or other relevant evidence, that:

(1) An upset occurred and the permittee has identified the specific cause(s) of the upset;

(2) The permitted facility was at the time being properly operated;

(3) The permittee complied with any remedial measures required under Part II.A.2; and

(4) The permittee submitted notice of the upset as required in the "Twenty-Four Hour Reporting Requirements," Part II.C.3, or 327 IAC 2-6.1, whichever is applicable. However, under 327 IAC 2-6.1-3(1), when the constituents of the discharge are regulated by this permit, and death or acute injury or illness to animals or humans does not occur, the reporting requirements of 327 IAC 2-6.1 do not apply.

d. In any enforcement proceeding, the permittee seeking to establish the occurrence of an upset has the burden of proof pursuant to 40 CFR 122.41(n)(4).

4. Removed Substances

Solids, sludges, filter backwash, or other pollutants removed from or resulting from treatment or control of wastewaters shall be disposed of in a manner such as to prevent any pollutant from such materials from entering waters of the State and to be in compliance with all Indiana statutes and regulations relative to liquid and/or solid waste disposal. The discharge of pollutants in treated wastewater is allowed in compliance with the applicable effluent limitations in Part I. of this permit.

C. REPORTING REQUIREMENTS

1. Planned Changes in Facility or Discharge

Pursuant to 327 IAC 5-2-8(11)(F), the permittee shall give notice to the Commissioner as soon as possible of any planned physical alterations or additions to the permitted facility. In this context, permitted facility refers to a point source discharge, not a wastewater treatment facility. Notice is required only when either of the following applies:

a. The alteration or addition may meet one of the criteria for determining whether the facility is a new source as defined in 327 IAC 5-1.5.

b. The alteration or addition could significantly change the nature of, or increase the quantity of, pollutants discharged. This notification applies to pollutants that are subject neither to effluent limitations in Part I.A. nor to notification requirements in Part II.C.9. of this permit.

Following such notice, the permit may be modified to revise existing pollutant limitations and/or to specify and limit any pollutants not previously limited.

2. Monitoring Reports

Pursuant to 327 IAC 5-2-8(10) and 327 IAC 5-2-13 through 15, monitoring results shall be reported at the intervals and in the form specified in “Monthly Reporting”, Part I.C.2.

3. Twenty-Four Hour Reporting Requirements

Pursuant to 327 IAC 5-2-8(11)(C), the permittee shall orally report to the Commissioner information on the following types of noncompliance within 24 hours from the time permittee becomes aware of such noncompliance. If the noncompliance meets the requirements of item b (Part II.C.3.b) or 327 IAC 2-6.1, then the report shall be made within those prescribed time frames. However, under 327 IAC 2-6.1-3(1), when the constituents of the discharge that is in noncompliance are regulated by this permit, and death or acute injury or illness to animals or humans does not occur, the reporting requirements of 327 IAC 2-6.1 do not apply.

a. Any unanticipated bypass which exceeds any effluent limitation in the permit;

b. Any noncompliance which may pose a significant danger to human health or the environment. Reports under this item shall be made as soon as the permittee becomes aware of the noncomplying circumstances; or

c. Any upset (as defined in Part II.B.3 above) that causes an exceedance of any effluent limitation in the permit.

The permittee can make the oral reports by calling (317)232-8670 during regular business hours and asking for the Compliance Data Section or by calling (317) 233-7745 ((888)233-7745 toll free in Indiana) during non-business hours. A written submission shall also be provided within 5 days of the time the permittee becomes aware of the circumstances. The written submission shall contain a description of the noncompliance and its cause; the period of noncompliance, including exact dates and times, and, if the noncompliance has not been corrected, the anticipated time it is expected to continue; and steps taken or planned to reduce and eliminate the noncompliance and prevent its recurrence. The Commissioner may waive the written report on a case-by-case basis if the oral report has been received within 24 hours.

Alternatively the permittee may submit a “Bypass/Overflow Report” (State Form 48373) or a “Noncompliance 24-Hour Notification Report” (State Form 52415), whichever is appropriate, to IDEM at (317) 232-8637 or wwreports@idem.in.gov. If a complete e-mail submittal is sent within 24 hours of the time that the permittee became aware of the occurrence, then the email report will satisfy both the oral and written reporting requirements.

4. Other Compliance/Noncompliance Reporting

Pursuant to 327 IAC 5-2-8(11)(D), the permittee shall report any instance of noncompliance not reported under the “Twenty-Four Hour Reporting Requirements” in Part II.C.3, or any compliance schedules at the time the pertinent Discharge Monitoring Report is submitted. The report shall contain the information specified in Part II.C.3;

The permittee shall also give advance notice to the Commissioner of any planned changes in the permitted facility or activity which may result in noncompliance with permit requirements; and

All reports of compliance or noncompliance with, or any progress reports on, interim and final requirements contained in any compliance schedule of this permit shall be submitted no later than 14 days following each schedule date.

5. Other Information

Pursuant to 327 IAC 5-2-8(11)(E), where the permittee becomes aware of a failure to submit any relevant facts or submitted incorrect information in a permit application or in any report, the permittee shall promptly submit such facts or corrected information to the Commissioner.

6. Signatory Requirements

Pursuant to 327 IAC 5-2-22 and 327 IAC 5-2-8(15):

a. All reports required by the permit and other information requested by the Commissioner shall be signed and certified by a person described below or by a duly authorized representative of that person:

(1) For a corporation: by a responsible corporate officer. A “responsible corporate officer” means either of the following:

(A) A president, secretary, treasurer, any vice president of the corporation in charge of a principal business function, or any other person who performs similar policymaking or decision making functions for the corporation; or

(B) The manager of one (1) or more manufacturing, production, or operating facilities provided the manager is authorized to make management decisions that govern the operation of the regulated facility including having the explicit or implicit duty to make major capital investment recommendations, and initiating and directing other comprehensive measures to assure long-term environmental compliance with environmental laws and regulations; the manager can ensure that the necessary systems are established or actions taken to gather complete and accurate information for permit application requirements; and where authority to sign documents has been assigned or delegated to the manager in accordance with corporate procedures.

(2) For a partnership or sole proprietorship: by a general partner or the proprietor, respectively; or

(3) For a Federal, State, or local governmental body or any agency or political subdivision thereof: by either a principal executive officer or ranking elected official.

b. A person is a duly authorized representative only if:

(1) The authorization is made in writing by a person described above.

(2) The authorization specifies either an individual or a position having responsibility for the overall operation of the regulated facility or activity, such as the position of plant manager, operator of a well or a well field, superintendent, or position of equivalent responsibility. (A duly authorized representative may thus be either a named individual or any individual occupying a named position.); and

(3) The authorization is submitted to the Commissioner.

c. Electronic Signatures. If documents described in this section are submitted electronically by or on behalf of the NPDES-regulated facility, any person providing the electronic signature for such documents shall meet all relevant requirements of this section, and shall ensure that all of the relevant requirements of 40 CFR part 3 (including, in all cases, subpart D to part 3) (Cross-Media Electronic Reporting) and 40 CFR part 127 (NPDES Electronic Reporting Requirements) are met for that submission.

d. Certification. Any person signing a document identified under Part II.C.6., shall make the following certification:

"I certify under penalty of law that this document and all attachments were prepared under my direction or supervision in accordance with a system designed to assure that qualified personnel properly gather and evaluate the information submitted. Based on my inquiry of the person or persons who manage the system, or those persons directly responsible for gathering the information, the information submitted is, to the best of my knowledge and belief, true, accurate, and complete. I am aware that there are significant penalties for submitting false information, including the possibility of fine and imprisonment for knowing violations."

7. Availability of Reports

Except for data determined to be confidential under 327 IAC 12.1, all reports prepared in accordance with the terms of this permit shall be available for public inspection at the offices of the Indiana Department of Environmental Management and the Regional Administrator. As required by the Clean Water Act, permit applications, permits, and effluent data shall not be considered confidential.

8. Penalties for Falsification of Reports

IC 13-30 and 327 IAC 5-2-8(15) provides that any person who knowingly makes any false statement, representation, or certification in any record or other document submitted or required to be maintained under this permit, including monitoring reports or reports of compliance, shall, upon conviction, be punished by a fine of not more than $10,000 per violation, or by imprisonment for not more than 180 days per violation, or by both.

9. Changes in Discharge of Toxic Substances

Pursuant to 327 IAC 5-2-9, the permittee shall notify the Commissioner as soon as it knows or has reason to know:

a. That any activity has occurred or will occur which would result in the discharge of any toxic pollutant that is not limited in the permit if that discharge will exceed the highest of the following notification levels.

(1) One hundred micrograms per liter (100 µg/l);

(2) Two hundred micrograms per liter (200 µg/l) for acrolein and acrylonitrile; five hundred micrograms per liter (500 µg/l) for 2,4-dinitrophenol and 2-methyl-4,6-dinitrophenol; and one milligram per liter (1 mg/l) for antimony;

(3) Five (5) times the maximum concentration value reported for that pollutant in the permit application in accordance with 40 CFR 122.21(g)(7); or

(4) A notification level established by the Commissioner on a case-by-case basis, either at the Commissioner's own initiative or upon a petition by the permittee. This notification level may exceed the level specified in subdivisions (1), (2), or (3) but may not exceed the level which can be achieved by the technology-based treatment requirements applicable to the permittee under the CWA (see 327 IAC 5-5-2).

b. That it has begun or expects to begin to use or manufacture, as an intermediate or final product or byproduct, any toxic pollutant that was not reported in the permit application under 40 CFR 122.21(g)(9). However, this subsection b. does not apply to the permittee's use or manufacture of a toxic pollutant solely under research or laboratory conditions.

10. Future Electronic Reporting Requirements

IDEM is currently developing the technology and infrastructure necessary to allow compliance with the EPA Phase 2 e-reporting requirements per 40 CFR 127.16 and to allow electronic reporting of applications, notices, plans, reports, and other information not covered by the federal e-reporting regulations.

IDEM will notify the permittee when IDEM's e-reporting system is ready for use for one or more applications, notices, plans, reports, or other information. This IDEM notice will identify the specific applications, notices, plans, reports, or other information that are to be submitted electronically and the permittee will be required to use the IDEM electronic reporting system to submit the identified application(s), notice(s), plan(s), report(s), or other information.

See Part I.C.2. of this permit for the current electronic reporting requirements for the submittal of monthly monitoring reports such as the Discharge Monitoring Report (DMR) and the Monthly Monitoring Report (MMR).

National Pollutant Discharge Elimination System

Briefing Memo for
Ingredion Incorporated Indianapolis Plant
Draft: August 2021
Final:

Indiana Department of Environmental Management

100 North Senate Avenue
Indianapolis, Indiana 46204
(317) 232-8603
Toll Free (800) 451-6027
www.idem.IN.gov

Permittee:	Ingredion Incorporated 1515 S. Drover Street Indianapolis, IN 46221
Existing Permit Information:	Permit Number: IN0063878 Expiration Date: October 31, 2021
Facility Contact:	Melissa Putman, Environmental Manager Melissa.putman@ingredion.com or (317)656-2356
Facility Location:	Ingredion Incorporated Indianapolis Plant 1515 S. Drover Street Indianapolis, IN 46221 Marion County
Receiving Stream(s):	West Fork of the White River
GLI/Non-GLI:	Non-GLI
Proposed Permit Action:	Renew
Date Application Received:	May 4, 2021
Source Category	NPDES Minor – Industrial
Permit Writer:	Richard Hamblin rhamblin@idem.in.gov or (317)232-8696

Table of Contents

1.0 Introduction 3
2.0 Facility Description 3
2.1 General 3
2.2 Outfall Locations 5
2.3 Wastewater Treatment 5
2.4 Changes in Operation 7
2.5 Facility Storm Water 7
3.0 Permit History 7
3.1 Compliance History 7
4.0 Location Of Discharge/Receiving Water Use Designation 7
4.1 Total Maximum Daily Loads (TMDLs) 8
5.0 Permit Limitations 8
5.1 Technology-Based Effluent Limits (TBEL) 8
5.2 Water Quality-Based Effluent Limits 8
5.3 Effluent Limitations and Monitoring Requirements by Outfall 9
5.4 Whole Effluent Toxicity (WET) Testing 10
5.5 Antibacksliding 10
5.6 Antidegradation 10
5.7 Storm Water 10
5.8 Water Treatment Additives 13
6.0 Permit Draft Discussion 14
6.1 Discharge Limitations, Monitoring Conditions and Rationale 14
6.2 Schedule of Compliance 14
6.3 Special Conditions and Other Permit Requirements 14
6.4 Spill Response and Reporting Requirement 14
6.5 Permit Processing/Public Comment 15

1.0 INTRODUCTION

The Indiana Department of Environmental Management (IDEM) received a National Pollutant Discharge Elimination System (NPDES) Permit application from the permittee on May 4, 2021.

In accordance with 327 IAC 5-2-6(a), the current five year permit was issued with an effective date of November 1, 2016. The permit was subsequently modified on December 20, 2018. A five year permit is proposed in accordance with 327 IAC 5-2-6(a).

The Federal Water Pollution Control Act (more commonly known as the Clean Water Act), as amended, (Title 33 of the United States Code (U.S.C.) Section 1251 *et seq.*), requires an NPDES permit for the discharge of pollutants into surface waters. Furthermore, Indiana law requires a permit to control or limit the discharge of any contaminants into state waters or into a publicly owned treatment works. This proposed permit action by IDEM complies with and implements these federal and state requirements.

In accordance with Title 40 of the Code of Federal Regulations (CFR) Section 124.7, as well as Title 327 of the Indiana Administrative Code (IAC) 327 Article 5-3-7, a Statement of Basis, or Briefing Memo, is required for certain NPDES permits. This document fulfills the requirements established in these regulations. This Briefing Memo was prepared in order to document the factors considered in the development of NPDES Permit effluent limitations. The technical basis for the Briefing Memo may consist of evaluations of promulgated effluent guidelines, existing effluent quality, receiving water conditions, Indiana water quality standards-based wasteload allocations, and other information available to IDEM. Decisions to award variances to Water Quality Standards or promulgated effluent guidelines are justified in the Briefing Memo where necessary.

2.0 FACILITY DESCRIPTION

2.1 General

The facility is classified under Standard Industrial Classification (SIC) Code 2046 – Wet Corn Milling. The facility conducts wet corn milling and produces starch products and corn co-products for sale to food and industrial businesses. Starch is obtained through chemical treatment and physical separation of corn kernel components. In the separation process, corn by-products are also produced that are sold to the corn oil industry or as animal feed.

The source water for the facility is well water and municipal water.

A map showing the location of the facility has been included as Figure 1.

Figure 1: Facility Location

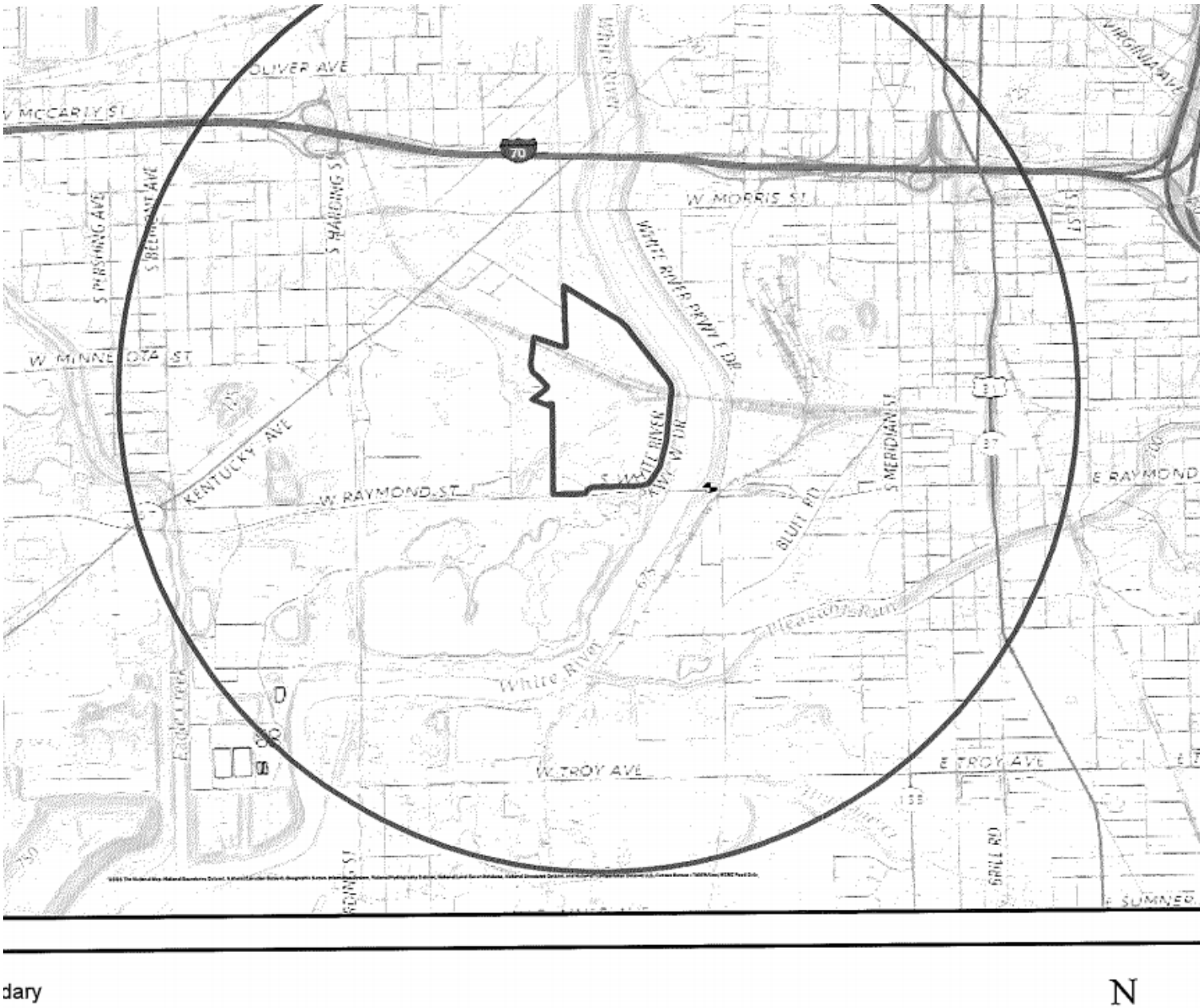

dary

N

1515 S. Drover Street
Indianapolis, IN – Marion County

2.2 Outfall Locations

Outfall 001	Latitude: 39º 44’ 28.78” Longitude: -86º 10’ 25”
Outfall 002	Latitude: 39º 44’ 50” Longitude: -86º 10’ 27”
Outfall 003	Latitude: 39º 44’ 41” Longitude: -86º 10’ 27”

2.3 Wastewater Treatment

Outfalls 001 and 002 discharge storm water only. Please refer to Section 2.5 of this Briefing Memo for additional information on Outfalls 001 and 002.

The discharge from Outfall 003 consists of noncontact cooling water. The discharge flow can range from 0 to 2,000 gallons per minute (gpm) dependent on process cooling needs of the plant at any given time. Flow is expected to be higher in warmer months. Noncontact cooling waters from the Fluid Bed Reactor (FBR), West Tankhouse, and West Millhouse are collected in a cooling water collection tank prior to discharge via Outfall 003. Water from the collection tank is pumped to combine with cooling water from the Tankhouse in-line and from there, all streams flow to a stormwater manhole and then to the river. A Water Balance Diagram has been included as Figure 2.

The permittee shall have the wastewater treatment facilities under the responsible charge of an operator certified by the Commissioner in a classification corresponding to the classification of the wastewater treatment plant as required by IC 13-18-11-11 and 327 IAC 5-22-5. In order to operate a wastewater treatment plant the operator shall have qualifications as established in 327 IAC 5-22-7.

IDEM has determined that the permittee doesn’t qualify for an industrial wastewater treatment plant classification because the wastewater is not treated prior to discharge.

Figure 2: Water Balance Diagram

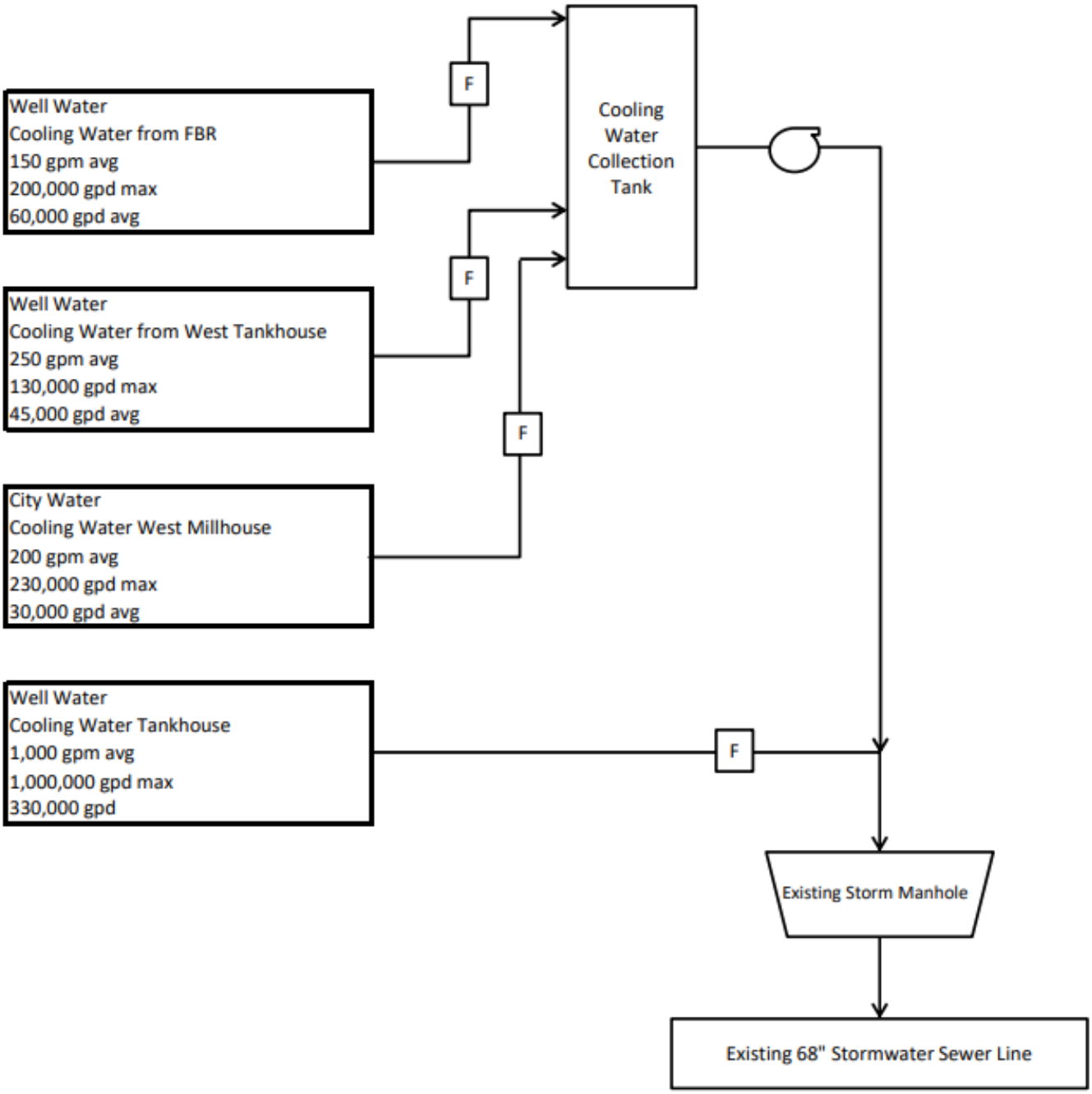

Outfall 003: The average daily discharge from Outfall 003 to the West Fork of the White River is 0.27 MGD. The design flow (highest monthly average) based on the most recent 2 years of data is 0.71 MGD.

2.4 Changes in Operation

The existing permit was modified on December 20, 2018, to incorporate Outfalls 001 and 002 as stormwater outfalls. In the permit renewal application, no changes in operation were identified as occurring since the previous permit renewal.

2.5 Facility Storm Water

Storm water associated with this facility was previously covered under General Industrial Storm Water Permit INRM01454. On December 20, 2018, this individual NPDES permit was modified to incorporate the outfalls associated with the General Industrial Storm Water Permit into the individual NPDES Permit, Outfalls 001 and 002.

Outfall 001 discharges stormwater from approximately 100 acres, with approximately 30.5 acres of impervious surface. Stormwater from the impervious surface area is directed to a retention pond that is closed at the discharge point. Stormwater is pumped to combine with the facility's other industrial discharge and sent to Citizen's Water Authority wastewater treatment plant. The facility has permitted coverage with Citizens Water Authority (Permit #204602).

Outfall 002 discharges stormwater from approximately 28.5 acres, with approximately 22 acres of impervious surface. There are no exposed materials stored in this area. Outfall 002 discharge is free-flow (gravity flow) to a city stormwater manhole which discharges to the river.

3.0 PERMIT HISTORY

3.1 Compliance History

A review of this facility's discharge monitoring data was conducted for compliance verification. This review indicates the following permit limitation violations at Outfall 003 between September 2019 and July 2021; one violation for daily maximum and monthly average for TRC [7/20]. There are no pending or current enforcement actions regarding this NPDES permit.

4.0 LOCATION OF DISCHARGE/RECEIVING WATER USE DESIGNATION

The receiving stream for Outfall 003 is the West Fork of the White River. The $Q_{7,10}$ low flow value of the West Fork of the White River is 69 cfs and shall be capable of supporting a well-balanced, warm water aquatic community and full body contact recreation in accordance with 327 IAC 2-1-3.

The permittee discharges to a waterbody that has been identified as a water of the state that is not within the Great Lakes system. Therefore it is subject to NPDES requirements specific to dischargers not discharging to waters within the Great Lakes system under 327 IAC 2-1 and 327 IAC 5-2-11.1. These rules contain applicable water quality standards and the procedures to calculate and incorporate water quality-based effluent limitations.

4.1 Total Maximum Daily Loads (TMDLs)

Section 303(d) of the Clean Water Act requires states to identify waters, through their Section 305(b) water quality assessments, that do not or are not expected to meet applicable water quality standards with federal technology based standards alone. States are also required to develop a priority ranking for these waters taking into account the severity of the pollution and the designated uses of the waters. Once this listing and ranking of impaired waters is completed, the states are required to develop Total Maximum Daily Loads (TMDLs) for these waters in order to achieve compliance with the water quality standards. Indiana's 2018 303(d) List of Impaired Waters was developed in accordance with Indiana's Water Quality Assessment and 303(d) Listing Methodology for Waterbody Impairments and Total Maximum Daily Load Development for the 2018 Cycle.

The White River, Assessment-Unit INW01C5_06, HUC 051202011205, is on the 2020 303(d) list for impairments. The impairments include E. coli, recreational use, PCBs in Fish Tissue, and fish consumption.

A TMDL for the White River has been developed for E. coli approved on 3/31/2004. E. coli is not a pollutant of concern regarding the discharge from this facility. Therefore, the TMDL does not impact the effluent limitations of this permit.

5.0 PERMIT LIMITATIONS

5.1 Technology-Based Effluent Limits (TBEL)

TBELs require every individual member of a discharge class or category to operate their water pollution control technologies according to industry-wide standards and accepted engineering practices. TBELs are developed by applying the National Effluent Limitation Guidelines (ELGs) established by EPA for specific industrial categories. Technology-based treatment requirements established pursuant to sections 301(b) and 306 of the CWA represent the minimum level of control that must be imposed in an NPDES permit (327 IAC 5-5-2(a)).

The applicable technology-based standards for wet milling facilities are contained in 40 CFR 406 – Grain Mills Point Source Category. The EPA established mass based limitations expressed in terms of allowable pollutant discharge per unit of production or some other measure of production (i.e., production normalized). However, none of the mass based limitations identified in 40 CFR 406 regulate the discharge of noncontact cooling water. Therefore, there are no TBELs included in this permit.

5.2 Water Quality-Based Effluent Limits

WQBELs are designed to be protective of the beneficial uses of the receiving water and are independent of the available treatment technology. The WQBELs for this facility are based on water quality criteria in 327 IAC 2-1-6 or developed under the procedures described in 327 IAC 2-1-8.2 through 8.7 and 327 IAC 2-1-8.9, and implementation procedures in 327 IAC 5. Limitations are required for any parameter which has the reasonable potential to exceed a water quality criterion as determined using the procedures under 327 IAC 5-2-11.1(h).

5.3 Effluent Limitations and Monitoring Requirements by Outfall

Under 327 IAC 5-2-10(a) (see also 40 CFR 122.44), NPDES permit requirements are technology-based effluent limitations and standards (including technology-based effluent limitations (TBELs) based on federal effluent limitations guidelines or developed on a case-by-case basis using best professional judgment (BPJ), where applicable), water quality standards-based, or based on other more stringent requirements. The decision to limit or monitor the parameters contained in this permit is based on information contained in the permittee's NPDES application and other available information relating to the facility and the receiving waterbody as well as the applicable federal effluent limitations guidelines. In addition, when renewing a permit, the existing permit limits, the antibacksliding requirements under 327 IAC 5-2-10(a)(11), and the antidegradation requirements under 327 IAC 2-1.3 must be considered.

5.3.1 All External Outfalls (001, 002, 003)

Narrative Water Quality Based Limits
The narrative water quality criteria contained under 327 IAC 2-1-6(a)(1) and (2) have been included in this permit to ensure that these minimum water quality conditions are met.

Flow
The effluent flow is to be monitored in accordance with 327 IAC 5-2-13(a)(2).

5.3.2 Outfall (003)

pH
Discharges to waters of the state are limited to the range of 6.0-9.0 s.u., in accordance with 327 IAC 2-1-6(b)(2).

Temperature
Effluent Limitations for temperature are based on the criteria established in 327 IAC 2-1-6(b)(4).

Oil and Grease (O & G)
Reporting requirements for O & G are retained in this permit. If O & G is found in measurable quantities (5 mg/l), the facility is required to investigate and eliminate any significant source to ensure compliance with narrative water quality criteria in 327 IAC 2-1-6(a)(1)(C) which prohibits oil or other substances in amounts sufficient to produce color, visible sheen, odor, or other conditions in such a degree as to create a nuisance.

Total Residual Chlorine (TRC)
Effluent limitations for TRC are retained from the previous permit. The facility utilizes chlorinated water as makeup water for cooling water purposed. Therefore, TRC is a pollutant of concern and is limited in the permit.

5.4 Whole Effluent Toxicity (WET) Testing

The permit does not contain a requirement to conduct whole effluent toxicity (WET) tests.

5.5 Antibacksliding

Pursuant to 327 IAC 5-2-10(a)(11), unless an exception applies, a permit may not be renewed, reissued or modified to contain effluent limitations that are less stringent than the comparable effluent limitations in the previous permit. None of the limits included in this permit are less stringent than the comparable effluent limitations in the previous permit, therefore, backsliding is not an issue in accordance with 327 IAC 5-2-10(a)(11).

5.6 Antidegradation

Indiana's Antidegradation Standards and Implementation procedures are outlined in 327 IAC 2-1.3. The antidegradation standards established by 327 IAC 2-1.3-3 apply to all surface waters of the state. The permittee is prohibited from undertaking any deliberate action that would result in a new or increased discharge of a bioaccumulative chemical of concern (BCC) or a new or increased permit limit for a regulated pollutant that is not a BCC unless information is submitted to the commissioner demonstrating that the proposed new or increased discharge will not cause a significant lowering of water quality, or an antidegradation demonstration submitted and approved in accordance 327 IAC 2-1.3-5 and 2-1.3-6.

The NPDES permit does not propose to establish a new or increased loading of a regulated pollutant; therefore, the Antidegradation Implementation Procedures in 327 IAC 2-1.3-5 and 2-1.3-6 do not apply to the permitted discharge.

5.7 Storm Water

Under 327 IAC 5-4-6(d), if an individual permit is required under 327 IAC 5-4-6(a) for discharges consisting entirely of storm water, or if an individual permit is required under 327 IAC 5-2-2 that includes discharge of commingled storm water associated with industrial activity, IDEM may consider the following in determining the requirements to be contained in the permit:

> (1) The provisions in the following: (A) 327 IAC 15-5, 327 IAC 15-6, and 327 IAC 15-13, as appropriate to the type of storm water discharge, (B) NPDES Pesticide General Permit for Point Source Discharges to Waters of the State from the Application of Pesticides, Permit Number ING870000, effective October 31, 2011, available at: http://www.in.gov/idem/cleanwater/2480.htm#pesticide or from the IDEM Office of Water Quality, Permits Branch, 100 North Senate Avenue, Indianapolis, IN 46204-2251, and (C) 327 IAC 5-2 [Basic NPDES Requirements], 327 IAC 5-5 [NPDES Criteria and Standards for Technology-based Treatment Requirements], and 327 IAC 5-9 [Best Management Practices; Establishment].
> (2) "Interim Permitting Approach for Water Quality-Based Effluent Limitations in Storm Water Permits", EPA 833-D-96-001, September 1, 1996, available from U.S. EPA, National Service Center for Environmental Publications at https://www.epa.gov/nscep or from IDEM.
> (3) The nature of the discharges and activities occurring at the site or facility.
> (4) Other information relevant to the potential impact on water quality.

In accordance with 327 IAC 15-2-2(a), the commissioner may regulate storm water discharges associated with industrial activity, as defined in 40 CFR 122.26(b)(14), consistent with the EPA 2008 NPDES Multi-Sector General Permit for Stormwater Discharges Associated with Industrial Activity, as modified, effective May 27, 2009, under an NPDES general permit.
Therefore, using Best Professional Judgment to develop case-by-case technology-based limits as authorized by 327 IAC 5-2-10, 327 IAC 5-5, and 327 IAC 5-9 (see also 40 CFR 122.44, 125.3, and Section 402(a)(1) of the Clean Water Act (CWA)), IDEM has developed storm water requirements for individual permits that are consistent with the EPA 2008 NPDES Multi-Sector General Permit for Stormwater Discharges Associated with Industrial Activity. The 2008 Multi-Sector General Permit and Fact Sheet is available from: https://www.epa.gov/npdes/previous-versions-epas-msgp-documents.

According to 40 CFR 122.26(b)(14) and 327 IAC 15-6-2 facilities classified under Standard Industrial Classification (SIC) Code 2046 – Wet Corn Milling, are considered to be engaging in "industrial activity" for purposes of 40 CFR 122.26(b). Therefore, the permittee is required to have all storm water discharges associated with industrial activity permitted. Treatment for storm water discharges associated with industrial activities is required to meet, at a minimum, best available technology economically achievable/best conventional pollutant control technology (BAT/BCT) requirements. EPA has determined that non-numeric technology-based effluent limits have been determined to be equal to the best practicable technology (BPT) or BAT/BCT for storm water associated with industrial activity.

Storm water associated with industrial activity must also be assessed to ensure compliance with all water quality standards. Effective implementation of the non-numeric technology-based requirements should, in most cases, control discharges as necessary to meet applicable water quality standards. Violation of any of these effluent limitations constitutes a violation of the permit.

Additionally, IDEM has determined that with the appropriate implementation of the required control measures and Best Management Practices (BMPs) found in Part I.D. of the permit, the discharge of storm water associated with industrial activity from this facility will meet applicable water quality standards and will not cause a significant lowering of water quality. Therefore, the storm water discharge is in compliance with the antidegradation standards found in 327 IAC 2-1.3-3, and pursuant to 327 IAC 2-1.3-4(a)(5), an antidegradation demonstration is not required.

The technology-based effluent limits (TBELs) require the permittee to minimize exposure of raw, final, or waste materials to rain, snow, snowmelt, and runoff. In doing so, the permittee is required, to the extent technologically available and economically achievable, to either locate industrial materials and activities inside or to protect them with storm resistant coverings. In addition, the permittee is required to: (1) use good housekeeping practices to keep exposed areas clean, (2) regularly inspect, test, maintain and repair all industrial equipment and systems to avoid situations that may result in leaks, spills, and other releases of pollutants in storm water discharges, (3) minimize the potential for leaks, spills and other releases that may be exposed to storm water and develop plans for effective response to such spills if or when they occur, (4) stabilize exposed area and contain runoff using structural and/or non-structural control measures to minimize onsite erosion and sedimentation, and the resulting discharge of pollutants, (5) divert, infiltrate, reuse, contain or otherwise reduce storm water runoff, to

minimize pollutants in the permitted facility discharges, (6) enclose or cover storage piles of salt or piles containing salt used for deicing or other commercial or industrial purposes, including maintenance of paved surfaces, (7) train all employees who work in areas where industrial materials or activities are exposed to storm water, or who are responsible for implementing activities necessary to meet the conditions of this permit (e.g., inspectors, maintenance personnel), including all members of your Pollution Prevention Team, (8) ensure that waste, garbage and floatable debris are not discharged to receiving waters by keeping exposed areas free of such materials or by intercepting them before they are discharged, and (9) minimize generation of dust and off-site tracking of raw, final or waste materials.

To meet the non-numeric effluent limitations in Part I.D.4, the permit requires the facility to select control measures (including BMPs) to address the selection and design considerations in Part I.D.3.

The permittee must control its discharge as necessary to meet applicable water quality standards. It is expected that compliance with the non-numeric technology-based requirements should ensure compliance with applicable water quality standards. However, if at any time the permittee, or IDEM, determines that the discharge causes or contributes to an exceedance of applicable water quality standards, the permittee must take corrective actions, and conduct follow-up monitoring and IDEM may impose additional water quality-based limitations.

"Terms and Conditions" to Provide Information in a Storm Water Pollution Prevention Plan (SWPPP)

Distinct from the effluent limitation provisions in the permit, the permit requires the discharger to prepare a SWPPP for the permitted facility. The SWPPP is intended to document the selection, design, installation, and implementation (including inspection, maintenance, monitoring, and corrective action) of control measures being used to comply with the effluent limits set forth in Part I.D. of the permit. In general, the SWPPP must be kept up-to-date, and modified when necessary, to reflect any changes in control measures that were found to be necessary to meet the effluent limitations in the permit.

The requirement to prepare a SWPPP is not an effluent limitation. Rather, it documents what practices the discharger is implementing to meet the effluent limitations in Part I.D. of the permit. The SWPPP is not an effluent limitation because it does not restrict quantities, rates, and concentrations of constituents which are discharged. Instead, the requirement to develop a SWPPP is a permit "term or condition" authorized under sections 402(a)(2) and 308 of the Act. Section 402(a)(2) states, "[t]he Administrator shall prescribe conditions for [NPDES] permits to assure compliance with the requirements of paragraph (1) of this subsection, including conditions on data and information collection, reporting, and such other requirements as he deems appropriate." The SWPPP requirements set forth in this permit are terms or conditions under the CWA because the discharger is documenting information on how it intends to comply with the effluent limitations (and inspection and evaluation requirements) contained elsewhere in the permit. Thus, the requirement to develop a SWPPP and keep it up-to-date is no different than other information collection conditions, as authorized by 327 IAC 5-1-3 (see also CWA section 402(a)(2)).

It should be noted that EPA has developed a guidance document, “Developing your Storm Water Pollution Prevention Plan – A guide for Industrial Operators (EPA 833-B09-002), February 2009, to assist facilities in developing a SWPPP. The guidance contains worksheets, checklists, and model forms that should assist a facility in developing a SWPPP.

Public availability of documents

Part I.E.2.d(2) of the permit requires that the permittee retain a copy of the current SWPPP at the facility and make it immediately available, at the time of an onsite inspection or upon request, to IDEM. When submitting the SWPPP to IDEM, if any information in the SWPPP is considered to be confidential, that information shall be submitted in accordance with 327 IAC 12.1. Interested persons can request a copy of the SWPPP through IDEM. Any information that is confidential pursuant to Indiana law will not be released to the public.

5.8 Water Treatment Additives

In the event that changes are to be made in the use of water treatment additives that could significantly change the nature of, or increase the discharge concentration of any of the additives contributing to an outfall governed under the permit, the permittee must apply for and obtain approval from IDEM prior to such discharge. Discharges of any such additives must meet Indiana water quality standards. The permittee must apply for permission to use water treatment additives by completing and submitting State Form 50000 (Application for Approval to Use Water Treatment Additives) available at: http://www.in.gov/idem/5157.htm and submitting any needed supplemental information. In the review and approval process, IDEM determines, based on the information submitted with the application, whether the use of any new or changed water treatment additives/chemicals or dosage rates could potentially cause the discharge from any permitted outfall to cause chronic or acute toxicity in the receiving water.

The authority for this requirement can be found under one or more of the following: 327 IAC 5-2-8(11)(B), which generally requires advance notice of any planned changes in the permitted facility, any activity, or other circumstances that the permittee has reason to believe may result in noncompliance with permit requirements; 327 IAC 5-2-8(11)(F)(ii), which generally requires notice as soon as possible of any planned physical alterations or additions to the permitted facility if the alteration or addition could significantly change the nature of, or increase the quantity of, pollutants discharged; and 327 IAC 5-2-9(2) which generally requires notice as soon as the discharger knows or has reason to know that the discharger has begun or expects to begin to use or manufacture, as an intermediate or final product or byproduct, any toxic pollutant that was not reported in the permit application.

The following is a list of water treatment additives currently approved for use at the facility: Sodium Bisulfite as a dechlorinator.

6.0 PERMIT DRAFT DISCUSSION

6.1 Discharge Limitations, Monitoring Conditions and Rationale

The proposed final effluent limitations are based on the more stringent of the Indiana water quality-based effluent limitations (WQBELs), technology-based effluent limitations (TBELs), or approved total maximum daily loads (TMDLs) and NPDES regulations as appropriate for each regulated outfall. Section 5.3 of this document explains the rationale for the effluent limitations at each Outfall.

Analytical and sampling methods used shall conform to the version of 40 CFR 136 as referenced in 327 IAC 5-2-13(d)(1) and 327 IAC 5-2-1.5.

Nothing has changed to warrant modifying the monitoring conditions.

Outfall 003:

Parameter	Monthly Average	Daily Maximum	Units	Minimum Frequency	Sample Type
Flow	Report	Report	MGD	2 X Monthly	24-Hr. Total
Oil and Grease	------	Report	mg/l	2 X Monthly	Grab
Temperature	Report	Report	°F	2 X Monthly	Grab
TRC	0.02	0.04	mg/l	2 X Monthly	Grab

Parameter	Daily Minimum	Daily Maximum	Units	Minimum Frequency	Sample Type
pH	6.0	9.0	Std Units	2 X Monthly	Grab

6.2 Schedule of Compliance

The circumstances in this NPDES permit do not qualify for a schedule of compliance.

6.3 Special Conditions and Other Permit Requirements

There are no special conditions on this permit.

6.4 Spill Response and Reporting Requirement

Reporting requirements associated with the Spill Reporting, Containment, and Response requirements of 327 IAC 2-6.1 are included in Part II.B.2.(d), Part II.B.3.(c), and Part II.C.3. of the NPDES permit. Spills from the permitted facility meeting the definition of a spill under 327 IAC 2-6.1-4(15), the applicability requirements of 327 IAC 2-6.1-1, and the Reportable Spills requirements of 327 IAC 2-6.1-5 (other than those meeting an exclusion under 327 IAC 2-6.1-3 or the criteria outlined below) are subject to the Reporting Responsibilities of 327 IAC 2-6.1-7.

It should be noted that the reporting requirements of 327 IAC 2-6.1 do not apply to those discharges or exceedances that are under the jurisdiction of an applicable permit when the substance in question is covered by the permit and death or acute injury or illness to animals or humans does not occur. In order for a discharge or exceedance to be under the jurisdiction of this NPDES permit, the substance in question (a) must have been discharged in the normal course of operation from an outfall listed in this permit, and (b) must have been discharged from an outfall for which the permittee has authorization to discharge that substance.

6.5 Permit Processing/Public Comment

Pursuant to IC 13-15-5-1, IDEM will publish the draft permit document online at https://www.in.gov/idem/public-notices/. Additional information on public participation can be found in the "Citizens' Guide to IDEM", available at https://www.in.gov/idem/resources/citizens-guide-to-idem/. A 30-day comment period is available to solicit input from interested parties, including the public.