National Pollutant Discharge Elimination System
Fact Sheet for

ArcelorMittal Indiana Harbor LLC – Indiana Harbor West

Draft: April 2017
Final:

Indiana Department of Environmental Management
100 North Senate Avenue
Indianapolis, Indiana 46204
(317) 232-8603
Toll Free (800) 451-6027
www.idem.IN.gov

Permittee:	ArcelorMittal Indiana Harbor, LLC – Indiana Harbor West 3001 Dickey Road East Chicago, Indiana 46312
Existing Permit Information:	Permit Number: IN0000205 Administratively Extended Since: 11/30/16
Facility Contact:	Wendell Carter (219)391-2834
Facility Location:	Indiana Harbor West 3001 Dickey Road East Chicago, Indiana Lake County
Receiving Stream:	Indiana Harbor Ship Canal Indiana Harbor Lake Michigan
GLI/Non-GLI:	GLI
Proposed Permit Action:	Renew
Date Application Received:	6/3/16
Source Category	NPDES Major – Industrial
Permit Writer:	Richard Hamblin (317)232-8696 or rhamblin@idem.in.gov

Table of Contents

1.0 Introduction 3
2.0 Facility description 3
2.1 General 3
2.2 Outfall Locations 4
2.3 Wastewater Treatment 5
2.4 Changes in Operation 10
2.5 Facility Storm Water 11
3.0 Permit History 11
3.1 Compliance history 11
4.0 Receiving Water 12
4.1 Receiving Stream Water Quality 12
5.0 Permit limitations 13
5.1 Existing Permit Limits 14
5.2 Technology-Based Effluent Limits (TBEL) 17
5.3 Water Quality-Based Effluent Limits 23
5.4 Whole Effluent Toxicity Testing (WETT) 27
5.5 Antibacksliding 28
5.6 Antidegradation 28
5.7 Storm Water 29
5.8 Water Treatment Additives 31
6.0 Permit Draft Discussion 31
6.1 Discharge Limitations 31
6.2 Monitoring Conditions and Rationale 35
6.3 Schedule of Compliance 37
6.4 Special Conditions and Other Permit Requirements 37
6.4.1 Clean Water Act Section 316(b) Cooling Water Intake Structure(s) (CWIS) . 37
6.4.3 Streamlined Mercury Variance (SMV) 41
6.4.4 301(g) Variance Request 41
6.4.5Polychlorinated Biphenyl (PCB) 43
6.5 Spill Response and Reporting Requirement 43
6.6 Permit Processing/Public Comment 43

Attachment A Water Quality Assessment 44

1.0 INTRODUCTION

The Indiana Department of Environmental Management (IDEM) received a National Pollutant Discharge Elimination System (NPDES) Permit application from the permittee on June 3, 2016. The current five year permit was issued with an effective date of December 1, 2011, in accordance with 327 IAC 5-2-6(a). The permit was subsequently modified on November 26, 2014. A modification related to a stream lined Mercury Variance was submitted to IDEM on April 19, 2016 and the draft permit modification was public noticed on June 16, 2016 with the final permit modification issued on August 25, 2016. A five year permit is proposed in accordance with 327 IAC 5-2-6(a).

The Federal Water Pollution Control Act of 1972 and subsequent amendments require a NPDES permit for the discharge of wastewater to surface waters. Furthermore, Indiana Code (IC) 13-15-1-2 requires a permit to control or limit the discharge of any contaminants into state waters or into a publicly owned treatment works. This proposed permit action by IDEM complies with both federal and state requirements.

In accordance with Title 40 of the Code of Federal Regulations (CFR) Sections 124.8 and 124.56, as well as Indiana Administrative Code (IAC) 327 Article 5, development of a Fact Sheet is required for NPDES permits. This document fulfills the requirements established in those regulations.

This Fact Sheet was prepared in order to document the factors considered in the development of NPDES Permit effluent limitations. The technical basis for the Fact Sheet may consist of evaluations of promulgated effluent guidelines, existing effluent quality, receiving water conditions, and wasteload allocations to meet Indiana Water Quality Standards. Decisions to award variances to Water Quality Standards or promulgated effluent guidelines are justified in the Fact Sheet where necessary.

2.0 FACILITY DESCRIPTION

2.1 General

ArcelorMittal – Indiana Harbor West is classified under Standard Industrial Classification (SIC) Code 3312- Steel Mill. The permitted facility is a steel mill that produces molten iron in blast furnaces, crude steel in basic oxygen furnaces, and cast steel slabs. The cast steel slabs are processed into strip steel at other ArcelorMittal steel mills. ArcelorMittal also produces hot-dipped galvanized steel strip.

Source water is Lake Michigan and Indiana Harbor. This facility also provides the water for the ArcelorMittal Central Waste Treatment Facility (IN0063711).

A map showing the location of the facility has been included as Figure 1, below.

Figure 1: Facility Location/Site Map.

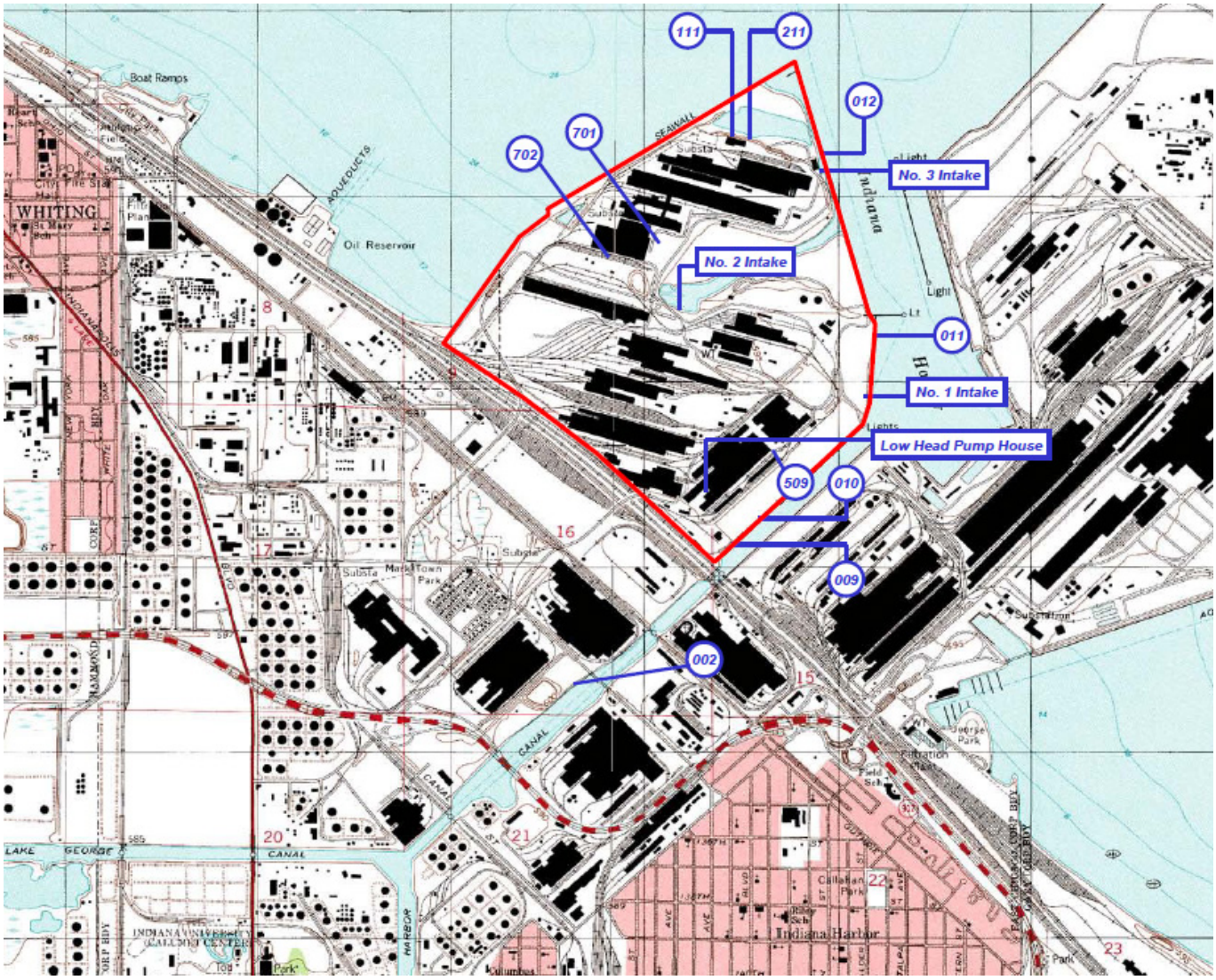

2.2 Outfall Locations

OUTFALL 002	Latitude: 41º 39’ 20” Longitude: -87º 21’ 35”
OUTFALL 009	Latitude: 41º 39’ 40” Longitude: - 87º 27’ 10”
OUTFALL 010	Latitude: 41º 39’ 40” Longitude: - 87º 27’ 05”
OUTFALL 011	Latitude: 41º 40’ 20” Longitude: -87º 26’ 35”
OUTFALL 012	Latitude: 41º 40’ 52” Longitude: - 87º 26’ 45”

2.3 Wastewater Treatment

A general description of sources to each outfall is provided below along with long term average flows and maximum monthly flows from January 2013 to December 2015. Water diagrams\system schematics are provided. A flow diagram of the current configuration at the facility is included as Figure 2.

Figure 2: Current Conditions Flow Diagram

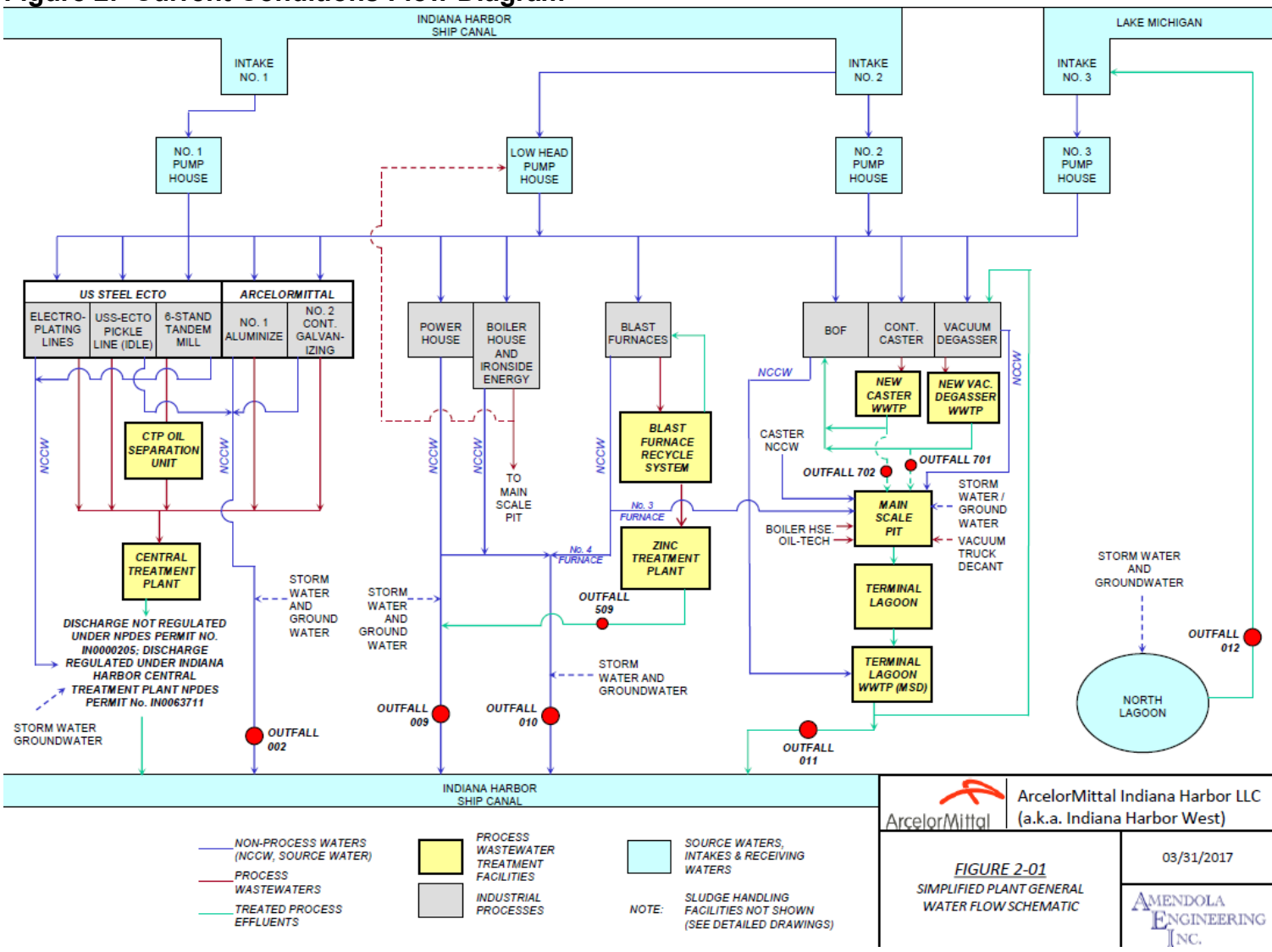

Outfall 002

The discharge from Outfall 002 comprises non-contact cooling water from the USS/ECTO Pickle Line (currently idled) and ArcelorMittal No. 1 Aluminize and No. 2 Galvanizing Lines, storm water and groundwater. Outfall 002 discharges to the Indiana Harbor Ship Canal. The non-contact cooling water is chlorinated for Zebra and Quagga mussel control, then dechlorinated prior to discharge. Long term average flow is 12.2 MGD. A flow diagram of Outfall 002 is included as Figure 3.

Figure 3: Outfall 002 Flow Diagram

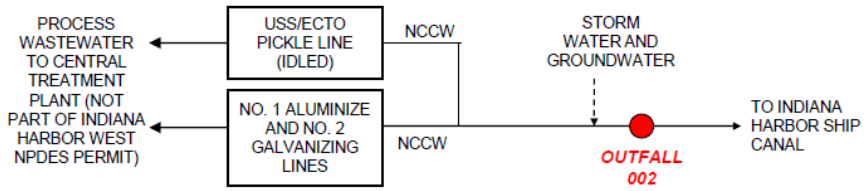

ArcelorMittal Indiana Harbor LLC (a.k.a. Indiana Harbor West)

FIGURE 2-07
No. 1 AND 2 GALVANIZING LINES AND U. S. STEEL/ECTO PICKLE LINE PROCESS AND COOLING WATER SYSTEM FLOW SCHEMATIC

03/31/2017

AMENDOLA ENGINEERING INC.

------► INTERMITTENT FLOW
– – – –► SLUDGE FLOW

Outfall 009

The discharge from Outfall 009 comprises treated blowdown from the Blast Furnace Recycle System (Internal Outfall 509), non-contact cooling water from the Powerhouse area, storm water and groundwater. Outfall 009 discharges to the Indiana Harbor Ship Canal. The non-contact cooling water is chlorinated for Zebra and Quagga mussel control, then dechlorinated prior to discharge. Long term average flow is 31.8 MGD. A flow diagram of Outfall 009 is included as Figure 4.

Figure 4: Outfall 009 Flow Diagram

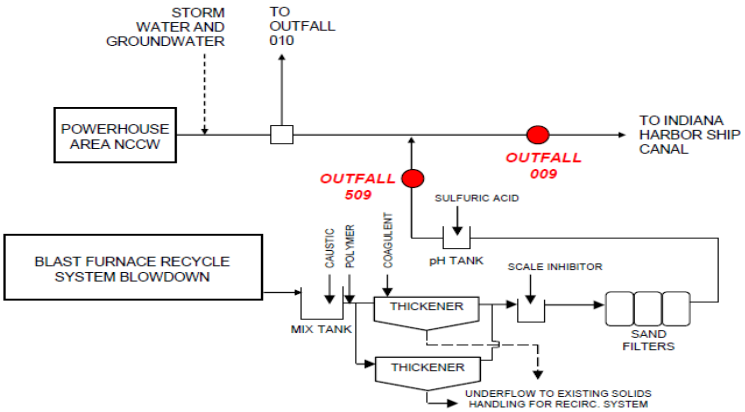

ArcelorMittal Indiana Harbor LLC (a.k.a. Indiana Harbor West)

FIGURE 2-06
BLAST FURNACE RECYCLE SYSTEM ZINC TREATMENT PLANT FLOW SCHEMATIC

03/31/2017

AMENDOLA ENGINEERING INC.

------► INTERMITTENT FLOW
– – – –► SLUDGE FLOW

Internal Outfall 509

The discharge from Outfall 009 comprises treated wastewater from the Blast Furnace Recycle System Blowdown WWTP. ArcelorMittal will be terminating basic oxygen furnace steelmaking and continuous casting operations at the No. 2 Steel Producing Department at Indiana Harbor East. That production will be picked up at the No. 3 Steel Producing Department at this facility and the No. 4 Steel Producing Department at Indiana Harbor East. Consequently, ironmaking and steelmaking production for this outfall has been increased.

Outfall 509 discharges to the Indiana Harbor Ship Canal though Outfall 009. A flow diagram of Outfall 509 is included above as Figure 4.

Outfall 010

The discharge from Outfall 010 comprises non-contact cooling water from the sinter plant, No. 4 Blast Furnace, Boilerhouse and Ironside Energy, emergency overflows of non-contact cooling water from the Powerhouse area, storm water and groundwater. Outfall 010 discharges to the Indiana Harbor Ship Canal. The non-contact cooling water is chlorinated for Zebra and Quagga mussel control, then dechlorinated prior to discharge. Long term average flow is 38.1 MGD. A flow diagram of Outfall 010 is included as Figure 5.

Figure 5: Outfall 010 Flow Diagram

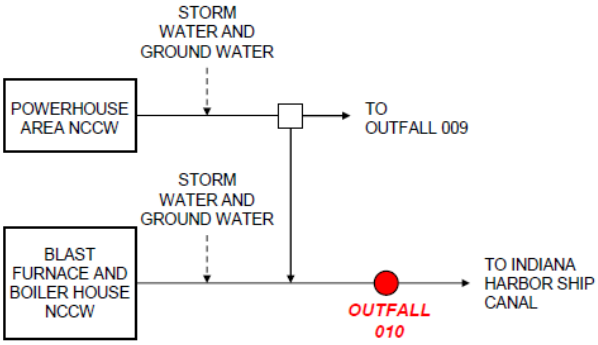

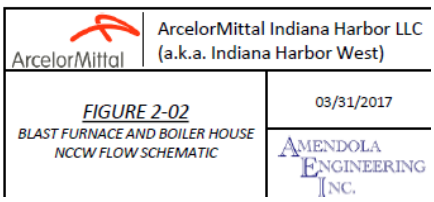

------→ *INTERMITTENT FLOW*
– – – –→ *SLUDGE FLOW*

Outfall 011

The discharge from Outfall 011 comprises treated wastewater from the Main Scale Pit and Terminal Lagoon Wastewater Treatment System. The discharge comprises excess flow not

used as makeup water to the Vacuum Degasser and Continuous Caster recycle system. The non-contact cooling water is chlorinated for zebra and quagga mussel control, then dechlorinated prior to discharge. Outfall 011 discharges to the Indiana Harbor Ship Canal. Process wastewaters from the following operations are discharged to the Main Scale Pit and Terminal Lagoon Wastewater Treatment System:

- Vacuum Degasser WWTP (Outfall 701; intermittent discharge)
- Continuous Caster WWTP (Outfall 702; intermittent discharge)
- No. 3 Blast Furnace, BOF, Continuous Caster and Vacuum Degasser non-contact cooling water.
- Boilerhouse Wastewater
- Oil Tech Wastewater
- Vacuum Truck Decant Water (intermittent)
- Storm water and groundwater

Long term average flow is 22.1 MGD for this outfall. A flow diagram of Outfall 011 is included as Figure 6.

Figure 6: Outfall 011 Flow Diagram

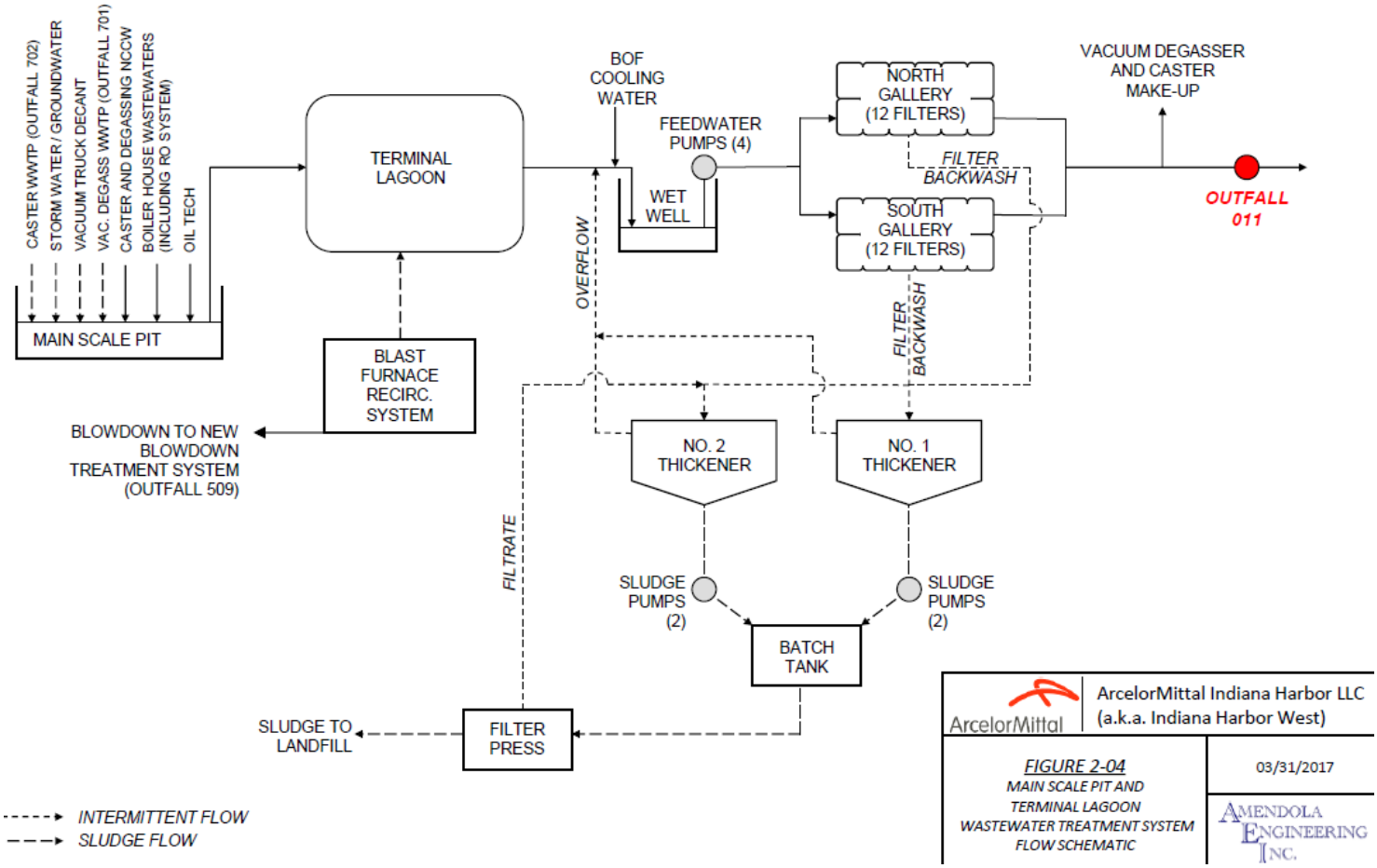

Internal Outfall 701

The discharge from Outfall 701 comprises treated wastewater from the Vacuum Degasser wastewater treatment system. The discharge is intermittent and comprises excess flow not evaporated in the BOF gas cleaning system. ArcelorMittal will be terminating basic oxygen furnace steelmaking and continuous casting operations at the No. 2 Steel Producing Department at Indiana Harbor East. That production will be picked up at the No. 3 Steel Producing Department at this facility and the No. 4 Steel Producing Department at Indiana Harbor East. Consequently, ironmaking and steelmaking production for this outfall has been increased.

Outfall 701 discharged a total of 12 days from January 2013 to December 2015. Outfall 701 discharges to the Indiana Harbor Ship Canal through Outfall 011.

Internal Outfall 702

The discharge from Outfall 702 comprises treated wastewater from the Continuous Caster wastewater treatment system. The discharge is intermittent and comprises excess flow not evaporated in the BOF gas cleaning system. Outfall 702 discharged a total of 3 days from January 2013 to December 2015.

ArcelorMittal will be terminating basic oxygen furnace steelmaking and continuous casting operations at the No. 2 Steel Producing Department at Indiana Harbor East. That production will be picked up at the No. 3 Steel Producing Department at this facility and the No. 4 Steel Producing Department at Indiana Harbor East. Consequently, ironmaking and steelmaking production for this outfall has been increased. A flow diagram of Internal Outfalls 701 and 702 is included as Figure 7.

Figure 7: Internal Outfalls 701 and 702 Flow Diagram

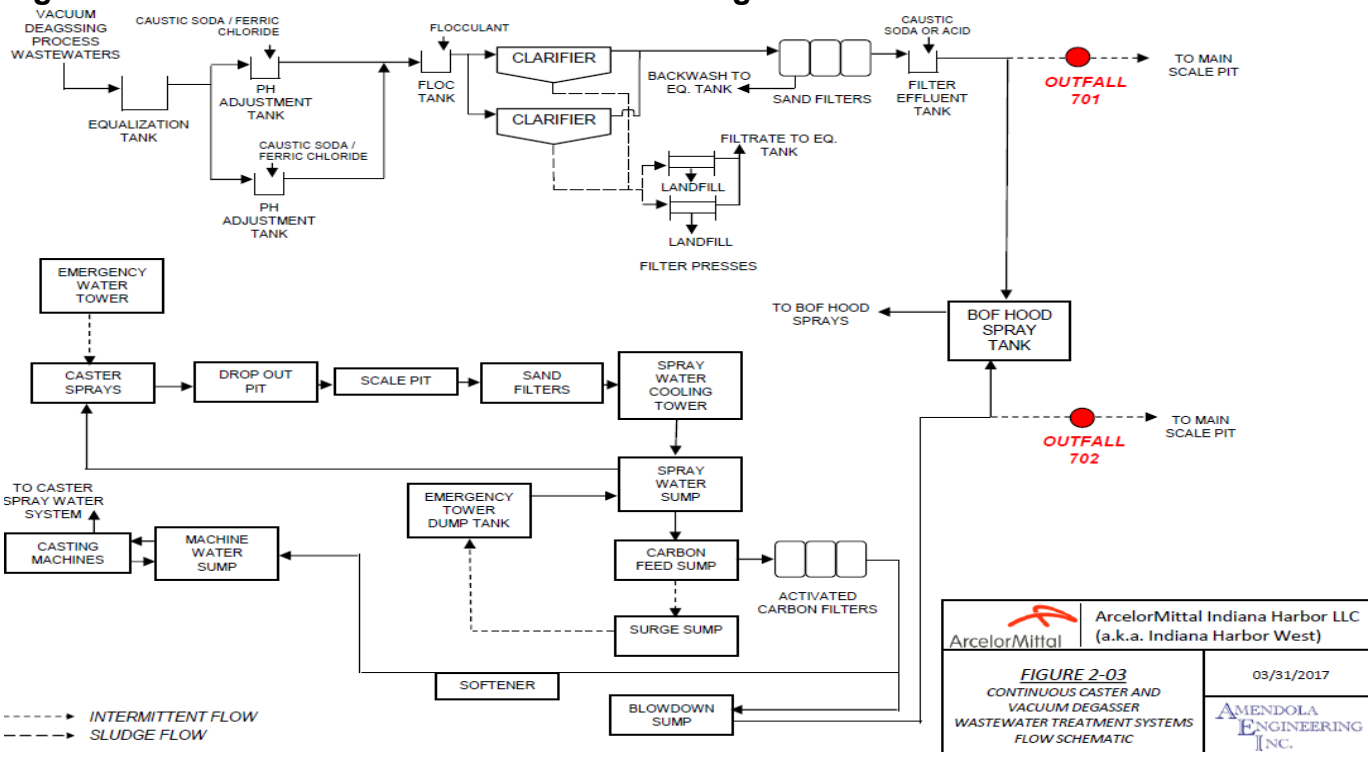

Outfall 012
The discharge from Outfall 012 was previously comprised of effluent from the Hot Strip Mill Filter Plant (internal Outfall 111), effluent from the Oily Waste Treatment Plant (internal Outfall 211), non-contact cooling water, storm water and groundwater. However, the facility has shut down the operations at the Hot Strip Mill and No. 3 Cold Mill and Pickler. The outfall structure has been plugged. The facility has requested that Outfall 012 be maintained as an emergency groundwater and stormwater outfall should the need arise for a discharge.

Figure 8: Outfall 012 Flow Diagram

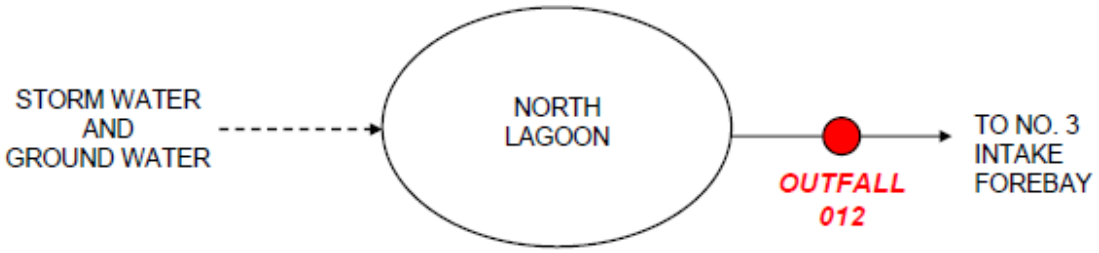

Internal Outfall 111 (process idled in March 2016)
The discharge from Outfall 111 was comprised of treated effluent from the Hot Strip Mill Filter Plant. As mentioned above, the Hot Strip Mill has been idled and the facility has requested that this Internal Outfall be removed from the permit.

Internal Outfall 211 (process idled in December 2015)
Internal Outfall 211 was the discharge monitoring location for the Oily Wastewater Treatment Plant (OWTP), which served the No. 3 Cold Mill Complex. The No. 3 Cold Mill Complex has been shutdown and the facility has requested that this Internal Outfall be removed from the permit.

The permittee shall have the wastewater treatment facilities under the responsible charge of an operator certified by the Commissioner in a classification corresponding to the classification of the wastewater treatment plant as required by IC 13-18-11-11 and 327 IAC 5-22-5. In order to operate a wastewater treatment plant the operator shall have qualifications as established in 327 IAC 5-22-7. IDEM has given the permittee a Class D industrial wastewater treatment plant classification.

2.4 Changes in Operation

The Sinter plant at Indiana Harbor West has been shut down since 2010, the No. 3 CSM and Pickling operation were temporarily idled in May 2014, and the 84" Hot Strip Mill was temporarily idled in March 2016. Therefore, they have requested that these operations and associated Internal Outfalls 111, 211, and 411 be removed from the permit and production based standards be recalculated at 509 without provisions for the sinter plant.

ArcelorMittal will be terminating basic oxygen furnace steelmaking and continuous casting operations at the No. 2 Steel Producing Department at Indiana Harbor East. That production will be picked up at the No. 3 Steel Producing Department at this facility and the No. 4 Steel Producing Department at Indiana Harbor East. Consequently, ironmaking and steelmaking production for Internal Outfalls 509, 701, and 702 has been increased.

In addition, due to the above mentioned changes, the facility has requested a reallocation of the 301(g) variance limits for ammonia. The reallocation of variance limits is not included in this permit and may be addressed in a future modification of the permit.

2.5 Facility Storm Water

Site storm water is discharged at each outfall without treatment. Storm water monitoring requirements can be found in Section 5.7 of this Fact Sheet.

3.0 PERMIT HISTORY

3.1 Compliance history

A review of this facility's discharge monitoring data was conducted for compliance verification. This review indicates the following permit limitation violations between October 2013 and November 2016. There are no pending or current enforcement actions regarding this NPDES permit.

<u>Outfall 002</u>
No effluent violations

<u>Outfall 009</u>
Ammonia [2/15; 5/16]; Mercury [6/16]

<u>Outfall 010</u>
Mercury [6/16]

<u>Internal Outfall 509</u>
Total Cyanide [11/15]

<u>Outfall 011</u>
No effluent violations

<u>Internal Outfall 701</u>
Zinc [9/16]

<u>Internal Outfall 702</u>
No effluent violations

<u>Outfall 012</u>
No effluent violations

Internal Outfall 111
No effluent violations

Internal Outfall 211
Naphthalene [4/14]

Internal Outfall 411
Oil and Grease [2/14; 3/14; 6/14; 7/14; 8/14; 9/14; 10/14; 11/14; 12/14; 1/15; 5/15; 6/15; 8/15; 12/15; 3/16]; TSS [7/14; 10/14; 1/15; 6/15]

4.0 RECEIVING WATER

The Indiana Harbor Ship Canal originates at the confluence of the East and West Branches of the Grand Calumet River. It runs north for two miles where it is joined by the Lake George Canal. The Indiana Harbor Ship Canal then runs two miles northeast to the Indiana Harbor. The Indiana Harbor runs one mile to the north before emptying into the open waters of Lake Michigan. The receiving streams for this facility are the Indiana Harbor Ship Canal downstream of the Lake George Canal, the Indiana Harbor, and Lake Michigan. The $Q_{7,10}$ low flow value of the Indiana Harbor Ship Canal is 358 cfs and shall be capable of supporting a well balanced, warm water aquatic community and full body contact recreation in accordance with 327 IAC 2-1.5-5.

The permittee discharges to a waterbody that has been identified as a high quality water of the state within the Great Lakes system. The Indiana Harbor Ship Canal is a tributary to the Indiana portion of the open waters of Lake Michigan. The Indiana portion of the open waters of Lake Michigan is designated in 327 IAC 2-1.5-19(b)(2) as an Outstanding State Resource Water (OSRW).

In addition to antidegradation implementation procedures under 327 IAC 2-1.3, the Indiana Harbor Ship Canal is subject to other NPDES requirements specific to Great Lakes system dischargers under 327 IAC 2-1.5 and 327 IAC 5-2-11.2 through 327 IAC 5-2-11.6. These rules address water quality standards applicable to dischargers within the Great Lakes system and reasonable potential to exceed water quality standards procedures.

As required by 327 IAC 5-2-11.3(b)(2), language in this renewed permit specifically prohibits the permittee from undertaking deliberate actions that would result in new or increased discharges of BCC's or new or increased permit limits for non-BCC's, or from allowing a new or increased discharge of a BCC from an existing or proposed industrial user, without first proving that the new or increased discharge would not result in a significant lowering of water quality, or by submission and approval of an antidegradation demonstration to the IDEM.

4.1 Receiving Stream Water Quality

Section 303(d) of the Clean Water Act requires states to identify waters, through their Section 305(b) water quality assessments, that do not or are not expected to meet applicable water quality standards with federal technology based standards alone. States are also required to develop a priority ranking for these waters taking into account the severity of the pollution and

the designated uses of the waters. Once this listing and ranking of impaired waters is completed, the states are required to develop Total Maximum Daily Loads (TMDLs) for these waters in order to achieve compliance with the water quality standards. Indiana's 2014 303(d) List of Impaired Waters was developed in accordance with Indiana's Water Quality Assessment and 303(d) Listing Methodology for Waterbody Impairments and Total Maximum Daily Load Development for the 2014 Cycle.

The Indiana Harbor Ship Canal (Assessment-Unit INH040400010603), HUC (040400010603)) is on the 2014 303(d) list for E. coli, Impaired Biotic Communities, Oil and Grease, and PCBs in Fish. A TMDL for the Indiana Harbor Ship Canal isn't currently planned. The Indiana Harbor is on the 3014 303(d) list for Free Cyanide, Mercury in Fish Tissue and PCBs in Fish Tissue.

5.0 PERMIT LIMITATIONS

Two categories of effluent limitations exist for NPDES permits: Technology-Based Effluent Limits (TBELs) and; Water Quality-Based Effluent Limits (WQBELs).

TBELs are developed by applying the National Effluent Limitation Guidelines (ELGs) established by USEPA for specific industrial categories. TBELs are the primary mechanism of control and enforcement of water pollution under the Clean Water Act (CWA). Technology based treatment requirements under section 301(b) of the CWA represent the minimum level of control/treatment using available technology that must be imposed in a section 402 permit (40 CFR 125.3(a)).

In the absence of ELGs, effluent limits can also be based upon Best Professional Judgment (BPJ). Accordingly, every individual member of a discharge class or category is required to operate their water pollution control technologies according to industry-wide standards and accepted engineering practices. This means that TBELs based upon a BPJ determination are applied at end-of-pipe and mixing zones are not allowed (40 CFR 125.3(a)). Similarly, since the statutory deadlines best practicable technology (BPT), best available technology economically achievable (BAT) and best conventional control technology (BCT) have all passed; compliance schedules for these TBELs are also not allowed.

WQBELs are designed to be protective of the beneficial uses of the receiving water and are independent of the available treatment technology. The WQBELs for this facility are based on water quality criteria in 327 IAC 2-1.5-8 or under the procedures described in 327 IAC 2-1.5-11 through 327 IAC 2-1.5-16 and implementation procedures in 327 IAC 5. Limitations and/or monitoring are required for parameters identified by applications of the reasonable potential to exceed WQBEL under 327 IAC 5-2-11.5.

According to 40 CFR 122.44 and 327 IAC 5, NPDES permit limits are based on either TBELs, where applicable, BPJ, or WQBELs, whichever is most stringent. The decision to limit or monitor the parameters contained in this permit is based on information contained in the permittee's NPDES application. In addition, when performing a permit renewal, existing permit limits must be considered. These may be TBELs, WQBELs, or limits based on BPJ. When renewing a permit, the antibacksliding provisions identified in 327 IAC 5-2-10(11) are taken into consideration.

5.1 Existing Permit Limits

DISCHARGE LIMITATIONS- Outfall 002

Table 1

	Quantity or Loading			Quality or Concentration			Monitoring	Requirements
Parameter	Monthly Average	Daily Maximum	Units	Monthly Average	Daily Maximum	Units	Measurement Frequency	Sample Type
Flow	Report	Report	MGD	-------	-------	-----	1 X Weekly	24 Hour Total
TSS	Report	Report	lbs/day	Report	Report	mg/l	1 X Weekly	24-Hr. Comp.
O+G	Report	Report	lbs/day	Report	Report	mg/l	1 X Weekly	Grab
TRC	1.5	3.5	lbs/day	0.016	0.037	mg/l	5 X Weekly	Grab
Mercury	0.00012	0.00030	lbs/day	1.3	3.2	ng/l	6 X Yearly	Grab
Temperature								
Intake	-------	--------	------	Report	Report	ºF	2 X Weekly	Grab
Outfall	-------	--------	------	Report	Report	ºF	2 X Weekly	Grab

Table 2

	Quality or Concentration			Monitoring	Requirements
Parameter	Daily Minimum	Daily Maximum	Units	Measurement Frequency	Sample Type
pH	6.0	9.0	s.u.	1 X Weekly	Grab

DISCHARGE LIMITATIONS- Outfall 009

Table 1

	Quantity or Loading			Quality or Concentration			Monitoring	Requirements
Parameter	Monthly Average	Daily Maximum	Units	Monthly Average	Daily Maximum	Units	Measurement Frequency	Sample Type
Flow	Report	Report	MGD	-------	-------	-----	1 X Weekly	24 Hour Total
TSS	Report	Report	lbs/day	Report	Report	mg/l	1 X Weekly	24-Hr. Comp.
O+G	Report	Report	lbs/day	Report	Report	mg/l	1 X Weekly	Grab
TRC	5.5	13	lbs/day	0.012	0.028	mg/l	5 X Weekly	Grab
Ammonia, as N	425	1000	lbs/day	Report	Report	mg/l	1 X Weekly	24-Hr. Comp.
Phenols (4AAP)	Report	11	lbs/day	Report	Report	mg/l	1 X Weekly	Grab
Zinc[8]	Report	Report	lbs/day	Report	Report	ug/l	1 X Weekly	24-Hr. Comp.
Lead[8]	Report	Report	lbs/day	Report	Report	ug/l	1 X Weekly	24-Hr. Comp.
Mercury								
Final	0.00060	0.0015	lbs/day	1.3	3.2	ng/l	6 X Yearly	Grab
Temperature								
Intake	-------	--------	------	Report	Report	ºF	2 X Weekly	Grab
Outfall	-------	--------	------	Report	Report	ºF	2 X Weekly	Grab
Whole Effluent Toxicity Testing								

Table 2

	Quality or Concentration			Monitoring	Requirements
Parameter	Daily Minimum	Daily Maximum	Units	Measurement Frequency	Sample Type
pH	6.0	9.0	s.u.	1 X Weekly	Grab

DISCHARGE LIMITATIONS - Internal Outfall 509

Table 1

Parameter	Quantity or Loading Monthly Average	Daily Maximum	Units	Quality or Concentration Monthly Average	Daily Maximum	Units	Monitoring Requirements Measurement Frequency	Sample Type
Flow	Report	Report	MGD	-------	-------	-----	2 X Weekly	24 Hour Total
TSS	736	2,213	lbs/day	Report	Report	mg/l	2 X Weekly	24-Hr. Comp.
O+G	38.1	114	lbs/day	Report	Report	mg/l	2 X Weekly	Grab
T. Cyanide	29.8	59.6	lbs/day	Report	Report	mg/l	2 X Weekly	Grab
Ammonia, as N	Report	Report	lbs/day	Report	Report	mg/l	1 X Weekly	24-Hr. Comp.
Phenols (4AAP)	Report	Report	lbs/day	Report	Report	mg/l	1 X Weekly	Grab
Zinc[2]	4.46	13.4	lbs/day	Report	Report	ug/l	2 X Weekly	24-Hr. Comp.
Lead[2]	2.98	8.95	lbs/day	Report	Report	ug/l	2 X Weekly	24-Hr. Comp.
2,3,7,8-TCDF	-------	---------	------	-------	<ML[&]	pg/l	1 X Monthly	24-Hr. Comp.

& ML means less than 10 pg/l

DISCHARGE LIMITATIONS- Outfall 010

Table 1

Parameter	Quantity or Loading Monthly Average	Daily Maximum	Units	Quality or Concentration Monthly Average	Daily Maximum	Units	Monitoring Requirements Measurement Frequency	Sample Type
Flow	Report	Report	MGD	-------	-------	-----	1 X Weekly	24 Hour Total
TSS	Report	Report	lbs/day	Report	Report	mg/l	1 X Weekly	24-Hr. Comp.
O+G	Report	Report	lbs/day	Report	Report	mg/l	1 X Weekly	Grab
TRC	3.7	8.6	lbs/day	0.012	0.028	mg/l	5 X Weekly	Grab
Ammonia, as N	100	300	lbs/day	Report	Report	mg/l	1 X Weekly	24-Hr. Comp.
Phenols (4AAP)	Report	5	lbs/day	Report	Report	mg/l	1 X Weekly	Grab
Zinc	Report	Report	lbs/day	Report	Report	ug/l	1 X Weekly	24-Hr. Comp.
Lead	Report	Report	lbs/day	Report	Report	ug/l	1 X Weekly	24-Hr. Comp.
Mercury								
Final	0.00040	0.00098	lbs/day	1.3	3.2	ng/l	6 X Yearly	Grab
Temperature								
Intake	-------	--------	------	Report	Report	ºF	2 X Weekly	Grab
Outfall	-------	--------	------	Report	Report	ºF	2 X Weekly	Grab

Table 2

Parameter	Quality or Concentration Daily Minimum	Daily Maximum	Units	Monitoring Requirements Measurement Frequency	Sample Type
pH	6.0	9.0	s.u.	1 X Weekly	Grab

DISCHARGE LIMITATIONS- Outfall 011

Table 1

Parameter	Quantity or Loading Monthly Average	Daily Maximum	Units	Quality or Concentration Monthly Average	Daily Maximum	Units	Monitoring Requirements Measurement Frequency	Sample Type
Flow	Report	Report	MGD	-------	-------	-----	1 X Weekly	24 Hour Total
TSS	Report	Report	lbs/day	Report	Report	mg/l	1 X Weekly	24-Hr. Comp.
O+G	Report	Report	lbs/day	Report	Report	mg/l	1 X Weekly	Grab
TRC	2.5	5.9	lbs/day	0.013	0.030	mg/l	5 X Weekly	Grab
Ammonia, as N	75	150	lbs/day	Report	Report	mg/l	1 X Weekly	24-Hr. Comp.
Phenols (4AAP)	Report	5	lbs/day	Report	Report	mg/l	1 X Weekly	Grab

Zinc	Report	Report	lbs/day	Report	Report	ug/l	1 X Monthly	24-Hr. Comp.
Lead	Report	Report	lbs/day	Report	Report	ug/l	1 X Weekly	24-Hr. Comp.
Mercury								
Final	0.00025	0.00062	lbs/day	1.3	3.2	ng/l	6 X Yearly	Grab
Temperature								
Intake	-------	--------	------	Report	Report	ºF	2 X Weekly	Grab
Outfall	-------	--------	------	Report	Report	ºF	2 X Weekly	Grab
Whole Effluent Toxicity Testing								

Table 2

	Quality or Concentration			Monitoring	Requirements
Parameter	Daily Minimum	Daily Maximum	Units	Measurement Frequency	Sample Type
pH	6.0	9.0	s.u.	1 X Weekly	Grab

DISCHARGE LIMITATIONS- Outfall 701

Table 1

	Quantity or Loading			Quality or Concentration			Monitoring	Requirements
Parameter	Monthly Average	Daily Maximum	Units	Monthly Average	Daily Maximum	Units	Measurement Frequency	Sample Type
Flow	Report	Report	MGD	-------	-------	-----	2 X Weekly	24 Hour Total
TSS	21.2	59.4	lbs/day	Report	Report	mg/l	2 X Weekly	24-Hr. Comp.
Zinc	0.382	1.15	lbs/day	Report	Report	ug/l	2 X Weekly	24-Hr. Comp.
Lead	0.255	0.764	lbs/day	Report	Report	ug/l	2 X Weekly	24-Hr. Comp.

DISCHARGE LIMITATIONS- Outfall 702

Table 1

	Quantity or Loading			Quality or Concentration			Monitoring	Requirements
Parameter	Monthly Average	Daily Maximum	Units	Monthly Average	Daily Maximum	Units	Measurement Frequency	Sample Type
Flow	Report	Report	MGD	-------	-------	-----	2 X Weekly	24 Hour Total
TSS	60.3	169	lbs/day	Report	Report	mg/l	2 X Weekly	24-Hr. Comp.
O+G	24.0	72.4	lbs/day	Report	Report	mg/l	2 X Weekly	Grab
Zinc	1.08	3.26	lbs/day	Report	Report	ug/l	2 X Weekly	24-Hr. Comp.
Lead	0.724	2.17	lbs/day	Report	Report	ug/l	2 X Weekly	24-Hr. Comp.

DISCHARGE LIMITATIONS- Outfall 012

Table 1

	Quantity or Loading			Quality or Concentration			Monitoring	Requirements
Parameter	Monthly Average	Daily Maximum	Units	Monthly Average	Daily Maximum	Units	Measurement Frequency	Sample Type
Flow	Report	Report	MGD	-------	-------	-----	1 X Weekly	24 Hour Total
TSS	Report	Report	lbs/day	Report	Report	mg/l	1 X Weekly	24-Hr. Comp.
O+G	Report	Report	lbs/day	Report	Report	mg/l	1 X Weekly	Grab
Zinc	Report	Report	lbs/day	Report	Report	ug/l	1 X Month	24-Hr. Comp.
Lead	Report	Report	lbs/day	Report	Report	ug/l	1 X Month	24-Hr. Comp.
Mercury	Report	Report	lbs/day	Report	Report	ng/l	6 X Yearly	Grab
TRC	1.4	2.8	lbs/day	0.020	0.040	mg/l	5 X Weekly	Grab
Whole Effluent Toxicity								

Table 2

Parameter	Quality or Concentration Daily Minimum	Daily Maximum	Units	Monitoring Requirements Measurement Frequency	Sample Type
pH	6.0	9.0	s.u.	1 X Weekly	Grab

DISCHARGE LIMITATIONS- Outfall 111

Table 1

Parameter	Quantity or Loading Monthly Average	Daily Maximum	Units	Quality or Concentration Monthly Average	Daily Maximum	Units	Monitoring Requirements Measurement Frequency	Sample Type
Flow	Report	Report	MGD	-------	-------	-----	2 X Weekly	24 Hour Total
TSS	Report	Report	lbs/day	-------	Report	mg/l	2 X Weekly	24-Hr. Comp.
O+G	Report	Report	lbs/day	--------	Report	mg/l	2 X Weekly	Grab

DISCHARGE LIMITATIONS- Outfall 211

Table 1

Parameter	Quantity or Loading Monthly Average	Daily Maximum	Units	Quality or Concentration Monthly Average	Daily Maximum	Units	Monitoring Requirements Measurement Frequency	Sample Type
Flow	Report	Report	MGD	-------	-------	-----	2 X Weekly	24 Hour Total
TSS	Report	Report	lbs/day	Report	Report	mg/l	2 X Weekly	24-Hr. Comp.
O+G	Report	Report	lbs/day	Report	Report	mg/l	2 X Weekly	Grab
Zinc	3.22	9.65	lbs/day	Report	Report	mg/l	2 X Weekly	Grab
Lead	3.25	9.3	lbs/day	Report	Report	mg/l	2 X Weekly	Grab
Naphthalene	-------	1.1	lbs/day	--------	Report	mg/l	[&]	Grab
Tetrachloroethylene	----	1.68	lbs/day	--------	Report	mg/l	[&]	Grab

& Monitoring waiver was granted

DISCHARGE LIMITATIONS Outfall 411 (combination of 111 and 211)

Table 1

Parameter	Quantity or Loading Monthly Average	Daily Maximum	Units	Quality or Concentration Monthly Average	Daily Maximum	Units	Monitoring Requirements Measurement Frequency	Sample Type
Flow	Report	Report	MGD	-------	-------	-----	2 X Weekly	24 Hour Total
TSS	4381	11365	lbs/day	Report	Report	mg/l	2 X Weekly	24-Hr. Comp.
O+G	1048	3089	lbs/day	Report	Report	mg/l	2 X Weekly	Grab

5.2 Technology-Based Effluent Limits (TBEL)

The applicable technology based standards for the wastestreams contributing to the discharges from AM West are contained in 40 CFR 420 – Iron and Steel Manufacturing Point Source Category. Technology-Based Effluent limits apply at end-of-process and apply at internal monitoring points. The following table identifies the applicable standards.

Applicable ELG Subparts

Subpart	Description
40 CFR 420.30 Subpart C – Ironmaking Subcategory	Discharges from ironmaking operations in which iron ore is molten in a blast furnace
40 CFR 420.50 Subpart E – Vacuum Degassing Subcategory	Discharges from vacuum degassing operations conducted by applying a vacuum to molten steel
40 CFR 420.60 Subpart F – Continuous Casting Subcategory	Discharges from the continuous casting of molten steel into intermediate or semi-finished steel products through water cooled molds

The following is the basis for including TBELs at the respective outfalls:

Outfall 002:
Outfall 002 contains storm water, ground water from basement sumps, and non-contact cooling wastewater from the pickling and hot-dip galvanizing lines. No applicable categorical limits apply.

Outfall 009:
Outfall 009 contains Blast Furnace Recycle System (Internal Outfall 509), non-contact cooling water from the Powerhouse area, storm water and groundwater. Categorical limits will apply at Internal Outfall 509.

Internal Outfall 509:
Internal Outfall 509 consists of the effluent from a wastewater treatment plant for the blast furnace wastewaters (40 CFR 420.30) prior to discharging via Outfall 009.

As noted above, the Sinter Plant has been idled. Therefore, the following TBELs have been calculated without the Sinter Plant in operation. The TBELs for Internal Outfall 509 are established by calculating the applicable pollutant loads for each parameter contained in 40 CFR Part 420.30.

Total Suspended Solids					
40 CFR	**Production**	**Monthly Average**		**Daily Maximum**	
		Categorical Limitation	**Subtotal (lbs/day)**	**Categorical Limitation**	**Subtotal (lbs/day)**
420.32(a) (BPT)	10,500 Tons/Day	0.0260 lbs/1000lbs	546	0.0782 lbs/1000lbs	1,642
420.33(a) (BAT)		-------	---------	--------	--------
TSS Limitation		546 lbs/day		1,642 lbs/day	

[1] Below is an example TSS calculation for Ironmaking Subcategory:

$$\text{TSS Average Monthly Limit} = 10{,}500\frac{tons}{day} \times 2000\frac{lb}{ton} \times 0.0260\frac{lb}{1000lb} = 546\frac{lb}{day}$$

Lead					
40 CFR	Production	Monthly Average		Daily Maximum	
		Categorical Limitation	Subtotal (lbs/day)	Categorical Limitation	Subtotal (lbs/day)
420.32(a) (BPT)	10,500 Tons/Day	----------	---------	---------	--------
420.33(a) (BAT)		0.0000876 lbs/1000lbs	1.84	0.000263 lbs/1000lbs	5.52
Total Lead Limitation		1.84 lbs/day		5.52 lbs/day	

Zinc					
40 CFR	Production	Monthly Average		Daily Maximum	
		Categorical Limitation	Subtotal (lbs/day)	Categorical Limitation	Subtotal (lbs/day)
420.32(a) (BPT)	10,500 Tons/Day	----------	---------	---------	--------
420.33(a) (BAT)		0.000131 lbs/1000lbs	2.75	0.000394 lbs/1000lbs	8.27
Total Zinc Limitation		2.75 lbs/day		8.27 lbs/day	

Total Cyanide					
40 CFR	Production	Monthly Average		Daily Maximum	
		Categorical Limitation	Subtotal (lbs/day)	Categorical Limitation	Subtotal (lbs/day)
420.32(a) (BPT)	10,500 Tons/Day	0.00782 lbs/1000lbs	164	0.0234 lbs/1000lbs	491
420.33(a) (BAT)		0.000876 lbs/1000lbs	18.4	0.00175 lbs/1000lbs	36.8
Total Cyanide Limitation		18.4 lbs/day		36.8 lbs/day	

Ammonia, as N					
40 CFR	Production	Monthly Average		Daily Maximum	
		Categorical Limitation	Subtotal (lbs/day)	Categorical Limitation	Subtotal (lbs/day)
420.32(a) (BPT)	10,500 Tons/Day	0.0537 lbs/1000lbs	1,128	0.161 lbs/1000lbs	3,381
420.33(a) (BAT)		0.00292 lbs/1000lbs	61.3	0.00876 lbs/1000lbs	184
Total Ammonia, as N Limitation		61.3 lbs/day		184 lbs/day	

Total Residual Chlorine					
40 CFR	**Production**	**Monthly Average**		**Daily Maximum**	
		Categorical Limitation	**Subtotal (lbs/day)**	**Categorical Limitation**	**Subtotal (lbs/day)**
420.32(a) (BPT)	10,500 Tons/Day	FACILITY DOES NOT CHLORINATE IRONMAKING WASTEWATER. THEREFORE, TRC LIMITATIONS ARE NOT APPLICABLE FROM THIS CATEGORY			
420.33(a) (BAT)					
Total Residual Chlorine Limitation		NOT APPLICABLE		NOT APPLICABLE	

Phenols (4AAP)					
40 CFR	**Production**	**Monthly Average**		**Daily Maximum**	
		Categorical Limitation	**Subtotal (lbs/day)**	**Categorical Limitation**	**Subtotal (lbs/day)**
420.32(a) (BPT)	10,500 Tons/Day	0.00210 lbs/1000lbs	44.1	0.00626 lbs/1000lbs	132
420.33(a) (BAT)		0.0000292 lbs/1000lbs	0.613	0.0000584 lbs/1000lbs	1.23
Total Phenols (4AAP) Limitation		0.613 lbs/day		1.23 lbs/day	

The categorical limitations included at Internal Outfall 509 are:

- TSS, Lead, Zinc, and Total Cyanide
  The above mentioned parameters have TBELs that are more stringent than the Water Quality-Based Effluent Limitations (WQBELs). Therefore, the TBELs for monthly average and daily maximums, identified in the tables above, are included at Internal Outfall 509.

- Ammonia-N and Phenols
  Section 301(g) of the Clean Water Act provides variances to BAT limitations. The facility has a previously approved 301(g) variance for ammonia and phenols. That variance approved net limitations for ammonia and phenols for Outfalls 009, 010, and 011. The facility has submitted a request for a continuance of the 301(g) variance for ammonia and phenols (4AAP) with a request to reallocate the mass distribution to account for the current production scenario. IDEM has reviewed the submittal from ArcelorMittal and, as a result of that review, determined that the net limit requirements for the three outfalls will not be reallocated at this time. The permittee may request a modification at a later date to incorporate changes to the 301(g) variance.

Outfall 010:
Outfall 010 consists of storm water, ground water from basement sumps, and non-contact cooling wastewater from the blast furnace, powerhouse and boiler house. Outfall 010 also collects overflow from Outfall 009 and from the blast furnace recirculation system in the event of an emergency. Categorical limits will apply at Internal Outfall 509.

Outfall 011:
Outfall 011 consists of treated vacuum degassing (40 CFR 420.50), and continuous casting (40 CFR 420.60) process wastewaters. Categorical limits will apply at Internal Outfall 701 and Internal Outfall 702.

Internal Outfall 701:
Internal Outfall 701 consists of the vacuum degasser process wastewater (40 CFR 420.50). As indicated in the previous permit, New Source Performance Standards (NSPS) are included for the vacuum degassing.

The facility usually directs the treated effluent from the vacuum degasser treatment system to the BOF to be evaporated. Therefore, TBELs at Internal Outfall 701 will only apply when wastewater from 701 is expected to be discharged to the receiving stream. Flow at Internal Outfall 701 will be monitored regardless of the wastestream's fate.

Total Suspended Solids					
40 CFR	Production	Monthly Average		Daily Maximum	
		Categorical Limitation	Subtotal (lbs/day)	Categorical Limitation	Subtotal (lbs/day)
420.54 (NSPS)	4,069.1 Tons/Day	0.00261 lbs/1000lbs	21.2	0.00730 lbs/1000lbs	59.4
Total TSS Limitation		21.2 lbs/day		59.4 lbs/day	

Lead					
40 CFR	Production	Monthly Average		Daily Maximum	
		Categorical Limitation	Subtotal (lbs/day)	Categorical Limitation	Subtotal (lbs/day)
420.54 (NSPS)	4,069.1 Tons/Day	0.0000313 lbs/1000lbs	0.255	0.0000939 lbs/1000lbs	0.764
Total Lead Limitation		0.255 lbs/day		0.764 lbs/day	

Zinc					
40 CFR	Production	Monthly Average		Daily Maximum	
		Categorical Limitation	Subtotal (lbs/day)	Categorical Limitation	Subtotal (lbs/day)
420.54 (NSPS)	4,069.1 Tons/Day	0.0000469 lbs/1000lbs	0.382	0.000141 lbs/1000lbs	1.15
Total Zinc Limitation		0.382 lbs/day		1.15 lbs/day	

The categorical limitations included at Internal Outfall 701 are:

- TSS, Lead, and Zinc
  The above mentioned parameters have TBELs that are more stringent than the Water Quality-Based Effluent Limitations (WQBELs). Therefore, the TBELs for

monthly average and daily maximums, identified in the tables above, are included at Internal Outfall 701.

Internal Outfall 702:
Internal Outfall 702 consists of continuous casting process wastewaters (40 CFR 420.60). As indicated in the previous permit, New Source Performance Standards (NSPS) are included for the continuous casting operations and are more stringent than the BAT/BPT limitations.

The facility usually directs the treated effluent from the continuous casting treatment system to the BOF to be evaporated. Therefore, TBELs at Internal Outfall 702 will only apply when wastewater from 702 is expected to be discharged to the receiving stream. Flow at Internal Outfall 702 will be monitored regardless of the wastestream's fate.

Total Suspended Solids					
40 CFR	Production	Monthly Average		Daily Maximum	
		Categorical Limitation	Subtotal (lbs/day)	Categorical Limitation	Subtotal (lbs/day)
420.64 (NSPS)	11,558.7 Tons/Day	0.00261 lbs/1000lbs	60.3	0.00730 lbs/1000lbs	169
Total TSS Limitation		60.3 lbs/day		169 lbs/day	

Oil and Grease					
40 CFR	Production	Monthly Average		Daily Maximum	
		Categorical Limitation	Subtotal (lbs/day)	Categorical Limitation	Subtotal (lbs/day)
420.64 (NSPS)	11,558.7 Tons/Day	0.00104 lbs/1000lbs	24.0	0.00313 lbs/1000lbs	72.4
Total O+G Limitation		24.0 lbs/day		72.4 lbs/day	

Lead					
40 CFR	Production	Monthly Average		Daily Maximum	
		Categorical Limitation	Subtotal (lbs/day)	Categorical Limitation	Subtotal (lbs/day)
420.64 (NSPS)	11,558.7 Tons/Day	0.0000313 lbs/1000lbs	0.724	0.0000939 lbs/1000lbs	2.17
Total Lead Limitation		0.724 lbs/day		2.17 lbs/day	

Zinc					
40 CFR	Production	Monthly Average		Daily Maximum	
		Categorical Limitation	Subtotal (lbs/day)	Categorical Limitation	Subtotal (lbs/day)
420.64 (NSPS)	11,558.7 Tons/Day	0.0000469 lbs/1000lbs	1.08	0.000141 lbs/1000lbs	3.26

Total Zinc Limitation	1.08 lbs/day	3.26 lbs/day

The categorical limitations included at Internal Outfall 702 are:

- TSS, O+G, Lead, and Zinc
  The above mentioned parameters have TBELs that are more stringent than the Water Quality-Based Effluent Limitations (WQBELs). Therefore, the TBELs for monthly average and daily maximums, identified in the tables above, are included at Internal Outfall 702.

Outfall 012:
Outfall 012 is an emergency groundwater and stormwater outfall. No categorical limits apply at this point.

5.3 Water Quality-Based Effluent Limits

The water quality-based effluent limitations for this facility are based on water quality criteria in 327 IAC 2-1.5-8 or under the procedures described in 327 IAC 2-1.5-11 through 327 IAC 2-1.5-16 and implementation procedures in 327 IAC 5.

All Outfalls:

Narrative Water Quality Based Limits
The narrative water quality contained under 327 IAC 2-1.5-8(b)(1) (A)-(E) have been included in this permit to ensure that the narrative water quality criteria are met.

Numeric Water Quality Based Limits
The numeric water quality criteria and values contained in this permit have been calculated using the tables of water quality criteria under 327 IAC 2-1.5-8(b) & (c).

Flow
The permittee's flow is to be monitored in accordance with 327 IAC 5-2-13(a)2.

pH
Limitations for pH in the proposed permit are taken from 327 IAC 2-1.5-8(c)(2).

Free cyanide and Fluoride
Free cyanide and fluoride monitoring was included in the previous permit to determine if a Reasonable Potential to Exceed (RPE) Indiana WQBELs exists. Based on a review of the previous permit cycle's data, it was determined that an RPE for these parameters does not exist. Therefore, these parameters are removed from this permit.

Outfall 002:

Oil and Grease (O+G), Total Suspended Solids (TSS), and Temperature
The above mentioned parameters are carried over from the previous permit. Reporting requirements will be included for the above mentioned parameters at Outfall 002.

Total Residual Chlorine (TRC)
The TRC effluent limit was calculated in a WLA and is 1.6 lbs/day (0.016 mg/l) for monthly average and 3.8 lbs/day (0.037 mg/l) for the daily maximum. The limit is included because the facility chlorinates/dechlorinates water. The daily maximum WQBEL for TRC is greater than the Level of Detection (LOD) but less than the Level of Quantization (LOQ). Compliance with the daily maximum concentration limit will be demonstrated if the observed effluent concentrations are less than the LOQ (0.06 mg/l). Compliance with the daily maximum mass value will be demonstrated if the calculated mass value is less than 6.1 lbs/day. This is calculated by multiplying the LOQ by the discharge flow in MGD and by a conversion factor of 8.345. Monitoring for TRC shall be performed during Zebra or Quagga mussel intake chlorination, and continue for three additional days after Zebra or Quagga mussel treatment has been completed.

Mercury
Mercury limitations were included in the previous permit because it was identified in quantities that showed a Reasonable Potential to Exceed (RPE) Indiana's Water Quality Criteria. Therefore, WQBELs for mercury were calculated in the WLA report and identify the monthly average as 0.00013 lbs/day (1.3 ng/l) and the daily maximum as 0.00033 lbs/day (3.2 ng/l) at Outfall 002.

<u>Outfall 009</u>:

O+G, TSS, Lead, and Zinc
The above mentioned parameters are identified in the federally promulgated guidelines for this facility. The WQBELs for the above mentioned parameters are less stringent than the TBELs. TBELs will be limited at Internal Outfall 509. However, reporting requirements will be included for the above mentioned parameters at Outfall 009.

Temperature
Based on the results of instream sampling and a multi-discharger thermal model, the discharges from AM West do not have a reasonable potential to exceed a water quality criterion for temperature. However, in accordance with 327 IAC 5-2-11.5(e), the commissioner may require monitoring for a pollutant of concern even if it is determined that a WQBEL is not required based on a reasonable potential determination. Therefore, monitoring for temperature included at this outfall.

Total Residual Chlorine (TRC)
The TRC effluent limit was calculated in the WLA and is 3.7 lbs/day (0.014 mg/l) for monthly average and 8.5 lbs/day (0.032 mg/l) for the daily maximum. The limit is included because the facility chlorinates/dechlorinates water. The daily maximum WQBEL for TRC is greater than the Level of Detection (LOD) but less than the Level of Quantization (LOQ). Compliance with the daily maximum concentration limit will be demonstrated if the observed effluent concentrations are less than the LOQ (0.06 mg/l). Compliance with the daily maximum mass value will be demonstrated if the calculated mass value is less than 15.9 lbs/day. This is calculated by multiplying the LOQ by the discharge flow in MGD and by a conversion factor of 8.345. Monitoring for TRC shall be

performed during Zebra or Quagga mussel intake chlorination, and continue for three additional days after Zebra or Quagga mussel treatment has been completed.

Ammonia-N and Phenols
Section 301(g) of the Clean Water Act provides variances to BAT limitations. The facility has a previously approved 301(g) variance for ammonia and phenols. That variance approved net limitations for ammonia and phenols for Outfalls 009, 010, and 011. IDEM has reviewed the submittal from ArcelorMittal and, as a result of that review, determined that the net limit requirements for the three outfalls shall remain in the permit.

Mercury
Mercury limitations were included in the previous permit because it was identified in quantities that showed a Reasonable Potential to Exceed (RPE) Indiana's Water Quality Criteria. WQBELs for mercury were calculated in the WLA report and identified the monthly average as 0.00034 lbs/day (1.3 ng/l) and the daily maximum as 0.00085 lbs/day (3.2 ng/l). A schedule of compliance and then a streamlined mercury variance was granted during the previous permit cycle. The streamlined mercury variance became effective September 1, 2016. Therefore, the annual average interim limits of 1.9 ng/l still apply.

<u>Outfall 010:</u>

O+G, TSS, Lead, and Zinc
The above mentioned parameters are identified in the federally promulgated guidelines for this facility at Outfall 009. Since Outfall 010 accepts an overflow from 009, TBELs are still applicable at Internal Outfall 509. In addition, reporting requirements for the above mentioned parameters will be included at Outfall 010.

Total Residual Chlorine (TRC)
The TRC effluent limit was calculated in the WLA and is 4.5 lbs/day (0.014 mg/l) for monthly average and 10 lbs/day (0.032 mg/l) for the daily maximum. The limit is included because the facility chlorinates/dechlorinates water. The daily maximum WQBEL for TRC is greater than the Level of Detection (LOD) but less than the Level of Quantization (LOQ). Compliance with the daily maximum concentration limit will be demonstrated if the observed effluent concentrations are less than the LOQ (0.06 mg/l). Compliance with the daily maximum mass value will be demonstrated if the calculated mass value is less than 19.1 lbs/day. This is calculated by multiplying the LOQ by the discharge flow in MGD and by a conversion factor of 8.345. Monitoring for TRC shall be performed during Zebra or Quagga mussel intake chlorination, and continue for three additional days after Zebra or Quagga mussel treatment has been completed.

Temperature
Based on the results of instream sampling and a multi-discharger thermal model, the discharges from AM West do not have a reasonable potential to exceed a water quality criterion for temperature. However, in accordance with 327 IAC 5-2-11.5(e), the commissioner may require monitoring for a pollutant of concern even if it is determined that a WQBEL is not required based on a reasonable potential determination. Therefore, monitoring for temperature and thermal discharge is included at this outfall.

Ammonia and Phenols
Section 301(g) of the Clean Water Act provides variances to BAT limitations. The facility has a previously approved 301(g) variance for ammonia and phenols. That variance approved net limitations for ammonia and phenols for Outfalls 009, 010, and 011. The facility has submitted a request for a continuance of the 301(g) variance for ammonia and phenols (4AAP). IDEM has reviewed the submittal from ArcelorMittal and, as a result of that review, determined that the net limit requirements for the three outfalls shall remain in the permit.

Mercury
Mercury limitations were included in the previous permit because it was identified in quantities that showed a Reasonable Potential to Exceed (RPE) Indiana's Water Quality Criteria. WQBELs for mercury were calculated in the WLA report and identified the monthly average as 0.00041 lbs/day (1.3 ng/l) and the daily maximum as 0.0010 lbs/day (3.2 ng/l). A schedule of compliance and then a streamlined mercury variance was granted during the previous permit cycle. The streamlined mercury variance became effective September 1, 2016. Therefore, the annual average interim limits of 1.6 ng/l still apply.

<u>Outfall 011:</u>

TSS, O+G, Lead and Zinc
The above mentioned parameters are identified in the federally promulgated guidelines for this facility. The WQBELs for the above mentioned parameters is less stringent than the TBELs. TBELs will be monitored at Internal Outfalls 701 and 702. However, reporting requirements will be included for the above mentioned parameters at Outfall 011.

Ammonia and Phenols
Section 301(g) of the Clean Water Act provides variances to BAT limitations. The facility has a previously approved 301(g) variance for ammonia and phenols. That variance approved net limitations for ammonia and phenols for Outfalls 009, 010, and 011. The facility has submitted a request for a continuance of the 301(g) variance for ammonia and phenols (4AAP). IDEM has reviewed the submittal from ArcelorMittal and, as a result of that review, determined that the net limit requirements for the three outfalls shall remain in the permit.

Temperature
Based on the results of instream sampling and a multi-discharger thermal model, the discharges from AM West do not have a reasonable potential to exceed a water quality criterion for temperature. However, in accordance with 327 IAC 5-2-11.5(e), the commissioner may require monitoring for a pollutant of concern even if it is determined that a WQBEL is not required based on a reasonable potential determination. Therefore, monitoring for temperature and thermal discharge is included at this outfall.

Total Residual Chlorine (TRC)
The TRC effluent limit was calculated in the WLA and is 2.4 lbs/day (0.013 mg/l) for monthly average and 5.7 lbs/day (0.031 mg/l) for the daily maximum. The limit is included because the facility chlorinates/dechlorinates water. The daily maximum WQBEL for TRC is greater than the Level of Detection (LOD) but less than the Level of Quantization (LOQ). Compliance with the daily maximum concentration limit will be demonstrated if the observed effluent concentrations are less than the LOQ (0.06 mg/l). Compliance with the daily maximum mass value will be demonstrated if the calculated mass value is less than 11.1 lbs/day. This is calculated by multiplying the LOQ by the discharge flow in MGD and by a conversion factor of 8.345. Monitoring for TRC shall be performed during Zebra or Quagga mussel intake chlorination, and continue for three additional days after Zebra or Quagga mussel treatment has been completed.

Mercury
Mercury limitations were included in the previous permit because it was identified in quantities that showed a Reasonable Potential to Exceed (RPE) Indiana's Water Quality Criteria. Therefore, WQBELs for mercury were calculated in the WLA report and identify the monthly average as 0.00024 lbs/day (1.3 ng/l) and the daily maximum as 0.00059 lbs/day (3.2 ng/l).

Outfall 012

TSS, O+G, Zinc, and Lead
The above parameters were previously monitored at Outfall 012. As previously mentioned, this outfall has been plugged and only remains as an emergency groundwater and storm water outfall. Therefore, reporting requirements for the above permits are included in this permit and shall be monitored in the event a discharge occurs.

5.4 Whole Effluent Toxicity Testing (WETT)

Per 327 IAC 5-2-11.5(c)(2), the commissioner may include, in the NPDES permit, WETT requirements to generate the data needed to adequately characterized the toxicity of the effluent to aquatic life.

In accordance with 327 IAC 2-1.5-8, at all times the discharge from any and all point sources specified within this permit shall not cause receiving waters including the mixing zone, to contain substances, materials, floating debris, oil, scum, or other pollutants: 1) which are in amounts sufficient to be acutely toxic to or to otherwise severely injure or kill aquatic life, other animals, plants, or humans; and 2) outside the mixing zone, to contain substances in concentrations which on the basis of available scientific data are believed to be sufficient to injure, be chronically toxic to, or be carcinogenic, mutagenic, or teratogenic to humans, animals, aquatic life, or plants.

A discharge shall not cause acute toxicity, as measured by whole effluent toxicity tests (WETT), at any point in the waterbody. To assure protection of aquatic life, a discharge shall not cause

chronic toxicity, as measured by whole effluent toxicity tests, outside of the applicable mixing zone.

Therefore, the permittee is required to continue to conduct WETT to determine the toxicity of the final effluent. This does not preclude the requirement to submit WTA application(s) and/or worksheet(s) for the replacement or new additives/chemicals proposed for use at the site.

5.5 Antibacksliding

None of the limits included in this permit conflict with antibacksliding regulations found in 327 IAC 5-2-10(11), therefore, backsliding is not an issue.

5.6 Antidegradation

327 IAC 2-1.3 outlines the state's Antidegradation Standards and Implementation procedures. The Tier 1 antidegradation standard found in 327 IAC 2-1.3-3(a) applies to all surface waters of the state regardless of their existing water quality. Based on this standard, for all surface waters of the state, the existing uses and level of water quality necessary to protect those existing uses shall be maintained and protected. IDEM implements the Tier 1 antidegradation standard by requiring NPDES permits to contain effluent limits and best management practices (BMPs) for regulated pollutants that ensure the narrative and numeric water quality criteria applicable to each of the designated uses are achieved in the water and any designated uses of the downstream water are maintained and protected.

The Tier 2 antidegradation standard found in 327 IAC 2-1.3-3(b) applies to surface waters of the state where the existing quality for a parameter is better than the water quality criterion for that parameter established in 327 IAC 2-1-6 or 327 IAC 2-1.5. These surface waters are considered high quality for the parameter and this high quality shall be maintained and protected unless the commissioner finds that allowing a significant lowering of water quality is necessary and accommodates important social or economic development in the area in which the waters are located. IDEM implements the Tier 2 antidegradation standard for regulated pollutants with numeric water quality criteria quality adopted in or developed pursuant to 327 IAC 2-1-6 or 327 IAC 2-1.5 and utilizes the antidegradation implementation procedures in 327 IAC 2-1.3-5 and 2-1.3-6.

According to 327 IAC 2-1.3-1(b), the antidegradation implementation procedures in 327 IAC 2-1.3-5 and 2-1.3-6 apply to a proposed new or increased loading of a regulated pollutant to surface waters of the state from a deliberate activity subject to the Clean Water Act (CWA), including a change in process or operation that will result in a significant lowering of water quality.

The NPDES permit does not propose to establish a new or increased loading of a regulated pollutant; therefore, the Antidegradation Implementation Procedures in 327 IAC 2-1.3-5 and 2-1.3-6 do not apply to the permitted discharge.

The permittee is prohibited from undertaking any deliberate action that would result in a new or increased discharge of a bioaccumulative chemical of concern (BCC) or a new or increased permit limit for a regulated pollutant that is not a BCC unless information is submitted to the commissioner demonstrating that the proposed new or increased discharge will not cause a

significant lowering of water quality, or an antidegradation demonstration submitted and approved in accordance 327 IAC 2-1.3.

5.7 Storm Water

According to 40 CFR 122.26(b)(14)(ii) and 327 IAC 5-4-6(b)(1) facilities classified under Industrial Classification (SIC) Code 3312, are considered to be engaging in "industrial activity" for purposes of 40 CFR 122.26(b). Therefore, the permittee is required to have all storm water discharges associated with industrial activity permitted. Treatment for storm water discharges associated with industrial activities is required to meet, at a minimum, best available technology economically achievable/best conventional pollutant control technology (BAT/BCT) requirements. EPA has determined that non-numeric technology-based effluent limits have been determined to be equal to the best practicable technology (BPT) or BAT/BCT for storm water associated with industrial activity.

Storm water associated with industrial activity must be assessed to determine compliance with all water quality standards. The non-numeric storm water conditions and effluent limits contain the technology-based effluent limitations. Effluent limitations, as defined in the CWA, are restrictions on quantities, rates, and concentrations of constituents which are discharged. Effective implementation of these requirements should meet the applicable water quality based effluent limitations. Violation of any of these effluent limitations constitutes a violation of the permit.

Additionally, IDEM has determined that with the appropriate implementation of the required control measures and Best Management Practices (BMPs) found in Part I.D. of the permit, the discharge of storm water associated with industrial activity from this facility will meet applicable water quality standards and will not cause a significant lowering of water quality. Therefore, the storm water discharge is in compliance with Antidegradation Standards and Implementation Procedures found in 327 IAC 2-1.3 and an Antidegradation Demonstration is not required.

The TBELs require the permittee to minimize exposure of raw, final, or waste materials to rain, snow, snowmelt, and runoff. In doing so, the permittee is required, to the extent technologically available and economically achievable, to either locate industrial materials and activities inside or to protect them with storm resistant coverings. In addition, the permittee is required to: (1) use good housekeeping practices to keep exposed areas clean, (2) regularly inspect, test, maintain and repair all industrial equipment and systems to avoid situations that may result in leaks, spills, and other releases of pollutants in storm water discharges, (3) minimize the potential for leaks, spills and other releases that may be exposed to storm water and develop plans for effective response to such spills if or when they occur, (4) stabilize exposed area and contain runoff using structural and/or non-structural control measures to minimize onsite erosion and sedimentation, and the resulting discharge of pollutants, (5) divert, infiltrate, reuse, contain or otherwise reduce storm water runoff, to minimize pollutants in the permitted facility discharges, (6) enclose or cover storage piles of salt or piles containing salt used for deicing or other commercial or industrial purposes, including maintenance of paved surfaces, (7) train all employees who work in areas where industrial materials or activities are exposed to storm water, or who are responsible for implementing activities necessary to meet the conditions of this permit (e.g., inspectors, maintenance personnel), including all members of your Pollution Prevention Team, (8) ensure that waste, garbage and floatable debris are not discharged to receiving waters by keeping exposed areas free of such materials or by intercepting them before

they are discharged, and (9) minimize generation of dust and off-site tracking of raw, final or waste materials.

To meet the non-numeric effluent limitations in Part I.D.4, the permit requires the facility to select control measures (including BMPs) to address the selection and design considerations in Part I.D.3.

The permittee must control its discharge as necessary to meet applicable water quality standards. It is expected that compliance with the non-numeric effluent limitations and other terms and conditions in this permit will meet this effluent limitation. However, if at any time the permittee, or IDEM, determines that the discharge causes or contributes to an exceedance of applicable water quality standards, the permittee must take corrective actions, and conduct follow-up monitoring.

"Terms and Conditions" to Provide Information in a Storm Water Pollution Prevention Plan (SWPPP)

Distinct from the effluent limitation provisions in the permit, the permit requires the discharger to prepare a SWPPP for the permitted facility. The SWPPP is intended to document the selection, design, installation, and implementation (including inspection, maintenance, monitoring, and corrective action) of control measures being used to comply with the effluent limits set forth in Part I.D. of the permit. In general, the SWPPP must be kept up-to-date, and modified when necessary, to reflect any changes in control measures that were found to be necessary to meet the effluent limitations in the permit.

The requirement to prepare a SWPPP is not an effluent limitation, rather it documents what practices the discharger is implementing to meet the effluent limitations in Part I.D. of the permit. The SWPPP is not an effluent limitation because it does not restrict quantities, rates, and concentrations of constituents which are discharged. Instead, the requirement to develop a SWPPP is a permit "term or condition" authorized under sections 402(a)(2) and 308 of the Act. Section 402(a)(2) states, "[t]he Administrator shall prescribe conditions for [NPDES] permits to assure compliance with the requirements of paragraph (1) of this subsection, including conditions on data and information collection, reporting, and such other requirements as he deems appropriate." The SWPPP requirements set forth in this permit are terms or conditions under the CWA because the discharger is documenting information on how it intends to comply with the effluent limitations (and inspection and evaluation requirements) contained elsewhere in the permit. Thus, the requirement to develop a SWPPP and keep it up-to-date is no different than other information collection conditions, as authorized by section 402(a)(2).

It should be noted that EPA has developed a guidance document, "Developing your Storm Water Pollution Prevention Plan – A guide for Industrial Operators (EPA 833-B09-002), February 2009, to assist facilities in developing a SWPPP. The guidance contains worksheets, checklists, and model forms that should assist a facility in developing a SWPPP.

Public availability of documents

Part I.E.2.d(2) of the permit requires that the permittee retain a copy of the current SWPPP at the facility and it must be immediately available, at the time of an onsite inspection or upon

request, to IDEM. Additionally, interested persons can request a copy of the SWPPP through IDEM. By requiring members of the public to request a copy of the SWPPP through IDEM, the Agency is able to provide the permittees with assurance that any Confidential Business Information contained within the permitted facility's SWPPP is not released to the public.

5.8 Water Treatment Additives

In the event that changes are to be made in the use of water treatment additives that could significantly change the nature of, or increase the discharge concentration of any of the additives contributing to each respective Outfall, the permittee shall notify the IDEM as required in Part II.C.1 of the permit. The use of any new or changed water treatment additives/chemicals or dosage rates shall not cause the discharge from any permitted outfall to exhibit chronic or acute toxicity. Acute and chronic aquatic toxicity information must be provided with any notification regarding any new or changed water treatment additives or dosage rates. The following is a list of water treatment additives currently approved for use at the facility: Bleach; NALSPERSE 73551; Nalco 7408; NALCLEAR 7766; Sulfuric Acid; Sodium Hydroxide; Ultrion 8187; Nalco SURE-COOL 1393; Nalco 3DT195; Nalco CORE SHELL 71301; Nalco ELIMIN-OX; Nalco NexGuard 22300; Nalco 1720; Nalco 3DT179; Nalco 3DT190; Nalco 1392; Nalco Tri-ACR 1800; Ferric Chloride; Hydrated Lime; Nalco 7408; Nalco 8103P; NALSPERSE 7308; Nalco 8187; Nalco 7465; and Nalco 8356D.

6.0 PERMIT DRAFT DISCUSSION

6.1 Discharge Limitations

The proposed final effluent limitations are based on the more stringent of the Indiana WQBELs, TBELS, or approved TMDLs and NPDES regulations as appropriate for each regulated outfall. Sections 5.2 and 5.3 of this document explain the rationale for the effluent limitations at each Outfall.

Outfall 002

Parameter	Monthly Average	Daily Maximum	Units	Source of Limitation
Flow	Report	Report	MGD	IAC
TSS	Report	Report	mg/l & lbs/d	WQBEL
O & G	Report	Report	mg/l & lbs/d	WQBEL
Chlorine, Total Residual (TRC)	1.6 0.016	3.8 0.037	lbs/d mg/l	WQBEL
Mercury	0.00013 1.3	0.00033 3.2	lbs/d ng/l	WQBEL
Temperature	Report	Report	°F	WQBEL

Parameter	Daily Minimum	Daily Maximum	Units	Source of Limitation
pH	6.0	9.0	Std Units	WQBEL

Outfall 009

Parameter	Monthly Average	Daily Maximum	Units	Source of Limitation
Flow	Report	Report	MGD	IAC
TSS	Report	Report	mg/l & lbs/d	WQBEL
O & G	Report	Report	mg/l & lbs/d	WQBEL
Lead	Report	Report	ug/l & lbs/d	WQBEL
Zinc	Report	Report	ug/l & lbs/d	WQBEL
Ammonia, as N	425 Report	1000 Report	lbs/d mg/l	301(g)
Phenols (4AAP)	Report Report	11 Report	lbs/d mg/l	301(g)
Chlorine, Total Residual (TRC)	3.7 0.014	8.5 0.032	lbs/d mg/l	WQBEL
Mercury Interim	0.00034 1.3 1.9	0.00085 3.2 Report	lbs/d ng/l ng/l	WQBEL SMV
Temperature	Report	Report	°F	WQBEL
Whole Effluent Toxicity Testing	3.1	 1.0	TUc TUa	WQBEL

Parameter	Daily Minimum	Daily Maximum	Units	Source of Limitation
pH	6.0	9.0	Std Units	WQBEL

Internal Outfall 509:

Parameter	Monthly Average	Daily Maximum	Units	Source of Limitation
Flow	Report	Report	MGD	IAC
TSS	546 Report	1642 Report	lbs/d mg/l	TBEL
Lead	1.84 Report	5.52 Report	lbs/d ug/l	TBEL
Zinc	2.75 Report	8.27 Report	lbs/d ug/l	TBEL
Ammonia, as N	Report Report	Report Report	lbs/d mg/l	301(g)
Phenols (4AAP)	Report Report	Report Report	lbs/d mg/l	301(g)
Total Cyanide	18.4 Report	36.8 Report	lbs/d mg/l	TBEL

Outfall 010

Parameter	Monthly Average	Daily Maximum	Units	Source of Limitation
Flow	Report	Report	MGD	IAC
TSS	Report	Report	mg/l & lbs/d	WQBEL
O & G	Report	Report	mg/l & lbs/d	WQBEL
Lead	Report	Report	ug/l & lbs/d	WQBEL
Zinc	Report	Report	ug/l & lbs/d	WQBEL
Ammonia, as N	100 Report	300 Report	lbs/d mg/l	301(g)
Phenols (4AAP)	Report Report	5 Report	lbs/d mg/l	301(g)
Chlorine, Total Residual (TRC)	4.5 0.014	10 0.032	lbs/d mg/l	WQBEL
Mercury Interim	0.00041 1.3 1.6	0.0010 3.2 Report	lbs/d ng/l ng/l	WQBEL SMV
Temperature	Report	Report	°F	WQBEL

Parameter	Daily Minimum	Daily Maximum	Units	Source of Limitation
pH	6.0	9.0	Std Units	WQBEL

Outfall 011

Parameter	Monthly Average	Daily Maximum	Units	Source of Limitation
Flow	Report	Report	MGD	IAC
TSS	Report	Report	mg/l & lbs/d	WQBEL
O & G	Report	Report	mg/l & lbs/d	WQBEL
Lead	Report	Report	ug/l & lbs/d	WQBEL
Zinc	Report	Report	ug/l & lbs/d	WQBEL
Ammonia, as N	75 Report	150 Report	lbs/d mg/l	301(g)
Phenols (4AAP)	Report Report	5 Report	lbs/d mg/l	301(g)
Chlorine, Total Residual (TRC)	2.4 0.013	5.7 0.031	lbs/d mg/l	WQBEL
Mercury	0.00024 1.3	0.00059 3.2	lbs/d ng/l	WQBEL
Temperature	Report	Report	°F	WQBEL
Whole Effluent Toxicity Testing	5.3	 1.0	TUc TUa	WQBEL

Parameter	Daily Minimum	Daily Maximum	Units	Source of Limitation
pH	6.0	9.0	Std Units	WQBEL

Internal Outfall 701

Parameter	Monthly Average	Daily Maximum	Units	Source of Limitation
Flow	Report	Report	MGD	IAC
TSS	21.2 Report	59.4 Report	lbs/d mg/l	TBEL
Lead	0.255 Report	0.764 Report	lbs/d ug/l	TBEL
Zinc	0.382 Report	1.15 Report	lbs/d ug/l	TBEL

Internal Outfall 702

Parameter	Monthly Average	Daily Maximum	Units	Source of Limitation
Flow	Report	Report	MGD	IAC
TSS	60.3 Report	169 Report	lbs/d mg/l	TBEL
O & G	24.0 Report	72.4 Report	lbs/d mg/l	TBEL
Lead	0.724 Report	2.17 Report	lbs/d ug/l	TBEL
Zinc	1.08 Report	3.26 Report	lbs/d ug/l	TBEL

Outfall 012

Parameter	Monthly Average	Daily Maximum	Units	Source of Limitation
Flow	Report	Report	MGD	IAC
TSS	Report	Report	mg/l & lbs/d	WQBEL
O & G	Report	Report	mg/l & lbs/d	WQBEL
Lead	Report	Report	ug/l & lbs/d	WQBEL
Zinc	Report	Report	ug/l & lbs/d	WQBEL

Parameter	Daily Minimum	Daily Maximum	Units	Source of Limitation
pH	6.0	9.0	Std Units	WQBEL

6.2 Monitoring Conditions and Rationale

Analytical and sampling methods used shall conform to the version of 40 CFR 136 as referenced in 327 IAC 5-2-13(d)(1).

Outfall 002

Parameter	Minimum Frequency	Sample Type
Flow	1 X Weekly	24 Hr. Total
TSS	1 X Weekly	24 Hr. Comp.
O & G	1 X Weekly	Grab
Chlorine, Total Residual (TRC)	5 X Weekly	Grab
Mercury	Bi-Monthly	Grab
Temperature	2 X Weekly	Grab
pH	1 X Weekly	Grab

Outfall 009

Parameter	Minimum Frequency	Sample Type
Flow	1 X Weekly	24 Hr. Total
TSS	1 X Weekly	24 Hr. Comp.
O & G	1 X Weekly	Grab
Lead	1 X Weekly	24 Hr. Comp.
Zinc	1 X Weekly	24 Hr. Comp.
Ammonia, as N	1 X Weekly	24 Hr. Comp.
Phenols (4AAP)	1 X Weekly	Grab
Chlorine, Total Residual (TRC)	5 X Weekly	Grab
Mercury	Bi-Monthly	Grab
Temperature	2 X Weekly	Grab
Whole Effluent Toxicity Testing	See Part I.F of the Permit	
pH	1 X Weekly	Grab

Internal Outfall 509

Parameter	Minimum Frequency	Sample Type
Flow	2 X Weekly	24 Hr. Total
TSS	2 X Weekly	24 Hr. Comp.
O & G	2 X Weekly	Grab
Lead	2 X Weekly	24 Hr. Comp.
Zinc	2 X Weekly	24 Hr. Comp.
Ammonia, as N	1 X Weekly	24 Hr. Comp.
Phenols (4AAP)	1 X Weekly	Grab
Total Cyanide	2 X Weekly	Grab

Outfall 010

Parameter	Minimum Frequency	Sample Type
Flow	1 X Weekly	24 Hr. Total
TSS	1 X Week	24 Hr. Comp.
O & G	1 X Week	Grab
Lead	1 X Week	24 Hr. Comp.
Zinc	1 X Weekly	24 Hr. Comp.
Ammonia, as N	1 X Weekly	24 Hr. Comp.
Phenols (4AAP)	1 X Weekly	Grab
Chlorine, Total Residual (TRC)	5 X Weekly	Grab
Mercury	Bi-Monthly	Grab
Temperature	2 X Weekly	Grab
pH	1 X Weekly	Grab

Outfall 011

Parameter	Minimum Frequency	Sample Type
Flow	1 X Weekly	24 Hr. Total
TSS	1 X Weekly	24 Hr. Comp.
O & G	1 X Weekly	Grab
Lead	1 X Weekly	24 Hr. Comp.
Zinc	1 X Monthly	24 Hr. Comp.
Ammonia, as N	1 X Weekly	24 Hr. Comp.
Phenols (4AAP)	1 X Weekly	Grab
Chlorine, Total Residual (TRC)	5 X Weekly	Grab
Mercury	Bi-Monthly	Grab
Temperature	2 X Weekly	Grab
Whole Effluent Toxicity Testing	See Part I.F of the permit	
pH	1 X Weekly	Grab

Internal Outfall 701

Parameter	Minimum Frequency	Sample Type
Flow	2 X Weekly	24 Hr. Total
TSS	2 X Weekly	24 Hr. Comp.
Lead	2 X Weekly	24 Hr. Comp.
Zinc	2 X Weekly	24 Hr. Comp.

Internal Outfall 702

Parameter	Minimum Frequency	Sample Type
Flow	2 X Weekly	24 Hr. Total
TSS	2 X Weekly	24 Hr. Comp.
O & G	2 X Weekly	Grab
Lead	2 X Weekly	24 Hr. Comp.
Zinc	2 X Weekly	24 Hr. Comp.

Outfall 012

Parameter	Minimum Frequency	Sample Type
Flow	1 X Weekly	24 Hr. Total
TSS	1 X Weekly	24 Hr. Comp.
O & G	1 X Weekly	Grab
Lead	1 X Weekly	24 Hr. Comp.
Zinc	1 X Weekly	24 Hr. Comp.
pH	1 X Weekly	Grab

6.3 Schedule of Compliance

There are no effluent limits or other requirements that require a schedule of compliance.

6.4 Special Conditions and Other Permit Requirements

6.4.1 Clean Water Act Section 316(b) Cooling Water Intake Structure(s) (CWIS)

Introduction

In accordance with 40 CFR 401.14, the location, design, construction and capacity of cooling water intake structures of any point source for which a standard is established pursuant to section 301 or 306 of the Act shall reflect the best technology available for minimizing adverse environmental impact.

The EPA promulgated a Clean Water Act (CWA) section 316(b) regulation on August 15, 2014, that establishes standards for cooling water intake structures. 79 Fed. Reg. 48300-439 (August 15, 2014). The regulation establishes best technology available standards to reduce impingement and entrainment of aquatic organisms at existing power generation and manufacturing facilities and it became effective on October 14, 2014.

For permits expiring prior to July 2018, the permittee can (1) negotiate an alternative schedule for submitting required information with the Director (IDEM) after demonstrating need, or (2) request waiver(s) for submitting required information. An alternative schedule for submission of information required under the current CWA section 316(b), or waiver(s) of submittal requirements shall be reviewed and approved by IDEM. Upon approval of such alternative schedules and /or waivers, or until the time the required information/reports are submitted and

the permit is renewed or modified following public notice, the IDEM is required to make a BTA determination using Best Professional Judgment (BPJ) to comply with CWA Section 316(b) based on existing information. The BTA determination is subject to change after the required information is submitted in accordance with the federal regulations effective October 14, 2014.

A copy of the permit renewal application was sent to U.S. Fish and Wildlife on June 6, 2016. No comments were received.

Indiana Harbor West completed an impingement and entrainment study and report required by its current permit at about the same time the permit renewal application was due. This study was dictated by the current NPDES permit before promulgation of the final rules with the intent that it would meet the requirements of the final rule. Unfortunately, the final rule changed in the interim and the study contained some, but not all, of the information required by 40 CFR 122.21(r). Since this study was a permit requirement, resources were focused on the completion of the study rather than assembling all of the information required by 40 CFR 122.21(r). Therefore, additional time is needed to evaluate the results of the study as well as assemble the remainder of the required information. The permittee is required to submit the information as soon as practicable, but no later than July 14, 2018.

Intake Water Structures Descriptions

No. 1 Pump House

- Indiana Harbor and Ship Canal is the source water.
- The No. 1 Pump House is located in the interior of the Plant at the terminus of a narrow intake canal approximately 1,000 ft long and 7 ft wide. The pump house was constructed in 1939 to provide cooling water and process make-up water to the No. 3 and 4 Blast Furnaces. The pump house was initially designed to contain six service pumps of various capacities. Since then the pumps have been replaced and two removed entirely.
- Currently, only two pumps are operational.
- 49 MGD effective design intake capacity.
- Four vertical traveling screens (single entry/exit) in a common wet well. Two screens have been retrofitted to function in a fixed panel mode utilizing No. 0.51 diamond-shaped, flattened-expanded aluminum mesh. Of the remaining two vertical traveling screens, one has been removed and screen opening blocked. The other is fitted with 0.50” stainless steel square-mesh screening.
- 0.42 ft/s velocity under normal operating conditions as calculated by the permittee.
- 0.86 ft/s total rated capacity velocity as calculated by the permittee.
- Fixed screens are manually removed and washed as needed. The traveling screen includes a wash system used to remove impinged debris and/or fish, which are washed into one of two collection baskets. Collection basket contents are returned manually discarded.

No. 2 Pump House

- Lake Michigan is the source water.
- The No. 2 Pump House is located at the terminus of an intake canal approximately 1.2 miles long and 70 feet wide, opening to 300 feet at the entrance to the pump

house forebay. The No. 2 Pump House was originally designed with three circulating pumps and two service pumps.

- Currently, only two circulating pumps and one service pump is in operation.
- 87 MGD flow based on current and fixed pump configuration and operation.
- Centralized Screen House that serves the No. 2 Pump House, Low Head Pump House, and Power House Pump House. The only potential for entrainment and/or impingement as a result of operation of the No. 2 Pump House is at the Centralized Screen House.
- Three vertical traveling screens (single entry/exit) in a common wet well with 0.35" stainless steel square-mesh screening and two fixed panel screens utilizing No. 0.51 diamond-shaped, flattened-expanded aluminum mesh.
- 1.66 ft/s velocity under normal operating conditions as calculated by the permittee.
- 2.66 ft/s total rated capacity velocity as calculated by the permittee.
- Fixed screens are manually removed and washed as needed. Traveling screens include a wash system used to remove impinged debris and/or fish, which are washed into a common collection basket. The collection basket contents are returned manually discarded.

Low Head Pump House

- After passing through screens in the Common Screen House, water is directed via vertical shaft to a deep tunnel approximately 3,137 feet to the Low Head Pump Station. The only potential for entrainment and/or impingement as a result of operation of the Low Head Pump House is at the Centralized Screen House.
- Currently, there are two operable pumps.
- Approximately 101 MGD flow based on current pump configuration and operation.

Power House Pump House

- After passing through screens in the Common Screen House, non-contact cooling water for the Power House is drawn directly from the deep tunnel. The only potential for entrainment and/or impingement as a result of operation of the Power House Pump House is at the Centralized Screen House.
- Currently, there are ten operable pumps.
- Approximately 117 MGD flow based on current pump configuration and operation.

No. 3 Pump House

- Lake Michigan is the source water.
- The No. 3 Pump House is located in the northeast portion of the facility and withdrawals water from the same intake canal as the No. 2 Pump House. The No. 3 Pump House was originally designed for eight pumps but only four were installed and provides cooling water to the No. 3 Cold Strip Mill and the 84-inch Hot Strip Mill via four pumps.
- Currently, there are operable pumps but only two are used during normal operations.
- 144 MGD flow based on current pump configuration during normal operations.
- Six vertical traveling screens (single entry/exit) in a common wet well with most utilizing a 1/8" stainless steel woven-mesh screening and the rest with standard 3/8" mesh. Four of the six screens are currently operated.

- 0.30 ft/s velocity under normal operating conditions as calculated by the permittee.
- 1.33 ft/s total rated capacity velocity as calculated by the permittee.
- The traveling screens are designed with individual wash systems used to remove impinged debris and/or fish, which are washed into a common collection trough.

Conclusion

IDEM has determined using best professional judgment (BPJ) that the existing cooling water intake structure at the facility represents Best Technology Available (BTA) to minimize adverse environmental impact in accordance with Section 316(b) of the federal Clean Water Act (33 U.S.C. section 1326) based on the following information at this time:

- There has been a substantial reduction in water intake demand;
- Fewer pumps are currently used; and
- An effective increase in screen surface area due to the use of fewer pumps.

IDEM will reassess this BTA determination during the next permit cycle.

Permit Conditions

In accordance with the recently promulgated rules at 40 CFR 122 and 40 CFR 125, the owner or operator of a facility that has CWIS with a Design Intake Flow (DIF) or Actual Intake Flow (AIF) > 125 MGD must submit the information required at 40 CFR 122.21(r)(2) through (13), including all of the associated supporting documentation and/or studies, no later than July 14, 2018, unless an alternate schedule for submission is approved or a waiver of a particular requirement is requested and granted under 40 CFR 125.95. In addition, the permittee shall comply with requirements below:

1. In accordance with 40 CFR 125.98(b)(1), nothing in this permit authorizes take for the purposes of a facility's compliance with the Endangered Species Act.

2. At all times properly operate and maintain the intake equipment.

3. Inform IDEM of any proposed changes to the CWIS or proposed changes to operations at the facility that affect the information taken into account in the current BTA evaluation.

4. There shall be no discharge of debris from intake screen washing which will settle to form objectionable deposits which are in amounts sufficient to be unsightly or deleterious, or which will produce colors or odors constituting a nuisance.

5. All required reports shall be submitted to the IDEM, Office of Water Quality, NPDES Permits Branch.

6. Submit the information required to be considered by the Director per 40 CFR 125.98 to assist IDEM with the fact sheet or statement of basis for entrainment BTA, no later than July 14, 2018.

6.4.3 Streamlined Mercury Variance (SMV)

In accordance with 327 IAC 5-3.5, the permittee applied for and was granted a Streamlined Mercury Variance (SMV) from the water quality based effluent limitations for mercury in the permit modification effective September 1, 2016. The SMV applies to the discharge of mercury from Outfall(s) 009 and 010.

The permittee submitted a SMV renewal application as part of the NPDES permit renewal application. As required by rule, the SMV renewal application included bi-monthly monitoring data for Total Mercury and the Pollutant Minimization Program Plan (PMPP). The PMPP functions to identify and minimize the discharge of mercury from Outfall(s) 009 and 010 based on the rule requirements found at 327 IAC 5-3.5.

IDEM conducted a review of all of the mercury data (including duplicates) collected from Outfall(s) 009 and 010 to determine the interim limit. In accordance with 327 IAC 5-3.5-8, the interim effluent limit for Total Mercury will be 1.9 ng/l for Outfall 009 and 1.6 ng/l for Outfall 010.

For the term of the NPDES permit, the permittee is subject to the interim discharge limit developed under the provisions of 327 IAC 5-3.5-8. Each reporting period (i.e., bi-monthly), the permittee shall report both a daily maximum value and an annual average value for mercury. The annual average value is to be calculated as the average of the measured effluent daily values for mercury measured over the most recent (rolling) twelve-month period. Compliance with the interim discharge limit will be achieved when the average of daily values measured over the most recent (rolling) twelve-month period is less than the interim discharge limit.

6.4.4 301(g) Variance Request

Section 301(g) of the Clean Water Act and 327 IAC 5-3-4(b)(2) allow for a variance from the applicable BAT requirements through the development of Proposed Modified Effluent Limitations (PMELs) for the non-conventional pollutants of ammonia, chlorine, color, iron, and total phenols (4AAP) provided the following conditions are met:

1. The proposed modified effluent limits (PMELs) will meet the categorical BPT effluent limits (Technology Based Effluent Limits) or applicable water quality based effluent limits (WQBEL), whichever are more stringent;

2. The PMELs will not result in any additional requirements on other point or non-point sources;

3. The PMELs will not interfere with the attainment or maintenance of water quality which will protect public water supplies, aquatic life, and recreational activities; and,

4. The PMELs will not result in the discharge of pollutants in quantities which may reasonably be anticipated to pose an unacceptable risk to human health or the environment because of bioaccumulation, persistency in the environment, acute toxicity, chronic toxicity (including carcinogenicity, mutagenicity, or teratogenicity, or synergistic properties).

Previously, this agency granted Section 301(g) variances for ammonia (as N) and phenols (4AAP) in the ironmaking and sintering process wastewaters. This request was identified as approved by U.S.EPA to this agency in a letter dated March 3, 1986. Therefore, the previous permit included net limits for ammonia (as N) and phenols (4AAP) at Outfalls 009, 010, and 011 since such wastewaters were discharged through each of those outfalls. The permittee was required to sample intake water at pumping stations 1 and 2 for ammonia and phenols at the same frequency as the discharge waters. Net values were calculated by subtracting the measured intake values from the measured effluent values.

In a letter dated August 24, 2007, the permittee identified the reconfiguration of wastestreams and, more specifically, the redirection of blast furnace/sinter plant wastestreams. The permittee stated that the Section 301(g) variance limits for ammonia and phenols should apply at the blast furnace/sinter plant internal outfall (proposed Internal Outfall 510 at the time) as gross limitations. This request was updated in a June 15, 2009, letter identifying PMELs for ammonia of 400 lbs/day monthly average and 1,000 lbs/day daily maximum and 10 lbs/day daily maximum for phenols at the internal outfall.

Furthermore, in a letter dated December 20, 2010, the internal outfall was changed from Internal Outfall 510 to 509. Internal Outfall 509 is now the NPDES permit compliance monitoring station for process water discharges from the blast furnace and sinter plant. Outfall 509 discharges to Outfall 009 to the Indiana Harbor Ship Canal. After the new treatment plant for the blast furnaces and sinter plant was constructed and placed into operation, the ammonia limits initially requested in 2009 were not sufficient so an updated request was submitted dated May 10, 2011 requesting the entire 301 (g) limits as gross limits at internal outfall 509.

During the previous permit renewal, IDEM reviewed the submittal from ArcelorMittal and, as a result of that review, determined that the net limit requirements for the three outfalls shall remain in the permit. The variance assigned specific net limits for ammonia (as N) and Phenols (4AAP) as before but since the sinter plant and blast furnace systems were removed from the Outfall 011 discharge and redirected to Outfall 009 the ammonia and phenol allocations have been rearranged but the total net limits will still apply across the three outfalls as before.

The categorical effluent limitation guidelines for ammonia (as N) and phenols (4AAP) which form the basis for the BPT and BAT effluent limits for discharges from Internal Outfall 509 are found at 40 CFR 420.32(a) and 420.33(a), respectively.

ArcelorMittal Indiana Harbor West has requested, with this renewal application, for the PMELs for ammonia (as N) and phenols (4AAP) based on the 301(g) variance continuance request dated June 15, 2009, and revised on May 10, 2011 in the context of Indiana's currently applicable water quality standards and IDEM's procedures for conducting wasteload allocations, to be continued in the renewed permit.

The facility is required to submit an updated 301(g) variance request no later than with the renewal application for the next permit cycle if the facility intends to continue the variance.

6.4.5 Polychlorinated Biphenyl (PCB)

There shall be no discharge of polychlorinated biphenyl (PCB) compounds attributable to facility operations such as those historically used in transformer fluids. In order to determine compliance with the PCB discharge prohibition, the permittee shall provide the following PCB data with the next NPDES permit renewal application for at least one sample taken from each final outfall. The corresponding facility water intakes shall be monitored at the same time as the final outfalls.

Pollutant	Test Method	LOD	LOQ
PCBs*	EPA 608	0.1 ug/L	0.3 ug/L

*PCB 1242, 1254, 1221, 1232, 1248, 1260, 1016

6.5 Spill Response and Reporting Requirement

Reporting requirements associated with the Spill Reporting, Containment, and Response requirements of 327 IAC 2-6.1 are included in Part II.B.2.(d), Part II.B.3.(c), and Part II.C.3. of the NPDES permit. Spills from the permitted facility meeting the definition of a spill under 327 IAC 2-6.1-4(15), the applicability requirements of 327 IAC 2-6.1-1, and the Reportable Spills requirements of 327 IAC 2-6.1-5 (other than those meeting an exclusion under 327 IAC 2-6.1-3 or the criteria outlined below) are subject to the Reporting Responsibilities of 327 IAC 2-6.1-7.

It should be noted that the reporting requirements of 327 IAC 2-6.1 do not apply to those discharges or exceedances that are under the jurisdiction of an applicable permit when the substance in question is covered by the permit and death or acute injury or illness to animals or humans does not occur. In order for a discharge or exceedance to be under the jurisdiction of this NPDES permit, the substance in question (a) must have been discharged in the normal course of operation from an outfall listed in this permit, and (b) must have been discharged from an outfall for which the permittee has authorization to discharge that substance.

6.6 Permit Processing/Public Comment

Pursuant to IC 13-15-5-1, IDEM will publish a general notice in the newspaper with the largest general circulation within the above county. A 30-day comment period is available in order to solicit input from interested parties, including the general public. Comments concerning the draft permit should be submitted in accordance with the procedure outlined in the enclosed public notice form.

Attachment A
Water Quality Assessment

Use Classifications

The Indiana Harbor Canal originates at the confluence of the East and West Branches of the Grand Calumet River. It runs north for two miles where it is joined by the Lake George Canal. The Lake George Canal originates two miles to the west of its confluence with the Indiana Harbor Canal. The Indiana Harbor Canal then runs two miles northeast to the Indiana Harbor. The Indiana Harbor runs one mile to the north before emptying into the open waters of Lake Michigan. The "open waters of Lake Michigan" is defined at 327 IAC 2-1.3-2(30) as the following:

"…(A) The surface waters within Lake Michigan lakeward from a line drawn across the mouth of tributaries to the lake, including all surface waters enclosed by constructed breakwaters.
(B) For the Indiana Harbor Ship Canal, the boundary of the open waters of Lake Michigan is delineated by a line drawn across the mouth of the harbor from the East Breakwater Light (1995 United States Coast Guard Light List No. 19675) to the northernmost point of the shore line along the west side of the harbor."

Based on this definition, IDEM considers the shoreline on the west side of the breakwall, which creates a channel for the ArcelorMittal West Nos. 2 and 3 water intakes, as the western boundary of the Indiana Harbor Ship Canal. The breakwall creates a barrier between the channel and the Indiana Harbor during critical flow conditions, so the channel will not be considered part of the Indiana Harbor for purposes of conducting wasteload allocations. Instead, it will be treated as a tributary within the Lake Michigan drainage basin.

ArcelorMittal has outfalls that discharge to the Indiana Harbor Canal downstream of the Lake George Canal, outfalls that discharge to the Indiana Harbor and an outfall that discharges to the channel behind the breakwall on the west side of the Indiana Harbor. As noted above, this channel was considered a tributary within the Lake Michigan drainage basin. The Indiana Harbor Canal, the Indiana Harbor and the channel for the ArcelorMittal West Nos. 2 and 3 water intakes are designated for full-body contact recreation and shall be capable of supporting a well-balanced, warm water aquatic community. ArcelorMittal West has a water intake in the Indiana Harbor so the Indiana Harbor is designated as an industrial water supply. The Indiana portion of the open waters of Lake Michigan is designated for full-body contact recreation; shall be capable of supporting a well-balanced, warm water aquatic community; is designated as salmonid waters and shall be capable of supporting a salmonid fishery; is designated as a public water supply; and, is designated as an industrial water supply. The Indiana portion of the open waters of Lake Michigan is also classified as an outstanding state resource water. These waterbodies are identified as waters of the state within the Great Lakes system. As such, they are subject to the water quality standards and implementation procedures specific to Great Lakes system dischargers as found in 327 IAC 2-1.5, 327 IAC 5-1.5, and 327 IAC 5-2.

Section 303(d) of the Clean Water Act requires states to identify waters, through their Section 305(b) water quality assessments, that do not or are not expected to meet applicable water quality standards with federal technology based standards alone. States are also required to develop a priority ranking for these waters taking into account the severity of the pollution and the designated uses of the waters. Once this

listing and ranking of impaired waters is completed, the states are required to develop Total Maximum Daily Loads (TMDLs) for these waters in order to achieve compliance with the water quality standards. Indiana's 2014 303(d) List of Impaired Waters was developed in accordance with Indiana's Water Quality Assessment and 303(d) Listing Methodology for Waterbody Impairments and Total Maximum Daily Load Development for the 2014 Cycle. As of the 2014 303(d) List of Impaired Waters, the following impairments were listed for waters to which the permittee discharges:

Table 1

Assessment Unit	Waterbody	Impairments	ArcelorMittal West Outfalls
INC0163_T1001	Indiana Harbor Canal	Impaired Biotic Communities, Oil and Grease, *E. coli* and PCBs in Fish Tissue	002, 009 and 010
INC0163G_G1078	Indiana Harbor	Free Cyanide, Mercury in Fish Tissue and PCBs in Fish Tissue	011 and 012
INM00G1000_00	Lake Michigan	Mercury in Fish Tissue and PCBs in Fish Tissue	None

Water Quality Based Effluent Limitations

The water quality-based effluent limitations included in the 2011 permit and documented in the Fact Sheet were developed as part of a wasteload allocation analysis for the Indiana Harbor Canal presented in the report "Supplemental Information for the Wasteload Allocation Analysis for the ArcelorMittal Indiana Harbor 2011 Draft Permits" dated August 19, 2011. The wasteload allocation included a multi-discharger model that was limited to the Indiana Harbor Canal/Lake George Canal/Indiana Harbor subwatershed. Pollutants selected for the multi-discharger model were based on water quality concerns and the application of technology-based effluent limitations at multiple outfalls. For ArcelorMittal West, water quality-based effluent limitations (WQBELs) for ammonia-N at Outfall 009, for lead and zinc at Outfalls 009 and 011 and for total residual chlorine at Outfalls 002, 009, 010 and 011 were developed as part of the multi-discharger model. The 2011 wasteload allocation (WLA) also included WQBELs for specific pollutants calculated on an individual outfall basis.

The 2011 WLA was developed using Indiana water quality regulations for discharges to waters within the Great Lakes system that include water quality criteria and methodologies for developing water quality criteria (327 IAC 2-1.5), procedures for calculating WLAs (327 IAC 5-2-11.4), making reasonable potential to exceed determinations (5-2-11.5) and developing WQBELs (5-2-11.6). These regulations are applicable to individual pollutants and to whole effluent toxicity (WET). These regulations are still applicable and were used in the current WLA analysis for the Indiana Harbor Canal presented in the report "Supplemental Information for the Wasteload Allocation Analysis for the ArcelorMittal Indiana Harbor 2016 Draft Permits" dated November 16, 2016. The application of WET requirements to ArcelorMittal is included in a later section.

The current subwatershed model for the Indiana Harbor Canal/Lake George Canal/Indiana Harbor included the ArcelorMittal West facility which has three active outfalls to the Indiana Harbor Canal, one

active outfall to the Indiana Harbor, and one water intake in the Indiana Harbor near the mouth of the Indiana Harbor Canal. The other major dischargers included in the subwatershed model are as follows in relation to the ArcelorMittal West facility: ArcelorMittal Indiana Harbor – Central Wastewater Treatment Plant (IN0063711) has one active outfall upstream to the Indiana Harbor Canal. This outfall is the first ArcelorMittal outfall in the subwatershed. ArcelorMittal USA – Indiana Harbor East (IN0000094) has three active outfalls to the Indiana Harbor. The discharges from these two facilities were taken into consideration in determining the need for and establishing WQBELs for the discharges from the ArcelorMittal West outfalls.

A review of the 2014 303(d) list shows that there is only one pollutant on the list that has the potential to impact wasteload allocation analyses conducted for the renewal of NPDES permits for dischargers in the Indiana Harbor Canal/Lake George Canal/Indiana Harbor subwatershed. The Indiana Harbor was first listed for free cyanide on the 2010 303(d) list. The listing was based on free cyanide data collected during the years 2000 and 2001 at IDEM fixed station IHC-0 in the Indiana Harbor. This station is located just upstream of ArcelorMittal West Outfall 011 and, due to the potential for reverse flows in the Indiana Harbor, could be impacted by the outfall. It is also located downstream of ArcelorMittal East Outfalls 011, 014 and 018. The aquatic life criteria for cyanide were changed from total cyanide to free cyanide in the 1997 Great Lakes rulemaking. It is IDEM current practice to monitor for total cyanide at fixed stations and analyze samples for free cyanide only when total cyanide data show a reportable concentration ($\geq$ 5 ug/l). After 2001, data collected at fixed station IHC-0 no longer showed any reportable values for total cyanide so free cyanide data have not been collected. ArcelorMittal West has also installed additional treatment and redirected cyanide containing process wastewater away from Outfall 011.

The Indiana Harbor Canal has not been included on the 303(d) list for free cyanide due to the two IDEM fixed stations in the Indiana Harbor Canal (located upstream of fixed station IHC-0 at Columbus Avenue (IHC-3S) and Dickey Road (IHC-2)) not showing impairment for free cyanide. There has not been a value for total cyanide above 5 ug/l reported at IHC-3S since February 2007 and at IHC-2 since January 2005. Prior to the 2011 permit renewal, total cyanide had been reported at many of the ArcelorMittal outfalls due to technology-based limits for this parameter, but little data for free cyanide was available. Therefore, in the 2011 permit renewal, monitoring was required for free cyanide at ArcelorMittal outfalls that have process wastewater for use in an assessment of reasonable potential.

A TMDL is not currently planned for the subwatershed, and, based on current IDEM monitoring data, may not be required. Therefore, as was done in the 2011 WLA, the procedures for calculating WLAs under 5-2-11.4 were used to develop preliminary WLAs and WLAs in the absence of a TMDL. Wasteload allocations in the absence of TMDLs are developed to establish water quality-based effluent limitations under 5-2-11.6 and preliminary wasteload allocations are developed to make reasonable potential determinations under 5-2-11.5. The reasonable potential procedures under 5-2-11.5 include provisions for making reasonable potential determinations using best professional judgment (5-2-11.5(a)) and using a statistical procedure (5-2-11.5(b)). The statistical procedure is a screening process in which a projected effluent quality (PEQ) based on effluent data is calculated and compared to a preliminary effluent limitation (PEL) based on the preliminary wasteload allocation. Both the best professional judgment and statistical procedures were used to establish the need for WQBELs to protect the designated uses of the Indiana Harbor Canal, Indiana Harbor, and Lake Michigan.

To develop WLAs and conduct reasonable potential to exceed analyses, IDEM utilized the following effluent data collected and submitted by ArcelorMittal for the West facility outfalls included in the

subwatershed model: data collected during the period December 2011 through June 2016 in accordance with the 2011 permit renewal and reported on monthly monitoring reports (MMRs); data for fluoride and cyanide collected from February 2015 through January 2016 as part of a special reporting requirement included in the 2011 permit renewal; data for ammonia-N collected in 1999 as part of the Grand Calumet River TMDL study and data for ammonia-N collected for the 2009 permit renewal application update; and, additional data collected for the 2016 permit renewal application. To develop WLAs, IDEM utilized the following sources of water quality data for the Indiana Harbor Canal and Indiana Harbor: IDEM fixed water quality monitoring station IHC-3S at Columbus Drive (Indiana Harbor Canal upstream of Lake George Canal and all ArcelorMittal outfalls); IDEM fixed station IHC-2 at Dickey Road (Indiana Harbor Canal); and, IDEM fixed station IHC-0 at the mouth of the Indiana Harbor. To develop WLAs, IDEM utilized the following sources of data for Lake Michigan: IDEM fixed station LM-H at the public water supply intake for the City of Hammond and IDEM fixed station LM-DSP at Dunes State Park. After a review of effluent and in-stream data, it was decided to conduct a multi-discharger WLA for ammonia-N, free cyanide, fluoride, lead, zinc and total residual chlorine. Other pollutants of concern, including mercury, were considered on an outfall by outfall basis.

In the 2011 multi-discharger model, the Indiana Harbor Canal was divided into sixteen complete mix segments and the Indiana Harbor into five complete mix segments. The Lake George Canal was incorporated as an input to the Indiana Harbor Canal. The intrusion of lake water was accounted for in the model by adding a portion of the total lake intrusion flow to the surface layer of each of nine affected segments in the Indiana Harbor and Indiana Harbor Canal. A total lake intrusion flow of 138 cfs was used based on a measurement made by the USGS in October 2002 during a normal lake level condition. The procedures in 5-2-11.4 require the more stringent of the FAV or the acute WLA calculated using up to a one-to-one dilution to be applied to individual outfalls. They also limit the dilution available for each outfall (the mixing zone) to twenty-five percent (25%) of the stream design flow. Because of the potential for overlapping mixing zones within a segment, the combined discharges in a segment were also limited collectively to twenty-five percent (25%) of the stream design flow. This was done in accordance with 5-2-11.4(b)(3)(D) which requires the combined effect of overlapping mixing zones to be evaluated to ensure that applicable criteria and values are met in the area where the mixing zones overlap.

Based on the reasonable potential statistical procedure at 5-2-11.5(b)(1)(iii) and (iv), the procedures under 5-2-11.4(c) are used as the basis for determining preliminary WLAs and the preliminary WLAs are then used to develop monthly and daily PELs in accordance with the procedure for converting WLAs into WQBELs under 5-2-11.6. Three critical inputs to the procedure under 5-2-11.4(c) include the background concentration, the effluent flow and the stream flow. The background concentration is determined under 5-2-11.4(a)(8). Under this rule, background concentrations can be determined using actual in-stream data or in-stream concentrations estimated using actual or projected pollutant loading data. In the multi-discharger WLA, in-stream data were used to establish the background concentration for the first segment of the model and then either actual or projected pollutant loading data were used. For pollutants not included in the multi-discharger WLA, in-stream data were used.

In the 2011 multi-discharger model, the flow assigned to each outfall was the long-term average flow using data from January 2006 through December 2007. This period was considered by ArcelorMittal to be the most representative of full operating conditions. Based on a review of flow data for the period January 2013 thru December 2015, it was determined that the flows used in the 2011 permit renewal are not representative of conditions expected during the term of the renewal permit. The termination of production at ArcelorMittal USA – Indiana Harbor Long Carbon (IN0063355) has resulted in the elimination of one significant discharge to the Indiana Harbor Canal. There has also been a significant

reduction in the discharge flows from ArcelorMittal West Outfall 009 and ArcelorMittal East Outfall 011. The flow assigned to each outfall for ArcelorMittal Central WWTP and ArcelorMittal West was the long-term average flow calculated using data from the period January 2013 through December 2014. This period represents production prior to the idling in 2015 of operations contributing flow to ArcelorMittal Central WWTP and ArcelorMittal West. The flow assigned to each outfall for ArcelorMittal East was the long-term average flow calculated using data from the period January 2014 through December 2015. This period represents production after the permanent shutdown of the Nos. 5 and 6 blast furnaces in June 2013.

The stream design flow used to develop wasteload allocations is determined under 5-2-11.4(b)(3). For the pollutants considered in this analysis, the aquatic life criteria are limiting and the stream design flow for chronic aquatic life criteria is the Q7,10. As was done in the 2011 WLA, since the Q7,10 is the appropriate flow for the water quality criteria being considered, the Q7,10 was used as the upstream flow for the Indiana Harbor Canal/Lake George Canal/Indiana Harbor WLA. Therefore, the stream design flow was set equal to the Q7,10 flow in the first segment of the multi-discharger model and then the long-term average flow of each discharger was added to become the stream design flow for downstream dischargers. The lake intrusion flow was added to the stream design flow at the end of each applicable segment. The Q7,10 was calculated using data from USGS gauging station 04092750 which is located in the Indiana Harbor Canal at Canal Street. The data used in the calculation consisted of continuous daily mean flow data approved by the USGS for the period 10-1-1994 through 3-31-2012. The Q7,10 based on the climatic year (April 1 through March 31) is 358 cfs.

At each applicable outfall, PELs were calculated for each pollutant of concern using an outfall specific spreadsheet that calculates PELs using the procedures under 5-2-11.4(c) to calculate WLAs and the procedures under 5-2-11.6 to convert WLAs into PELs. The spreadsheet considers all water quality criteria (acute and chronic aquatic life, human health and wildlife) and associated stream design flows and mixing zones. The stream design flow for each water quality criterion was set equal to the same value in the outfall specific spreadsheet. This value was the Q7,10 flow plus the accumulation of long-term average effluent flow and any lake intrusion flow, minus any intake flow. For mercury, which is a bioaccumulative chemical of concern (BCC), a mixing zone was not allowed in the development of PELs for any outfall in accordance with 5-2-11.4(b)(1). For those pollutants included in a multi-discharger WLA, the multi-discharger model was used to ensure that the most stringent water quality criterion is met at the edge of the mixing zone for each segment. This was the 4-day average chronic criterion. The multi-discharger model was also used to ensure that Lake Michigan criteria are met at the end of the last segment in the Indiana Harbor. The preliminary WLA was included as an input in the multi-discharger model and PELs were calculated from the preliminary WLA.

In the multi-discharger model, preliminary WLAs for each outfall were established, if possible, so that the monthly and daily PEQs did not exceed the PELs calculated from the preliminary WLAs. If TBELs were included for the parameter at a final outfall or an internal outfall, then the preliminary WLA was increased to the extent possible to allow the mass-based PELs to exceed the TBELs. The preliminary WLAs were adjusted as necessary so that the calculated PELs did not exceed the PELs calculated using the outfall specific spreadsheets and so that the water quality criterion was not exceeded at the edge of the mixing zone for each segment as determined using the multi-discharger model. For some outfalls, the discharge of one or more pollutants for which a multi-discharger WLA was conducted was not considered significant, so a preliminary WLA was established based on the reported effluent concentration, or if sufficient data were available, reported effluent loading data, but PELs were not calculated as allowed under 5-2-11.5(b)(1).

After assigning a preliminary WLA to each outfall in a segment and entering the WLA into the multi-discharger model, the model calculates the PELs for each outfall, the concentration at the edge of the mixing zone for the segment and the concentration at the end of each segment after complete mixing. The concentration after complete mixing then becomes the background concentration for the next segment. To calculate PELs using the outfall specific spreadsheets, the background concentration for each outfall was calculated assuming complete mixing between outfalls. This was done by entering the WLAs for each outfall into a separate spreadsheet that calculated the background concentration upstream of each outfall. By conducting a multi-discharger WLA in this manner, the background concentration for each outfall was based on the accumulated WLAs for the prior outfalls. Since the WLAs were based in some cases on projected effluent quality, the background concentrations were based on projected loading data. This provided a conservative means of determining the cumulative impact of the outfalls. For those pollutants not included in a multi-discharger WLA, the background concentration for each outfall was based on in-stream data.

The results of the reasonable potential statistical procedure are included in Tables 2 thru 5. The results show that the discharges from ArcelorMittal West Outfalls 009, 010 and 011 do not have a reasonable potential to exceed a water quality criterion for any of the pollutants considered in the reasonable potential analysis.

In addition to establishing WQBELs based on the reasonable potential statistical procedure, IDEM is also required to establish WQBELs under 5-2-11.5(a) "If the commissioner determines that a pollutant or pollutant parameter (either conventional, nonconventional, a toxic substance, or whole effluent toxicity (WET)) is or may be discharged into the Great Lakes system at a level that will cause, have the reasonable potential to cause, or contribute to an excursion above any applicable narrative criterion or numeric water quality criterion or value under 327 IAC 2-1.5". Chlorine is added to the intake water for zebra and quagga mussel control at concentrations exceeding water quality criteria. Outfalls 002, 009, 010 and 011 receive noncontact cooling water. Therefore, chlorine may be discharged from these outfalls at a level that will cause an excursion above the numeric water quality criterion for total residual chlorine under 2-1.5 and WQBELs for total residual chlorine are required at Outfalls 002, 009, 010 and 011.

For each pollutant receiving TBELs at an internal outfall, and for which water quality criteria or values exist or can be developed, concentration and corresponding mass-based WQBELs were calculated at the final outfall. The WQBELs were set equal to the applicable PELs from the multi-discharger model or the outfall specific spreadsheet. This was done for ArcelorMittal West Outfall 009 (ammonia-N, lead and zinc at Internal Outfall 509 and a 301(g) variance for ammonia-N at the final outfall), ArcelorMittal West Outfall 010 (301(g) variance for ammonia-N), ArcelorMittal West Outfall 011 (lead and zinc at Internal Outfalls 701 and 702 and a 301(g) variance for ammonia-N at the final outfall). The mass-based WQBELs at the final outfall were compared to the mass-based TBELs. Since the facility is authorized to discharge up to the mass-based TBELs, if the mass-based TBELs exceed the mass-based WQBELs at the final outfall, the pollutant may be discharged at a level that will cause an excursion above a numeric water quality criterion or value under 2-1.5 and WQBELs are required for the pollutant at the final outfall. This was not the case for any pollutant at Outfalls 009, 010 and 011.

Once a determination is made using the reasonable potential provisions under 5-2-11.5 that WQBELs must be included in the permit, the WQBELs are calculated in accordance with 5-2-11.5(d). Under this provision, in the absence of an EPA-approved TMDL, WLAs are calculated for the protection of acute and chronic aquatic life, wildlife, and human health in accordance with the WLA provisions under 5-2-

11.4. The WLAs are then converted into WQBELs in accordance with the WQBEL provisions under 5-2-11.6. The WQBELs are included in Table 7 and were set equal to the PELs calculated for each pollutant.

In addition to the outfalls on the Indiana Harbor Canal and Indiana Harbor, ArcelorMittal West Outfall 012 discharges to the forebay of the No. 3 water intake. The No. 3 intake is located on the channel that runs along the west side of the Indiana Harbor breakwall from Lake Michigan, past the No. 3 intake, and to the Indiana Harbor West No. 2 water intake. As noted above, IDEM is treating the channel as a tributary within the Lake Michigan drainage basin. The discharge from Outfall 012 consists of flow from the North Lagoon. In the 2011 permit, the North Lagoon was permitted to receive treated wastewater from Internal Outfalls 111 (84-inch hot strip mill) and 211 (No. 3 cold mill and hot strip mill oily waste sumps), noncontact cooling water and storm water. For this permit renewal, only stormwater and groundwater will be included as sources. Therefore, a wasteload allocation was not conducted for Outfall 012.

Whole Effluent Toxicity Testing Requirements

The 1997 Indiana Great Lakes regulations included narrative criteria with numeric interpretations for acute (2-1.5-8(b)(1)(E)(ii)) and chronic (2-1.5-8(b)(2)(A)(iv)) whole effluent toxicity (WET) and a procedure for conducting reasonable potential for WET (5-2-11.5(c)(1)). U.S. EPA did not approve the reasonable potential procedure for WET so Indiana is now required by 40 CFR Part 132.6(c) to use the reasonable potential procedure in Paragraphs C.1 and D of Procedure 6 in Appendix F of 40 CFR Part 132. IDEM used this procedure in conducting the reasonable potential analysis for WET except that the equation was rearranged so that it is similar to the equation that IDEM uses for other pollutants and pollutant parameters.

The renewal permit issued October 26, 2011 for ArcelorMittal West required monthly chronic toxicity testing for three months at Outfalls 009 and 011 for *Ceriodaphnia dubia* and Fathead Minnow. Thereafter, testing was required quarterly for the most sensitive species. The permit modification issued November 26, 2014 reduced the testing frequency to once per year and only required testing for *Ceriodaphnia dubia*. The representative dataset for the reasonable potential analysis was considered to begin with the first test under the 2011 permit conducted in February 2012. The results of the reasonable potential analysis are shown in Table 6. The results show that the discharges from Outfalls 009 and 011 do not have a reasonable potential to exceed the numeric interpretation of the narrative criterion for acute or chronic WET.

The permittee will be required to conduct whole effluent toxicity testing of its effluent discharge from Outfalls 009 and 011 using *Ceriodaphnia dubia*. The terms and conditions of the WET testing are contained in Part I.F. of the NPDES permit. Part I.F.1.c.(2) of the permit states that chemical analysis must accompany each effluent sample taken for bioassay test. The analysis detailed under Part I.A should be conducted for each effluent sample. The effluent should be sampled using the sample type requirements specified in Part I.A. Questions regarding the WET testing procedures should be addressed to the Office of Water Quality, NPDES Permits Branch.

Chronic toxicity testing is required at Outfalls 009 and 011. Acute toxicity is to be derived from chronic toxicity tests and toxicity is to be reported in terms of acute and chronic toxic units and compared to calculated TRE triggers. The TRE triggers are set equal to the acute and chronic WLAs for WET in accordance with 327 IAC 5-2-11.6(d). If either an acute or chronic TRE trigger is exceeded, another

chronic WET test must be conducted within two weeks. If the results of any two consecutive tests exceed the applicable TRE trigger, ArcelorMittal must conduct a TRE. The TRE triggers are shown in Table 7.

Thermal Requirements

The Indiana Harbor Canal and Indiana Harbor shall be capable of supporting a well-balanced, warm water aquatic community. The water quality criteria for temperature applicable to these waterbodies are included in 327 IAC 2-1.5-8(c). Indiana regulations state that the temperature criteria apply outside a mixing zone, but the allowable mixing zone is not established in the rules. IDEM current practice is to allow fifty percent (50%) of the stream flow for mixing to meet temperature criteria. The implementation procedures under 327 IAC 5-2-11.4 for developing wasteload allocations for point source discharges address temperature under 5-2-11.4(d)(3). This provision states that temperature shall be addressed using a model, approved by the commissioner, that ensures compliance with the water quality criteria for temperature.

There is also no specific procedure in the rules for determining whether a discharger is required to have water quality-based effluent limits (WQBELs) for temperature. Therefore, the general provision for making reasonable potential determinations in 5-2-11.5(a) is applicable. This provision establishes that if the commissioner determines that a pollutant or pollutant parameter is or may be discharged into the Great Lakes system at a level that will cause, have the reasonable potential to cause, or contribute to an excursion above any applicable narrative or numeric water quality criterion under 2-1.5, the commissioner shall incorporate WQBELs in an NPDES permit that will ensure compliance with the criterion. In making this determination, the commissioner shall exercise best professional judgment, taking into account the source and nature of the discharge, existing controls on point and nonpoint sources of pollution, the variability of the pollutant or pollutant parameter in the effluent, and, where appropriate, the dilution of the effluent in the receiving water. The commissioner shall use any valid, relevant, representative information pertaining to the discharge of the pollutant.

The multi-discharger model for the Indiana Harbor Canal/Lake George Canal/Indiana Harbor subwatershed discussed above included four active outfalls discharging to the Indiana Harbor Canal and four active outfalls discharging to the Indiana Harbor that contain a thermal component such as noncontact cooling water or boiler blowdown as a source of wastewater. ArcelorMittal West Outfall 002 has a flow of 12.2 mgd consisting mostly of noncontact cooling water; Outfall 009 has a flow of 31.8 mgd with Internal Outfall 509 having a flow of 0.8 mgd and the remaining consisting mostly of noncontact cooling water; Outfall 010 has a flow of 38.1 mgd consisting mostly of noncontact cooling water; and, Outfall 011 has a flow of 22.1 mgd with Internal Outfalls 701 and 702 having combined intermittent flows of less than 0.5 mgd and the remaining consisting mostly of noncontact cooling water. The ArcelorMittal West 2011 permit includes temperature monitoring for Outfalls 002, 009, 010 and 011 on the intake and outfall at a frequency of 2 times per week. The main source of cooling water for ArcelorMittal West Outfall 002 during the term of the permit was the No. 2 intake at the end of the Lake Michigan intake channel. The main source of cooling water for Outfalls 009, 010 and 011 was the No. 1 intake at the mouth of the Indiana Harbor Canal. For the term of the renewal permit, the No. 2 intake is expected to be the main source for all outfalls. The data for Outfall 002 follow a seasonal pattern with a maximum recorded temperature of 98.5 °F in August 2012. The data for Outfall 009 follow a seasonal pattern, but with relatively higher temperatures than the other ArcelorMittal West outfalls, with a maximum recorded temperature of 105.6 °F in July 2013. The data for Outfall 010 follow a seasonal

pattern with a maximum recorded temperature of 99.2 °F in July 2013. The data for Outfall 011 follow a seasonal pattern with a maximum recorded temperature of 93.6 °F in July 2012.

The multi-discharger model accounted for the intrusion of lake water into the Indiana Harbor and Indiana Harbor Canal. The intrusion of lake water produces thermal stratification that ends at the railroad bridge about 0.7 miles upstream of the mouth of the Indiana Harbor Canal. The outfalls that discharge upstream of the railroad bridge are ArcelorMittal Central WWTP Outfall 001 and ArcelorMittal West Outfall 002 on the west side of the canal. ArcelorMittal West Outfalls 009 and 010, which are two large sources of non-contact cooling water, are the first two discharges downstream of the railroad bridge and are also on the west side of the canal. A review of historical instream temperature data at IDEM fixed stations on the Indiana Harbor Canal and Indiana Harbor from January 1990 through December 2015 and IDEM fixed station LM-DSP on Lake Michigan at Dunes State Park from January 1997 through December 2015 shows that the maximum temperature values were recorded in July 1999 and July 2012. The average stream flow during the July 1999 and July 2012 temperature monitoring as recorded at USGS gaging station 04092750 in the Indiana Harbor Canal at Canal Street was 485 cfs in July 1999 and 521 cfs in July 2012 which are greater than the Q7,10 of 358 cfs, but less than the harmonic mean flow of 548 cfs.

In addition to the instream sampling, a multi-discharger model was used to assist in the reasonable potential analysis. The multi-discharger model for toxics discussed above was modified to account for temperature. The mixing zone was set at fifty percent (50%) of the stream flow to be consistent with current IDEM practice for mixing zones for temperature. The model does not account for heat dissipation so it represents a conservative, dilution only analysis. A Q7,10 flow of 358 cfs, long-term average effluent flows and background temperatures from fixed station IHC-3S were used in the multi-discharger thermal model as were used in the multi-discharger toxics model. The effluent temperature input to the model was set equal to the maximum temperature reported for the month during the period of representative data collection. For the ArcelorMittal Central WWTP outfall and ArcelorMittal West outfalls, this period was January 2012 through December 2015 since temperature monitoring was reinstated in their 2011 permits. For ArcelorMittal East Outfall 011, the representative period was also January 2012 through December 2015. For ArcelorMittal East Outfall 014, the period was January 1998 through December 2015 and for ArcelorMittal East Outfall 018 the period was June 1999 through December 2015 if it was considered representative data. The critical peak temperature months of June through September were included as one period since the same maximum criterion of 90°F applies each month.

The results the conservative, dilution only modeling show that the discharges from ArcelorMittal West Outfalls 002, 009, 010 and 011 do not have a reasonable potential to cause or contribute to an excursion of the water quality criterion for temperature in the Indiana Harbor Canal or Indiana Harbor from January through December. Based on the results of the instream sampling and multi-discharger thermal model, the discharges from ArcelorMittal West Outfalls 002, 009, 010 and 011 do not have a reasonable potential to exceed a water quality criterion for temperature. Under 5-2-11.5(e), the commissioner may require monitoring for a pollutant of concern even if it is determined that a WQBEL is not required based on a reasonable potential determination. Monitoring for temperature was continued in the renewal permit.