INDIANA DEPARTMENT OF TRANSPORTATION

100 North Senate Avenue
Room N758 CM
Indianapolis, Indiana 46204

PHONE: (317) 232-5502
www.in.gov/indot

Eric Holcomb, Governor
Joe McGuinness, Commissioner

AGENDA

February 18, 2021 Standards Committee Meeting

MEMORANDUM

February 2, 2021

TO: Standards Committee

FROM: Scott Trammell, Secretary

RE: Agenda for the February 18, 2021 Standards Committee Meeting

A Standards Committee meeting is scheduled for 09:00 a.m. on February 18, 2021 will be held virtually via *Teams* (Microsoft application). Please contact Scott Trammell (strammell@indot.in.gov) for instructions on how to join this event.

The following items are listed for consideration:

A. GENERAL BUSINESS ITEMS

OLD BUSINESS

(No items on this agenda)

NEW BUSINESS

1. *Approval of the Minutes from the January 21, 2021 meeting*

B. CONCEPTUAL PROPOSAL ITEMS

OLD BUSINESS

(No items on this agenda)

NEW BUSINESS

AGENDA

1. Preparation of the 2022 Standard Specifications for publishing ...(K. Pelz)..... pg 4

C. STANDARD SPECIFICATIONS, SPECIAL PROVISIONS AND STANDARD DRAWINGS PROPOSED ITEMS

OLD BUSINESS

Item No. 1 (from 11/19/20 and 12/17/20) Mr. Reilman pg 16
2020 Standard Specifications:
109.05.1*(g)* *Mandrel Testing of Pipe*
715.08 ~~Blank~~*Backfilling*
715.09 ~~Backfilling~~*Quality Adjustments*
715.14 Basis of Payment

Item No. 2 (from 11/19/20 and 12/17/20) Mr. Reilman pg 24
2020 Standard Specifications:
SECTION 218 *QC/QA SOIL EMBANKMENT AND QC/QA SUBGRADE* (Proposed new section)

NEW BUSINESS

Item No. 1 (2020 SS) Mr. Reilman pg 30
2020 Standard Specifications:
109.05.1 Quality Adjustments
502.23 Basis of Payment

Item No. 2 (2020 SS) Mr. Reilman pg 35
2020 Standard Specifications:
731.02 General Design Requirements

Item No. 3 (2020 SS) Mr. Orton pg 39
2020 Standard Specifications:
601.07 Guardrail End Treatments
601.08 Impact Attenuators
801.10.1 Construction Zone Energy Absorbing Terminal, CZ

Item No. 4 (2020 SS) Mr. Boruff pg 45
2020 Standard Specifications:
SECTION 807 HIGHWAY ILLUMINATION *(various)*

AGENDA

SECTION 920	HIGHWAY ILLUMINATION MATERIALS (*various*)
922.17	Handholes

Item No. 5 (2020 SS) Mr. Boruff pg 80

2020 Standard Specifications:

801.16(b)	Maintenance of Traffic for Mobile Operations

Standard Drawings:

E 801-TCTC series	(*see* proposal)
E 801-TCMO series	(*see* proposal)
E 801-TCFO series	(*see* proposal)

Item No. 6 (2020 SS) Mr. Boruff pg 104

Recurring Special Provision:

801-T 209	TEMPORARY PORTABLE RUMBLE STRIPS

Recurring Plan Details:

801-T-209d	TEMPORARY PORTABLE RUMBLE STRIP INSTALLATION

Item No. 7 (2020 SS) Mr. Pelz pg 114

Recurring Special Provision:

205-R-706	STORMWATER MANAGEMENT

cc: Committee Members
FHWA
ICI

AGENDA

CONCEPTUAL PROPOSAL TO STANDARDS COMMITTEE

PROBLEM(S) ENCOUNTERED: Standard Specifications have been in circulation since 1934 and regularly updated by adding or revising existing statements, work procedures, materials, methods, etc. During a review of the current edition of the INDOT's Standard Specifications, it has been found that some statements are not clearly formulated, or their written intentions are hard to follow. In addition, inconsistencies in use of units or grammatical errors (for example, "gage" instead of "gauge", "contact unit price" instead of "contract unit price"), absent commas in clearly listed items, were noted.

PROPOSED SOLUTION (conceptual): Continue to review of all Divisions (100 thru 900) of the 2022 (draft) Standard Specifications and to make editorial (grammar) corrections as found necessary. Inform offices on questionable or outdated information and seek any necessary corrective action. Proposed revisions to statements from various sections were made with this concept in mind and are shown here for your review.

APPLICABLE STANDARD SPECIFICATIONS: 2020 Standard Specifications and approved RSPs

APPLICABLE STANDARD DRAWINGS: n/a

APPLICABLE DESIGN MANUAL SECTION: n/a

APPLICABLE SECTION OF GIFE: n/a

APPLICABLE RECURRING SPECIAL PROVISIONS: entire library of RSPs (September 1, 2021 Edition)

PAY ITEMS AFFECTED: n/a

APPLICABLE SUB-COMMITTEE ENDORSEMENT: ad-hoc Specification's review group: Kurt Pelz, Scott Trammell, Lana Podorvanova

IMPACT ANALYSIS (attach report): n/a

Submitted By: Kurt Pelz

Title: Construction Management Technical Support
Organization: INDOT
Phone Number: 317-691-4800

Date: 2/2/2021

AGENDA

DIVISION 100 – GENERAL PROVISIONS

The Standard Specifications are revised as follows:

SECTION 101, BEGIN LINE 294, INSERT AS FOLLOWS:

101.27 Invitation for Bids

The advertisement for proposals for all work or materials on which bids are required. Such advertisement will indicate with reasonable accuracy the quantity and location of the work to be done or the character and quantity of the material to be furnished, and the time and place of the opening of proposals.

SECTION 102, BEGIN LINE 9, DELETE AND INSERT AS FOLLOWS:

If apparent errors, discrepancies, or unclear statements are found in the contract documents prior to letting, the ~~District Construction Engineer for the district shown on the Proposal sheet~~*Department* shall be contacted ~~by telephone or fax~~.

SECTION 104, BEGIN LINE 478, DELETE AND INSERT AS FOLLOWS:

5. ~~The Contractor shall have tested those areas so directed by the Department, and shall test for the materials and products so directed by the Department.~~*The Contractor shall test those areas for materials and products as directed by the Department.*

SECTION 104, BEGIN LINE 527, DELETE AND INSERT AS FOLLOWS:

b. ~~The Department will have provided written notice to the Contractor which specifies that such hazardous condition and such affected area is, or has been, rendered safe for the resumption of work, or which specifies conditions under which work may be safely resumed~~*The Department will provide written notice to the Contractor specifying the hazardous conditions and that the affected area is, or has been, rendered safe for the resumption of work, or specifying the conditions under which work may safely be resumed.*

SECTION 105, BEGIN LINE 3, DELETE AND INSERT AS FOLLOWS:

105.01 Authority of the Engineer

The Engineer will decide all questions which may arise as to the quality and acceptability of materials furnished and work performed and as to the rate of progress of the work~~;~~, which may arise as to the interpretation of the plans and specifications~~;~~, and as to the acceptable fulfillment of the contract on the part of the Contractor.

SECTION 105, BEGIN LINE 86, DELETE AND INSERT AS FOLLOWS:

If the Engineer finds the materials or the finished product in which the materials ~~are~~ used are not within reasonably close conformance with the plans and specifications but that reasonably acceptable work has been produced, the Engineer will determine if the work will be accepted and remain in place. In this event, the basis of acceptance will be documented ~~by contract modification~~

~~which will provide for~~ an appropriate adjustment in the contract price for such work or materials as deemed necessary to conform to the determination based on engineering judgment.

SECTION 107, BEGIN LINE 68, INSERT AS FOLLOWS:

(c) The failure of the Contractor to comply in good faith with the terms of (a) above, or falsifying or otherwise violating the terms of the certification referenced in (b) above, shall constitute a material breach of the contract. Such failure shall entitle the Department to impose sanctions against the Contractor including, but not limited to, suspension of contract payments, termination of the contract, or debarment of the Contractor from doing further work for the Department for up to three years.

SECTION 111, BEGIN LINE 51, DELETE AND INSERT AS FOLLOWS:

111.05 Granular Base, Subbase Materials, and Aggregates for HMA and Concrete Pavements

Partial payment made under the requirement of this paragraph will be made upon presentation of paid invoices or certified copies of the cost for the production of such materials. The partial payment ~~shall~~*will* not exceed 30% of the unit price bid for the base or subbase material item as set out in the Schedule of Pay Items. The invoice or certified copies of the cost shall include an estimated quantity of the materials stored for partial payment. The estimated quantity of materials will be verified before payment.

SECTION 111, BEGIN LINE 69, DELETE AND INSERT AS FOLLOWS:

Testing shall be provided as directed, during production. Prior to authorizing partial payment, verification ~~will be obtained~~*shall be provided* that the materials have been tested and are acceptable.

111.06 Bridge Expansion Joints

(a) Type SS

Partial payment will be the delivered cost of the expansion joint SS, as verified by invoices, except it will not exceed 75% of the contract unit price for expansion joint SS. Prior to authorizing partial payment, verification ~~will be obtained~~*shall be provided* that all required inspections have been made and the joint is acceptable.

(b) Type M

Partial payment will be the delivered cost of the expansion joint M, as verified by invoices, except it will not exceed 75% of the contract unit price for expansion joint M. Prior to authorizing partial payment, verification ~~will be obtained~~*shall be provided* that all required inspections have been made and the joint is acceptable.

111.07 Structural Supports for Signals, Signs, and Luminaires

Partial payment will be the delivered cost of the materials, as verified by the invoices, except it will not exceed 50% of the contract unit price for the structural support which is stored

AGENDA

within the project limits or at an approved storage facility adjacent to the project site. Prior to authorizing partial payment, verification ~~will be obtained~~*shall be provided* that the material has been tested and is acceptable.

SECTION 111, BEGIN LINE 102, DELETE AND INSERT AS FOLLOWS:

111.09 Concrete Face Panels and Ground Reinforcement for MSE Walls

Partial payment for concrete face panels and ground reinforcement for MSE walls as stockpiled material will be the delivered cost of the concrete face panels and ground reinforcement, including freight, as verified by invoices furnished by the Contractor. Partial payment will not exceed 75% of the contract unit price for concrete face panels. Concrete face panels and ground reinforcement shall be stored within the project limits or at an approved storage location. Prior to authorizing partial payment, verification ~~will be obtained~~*shall be provided* that the concrete face panels are in accordance with 901.10 and the ground reinforcement is in accordance with 910.07(b).

DIVISION 200 – EARTHWORK

The Standard Specifications are revised as follows:

SECTION 201, BEGIN LINE 3, DELETE AND INSERT AS FOLLOWS:

201.01 Description

~~This work shall consist of clearing, grubbing, removing, and disposing of all vegetation and debris, except such objects as are designated to remain or are to be removed in accordance with other sections of these specifications, within the construction limits shown on the plans~~*This work shall consist of clearing, grubbing, removing, and disposing of all vegetation and debris within the construction limits shown on the plans, except such objects that are designated to remain or are to be removed in accordance with other sections of these specifications.* If no construction limits are shown, the right-of-way and easement areas will be the construction limits. This work shall include the preservation from injury or defacement of all vegetation and objects designated to remain. Disposal of material shall be in accordance with 203.08.

SECTION 202, BEGIN LINE 22, DELETE AND INSERT AS FOLLOWS:

Materials not designated by the Department as salvageable and removed from the construction site shall become the property of the Contractor and shall be disposed of in accordance with 203.08~~, except for regulated materials, which shall be disposed of in accordance with 104.06, and bridge painting debris which is subject to 619~~*Regulated materials shall be disposed of in accordance with 104.06. Bridge painting debris shall be disposed of in accordance with 619*.

SECTION 202, BEGIN LINE 22, DELETE AND INSERT AS FOLLOWS:

When a reinforced concrete arch bridge is to be removed, either in whole or in part, the work shall include the removal of miscellaneous items within the limits of the structure~~, which must be removed prior to or in conjunction with the removal of the structure~~. *The items shall be removed prior to or in conjunction with the removal of the structure.* These miscellaneous items

AGENDA

shall include but shall not be limited to~~:~~ concrete and asphalt pavements~~;~~, concrete and asphalt sidewalks~~;~~, and fill within the arches regardless of content.

SECTION 202, BEGIN LINE 22, DELETE AND INSERT AS FOLLOWS:

(b) ~~unless the Department has already done so, provide notification of tank removal operations to appropriate authorities.~~ *provide notification of tank removal operations to appropriate authorities, unless the Department has already done so.* Notification shall be provided as required to ~~the~~ IDEM, *the* Office of the State Fire Marshall, and *the* local fire department in accordance with (a) through (i) above. Notification shall be provided to IDEM at least 30 days prior to closure or removal of regulated tanks in the form of the completed Notification for Underground Storage Tanks Form, and at least 14 days prior to removal or closure to the State Fire Marshall and the local fire department. At least 14 days prior notice~~, by telephone,~~ shall be given to the IDEM Underground Storage Tank Branch of intended closure or removal date. Such forms are available from ~~the Indiana Department of Environmental Management~~*IDEM*;

SECTION 202, BEGIN LINE 359, DELETE AND INSERT AS FOLLOWS:

(h) ~~submit a site operation plan for the contaminated area to the Engineer for review and approval before beginning removal operations~~*submit a site operation plan for the contaminated area for review and obtain approval from the Engineer before beginning removal operations;*

SECTION 203, BEGIN LINE 1082, DELETE AND INSERT AS FOLLOWS:

The moisture content shall be controlled within -2 and +2 percentage points of the optimum moisture content determined in accordance with AASHTO T99. Compaction will be determined by DCP testing in accordance with ITM 509. The DCP criteria for compaction acceptance ~~shall~~ *will* be as follows:

1. A minimum blow count of 7 for a 6 in. compacted lift for fly ash.
2. A minimum blow count of 16 for a 12 in. compacted depth of bottom ash consisting of two compacted 6 in. lifts.

SECTION 203, BEGIN LINE 1156, DELETE AND INSERT AS FOLLOWS:

2. If particles larger than those that can pass through a No. 4 (4.75 mm) sieve for soil and a 3/4 in. (19 mm) sieve for granular material are encountered, corrections shall be made so that the density obtained is for the minus No. 4 (4.75 mm) or 3/4 in. (19 mm) only. After the densities are determined, the ~~degree~~*percent* of compaction ~~shall~~*will* be computed by the following formula:

$$\text{Percent Compaction} = \frac{\text{In Place Density, pcf}}{\text{Maximum Density, pcf}} \text{ x } 100$$

SECTION 204, BEGIN LINE 70, DELETE AND INSERT AS FOLLOWS:

Settlement stakes will be used to measure the vertical movement, in conjunction with settlement plates if specified. Settlement stakes and settlement plates will be monitored at the same time and interval. Measurements will be made to the nearest 1/4 in. ~~Settlement data will be sent electronically to the Department's Geotechnical Division within one day of the readings for approval~~*Within one day of the readings, settlement data will be sent electronically to the Department's Geotechnical Division and will be subject to approval*.

SECTION 204, BEGIN LINE 133, DELETE AND INSERT AS FOLLOWS:

If the piezometer location is not in an area of proposed fill, ~~a~~ *an approximately 3 ft long* protective metal cover~~, about 3 ft long~~ shall be installed at the top with ~~about~~*approximately* 2 ft below the surface and 12 in. above the surface. A *12 in. diameter by* 6 in. *thick* circular pad of ~~course~~*coarse* aggregate;~~, 6 in. thick~~ shall be filled around the cover. A lockable cap shall be securely attached onto the protective metal cover.

SECTION 204, BEGIN LINE 144, DELETE AND INSERT AS FOLLOWS:

The casing and standpipe shall be extended as the fill is placed, by adding extra lengths not to exceed 5 ft. The top of the standpipe shall be at least 12 in. above the grade of the new fill. Each time the casing and standpipe are extended, the casing shall be filled with structure backfill. The last extension of pipe shall be of such length that it extends 12 in. above grade. It shall be filled with structure backfill to within 9 in. of the top of the casing. A *12 in. diameter by* 6 in. *thick* circular pad of coarse aggregate~~, 6 in. thick~~ shall be filled around the pipes. A lockable cap shall be securely attached onto the protective cover.

SECTION 204, BEGIN LINE 221, DELETE AND INSERT AS FOLLOWS:

pavement or removed separately. Integral curb that is removed with the adjacent pavement ~~shall~~*will* be paid for as pavement removal.

DIVISION 300 – AGGREGATE PAVEMENT AND BASES

The Standard Specifications are revised as follows:

SECTION 302, BEGIN LINE 7, INSERT AS FOLLOWS:

Subbase for PCCP shall consist of 3 in. *layer* of coarse aggregate No. 8 as the aggregate drainage layer placed over a 6 in. *layer of* coarse aggregate No. 53 as the separation layer. Dense graded subbase shall consist of a 6 in. *layer of* coarse aggregate No. 53.

SECTION 306, BEGIN LINE 207, DELETE AND INSERT AS FOLLOWS:

The transverse vertical cut face for commercial or public road approaches shall be transitioned at a rate of 24:1 or as ~~approved~~*directed*.

AGENDA ITEM

SECTION 307, BEGIN LINE 184, DELETE AS FOLLOWS:

When a paving fabric is encountered during the pulverization operation, the Contractor shall make the necessary changes in equipment or operations so that incorporation of shredded fabric into the RBC does not affect the performance parameters or inhibit placement or compaction of the RBC. The Contractor shall ~~be required to~~ remove and properly dispose of oversized pieces of paving fabric. The Contractor shall make the necessary adjustments in equipment or operations so that the shredded fabric in the recycled material is no more than 5 sq in. No fabric piece shall have a dimension exceeding a length of 4 in.

Rubberized crack filler, durable pavement markings, loop wires, and other non-pavement materials shall be removed ~~as observed~~ from the roadway during the pulverization process. Residual materials that cannot be completely removed may be incorporated into the mixture if the Contractor can demonstrate that those added materials will not adversely affect performance.

SECTION 307, BEGIN LINE 225, DELETE AND INSERT AS FOLLOWS:

307.11 Control Strip and Compaction

A minimum 500 ft long control strip shall be ~~conducted~~*constructed* on the first day of production to verify the construction process meets the requirements as specified. The control strip shall allow the Contractor to:

DIVISION 400 – ASPHALT PAVEMENTS

The Standard Specifications are revised as follows:

SECTION 402, BEGIN LINE 350, DELETE AND INSERT AS FOLLOWS:

402.20 Basis of Payment

The accepted quantities for this work will be paid for at the contract unit price per ton for HMA, of the type specified complete in place.

HMA *transverse* rumble strips will be paid for at the contract unit price per linear foot, ~~of each transverse strip~~ complete in place.

SECTION 409, BEGIN LINE 112, DELETE AND INSERT AS FOLLOWS:

4. Vibratory Roller

A vibratory roller ~~is a roller that has~~*shall have* both drums equipped for vertical impact forces, a variable amplitude system, a speed control device, and have a minimum vibration frequency of 2,000 vibrations per minute. A reed tachometer shall be provided for verifying the frequency of vibrations.

5. Oscillatory Roller

An oscillatory roller ~~is a roller that has~~*shall have* both drums equipped for horizontal and vertical shear forces or one drum equipped for horizontal and vertical shear force and the other drum equipped for a vertical impact force.

AGENDA

SECTION 411, BEGIN LINE 230, DELETE AND INSERT AS FOLLOWS:

411.13 Department Maintenance

The Department may perform routine maintenance operations during the warranty period including, but not limited to, plowing, applying de-icing chemicals, repairs to safety appurtenances, pavement markings, mowing and sign maintenance. ~~The Department, during the warranty period, will perform no routine pavement surface maintenance activities.~~*The Department will perform no routine pavement surface maintenance activities during the warranty period.*

SECTION 414, BEGIN LINE 284, DELETE AND INSERT AS FOLLOWS:

414.18 Department Maintenance

The Department may perform routine maintenance operations during the warranty period including, but not limited to, plowing, applying de-icing chemicals, repairs to safety appurtenances, pavement markings, mowing and sign maintenance. ~~The Department, during the warranty period, will perform no routine pavement surface maintenance activities.~~*The Department will perform no routine pavement surface maintenance activities during the warranty period.*

DIVISION 500 – CONCRETE PAVEMENT

(Review has been completed. Made grammatical and errors corrections only.)

DIVISION 600 – INCIDENTAL CONSTRUCTION

The Standard Specifications are revised as follows:

SECTION 622, BEGIN LINE 111, DELETE AND INSERT AS FOLLOWS:

The initial planting and spring replacements, in accordance with 622.18, shall be completed satisfactorily within the planting season which expires prior to the completion date of the contract. ~~These plants shall have an establishment period which~~*The establishment period for these plants* shall be from the end of the specified planting period to the fall inspection. If the initial planting and spring replacements are not completed within the specified time, the completion date may be extended one year to provide an establishment period. If the completion date is extended, all requirements of 622.18 shall apply until final inspection and acceptance.

SECTION 622, BEGIN LINE 164, DELETE AND INSERT AS FOLLOWS:

In addition to the water applied at the time of planting, unless excessive moisture prevails, ~~the minimum supplemental waterings required shall be two~~ *a minimum of two supplemental waterings shall be applied* between May 1 and June 15, and one every 14 days between June 15 and September 15. Sufficient water shall be applied to individual plants to saturate the backfill and the mulch area. Plants in beds shall receive water equivalent to the quantity used for individual

AGENDA

plants. Liquid fertilizer, in accordance with 622.09, may be applied with the supplemental watering and the method of application shall be approved. Lance watering will not be allowed.

DIVISION 700 – STRUCTURES

The Standard Specifications are revised as follows:

SECTION 701, BEGIN LINE 187, DELETE AND INSERT AS FOLLOWS:

4. Hydraulic Hammers

~~The power plant furnished for hydraulic hammers shall have sufficient capacity to maintain at the hammer, under working conditions, the volume and pressure specified by the manufacturer of the hammer~~*Under working conditions, the power plant shall have sufficient capacity to maintain the volume and pressure for the hydraulic hammer as specified by the manufacturer.* Hydraulic hammers shall also be equipped with a controlled variable stroke system and a readout device to measure ram energy. The plant and equipment shall be equipped with accurate pressure and velocity gauges and an energy readout device which are easily accessible to the Engineer.

SECTION 702, BEGIN LINE 129, DELETE AND INSERT AS FOLLOWS:

The manufacturer's data, which relates recommended addition rates to ambient temperatures, shall be furnished. The proposed addition rates and adjustments to the rates, as conditions require, will be *reviewed for* approv*al*~~ed~~ using this data and the anticipated temperature. The addition rate shall not be reduced below the minimum rate recommended by the manufacturer, regardless of the concrete or air temperature. The air entraining admixture and water-reducing retarding admixture shall be added to the batch separately. The method and equipment for adding water-reducing retarding admixture ~~will~~*shall* be *as* approved.

SECTION 702, BEGIN LINE 310, DELETE AND INSERT AS FOLLOWS:

Before a pour is started, the number of trucks to be assigned to the work, the rate of production, and all other conditions necessary for furnishing satisfactory concrete shall be subject to approval. Such assigned equipment shall be in satisfactory operating condition prior to the start of the pour. ~~Equipment once assigned to a pour shall not be diverted for another purpose without approval~~*Once assigned to a pour, equipment shall not be diverted for another purpose without approval.*

SECTION 702, BEGIN LINE 695, DELETE AND INSERT AS FOLLOWS:

The amount of sounding and form removal may be moderated as directed after a substantial amount of slab has been constructed and inspected, if the methods of construction and the results of the inspections as outlined above indicate that sound concrete is being obtained throughout the slabs. ~~All facilities shall be provided as are required for the safe and convenient conduct of inspection procedures~~*All necessary facilities shall be provided for the safe and convenient performance of inspection procedures.*

SECTION 703, BEGIN LINE 162, DELETE AS FOLLOWS:

If WWR is required, the cost of furnishing and placing ~~it~~ shall be included in the cost of the concrete in which it is placed.

SECTION 707, BEGIN LINE 237, DELETE AND INSERT AS FOLLOWS:

Inspection of the precast prestressed structural member during manufacture and checking and testing aggregates, cement, concrete, and steel specimens shall be performed. All specimens shall be furnished without cost to the Department. Inspection, checking, and testing performed by the Department will not relieve the Contractor or the fabricator from performing their own quality control inspection, testing, and checking as necessary to maintain quality control over the manufacturing, handling, and curing procedure. A permanent record of the force applied to and measured elongation obtained for each prestressing strand ~~and the identification of the strand and structural member to which the record applies~~ shall be provided. *The record shall also identify the strand and structural member to which the record applies.* ~~This~~*The accuracy of this* record shall be certified *by the fabricator's production supervisor* that it accurately represents the force applied and measured elongation. ~~by the fabricator's production supervisor and~~*The certified record shall be* provided to the Engineer prior to shipment.

SECTION 719, BEGIN LINE 35, INSERT AS FOLLOWS:

If a firm foundation is not encountered at the required trench bottom grade, the unstable material shall be removed to such depth that provides ample support after being backfilled, compacted, and shaped to the required elevation or the drain tile shall be laid on *composite* planking which is not less than 1 in. thick, 10 in. wide, and 10 ft long.

SECTION 719, BEGIN LINE 49, INSERT AS FOLLOWS:

719.04 Laying Tile

Tile shall not be laid on a frozen or muddy trench bottom. It shall be laid true to line and grade, starting at the outlet end. Each tile shall have a firm bearing for its entire length and joints left as tight as practicable by turning the individual sections until the ends fit closely. A joint which does not close to within 1/4 in. shall be covered with pieces of broken tile. If laid on *composite* planking, the joints shall be covered with pieces of broken tile and then entirely covered with clay and tamped.

SECTION 734, BEGIN LINE 174, DELETE AND INSERT AS FOLLOWS:

At least 30 calendar days before the start of the wall construction, the Contractor shall submit a quality control plan, QCP, *which will be subject* ~~for~~*to* approval. The QCP shall include, but not be limited to, personnel qualifications, wall construction procedures and sequencing, a verification testing program, and a performance monitoring program. Work shall not begin until written notice has been received from the Engineer that the QCP has been accepted.

DIVISION 800 – TRAFFIC CONTROL DEVICES AND LIGHTING

AGENDA

The Standard Specifications are revised as follows:

SECTION 801, BEGIN LINE 71, DELETE AND INSERT AS FOLLOWS:

801.03 General Requirements

The applicable requirements of the MUTCD shall apply to the installation and materials for traffic control devices subject to the requirements of 107.08 and 107.12. When the plans do not include a maintenance of traffic plan, the Engineer will provide such a plan to the Contractor. The Contractor shall be responsible for the field layout, placement, operation, maintenance, and removal of temporary traffic control devices. A worksite traffic supervisor certified by the American Traffic Safety Service Association, ATSSA, or approved equal certifying organization, shall direct all field layout, placement, operation*, inspection,* maintenance, and removal of temporary traffic control devices. The certified worksite traffic supervisor, CWTS, shall ensure that all traffic control devices, except temporary concrete barrier, meet acceptable standards as outlined in the plans, specifications, and ATSSA's "Quality Standards for Work Zone Traffic Control Devices" prior to installation. The CWTS shall also, prior to installation, ensure that all traffic control devices can be installed in accordance with the plans, specifications, and the MUTCD. All problems shall be reported to the Engineer so a resolution can be worked out prior to installation. The field layout will be reviewed and ~~concurred with~~*is subject to approval* by the Engineer prior to placement of any temporary traffic control devices. The CWTS shall be present for the initial setup and all phase changes during the life of the project. The CWTS may designate responsible Contractor personnel to perform day to day operation*, inspection,* and maintenance of the temporary traffic control devices. These responsible personnel shall work under the direction of the CWTS and their names shall be given to the Engineer on the project. A copy of the CWTS's certification shall be provided to the Engineer prior to the start of construction or placement of temporary traffic control devices or if the worksite traffic supervisor changes.

SECTION 801, BEGIN LINE 113, DELETE AND INSERT AS FOLLOWS:

Temporary traffic control devices shall be maintained to ensure visibility and to protect the public. All reflective sheeting backgrounds and lights shall be kept clean of foreign matter. The Contractor shall complete and submit a "Traffic Control Device Report" when a temporary traffic control device has been installed, removed, relocated, repaired, or at a minimum of once per week based on field observations. This report is supplied in the Proposal Book for the contract and ~~is~~*shall be used* to ensure that the traffic control devices are ~~looked~~ *inspected*~~at~~ daily. The report shall be completed or reviewed by the CWTS. Each report shall be signed by the person who ~~filled it out~~*performed the inspection* and shall be initialed by the CWTS that it was reviewed. The Engineer will sign and date the report when received. The Engineer will not be responsible for the report's completeness and accuracy.

SECTION 801, BEGIN LINE 354, DELETE AND INSERT AS FOLLOWS:

Type 2

Type 2 barriers may be used to separate traffic from the work zone. Type 2 temporary traffic barriers shall meet the appropriate test level 2 or 3 NCHRP 350 crash test standards and shall be approved for use by the FHWA. A 350 crash test letter of ~~approval~~ *eligibility* from the FHWA shall be provided the Engineer prior to placing the unit. The unit selected shall be appropriate for the location considering the maximum posted speed limit on the project and the

allowable area for deflection. The unit shall be installed according to the manufacturer's recommendations.

SECTION 801, BEGIN LINE 373, DELETE AND INSERT AS FOLLOWS:

Type 4

Type 4 temporary traffic barriers shall be those types that are intended to be readily moveable to accommodate the shifting of traffic lanes on a daily basis to better facilitate the changing volumes of traffic during the peak hours of a day. Type 4 temporary traffic barriers shall meet the appropriate test level 3 NCHRP 350 crash test standards and shall be approved for use by the FHWA. A 350 crash test letter of ~~approval~~*eligibility* from the FHWA shall be provided the Engineer prior to placing the unit.

SECTION 807, BEGIN LINE 585, DELETE AND INSERT AS FOLLOWS:

4. High Mast Luminaires

The aiming of the luminaires shall be as shown on the plans. ~~When~~*During* the aiming *and adjustment* process, ~~is being done~~ the luminaire shall be oriented to conform to its raised position and the ring properly tethered to prevent rotation ~~during the aiming adjustment~~. The long axis of the luminaire shall be parallel to the aiming direction ~~indicated~~*as shown* on the plans. All high mast luminaires provided for an interchange shall be the same model.

SECTION 808, BEGIN LINE 319, DELETE AND INSERT AS FOLLOWS:

2. Thermoplastic

a. Application

~~Thermoplastic marking shall be applied in molten form by conventional extrusion when the pavement and ambient air temperatures are a minimum of 50°F and rising; or by ribbon type extrusion or spray when the pavement and ambient air temperatures are 50°F and rising~~*Thermoplastic marking shall be applied in molten form by conventional extrusion, by ribbon type extrusion, or spray when the pavement and ambient air temperatures are 50°F and rising.* Heat bonded preformed thermoplastic may be used for transverse or message markings. The average final thickness of each 36 in. length of thermoplastic marking shall be no less than 90 mils and no more than 125 mils. Immediately following the application of the thermoplastic markings, additional retro-reflectorization shall be provided by applying beads to the surface of the molten material at a uniform minimum rate of 8 lb/100 sq ft of marking. Individual passes of markings shall not overlap or be separated by gaps greater than 1/4 in. longitudinally.

AGENDA

PROPOSAL TO STANDARDS COMMITTEE

PROBLEM(S) ENCOUNTERED: Post installation inspection of pipes is not being done on a regular basis.

PROPOSED SOLUTION: Incorporate the proposed changes to 715.09 to better ensure specifications are being followed for post installation inspection of pipe.

APPLICABLE STANDARD SPECIFICATIONS: 715.08, 715.09, 715.14.

APPLICABLE STANDARD DRAWINGS: None

APPLICABLE DESIGN MANUAL SECTION: None

APPLICABLE SECTION OF GIFE: 4.11.2

APPLICABLE RECURRING SPECIAL PROVISIONS: None

PAY ITEMS AFFECTED: None

APPLICABLE SUB-COMMITTEE ENDORSEMENT: INDOT Pipe Committee

IMPACT ANALYSIS (attach report):

Submitted By: Jim Reilman

Title: State Materials Engineer

Organization: INDOT, Division of Materials and Tests

Phone Number: 317-522-9692

Date: 11/23/2020

AGENDA

IMPACT ANALYSIS REPORT CHECKLIST

Explain the business case as to why this item should be presented to the Standards Committee for approval. Answer the following questions with Yes, No or N/A.

Does this item appear in any other specification sections? No
Will approval of this item affect the Approved Materials List? No
Will this proposal improve:

Construction costs? N/A

Construction time? N/A

Customer satisfaction? Yes

Congestion/travel time? N/A

Ride quality? N/A

Will this proposal reduce operational costs or maintenance effort? Yes

Will this item improve safety:

For motorists? N/A

For construction workers? N/A

Will this proposal improve quality for:

Construction procedures/processes? Yes

Asset preservation? Yes

Design process? N/A

Will this change provide the contractor more flexibility? No

Will this proposal provide clarification for the Contractor and field personnel? Yes

Can this item improve/reduce the number of potential change orders? N/A
Is this proposal needed for compliance with:

Federal or State regulations? N/A

AASHTO or other design code? N/A

Is this item editorial? No

Provide any further information as to why this proposal should be placed on the Standards Committee meeting Agenda:

AGENDA

REVISION TO STANDARD SPECIFICATIONS

SECTION 109 - MEASUREMENT AND PAYMENT
109.05.1*(g) Mandrel Testing of Pipe*
SECTION 715 - PIPE CULVERTS, AND STORM AND SANITARY SEWERS
715.08 ~~Blank~~*Backfilling*
715.09 ~~Backfilling~~*Quality Adjustments*
715.14 Basis of Payment

(Note: Proposed changes shown highlighted gray.
This item was discussed and withdrawn on May 21, 2020 and December 17, 2020 meetings.)

The Standard Specifications are revised as follows:

SECTION 109, AFTER LINE 841, INSERT AS FOLLOWS:

(g) Pipe Condition

Quality adjustments will be calculated in accordance with 715.09.

SECTION 715, BEGIN LINE 334, DELETE AND INSERT AS FOLLOWS:

~~**715.08 Blank**~~

715.~~09~~*08* Backfilling*, Post Installation Inspection, and Acceptance*

All pipe trenches shall be backfilled with structure backfill~~ or flowable backfill~~. Structure backfill shall be placed in accordance with 211. ~~Flowable backfill shall be placed in accordance with 213.07 as shown on the plans or as directed~~*Structure backfill nominal sizes 2 in. and 1 1/2 in. shall not be used as pipe backfill on any pipe with exterior ribs, corrugations, or other profile.*

If a pipe is to be backfilled using one of the flowable backfill options, design calculations shall be submitted in accordance with 105.02, either proving the pipe will not float or detailing the methods to be taken to prevent the pipe from floating during installation of the flowable backfill. Prior to placing *one of the* flowable *backfill options for structure* backfill, all standing water shall be removed from the trench. If ~~the~~ water cannot be removed from the trench, *one of the non-flowable* structure backfill *options* shall be used ~~in lieu of flowable~~*to* backfill to an elevation 2 ft above the ~~ground~~water. The remainder of the trench shall be backfilled as shown on the plans.

Where material other than structure backfill is allowed and used for backfilling, it shall be of such nature that compacts readily. The portion around and for 6 in. above the top of the pipe shall be free from large stones. The material shall be placed in layers not exceeding 6 in. loose measurement, and each layer shall be compacted thoroughly by means of mechanical tamps.

Where coarse aggregate or 2 in., 1 1/2 in., 1 in., or 1/2 in. structure backfill is used for structure backfill, geotextile in accordance with 918.02(a) Type 2A shall be used.

Backfill for slotted drain pipe and slotted vane drain pipe shall consist of class A concrete on both sides of the pipe. During the backfilling and paving operations, the slot shall be covered to prevent infiltration of material into the pipe.

(a) Inspection, Mandrel Testing, and Acceptance

REVISION TO STANDARD SPECIFICATIONS

SECTION 109 - MEASUREMENT AND PAYMENT
109.05.1*(g) Mandrel Testing of Pipe*
SECTION 715 - PIPE CULVERTS, AND STORM AND SANITARY SEWERS
715.08 ~~Blank~~*Backfilling*
715.09 ~~Backfilling~~*Quality Adjustments*
715.14 Basis of Payment

1. Inspection

All pipes, except underdrains, will be visually inspected for acceptance a minimum of 30 days after the completion of backfill operations. Pipes that cannot be visually inspected shall be video inspected for acceptance using equipment in accordance with 718.07. The Engineer will determine the sections of pipe to be video inspected.

For pipes that were video inspected, a copy of the video inspection shall be provided in a format acceptable to the Engineer. The video inspection shall be provided prior to performing the mandrel testing or if mandrel testing is not required, prior to acceptance of the pipe.

Commercial and private drive pipes are excluded from the video inspection and mandrel testing requirements.

~~For pipe not requiring mandrel testing that is determined to be unacceptable by the Engineer, the unacceptable pipe shall be replaced between the nearest pipe joints or to the nearest structure, or a remediation plan shall be prepared by a professional engineer and submitted to the Engineer for final determination.~~

2. Mandrel Testing and Acceptance

After the visual or video inspection, the Contractor shall check *for* pipe deflection by performing ~~a~~ mandrel test*ing* as directed on pipes manufactured from materials listed in the following table. The Engineer will determine the runs of pipe ~~installations~~ to be mandrel tested with a minimum of 10% of the total length of each *pipe* material *pay item diameter* to be ~~inspected~~*tested*. *All mandrel testing shall be performed in the presence of the Engineer.*

Pipes Require~~d~~*ing* ~~to Be~~ Mandrel Teste~~d~~*ing*	
Pipe Material	Standard Specifications
Corrugated Polyethylene Pipe*	907.17(b)
Corrugated Polypropylene Pipe	907.19
Profile Wall Polyethylene Pipe	907.20
Smooth Wall Polyethylene Pipe	907.21
Profile Wall PVC Pipe*	907.22
Smooth Wall PVC Pipe	907.23
* *When used as underdrain pipe, mandrel testing will not be required.*	

AGENDA

REVISION TO STANDARD SPECIFICATIONS

SECTION 109 - MEASUREMENT AND PAYMENT
109.05.1*(g) Mandrel Testing of Pipe*
SECTION 715 - PIPE CULVERTS, AND STORM AND SANITARY SEWERS
715.08 ~~Blank~~*Backfilling*
715.09 ~~Backfilling~~*Quality Adjustments*
715.14 Basis of Payment

Two mandrels shall be provided. One shall be 95% of the pipe pay item diameter and the other shall be 92.5% of the pipe pay item diameter. The mandrel*s* shall have a minimum of nine arms or prongs~~ and a diameter that is 95% of the nominal pipe diameter~~. The Contractor shall *also* provide a proving ring ~~that is 95% of the nominal pipe diameter~~ for each mandrel. *One proving ring shall be 95% of the pipe pay item diameter and the other proving ring shall be 92.5% of the pipe pay item diameter. The Engineer will check each proving ring and mandrel to ensure they are the proper sizes prior to the Contractor performing the mandrel testing.*

The Contractor shall pull the mandrel *that is 95% of the pipe pay item diameter* through the *chosen runs of* pipe by hand. *If the mandrel passes through the pipe when pulled by hand, the pipe run will be considered acceptable.* If ~~the~~*this* mandrel does not pass through the pipe*,* ~~the Contractor shall measure and report the minimum diameter of the deficient pipe to the Engineer~~*the locations where the mandrel does not pass shall be documented and reported to the Engineer.*

Where the 95% mandrel does not pass through the pipe run, the Contractor shall retest, pulling a mandrel that is 92.5% of the pipe pay item diameter through the pipe run by hand. If this mandrel does not pass through the pipe run, the locations where the mandrel does not pass shall be documented and reported to the Engineer.

For every pipe material where the mandrel that is 95% of the pipe pay item diameter does not pass through the pipe when pulled by hand, the Engineer may order mandrel testing for the total contract length of that pipe material pay item diameter.

Results of all mandrel testing shall be reported on the mandrel testing of pipe structures form. A copy of the completed form shall be submitted to the Engineer within 24 h of completion of mandrel testing. The mandrel testing of pipe structures form is available on the Department's website.

(b) Pipe Determined to be Unacceptable after Installation

For pipe that is determined by the Engineer to be unacceptable due to longitudinal or circumferential cracks, joint separation, or other issues deemed detrimental to the performance of the pipe, the Contractor shall replace all of the unacceptable pipe between either two existing pipe joints or between an existing pipe joint and the nearest structure.

All replaced or remediated pipe sections will be reinspected a minimum of 30 days after the completion of backfill operations at the location of the replaced or remediated pipe. If the pipe material is one requiring mandrel testing in accordance with 715.08(a)2,

mandrel testing shall be performed a minimum of 30 days after the completion of backfill operations and the results shall be documented and reported to the Engineer.

1. Pipe Not Requiring Mandrel Testing

In lieu of replacing the unacceptable pipe, the Contractor may submit an evaluation of the pipe and a remediation plan, both of which have been prepared, signed, sealed, and dated by a professional engineer to the Engineer for review and final determination.

2. Pipe Requiring Mandrel Testing

If the minimum diameter of *any portion of* the ~~deficient~~ pipe *run* is between 92.5% and 95.0% of the ~~nominal~~ pipe *pay item* diameter, the ~~Contractor shall provide an evaluation of the deficient pipe prepared by a professional engineer~~*pipe will be considered unacceptable. In lieu of replacing the unacceptable pipe, the Contractor may submit an evaluation of the pipe and a remediation plan, if applicable, both of which have been prepared, signed, sealed, and dated by a professional engineer to the Engineer for review and final determination.* The evaluation shall consider the severity of the deflection and its effects on structural integrity, environmental conditions, and the design service life of the pipe. ~~A report summarizing t~~*T*he evaluation ~~and including~~*shall include* the professional engineer's recommendation for acceptance, remediation *if applicable*, or replacement of the pipe~~ shall be submitted to the Engineer for review and final determination~~.

If the minimum diameter of the ~~deficient~~ pipe is ~~equal to or~~ less than 92.5% of the ~~nominal~~ pipe *pay item* diameter, the ~~deficient~~ pipe *run* shall ~~either~~ be replaced ~~or a remediation plan shall be prepared by a professional engineer and submitted to the Engineer for final determination~~.

~~The deficient pipe shall be replaced if the professional engineer's remediation plan recommends replacement of the pipe or if the pipe has been damaged.~~

~~Deficient pipe shall at a minimum be replaced between the nearest pipe joints or to the nearest structure. Replaced or remediated pipe sections shall be mandrel tested a minimum of 30 days after the completion of backfill operations.~~

~~Commercial and private drive pipes are excluded from the mandrel testing and video inspection requirements.~~

~~Where material other than structure backfill or flowable backfill is allowed and used for backfilling, it shall be of such nature that compacts readily. That portion around and for 6 in. above the top of the pipe shall be free from large stones. This material shall be placed in layers not to exceed 6 in., loose measurement, and each layer compacted~~

REVISION TO STANDARD SPECIFICATIONS

SECTION 109 - MEASUREMENT AND PAYMENT
109.05.1*(g) Mandrel Testing of Pipe*
SECTION 715 - PIPE CULVERTS, AND STORM AND SANITARY SEWERS
715.08 ~~Blank~~*Backfilling*
715.09 ~~Backfilling~~*Quality Adjustments*
715.14 Basis of Payment

~~thoroughly by means of mechanical tamps. Where coarse aggregate is used for structure backfill, geotextile shall be installed.~~

~~An adequate earth cover, as shown on the plans, shall be placed over the structure before heavy equipment is operated over it.~~

~~Backfill for slotted drain pipe and slotted vane drain pipe shall consist of class A concrete on both sides of the pipe. During the backfilling and paving operations, the slot shall be covered to prevent infiltration of material into the pipe.~~

715.09 Quality Adjustments

For pipe deemed unacceptable as per 715.08(b) that is allowed to remain in place without remedial actions, a quality adjustment in accordance with 109 will be assessed at 50% of the unit price for the entire length of pipe between two successive structures.

For pipe deemed unacceptable as per 715.08(b) that receives remedial actions and either subsequently successfully passes a mandrel that is 95% of the pipe pay item diameter or a subsequent review of a video of the remediated rigid pipe shows the remedial actions to be successful, then a quality adjustment in accordance with 109 will be assessed at 25% of the unit price for the entire length of pipe between two successive structures.

For pipe deemed unacceptable as per 715.08(b) that is replaced and, if required, subsequently successfully passes a mandrel that is 95% of the pipe pay item diameter, then no quality adjustment will be assessed and that run of pipe will be paid at 100% of the unit price for the length of pipe replaced.

SECTION 715, AFTER LINE 675, INSERT AS FOLLOWS:

Adjustments to the contract payment with respect to pipe condition will be included in a quality adjustment in accordance with 109.05.1.

ACTIVA

COMMENTS AND ACTION

109.05.1*(g) Mandrel Testing of Pipe*
715.08 ~~Blank~~*Backfilling*
715.09 ~~Backfilling~~*Quality Adjustments*
715.14 Basis of Payment

DISCUSSION:

Motion: Second: Ayes: Nays: FHWA Approval:	Action: ___ Passed as Submitted ___ Passed as Revised ___ Withdrawn
Standard Specifications Sections referenced and/or affected: 715.09 pg 697; 715.14 pg 703. Recurring Special Provision references in: NONE Standard Drawing affected: NONE Design Manual Sections affected: NONE GIFE Sections cross-references: 4.11.2	___ 2022 Standard Specifications ___ Revise Pay Items List ___ Create RSP (No.___) Effective: RSP Sunset Date: ___ Revise RSP (No.___) Effective: RSP Sunset Date: ___ Standard Drawing Effective: ___ Create RPD (No. ___) Effective: ___ GIFE Update ___ SiteManager Update

AGENDA

PROPOSAL TO STANDARDS COMMITTEE

PROBLEM(S) ENCOUNTERED: INDOT has a longstanding QC/QA soil unique provision. By its definition, unique is something that is for one or two jobs. INDOT tried this concept on multiple contracts over the past 10 years and it seems to have worked well. Thus, it is time to move the unique provision into an RSP and maybe the Standard Specifications.

PROPOSED SOLUTION: Convert the QC/QA soils unique provision into an RSP and consider inclusion in the Standard Specifications.

APPLICABLE STANDARD SPECIFICATIONS: New section 218

APPLICABLE STANDARD DRAWINGS: NA

APPLICABLE DESIGN MANUAL SECTION: yes; will need instructions to designers on when to use. Propose similar guidance as to when to use 501 QC/QA PCCP vs 502 PCCP.

APPLICABLE SECTION OF GIFE: yes

APPLICABLE RECURRING SPECIAL PROVISIONS: create new RSP

PAY ITEMS AFFECTED: Yes, create new pay items

APPLICABLE SUB-COMMITTEE ENDORSEMENT: Ad Hoc: Victoria Leffel, Jim Reilman, Nayyar Siddiki, Kurt Sommer, Haiyan Yang, earthwork contractors referred by ICI

IMPACT ANALYSIS (attach report):

Submitted By: Jim Reilman for Nayyar Siddiki

Title: State Materials Engineer

Organization: INDOT, Division of Materials & Tests

Phone Number: 317-522-9692

Date: 10/22/2020

AGENDA

IMPACT ANALYSIS REPORT CHECKLIST

Explain the business case as to why this item should be presented to the Standards Committee for approval. Answer the following questions with Yes, No or N/A.

Does this item appear in any other specification sections? No
Will approval of this item affect the Approved Materials List? NA
Will this proposal improve:

Construction costs? Yes

Construction time? NA

Customer satisfaction? Yes

Congestion/travel time? NA

Ride quality? yes

Will this proposal reduce operational costs or maintenance effort? Yes

Will this item improve safety:

For motorists? yes

For construction workers? NA

Will this proposal improve quality for:

Construction procedures/processes? yes

Asset preservation? Yes

Design process? NA

Will this change provide the contractor more flexibility? Yes

Will this proposal provide clarification for the Contractor and field personnel? Yes

Can this item improve/reduce the number of potential change orders? NA

Is this proposal needed for compliance with:

Federal or State regulations? No

AASHTO or other design code? No

Is this item editorial? No

Provide any further information as to why this proposal should be placed on the Standards Committee meeting Agenda:

AGENDA

(Note: This item was withdrawn from the November 19, 2020 and December 17, 2020 meetings)

The Standard Specifications are revised as follows:

SECTION (NEW) 218, BEGIN LINE 1, INSERT AS FOLLOWS:

SECTION 218 – QC/QA FOR SOIL FILL SECTIONS AND QC/QA FOR SUBGRADE

218.01 Description

This work shall consist of incorporating QC/QA processes in the construction of soil fill sections using a combination of borrow, embankment, and excavation, or in the construction of subgrades, all in accordance with 105.03, 203, and 207.

218.02 Quality Control

QC testing shall include DCP in accordance with ITM 509, LWD in accordance with ITM 508, moisture in accordance ITM 506 or AASHTO T 255, and one-point proctor in accordance with ITM 512.

(a) Quality Control Plan

The Contractor shall prepare and submit a QCP in accordance with ITM 803. The QCP shall be submitted to the Engineer at least 15 days prior to the Contractor's planned start date for soil or subgrade work. The QCP will be returned either as accepted or showing changes or corrections required within 15 days of receipt. If required to be changed or corrected, the QCP shall be resubmitted until it is accepted. Soil and subgrade operations shall not begin until the Contractor receives written notice from the Engineer that the QCP has been accepted.

(b) Quality Control Manager and Technician

The Contractor shall provide a QC Manager and QC Technician in accordance with ITM 803, section 4.5. The QC Technician shall be qualified in accordance with the Department's Division of Materials and Tests Directive 107 for ITM 506, ITM 508, ITM 509, and ITM 512, and AASHTO T 255.

CONSTRUCTION REQUIREMENTS

218.03 General Requirements

QC testing shall be performed in accordance with the QCP and ITM 803 section 14.6 or section 14.7.

Soil Management shall be in accordance with the QCP and ITM 803. Adjustments shall be made to compaction procedures when the soil type changes.

The Contractor shall provide documentation in accordance with the QCP and ITM 803 by the end of the following business day or before the next QA test, whichever comes first.

AGENDA

218.04 Test Sections

Test sections shall be constructed in accordance with the QCP.

Test sections shall be constructed for non-chemically modified soils in accordance with 203, ITM 513, and ITM 803 to determine compaction pattern and rolling passes necessary to meet the DCP requirements. The roller equipment selected for use and rolling pattern shall be based on best compaction practice for the soil types encountered on the contract. Intelligent compaction methods described in ITM 513 may be used but will not be required. The soil in the test section shall meet the requirements of 203.

218.05 Acceptance of Soil Compaction

Acceptance of the compaction of the soils and subgrade will be based on the results of measurements and tests performed by the Engineer.

The moisture content and compaction acceptance of the soil fill sections will be determined in accordance with 203.23 and 203.24. The moisture content and compaction acceptance of chemically modified soils will be determined in accordance with 215 or 207.

The Contractor shall notify the Engineer when a lift area is ready for acceptance testing. Testing will be performed at random locations in accordance with ITM 802 at the frequency described below.

Frequency of QA Testing		
Test	*Soils*	*Subgrade*
Moisture Content	*1 per day*	*1 per every 4 h*
Strength or Stiffness	*3 per 2,000 cu yd.*	*3 per 2,000 cu yd*
		3 per 1,400 cu yd for chemically modified soil
Gradation	---	*1 per every 2,500 cu yd of chemically modified soil*
Maximum Dry Density	*1 at start of work and 1 for every change in soil type*	---
One Point Proctor	*1 per every 3 days and 1 for every change in soil type*	---
Spreading	---	*ITM 516*
Adjustment of Chemical	---	

218.06 Deficiencies

Individual soil fill sections or subgrade locations that do not meet the requirements of 203.23 and 203.24, will be considered deficient. All locations exhibiting deflections or

AGENDA

rutting in excess of the values shown in 203.26, as determined by the Department, will also be considered deficient.

When a deficiency is identified at the random location or by additional selective testing, the Contractor shall investigate and correct the deficiency by reworking the location in accordance with the QCP. The Engineer will subsequently randomly select at least two additional locations within the remaining lift area and perform acceptance testing. If either of the two additional locations fails to meet the acceptance criteria, then the entire lift area shall be evaluated by the Contractor in accordance with the QCP and reworked as necessary. All reworked areas shall be proofrolled in accordance with 203.26 before acceptance testing is resumed in that lift area.

Locations where rework is not required may still be reworked at the Contractor's option in accordance with the QCP. Reworked areas are subject to further review for deflections or rutting at the discretion of the Department.

218.07 Method of Measurement

Performing the QC services portion of the work, including but not limited to, equipment required for the QC/QA soil process, all quality control procedures including the QCP, on-site training, testing facility, construction of test sections, QC testing, inspection, and other professional services necessary will not be measured for payment.

218.08 Basis of Payment

Where a QC/QA soil fill section or subgrade has not been constructed and conditions exist below the specified subgrade compaction depth that prevent achieving the specified compaction, payment for correcting such conditions will be made based on the directed method of treatment.

All costs for performing the QC services portion of the work, including but not limited to, equipment required for the QC/QA soil process, all quality control procedures including the QCP, on-site training, testing facility, construction of test sections, QC testing, inspection, and other professional services necessary shall be included in the lump sum items below.

Payment will be made under:

Pay Item	***Pay Unit Symbol***
QC/QA Services for Soil Fill Sections	*LS*
QC/QA Services for Subgrade	*LS*

AGENDA

COMMENTS AND ACTION

SECTION 218 – QC/QA SOIL EMBANKMENT AND QC/QA SUBGRADE (Proposed new section)

DISCUSSION:

Motion: Second: Ayes: Nays: FHWA Approval:	Action: ___ Passed as Submitted ___ Passed as Revised ___ Withdrawn
Standard Specifications Sections referenced and/or affected: SECTION 218 – QC/QA SOIL EMBANKMENT AND QC/QA SUBGRADE (Proposed new section). Recurring Special Provision references to: 207-R-687 (effective September 1, 2020). Standard Drawing affected: NONE Design Manual Sections affected: see proposal. GIFE Sections cross-references: NONE	___ 2022 Standard Specifications ___ Revise Pay Items List ___ Create RSP (No.___) Effective: RSP Sunset Date: ___ Revise RSP (No.___) Effective: RSP Sunset Date: ___ Standard Drawing Effective: ___ Create RPD (No. ___) Effective: ___ GIFE Update ___ SiteManager Update

AGENDA

PROPOSAL TO STANDARDS COMMITTEE

PROBLEM(S) ENCOUNTERED: There is still a QA adjustment shown in 502.

PROPOSED SOLUTION: A few years ago QA adjustments were all moved to the 109 section. Apparently the adjustment in 502 was inadvertently omitted. Proposed solution is to move the 502 QA adjustment to the 109 section.

APPLICABLE STANDARD SPECIFICATIONS: 109, 502

APPLICABLE STANDARD DRAWINGS: None

APPLICABLE DESIGN MANUAL SECTION: None

APPLICABLE SECTION OF GIFE:

APPLICABLE RECURRING SPECIAL PROVISIONS: None

PAY ITEMS AFFECTED: 502-03289

APPLICABLE SUB-COMMITTEE ENDORSEMENT:

IMPACT ANALYSIS (attach report):

Submitted By: Jim Reilman

Title: State Materials Engineer

Organization: INDOT, Division of Materials & Tests

Phone Number: 317-522-9692

Date: 1/11/2021

AGENDA

IMPACT ANALYSIS REPORT CHECKLIST

Explain the business case as to why this item should be presented to the Standards Committee for approval. Answer the following questions with Yes, No or N/A.

Does this item appear in any other specification sections? Yes
Will approval of this item affect the Approved Materials List? No
Will this proposal improve:

Construction costs? N/A

Construction time? N/A

Customer satisfaction? N/A

Congestion/travel time? N/A

Ride quality? N/A

Will this proposal reduce operational costs or maintenance effort? N/A

Will this item improve safety:

For motorists? N/A

For construction workers? N/A

Will this proposal improve quality for:

Construction procedures/processes? N/A

Asset preservation? N/A

Design process? N/A

Will this change provide the contractor more flexibility? N/A

Will this proposal provide clarification for the Contractor and field personnel? Yes

Can this item improve/reduce the number of potential change orders? N/A

Is this proposal needed for compliance with:

Federal or State regulations? No

AASHTO or other design code? No

Is this item editorial? No

Provide any further information as to why this proposal should be placed on the Standards Committee meeting Agenda:

AGENDA

REVISION TO STANDARD SPECIFICATIONS

SECTION 109 - MEASUREMENT AND PAYMENT
109.05.1 Quality Adjustments
SECTION 502 - PORTLAND CEMENT CONCRETE PAVEMENT, PCCP
502.23 Basis of Payment

(Note: Proposed changes shown highlighted gray)

The Standard Specifications are revised as follows:

SECTION 109, BEGIN LINE 796, INSERT AS FOLLOWS:

109.05.1 Quality Adjustments

Quality adjustments are those adjustments in the payment for work done or materials furnished and incorporated into the work which either exceed or fall below the standards established by the contract.

A change order will be prepared to reflect these adjustments. The unit price for these adjustments will be $1.00 and the quantities will be in units of dollars.

Payment will be made under:

Pay Item	**Pay Unit Symbol**
Quality Adjustments, _____ type	DOL

The dollars shown shall be the amount of the quality adjustments for the following types and may consist of plus or minus adjustments.

(a) HMA

Quality adjustments with respect to mixture, density, and smoothness for mixture produced will be computed in accordance with 401.19.

(b) PCCP

Quality adjustments will be calculated in accordance with 501.28 *or 502.21(c) as appropriate.*

SECTION 502, BEGIN LINE 458, DELETE AND INSERT AS FOLLOWS:

502.23 Basis of Payment

The accepted quantities of PCCP will be paid for at the contract unit price per square yard for the thickness specified, complete in place.

Adjustments to the contract payment with respect to thickness will be included in a quality assurance adjustment pay item in accordance with 109.05.1.

Milled pavement corrugations will be paid for in accordance with 606.0~~3~~.

Payment will be made for portland cement content of more than 564 lb~~s~~/cu yd when ordered in writing. Additional payment for the quantity used will be at the net unit price of

AGENDA

portland cement as shown by certified vouchers for the quantity used in accordance with 109.05.

~~The quality assurance adjustment quantity for thickness will be determined in accordance with 502.21(c).~~

~~An adjustment to the contract payment with respect to thickness will be made utilizing the quality assurance adjustment pay item. The unit price for this pay item will be $1.00. The quantity is the total calculated in accordance with 502.21(c). A change order developed in accordance with 109.05 will be prepared to reflect contract adjustments.~~

Payment for pavement thickness determinations will be made at the contract lump sum price for coring, PCCP in accordance with 501.31. A change order in accordance with 109.05 will be developed to adjust the cost of PCCP when the final PCCP quantity differs from the bid quantity by more than 2,400 sq yd*s*. This adjustment covers the cost of cores for the adjusted quantity of PCCP. The adjustment, plus or minus, will be based on the difference in the number of subsections, rounded to the nearest full subsection, times $100.

Payment will be made under:

Pay Item	**Pay Unit Symbol**
PCCP, _____, in. thickness	SYS
~~Quality Assurance Adjustment~~	~~DOL~~

AGENDA

COMMENTS AND ACTION

109.05.1 Quality Adjustments
502.23 Basis of Payment

DISCUSSION:

Motion: Second: Ayes: Nays: FHWA Approval:	Action: ___ Passed as Submitted ___ Passed as Revised ___ Withdrawn
Standard Specifications Sections referenced and/or affected: 109.05.1.pg 117; 502.23 pg. 415. Recurring Special Provision references in: NONE Standard Drawing affected: NONE Design Manual Sections affected: NONE GIFE Sections cross-references: NONE	___ 2022 Standard Specifications ___ Revise Pay Items List ___ Create RSP (No.___) Effective: RSP Sunset Date: ___ Revise RSP (No.___) Effective: RSP Sunset Date: ___ Standard Drawing Effective: ___ Create RPD (No. ___) Effective: ___ GIFE Update ___ SiteManager Update

AGENDA

PROPOSAL TO STANDARDS COMMITTEE

PROBLEM(S) ENCOUNTERED:
MSE walls shall only be used on projects where the ground water table is below the elevation of the proposed leveling pad. Installation of mechanically stabilized earth walls in "bath tub" conditions or in wet/saturated soils has shown premature and excessive distresses.

The levelling pad dimensions are currently not shown on the shop drawings creating ambiguity.

PROPOSED SOLUTION:

Incorporate the proposed language into 731.

APPLICABLE STANDARD SPECIFICATIONS: 731

APPLICABLE STANDARD DRAWINGS: N/A

APPLICABLE DESIGN MANUAL SECTION: 410-5.01(05)

APPLICABLE SECTION OF GIFE: None

APPLICABLE RECURRING SPECIAL PROVISIONS: None

PAY ITEMS AFFECTED: None

APPLICABLE SUB-COMMITTEE ENDORSEMENT: Retaining Wall Committee

IMPACT ANALYSIS (attach report):

Submitted By: Jim Reilman for Kamran Ghani

Title: State Materials Engineer

Organization: INDOT, Division of Materials & Tests

Phone Number: 317-522-9692

Date: 1/12/2021

AGENDA

IMPACT ANALYSIS REPORT CHECKLIST

Explain the business case as to why this item should be presented to the Standards Committee for approval. Answer the following questions with Yes, No or N/A.

Does this item appear in any other specification sections?
Will approval of this item affect the Approved Materials List?
Will this proposal improve:

- Construction costs?
- Construction time?
- Customer satisfaction?
- Congestion/travel time?
- Ride quality?

Will this proposal reduce operational costs or maintenance effort?

Will this item improve safety:

- For motorists?
- For construction workers?

Will this proposal improve quality for:

- Construction procedures/processes?
- Asset preservation?
- Design process?

Will this change provide the contractor more flexibility?

Will this proposal provide clarification for the Contractor and field personnel?

Can this item improve/reduce the number of potential change orders?

Is this proposal needed for compliance with:

- Federal or State regulations?
- AASHTO or other design code?

Is this item editorial?

Provide any further information as to why this proposal should be placed on the Standards Committee meeting Agenda:

AGENDA

(Note: Proposed changes shown highlighted gray)

The Standard Specifications are revised as follows:

SECTION 731, BEGIN LINE 8, INSERT AS FOLLOWS:

731.02 General Design Requirements

An MSE retaining wall shall consist of a non-structural concrete leveling pad, concrete face panels, precast or cast-in-place concrete coping, ground reinforcement elements mechanically connected to each panel, and accommodations for appurtenances behind, in front of, under, mounted upon, or passing through the wall. Ground reinforcement shall have sufficient strength, frictional resistance, and quantity as required by design. If a drainage system is shown on the plans, the wall design shall accommodate the drainage system.

The MSE retaining wall system shall be selected from the Department's list of approved retaining wall systems. A retaining wall system manufacturer will be considered for inclusion on the Department's list by following ITM 806, Procedure J. The quantities shown in the Schedule of Pay Items will be the same for each MSE retaining wall system. The MSE retaining wall panels shall be constructed as shown on the panels' working drawings, based on the requirements herein.

If the wall manufacturer needs additional information to complete the design, the Contractor shall be responsible for obtaining such information.

All appurtenances behind, in front of, under, mounted upon, or passing through the wall such as drainage structures, utilities, or other appurtenances shown on the plans, shall be accounted for in the design of the wall.

The Contractor shall determine the final leveling-pad layout and step elevations that provide the wall envelope shown on the plans. The Contractor shall use this information to provide a final horizontal plan and vertical elevation profile along the front face of the wall to account for the wall envelope shown on the plans. The final coping or top-of-wall elevations shall be at or above those shown on control line 1 on the plans. The final top-of-leveling-pad elevations shall be at or below those shown on control line 3 on the plans. Leveling-pad steps shall be in 2.5 ft increments. *The top of the leveling pad elevation shall be a minimum of 1.0 ft above the ordinary high water elevation or groundwater table elevation, whichever is higher. The leveling pad dimensions shall typically be 12 in. wide and 6 in. thick and shown on the working drawings.*

Where a coping or barrier is utilized, the wall face panel shall extend up into the coping or barrier a minimum of 2 in. The top of the face panels may be level or sloped to meet the top of the face panel line shown. Cast-in-place concrete will not be an acceptable replacement for panel areas indicated by the wall envelope.

AGENDA

COMMENTS AND ACTION

731.02 General Design Requirements

DISCUSSION:

Motion: Second: Ayes: Nays: FHWA Approval:	Action: ___ Passed as Submitted ___ Passed as Revised ___ Withdrawn
Standard Specifications Sections referenced and/or affected: 731 pg 772-773. Recurring Special Provision references in: NONE Standard Drawing affected: NONE Design Manual Sections affected: 410-5.01(05) GIFE Sections cross-references: NONE	___ 2022 Standard Specifications ___ Revise Pay Items List ___ Create RSP (No.___) Effective: RSP Sunset Date: ___ Revise RSP (No.___) Effective: RSP Sunset Date: ___ Standard Drawing Effective: ___ Create RPD (No. ___) Effective: ___ GIFE Update ___ SiteManager Update

AGENDA

PROPOSAL TO STANDARDS COMMITTEE

PROBLEM(S) ENCOUNTERED: Currently for permanent OS or MS Guardrail End Treatments (601.07) and permanent Impact Attenuators (601.08) INDOT requires that the contractor provide a copy of the manufacuter's FHWA eligibility letter to the Engineer. Given that these permanent systems are to be choosen from the Department's approved materials list we do not believe the collection of the eligibility letter is necessary. To be put on the Department's approved materials list for both the permanent OS or MS guardrail end treatment and the permanent impact attenuator, the manufacture has already provided all the necessary testing and system information confirming their system meets the required testing. In addition, 801.10.1, construction zone energy absorbing terminal, CZ, currently states that the FHWA approval letter shall be furnished to the Engineer. FHWA approval letter should be revised to FHWA eligiblity letter to reflect the correct terminology. The FHWA eligibility letter will still need to be provided for 801.10.1 because the Department does not have an approved material list for CZ's.

PROPOSED SOLUTION: Remove the language to provided a copy of the FHWA eligibility letter to the Engineer from 601.07 and 601.08. Revise FHWA approval letter to FHWA eligibility letter in 801.10.1. The Frequency Manual will also be updated to reflect these proposed deletions and revisions. In addition to these edits we have also proposed to remove some language that has exceeded the allowed date.

APPLICABLE STANDARD SPECIFICATIONS: 601.07, 601.08, and 801.10.1

APPLICABLE STANDARD DRAWINGS: N/A

APPLICABLE DESIGN MANUAL SECTION: N/A

APPLICABLE SECTION OF GIFE: No

APPLICABLE RECURRING SPECIAL PROVISIONS: No

PAY ITEMS AFFECTED: N/A

APPLICABLE SUB-COMMITTEE ENDORSEMENT: Jim Reilman, Mike Pelham, Elizabeth Mouser, Tom Harris, Katherine Smutzer

IMPACT ANALYSIS (attach report): N/A

Submitted By: Katherine Smutzer for Mark Orton

Title: Standards Engineer

Organization: INDOT Standards and Policy

Phone Number: 317-233-2074

Date: 1/14/2021

AGENDA

IMPACT ANALYSIS REPORT CHECKLIST

Explain the business case as to why this item should be presented to the Standards Committee for approval. Answer the following questions with Yes, No or N/A.

Does this item appear in any other specification sections? No

Will approval of this item affect the Approved Materials List? No

Will this proposal improve:

Construction costs? No

Construction time? No

Customer satisfaction? No

Congestion/travel time? No

Ride quality? No

Will this proposal reduce operational costs or maintenance effort? No

Will this item improve safety:

For motorists? No

For construction workers? No

Will this proposal improve quality for:

Construction procedures/processes? Yes

Asset preservation? No

Design process? No

Will this change provide the contractor more flexibility? No

Will this proposal provide clarification for the Contractor and field personnel? Yes

Can this item improve/reduce the number of potential change orders? No

Is this proposal needed for compliance with:

Federal or State regulations? No

AASHTO or other design code? No

Is this item editorial? Yes

Provide any further information as to why this proposal should be placed on the Standards Committee meeting Agenda: We would like for these changes to be included in the 2022 book to be consistance with the Frequency Manual and state the most current document titles.

AGENDA

REVISION TO STANDARD SPECIFICATIONS

SECTION 601 - GUARDRAIL
601.07 Guardrail End Treatments
601.08 Impact Attenuators
SECTION 801 - TRAFFIC CONTROLS FOR CONSTRUCTION AND MAINTENANCE OPERATIONS
801.10.1 Construction Zone Energy Absorbing Terminal, CZ

(Note: Proposed changes shown highlighted gray)

The Standard Specifications are revised as follows:

SECTION 601, BEGIN LINE 1, DELETE AND INSERT AS FOLLOWS:

601.07 Guardrail End Treatments

Guardrail end treatments shall be required to terminate guardrail installations at the locations shown on the plans. The type I guardrail end treatment shall be either as shown on the plans, or shall be selected from the Department's list of approved Guardrail End Treatments. The type II guardrail end treatment shall be as shown on the plans. The type OS or MS guardrail end treatments shall be selected from the Department's list of approved Guardrail End Treatments. ~~The reflectorization of guardrail end treatments, and~~ *T*the grading requirements shall be as shown on the plans.

~~For contracts letting prior to July 1, 2018 the following applies. When a 31 in. guardrail end treatment is required to terminate MGS W-beam guardrail, a 27 3/4 in. guardrail end treatment with an MGS height transition may be substituted when approved by the Engineer.~~

~~Double facing of guardrail end treatment type I will be required when it is used in conjunction with double faced guardrail.~~

~~Each unit shall be installed in accordance with the manufacturer's recommendations. A copy of the manufacturer's FHWA eligibility letter stating that its product complies with the requirements of NCHRP 350 or MASH test level 3 shall be provided.~~

Assembly and installation *or resetting* shall be supervised or performed at all times by an installer trained and certified by the unit's manufacturer, and shall be in accordance with the manufacturer's recommendations ~~at the locations shown on the plans~~. The installer shall be included on the Department's list of Certified Guardrail End Treatment and Impact Attenuator Installers prior to the start of work.

The Contractor shall provide the Department with original copies of all necessary current manufacturer's installation manuals and working drawings in accordance with 105.02.

Double facing of guardrail end treatment type I will be required when it is used in conjunction with double faced guardrail.

When installing end treatments to existing rub rail type guardrail, the rub rail, if ~~not~~ spliced at the last existing post, shall be cut and the end repositioned behind the flange of

the post. If the rub rail is spliced at the last existing post, the existing splice material shall be removed and the end of the rub rail repositioned behind the flange of the post. In both cases, the rub rail shall be connected to the post as shown on the plans.

Guardrail end treatments shall be installed within 24 h of the completion of the guardrail installation to which they are to be attached. Drums in accordance with 801.09 shall be placed for overnight marking of the bare end of the guardrail when the installation of the guardrail end treatment will not be completed until the day following the completion of the guardrail installation to which it is to be attached.

601.08 Impact Attenuators

Impact attenuators shall be placed or reset to obtain the proper height where shown on the plans. The unit for each new location shall be of the width recommended by the manufacturer and for the test level specified and shall be chosen from those shown on the Department's list of approved Impact Attenuators. Each unit shall be placed in accordance with the manufacturer's recommendations, on a PCC pad. ~~A copy of the manufacturer's FHWA eligibility letter stating that its product complies with the requirements of NCHRP 350 or MASH test level 3 shall be provided.~~

Assembly and installation or resetting shall be supervised or performed at all times by an installer trained and certified by the unit's manufacturer, and shall be in accordance with the manufacturer's recommendations at the locations shown on the plans. The installer shall be included on the Department's list of Certified Guardrail End Treatment and Impact Attenuator Installers prior to the start of work.

The Contractor shall provide the Department with original copies of all necessary current manufacturer's installation manuals and working drawings in accordance with 105.02.

Transition panels and all other necessary hardware shown in the manufacturer's recommendations to be required for bi-directional traffic protection shall be included in the installation or resetting, if the unit is installed at a location where traffic is passing the unit on both sides in opposite directions.

SECTION 801, BEGIN LINE 487, DELETE AND INSERT AS FOLLOWS:

801.10.1 Construction Zone Energy Absorbing Terminal, CZ

The construction zone energy absorbing terminal, CZ, shall have passed NCHRP 350 level 3 crash test for all Interstate and other construction sites having a construction zone speed limit in excess of 45 mph and level 2 for non-Interstate construction sites having a construction zone speed limit of 45 mph or less. All energy absorbing terminal, CZ, shall have redirect capabilities and shall be approved by the FHWA. A copy of the crash test results ~~and~~*or* a copy of the FHWA ~~approval~~*eligibility* letter shall be furnished to the

AGENDA

Engineer prior to the installation of the unit. ~~The Contractor may also use the Guard Rail Energy Absorbing Terminal CZ, manufactured by Energy Absorption Systems, Inc. until January 1, 2011. All units of this type in use shall be replaced with a compliant product immediately after this date regardless of the date of letting. No additional payment will be made for this replacement.~~

The unit's nose cover shall be reflectorized to provide improved visibility.

Assembly and installation of the unit shall be supervised or performed at all times by an installer trained and certified by the unit's manufacturer. The size, assembly, and installation shall be in accordance with the manufacturer's recommendations at the locations shown on the plans. When required for bi-directional traffic protection, transition panels and all other necessary hardware shall be included in the installation. A copy of the installer's certificate shall be provided to the Engineer prior to the start of work.

The Contractor shall provide the Department with all necessary manufacturer's installation manuals and working drawings in accordance with 105.02.

Sufficient spare parts or complete units shall be stored in a safe, convenient, nearby location. Such standby materials are not shown in the Schedule of Pay Items. The standby materials shall be utilized to repair or replace damaged units in the shortest time possible. Standby materials used in the repair of damaged units shall be replaced within 24 h of their use.

AGENDA

COMMENTS AND ACTION

601.07 Guardrail End Treatments
601.08 Impact Attenuators
801.10.1 Construction Zone Energy Absorbing Terminal, CZ

DISCUSSION:

Motion: Second: Ayes: Nays: FHWA Approval:	Action: ___ Passed as Submitted ___ Passed as Revised ___ Withdrawn
Standard Specifications Sections referenced and/or affected: 601.07 pg 450; 601.08 pg 451; 801.10.1 pg 821-822. Recurring Special Provision references in: NONE Standard Drawing affected: NONE Design Manual Sections affected: NONE GIFE Sections cross-references: NONE	___ 2022 Standard Specifications ___ Revise Pay Items List ___ Create RSP (No.___) Effective: RSP Sunset Date: ___ Revise RSP (No.___) Effective: RSP Sunset Date: ___ Standard Drawing Effective: ___ Create RPD (No. ___) Effective: ___ GIFE Update ___ SiteManager Update

AGENDA

PROPOSAL TO STANDARDS COMMITTEE

PROBLEM(S) ENCOUNTERED: Certain references in the lighting sections of the Standard Specifications are outdated or inconsistent with current terminology, measurement and separate payment for wiring connector is unnecessary, several luminaire requirements are not easily checked or practical to meet, more flexibility is needed in high mast lighting regarding tower height and number of luminaires to accommodate new design practices, high mast ring and head frame assemblies must be made of stainless steel which limits competition, the alternative handhole spec unnecessarily limits alternatives and does not address handholes that are placed in the roadway.

PROPOSED SOLUTION: Revise the Standards Specifications to address these issues. The handhole specifications are found in section 922.

APPLICABLE STANDARD SPECIFICATIONS: 807, 920 and 922.17

APPLICABLE STANDARD DRAWINGS: None

APPLICABLE DESIGN MANUAL SECTION: 502-4

APPLICABLE SECTION OF GIFE: None

APPLICABLE RECURRING SPECIAL PROVISIONS: None

PAY ITEMS AFFECTED: Yes

APPLICABLE SUB-COMMITTEE ENDORSEMENT: Industry, Purdue Energy Efficiency and Reliability Center, Traffic Standards Subcommittee

IF APPROVED AS RECURRING SPECIAL PROVISION OR PLAN DETAILS, PROPOSED BASIS FOR USE: N/A

IMPACT ANALYSIS (attach report): Yes

Submitted By: Dave Boruff

Title: Manager, Office of Traffic Administration

Organization: INDOT

Phone Number: 317-234-7975

Date: 01/25/21

AGENDA

IMPACT ANALYSIS REPORT CHECKLIST

Explain the business case as to why this item should be presented to the Standards Committee for approval. Answer the following questions with Yes, No or N/A.

Does this item appear in any other specification sections? No
Will approval of this item affect the Approved Materials List? Yes
Will this proposal improve:

Construction costs? Yes

Construction time? No

Customer satisfaction? Yes

Congestion/travel time? N/A

Ride quality? N/A

Will this proposal reduce operational costs or maintenance effort? Yes

Will this item improve safety:

For motorists? Yes

For construction workers? No

Will this proposal improve quality for:

Construction procedures/processes? No

Asset preservation? N/A

Design process? Yes

Will this change provide the contractor more flexibility? Yes

Will this proposal provide clarification for the Contractor and field personnel? N/A

Can this item improve/reduce the number of potential change orders? No

Is this proposal needed for compliance with:

Federal or State regulations? No

AASHTO or other design code? Yes

Is this item editorial? No

Provide any further information as to why this proposal should be placed on the Standards Committee meeting Agenda:

AGENDA

REVISION TO STANDARD SPECIFICATIONS

SECTION 807 - HIGHWAY ILLUMINATION (various)
SECTION 920 - HIGHWAY ILLUMINATION MATERIALS (various)
SECTION 922 - TRAFFIC SIGNALS MATERIALS AND EQUIPMENT
922.17 Handholes

(Note: Proposed changes shown highlighted gray)

The Standard Specifications are revised as follows:

SECTION 807, BEGIN LINE 42, DELETE AND INSERT AS FOLLOWS:

807.03 Working Drawings

Working drawings shall be submitted in accordance with 105.02 for ~~lighting standard~~ *light pole* assemblies, luminaires, and external drive assemblies.

Working drawings for each luminaire model submitted shall include the luminaire specifications and data sheets.

For contracts not utilizing the approved materials list for solid state luminaires, working drawings for luminaires shall also include the Illumination Engineering Society of North America, IESNA, photometric distribution file if the file number varies from what is shown on the plans. The IESNA photometric distribution file shall be in either Visual, developed by Acuity Brands Lighting, or AGi32 from Lighting Analysis, Inc.

Working drawings for conventional ~~lighting standards~~*light pole* shall show the outside shaft diameter, height, wall thickness, *mast* arm length and rise, ~~size~~*mast arm diameter and thickness*, handhole details, grinding details, materials required, and complete anchor-bolt details including bolt circle-projection and hardware. If a breakaway base is required, its details shall be shown.

When requested, sufficient design data shall be furnished with the drawings to verify that conventional ~~lighting standards~~*light pole* are in accordance with wind load, deflection, vibration, and breakaway requirements. All of the above shall be based on the ~~lighting standards~~*light pole* details shown on the plans. After approval, the Engineer shall be advised of where changes to the Installation Summary sheets are being made because of existing roadside conditions. Where necessary, additional ~~lighting standard~~*light pole* working drawings shall be submitted for approval.

If a ~~lighting standard~~*light pole* is designed to support a larger luminaire than that specified, such information shall be shown on the working drawings. A Type C certification from the manufacturer shall be furnished with the working drawings stating that the breakaway devices are in accordance with the breakaway criteria of the AASHTO Standard Specifications for Structural Supports for Highway Signs, Luminaires, and Traffic Signals.

Working drawings for high mast ~~standards~~*towers* shall show the pole height, number of sections, the pole shaft data for each section, luminaire lowering ring assembly, handhole details, materials required, *welding details,* and complete anchor bolt details including bolt circle-projection and hardware.

AGENDA

~~Unless calculations are on file with the Department,~~*If the high mast is a non-standard design* the following design calculations and data shall be submitted for approval prior to the fabrication of a high-mast pole.

SECTION 807, BEGIN LINE 142, DELETE AND INSERT AS FOLLOWS:

807.05 Backfilling

~~Wherever practicable, all~~*All* suitable materials removed from the excavated areas shall be used in refilling cable-duct and conduit trenches. No excavated materials shall be wasted without authorization. Materials authorized to be wasted shall be disposed of as approved. Backfill for trenches shall be placed in layers not to exceed 6 in., loose measurement. The first layer shall be sand or earth containing no particles or lumps that would be retained on a 1/4 in. sieve. The second layer shall contain no particles or lumps that would be retained on a 1 in. sieve. Subsequent layers shall contain no particles or lumps that would be retained on a 3 in. sieve. The second layer and each subsequent layer shall be compacted with pneumatic ~~hand tamps~~*hand-tampers* ~~to the satisfaction of the Engineer~~ to prevent any future settlement of the backfilled area. Backfilling of cable-duct and conduit trenches around ~~lighting standard~~ *light pole* foundations, handholes, manholes, and other structures shall be in accordance with the applicable provisions of 211. Finish grading of earthwork shall be accomplished in a satisfactory manner.

SECTION 807, BEGIN LINE 190, DELETE AND INSERT AS FOLLOWS:

807.07 Connections in Base of ~~Lighting Standards~~*Light Pole*

Conductors shall be electrically bonded to each other, as required to satisfy circuit requirements, by means of compression type fittings of the style and type shown on the plans. Inhibitor compound shall be used on each compression connection. Conductor identification shall be maintained by connecting like color connectors.

A multiple conductor compression fitting shall be used to connect supply conductors and an insulating link used to provide an extension as shown on the plans. These fittings shall be covered with snap-on fiber or plastic covers designed to protect them from electrical contact. Taping will not be allowed. The bare extension of the supply conductor from the multiple fitting to the insulation link shall be no longer than necessary to admit the application of the snap-on cover for the multiple fitting.

The pole circuits shall be connected by means of easily separated, single conductor connector kits. The connector kit on the "hot" side of the pole circuit shall be fused. The connector kit for the neutral side shall not be fused. Fuses shall be of the "KTK-*10*" series with a rated capacity three times the operating amperage of the luminaire. If the required capacity is not a standard size, the next larger size fuse shall be used.

The connector kit on the "hot" side of the pole circuit shall have the following features:

(a) a line side and load side housing made of plastic or water resisting synthetic rubber suitable for direct burial in the ground or installation in sunlight;

(b) a water seal between the two housings;

(c) each housing permanently marked "Line Side" or "Load Side";

(d) a spring loaded, 90% minimum conductivity, contact suitable for gripping the "KTK-*10*" cartridge fuse in each housing. These contacts shall be fully annealed;

(e) an interior arrangement for each housing that will adequately receive and rigidly maintain the fuse contacts;

(f) a terminal on each housing designed for a crimp type connection to the conductor that securely retains the conductor in the proper position;

(g) a water seal between the conductor and the housing;

(h) a disconnecting means that shall retain the fuse on the load side when disconnected and keep the conductive parts of the line side inaccessible; and

(i) sufficient silicone compound provided and used to lubricate the metal parts and the rubber housings or boots for easy assembly.

The neutral side connector kit shall be similar in all respects to that described for the hot side except that a dummy fuse shall be used for the purpose of completing the electrical circuit. The bayonet disconnect feature of the connector kits shall be part of the load side of both the neutral side and the hot side conductors. The line side shall have a socket to receive the bayonet. These kits shall be installed in the pole circuit between the luminaire terminals and the compression connection to the underground distribution circuit as shown on the plans. A separate insulated conductor shall be used to connect the neutral of the underground distribution circuit and the neutral of the pole circuit to the ground lug in the pole base from the point at which both neutrals are connected together by a compression connection. The bayonet disconnect features from the neutral side and the hot side connector kits as cited above shall be included in the sign structure circuitry when luminaires are installed on the sign structures. Consecutive roadway luminaires in a circuit shall be alternately connected to opposite load conductors R or B as specified in the plans to balance the load. Sign luminaires on individual structures shall be similarly connected.

AGENDA

REVISION TO STANDARD SPECIFICATIONS

SECTION 807 - HIGHWAY ILLUMINATION (various)
SECTION 920 - HIGHWAY ILLUMINATION MATERIALS (various)
SECTION 922 - TRAFFIC SIGNALS MATERIALS AND EQUIPMENT
922.17 Handholes

807.08 Placing Wire and Cable

(a) Underground ~~Through Cable-duct~~

All underground distribution conductors shall be continuous runs between splice points. Unless otherwise authorized, splice points shall be inside the bases of ~~lighting standards~~*light poles*, inside handholes, in service distribution boxes, at point of connection to power supply in switch boxes, or in junction boxes. All splices shall be made with the proper connector in accordance with 807.07.

1. *Through* Cable-duct *in Trench*

Cable-duct shall be placed either in a trench or plowed into place. Cable-duct shall be installed without sharp bends or kinks and in straight runs so as to enable withdrawal of a conductor and the installation of new conductor without additional excavation or backfill.

Plowed cable-duct shall be installed at a minimum depth of 2 ft in a single cavity gored into the earth by a vibrating plow blade. The equipment used for plowing the cable-duct shall be designed specifically for that purpose with the power and versatility to easily and accurately bury the various sizes of cable-duct under all normal soil conditions. This equipment shall place the cable-duct without twisting, kinking, or damaging it in any way. Dragging or pulling the cable-duct from the start of the trenching operation will not be allowed. Where two ducts are to be installed parallel to each other, the distance between them shall be no less than 12 in. and no more than 24 in.

The plastic duct of the cable-duct shall be terminated 4 in. above the top of foundations or 4 in. inside handholes with sufficient excess conductors as directed. All terminations of this plastic duct shall be beveled *and* free from any sharp edges or burrs. Insulation of the electrical conductor shall not be damaged when cutting the duct.

~~2. Cable Markers~~

~~The location of underground conduits or cable ducts shall be marked with cable markers. The marker shall be placed at all changes in direction, where the underground distribution circuit is split, and at a maximum of 400 ft intervals on straight runs. Cable markers shall be a slab of concrete 2 ft square by 4 in. thick, with the word "Cable" die impressed into the surface of the marker, a minimum depth of 3/8 in. with letters a minimum of 2 in. high. Arrows showing the direction of the cable shall be die impressed or saw cut a minimum depth of 3/8 in. into the marker surface.~~

~~Curing of the concrete shall be in accordance with 702.22. The cable marker shall have a smooth metal trowel finish without scaling.~~

~~(b)~~*2.*~~Underground~~ Through *Cable-duct in* Conduit

The underground distribution circuit shall be protected by galvanized steel conduit when installed under pavement, in road shoulders, or elsewhere as shown on the plans or as directed.

~~1. Cable-duct~~

Cable-duct shall be pulled through the entire length of galvanized steel conduit if at all possible. If this is not possible, written authorization shall be obtained to allow the duct to be cut away and the conductors installed in the conduit with a minimum of 2 ft of duct extended into the conduit. Where so authorized, the plastic duct shall be terminated in the proper transition fitting attached to the end of the conduit and each conductor of the cable-duct assembly shall continue undamaged and uninterrupted through the galvanized steel conduit to the other end of the conduit where a transition to the cable-duct shall be used again and the cable-duct shall continue uninterrupted to the next designated splice point. All transitions from galvanized steel conduit to cable-duct shall be accomplished with the proper adapter. This adapter shall provide a durable, watertight transition that has a smooth uniform interior.

~~2. Cable Markers~~

~~Cable markers shall be in accordance with 807.08(a)2.~~

3. Cable Markers

The location of underground conduits or cable-ducts shall be marked with cable markers. The marker shall be placed at all changes in direction, where the underground distribution circuit is split, and at a maximum of 400 ft intervals on straight runs. Cable markers shall be a slab of concrete 2 ft square by 4 in. thick, with the word "Cable" die impressed into the surface of the marker, a minimum depth of 3/8 in. with letters a minimum of 2 in. high. Arrows showing the direction of the cable shall be die impressed or saw cut a minimum depth of 3/8 in. into the marker surface.

Curing of the concrete shall be in accordance with 702.22. The cable marker shall have a smooth metal trowel finish without scaling.

(~~c~~*b*) In Conduit Risers

Cable-duct shall enter the bottom of the conduit riser with a sweeping radius bend and continue up the riser to within 3 in. of the top of the conduit riser. At this point the plastic duct shall be terminated and the conductors shall continue uninterrupted and undamaged into the service cabinet, underpass switchbox, or through the weatherhead with sufficient excess to make the required connections.

(~~d~~*c*) Through Conduit in Bridge Coping

Where a cable-duct underground distribution circuit is run through conduit installed in bridge coping, the duct shall be cut away and the conductors shall be installed in the conduit with at least 2 ft of duct extended into the conduit. The conductors, through this

transition, shall be continuous between authorized splice points. Where more than one ~~lighting standard~~*light pole* is to be installed on the same side of the bridge structure and connected to the same distribution circuit, the cables pulled between these ~~lighting standard~~*light poles* shall be of the same type and size used in the cable-duct underground distribution circuit.

(e*d)* Aerial Cable

Aerial cable for overhead distribution circuits shall be supported and terminated as shown on the plans. The aerial cable shall have a sag of no more than 5% of the distance between lighting poles except where slack spans are indicated on the plans. Aerial cables shall have a minimum vertical clearance of 18 ft.

807.09 Lighting Handholes

Handholes shall not be placed in areas subject to flowing or ponding water. Handholes shall be installed with the top flush with adjoining surfaces. Precast handholes with integral bottoms will be considered acceptable.

Multiple compression fittings and insulating links installed in handholes shall be taped and waterproofed by application of an approved waterproofing device. The insulation around the area to be waterproofed shall be cleaned before applying the waterproofing device. These waterproofing devices shall be designed for insulating multi-conductor cables with a minimum voltage carrying capacity of 600 volts.

~~Heavy weave fiberglass reinforced polymer concrete service boxes will be allowed as an acceptable~~*Handholes of an alternative material will be allowed as a* substitute for a street and alley handhole providing that they *meet the requirements of 922.17(b) and* can be placed at a location which meets both of the following conditions:

(a) there is no evidence of vehicles traveling over the area where the handhole is to be located; and

(b) it is located a minimum of 15 ft from the edge of pavement, unless it is protected by guardrail, ~~un~~*non*-mountable curb, a structure, or an ~~un~~*non*-traversable ditch.

The handhole shall be backfilled with sand or earth containing no particles that would be retained on a 1/4 in. (6.3 mm) sieve. The backfill shall be placed as shown on the plans. No additional payment will be allowed for this backfill.

807.10 Concrete Foundations For ~~Lighting Standards~~*Light Poles*

Foundations shall be class A concrete in accordance with 702. Footings may be either round or square in shape as shown on the plans.

AGENDA

Anchor bolt circle dimensions shall be furnished and the anchor bolts shall be in accordance with 920.01(a)7. A rigid template shall be used to center the anchor bolts in the foundation. Unless otherwise specified, the template shall be oriented so that the mast arm of the ~~lighting standard~~*light pole* is perpendicular to the center line of the roadway.

Each foundation installation shall have provisions for grounding the ~~lighting standard~~ light pole in accordance with 807.12. The tops of the concrete foundations shall be constructed level and only shims used to rake the ~~lighting standard~~*light pole* will be allowed. Shims shall not be used with break-away couplings. Each foundation shall have an imprinted arrow or arrows on the top of the foundation to indicate the direction of the cable duct run.

Foundations for high mast towers shall be constructed prior to constructing foundations for conventional roadway lighting.

(a) Cast-in-Place Foundations

If the sidewalls of the excavated areas remain firm and stable, concrete may be poured directly against the dirt below the level of the top 6 in. form. Otherwise, the concrete foundation shall be fully formed by means of a paper preformed liner or other approved means. However, the foundation shall be formed to the proper size for the top 6 in. before concrete is poured. If a paper liner is used, it may be withdrawn as the concrete is placed or it may be left in place permanently. If the liner is left in place, all voids between the excavation walls and the form shall be filled and compacted using coarse aggregate No. 53. If the liner is withdrawn, the top 12 in. of the foundation shall remain formed until the concrete has obtained initial set.

(b) Precast Foundations

Precast foundations shall be complete with reinforcing bars, tie bars, anchor bolts, and entry sleeves located to provide a level mounting for the ~~lighting standard~~*light pole* after installation. The grounding coil, as shown on the plans, may be used for grounding ~~lighting standards~~*light pole* set on precast foundations. Foundation backfill shall consist of coarse aggregate No. 53.

(c) Grading of Foundations

Foundation projection above the finished grade shall be as shown on the plans. The excavated material may be used for this grading if it is not granular in nature and will readily stabilize and support the growth of sod. If the excavated material is unsuitable, it shall be properly disposed of and approved materials used. The area shall be sodded. Sodding will be in accordance with 621.

807.11 Placing ~~Lighting Standards~~*Light Poles*

AGENDA

REVISION TO STANDARD SPECIFICATIONS

SECTION 807 - HIGHWAY ILLUMINATION (various)
SECTION 920 - HIGHWAY ILLUMINATION MATERIALS (various)
SECTION 922 - TRAFFIC SIGNALS MATERIALS AND EQUIPMENT
922.17 Handholes

(a) ~~Lighting Standard~~*Light Poles* Under ~~80~~*45* ft in Height

The ~~lighting standard~~*light pole* assembly shall consist of a metal pole, a shoe base, a frangible breakaway base or coupling where shown on the plans, and a metal mast arm for attaching the luminaire. The unit shall be assembled on the ground. Pole circuit wiring shall be installed and the luminaire shall be attached prior to erection. The factory finish of the pole assembly shall be protected from mars, blemishes, scratches, or other damage. Slings and chokers for lifting purposes shall be of nylon or other approved material. Chains, metal rope, or other abrasive materials shall not be used for lifting devices. If damage to the factory finish occurs, repair or replacement shall be as directed.

The base plate shall be designed to carry the pole assembly. The plate assembly shall be supported by a transformer base, which shall be in accordance with the breakaway requirements in the AASHTO ~~Standard~~*LRFD* Specifications for Structure Supports for Highway Signs, Luminaires, and Traffic Signals.

After erection and attachment to the foundation, the pole assembly shall be plumb. The luminaires shall be level in both horizontal areas. Shims shall not be used with breakaway couplings. Shimming will be allowed on other types of installations to rake the pole assembly to obtain the desired attitude of the luminaire where the combined weight of the pole and mast arm requires it and the luminaire saddle will not allow the adjustment. The mast arm shall be perpendicular to the axis of roadway travel unless special orientation is noted on the plans. Unless otherwise specified, the lighting system shall consist of metal pole supports for the luminaires with an underground electrical supply system.

(b) High Mast ~~Lighting Standards~~*Towers* of ~~80~~*60* ft Height and Over

High mast ~~light~~*tower* pole sections shall be mechanically fitted in the field using factory supplied hydraulic jack or hoist puller that shall produce a minimum force of 10,000 lb per side. Field assembly procedures and assembly apparatus requirements shall be submitted for approval. Field welds will not be allowed except where shipping limitations prevent permanent factory assembly. Prior approval for field welds is required.

The pole shall be erected on the lower set of the anchor bolt nuts and secured with the top nuts. The adjustments to plumb the pole shall be made prior to the final tightening of the top nuts.

The pole shall be plumbed under no wind conditions before sun-up, after sun-down, or on an overcast day. The deviation from vertical shall not exceed 1/4 in. within any 10 ft of height.

When installing the high mast power cable, one end of the power cable shall be securely connected to the luminaire ring. The other end of the power cable shall be secured to the support and terminated 3 ft below this support with a heavy duty three-wire electrical plug. Adjustments of the three support cable lengths shall be made prior to lowering the

AGENDA

ring for the first time. After the support cables have been adjusted and the luminaires installed on the ring, at least one complete cycle operation of the ring shall be conducted on each structure.

As indicated on the plans should the ring provide more luminaire attachment positions than luminaires to be installed ballast of the same weight and effective projected area of the luminaire shall be installed on those positions.

807.12 Grounding

Ground wire shall be No. ~~6~~*4 AWG* solid bare copper. Ground rods shall be 1/2 in. diameter by 8 ft long copper weld ground electrodes except where larger sizes are specified. The top of the ground rod shall be driven at least 6 in. below grade. Ground rods shall not be installed within the ~~lighting standard~~*light pole*, sign structure, or high mast tower foundations.

The ground wire shall be connected to the top or side of the ground rod. The ground rod, ground wire connection shall be made by a thermo weld process. The wire and ground rod shall be free of oxidized materials, moisture, and other contaminates prior to inserting the wire and the ground rod into the properly sized mold. The welding material shall sufficiently cover and secure the conductor to the rod. The completed connection shall be non-porous.

As an acceptable substitute to this process, a mechanical ground grid connection of an approved type may be used. Tap type clamps, parallel type clamps, U-bolt flat clamps, and crossover clamps will not be accepted.

Luminaire ~~standards~~*poles* shall be grounded by connecting the free end of the ground wire to the grounding lug in the transformer base or pole. The free end of the ground wire shall enter the pole base through the entry sleeve installed in the foundation.

SECTION 807, BEGIN LINE 526, DELETE AND INSERT AS FOLLOWS:

807.13 Luminaires

(a) Installation

Luminaire installation shall consist of the physical placing of the luminaire. Each installation shall include the furnishing and placing of the light source as designated. Luminaires shall be compatible with other lighting materials as specified in 920.01.

1. Roadway Luminaires

Each luminaire shall be leveled in both directions in the horizontal plane after the light ~~standard~~*pole* has been erected and adjusted. Rotary adjustment of the mast arm and vertical adjustment of roadway luminaires to obtain an installed level position in both directions shall be accomplished by means of the bolted saddle arrangement used to attach

AGENDA

the luminaires to the mast arm. *For certain light source types such as metal halide* ~~Lamp~~*lamp* socket positions may be shown on the plans by type of Illuminating Engineering Society of North American, IES, and light pattern. The specified lamp socket position or comparable arrangement of LEDs shall be used to obtain the desired light pattern delivery. Proper connections shall be made to provide operation at the voltage being supplied. Replacements needed because of faulty or incorrect voltage connections shall be made with no additional payment. All roadway luminaires provided for an intersection, interchange, or contiguous highway segment shall be the same *type,* model*, and wattage*.

SECTION 807, BEGIN LINE 585, DELETE AND INSERT AS FOLLOWS:

4. High Mast Luminaires

The aiming of the luminaires shall be as shown on the plans. When the aiming process is being done the luminaire shall be oriented to conform to its raised position and the ring properly tethered to prevent rotation during the aiming adjustment. The long axis of the luminaire shall be parallel to the aiming direction indicated on the plans. All high mast luminaires provided for an interchange shall be the same model *and wattage*.

(b) Warranty

A non-prorated manufacturer's written warranty, against loss of performance, defects in materials and defects in workmanship, shall be provided to and in favor of the Department. ~~For roadway, underpass, and high mast luminaires, the~~*The* warranty shall cover a period of 10 years from the date of ~~installation~~*shipping* of the luminaire~~; for sign luminaires the period shall be five years~~. The warranty shall cover all components of the luminaire, including but not limited to ~~ballast,~~ driver, and light source. Loss of performance is defined to include, but is not limited to, the luminaire or any of its components falling out of compliance with the specification in place at the time of installation, which includes but is not limited to the following: there is no light output from 10% or more of the LEDs, ~~LED junction temperature exceeds 158°F under any circumstance,~~ the luminaire is operating below the lumen maintenance curve, or the color temperature shifts more than 500K outside of the specified color temperature range. The warranty shall stipulate that *repaired or* replacement luminaires shall be shipped to the appropriate Department District Office, at no cost to the Department, within 30 days after the manufacturer's receipt of failed luminaires. *Replacement luminaires shall be the same model or a model that is equal or better in terms of photometrics, energy consumption, and reliability.* Warranty documents shall include the manufacturer's name, address to which failed luminaires are to be shipped for replacement, contact person and contact person's telephone number and e-mail address. Warranty documents shall be submitted to the Engineer with the type C certification. Warranty documents shall provide the estimated life cycle of the lamp, LEDs, plasma emitter, and power driver.

REVISION TO STANDARD SPECIFICATIONS

SECTION 807 - HIGHWAY ILLUMINATION (various)
SECTION 920 - HIGHWAY ILLUMINATION MATERIALS (various)
SECTION 922 - TRAFFIC SIGNALS MATERIALS AND EQUIPMENT
922.17 Handholes

807.14 Sign, Underpass, Roadway, High Mast Lighting Location, and Luminaire Identification

All high mast towers, roadway light ~~standards~~*poles*, underpass lighting installations, and sign lighting installations shall have an identification code number as shown on the plans. In addition, each luminaire at a sign or underpass installation shall be individually identified with a single capital letter.

The code number shall be displayed on the light ~~standard~~*pole*, sign structure column, and high mast tower as shown on the plans. The underpass code number shall be displayed near the breaker box at a location as directed.

The code number for the ~~lighting standard~~*light pole* and sign structure column shall be applied to the pole, as specified by the manufacturer, by using individual, pressure sensitive, adhesive backed tags. The code number for the high mast tower shall be applied to an aluminum plate which is mounted with spacers away from the structure as shown on the plans.

A luminaire identification sticker shall be provided on each luminaire and on the light pole or tower that supports the luminaire. The sticker shall be titled "LUMINAIRE" and contain the following information: light source type, *luminaire* manufacturer, model, wattage, *LED or lamp model, power drive model, surge protection device model*, date of ~~installation~~*shipping*, and warranty period. The ~~pole/tower~~*luminaire identification* sticker shall be attached underneath the light pole/*tower* ID tag, shall face the roadway, and shall have 3/4 in. lettering, and be no greater than 8 in. by 8 in.

807.15 Service Point Power Entry

The utility's requirements for service locations shall be coordinated. Unless otherwise specified, a pole shall be furnished for the service point. If the utility requires metering *or is specified in the plans* of the lighting system, a meter socket shall be obtained from and installed in accordance with the requirements of the utility. Grounding shall be in accordance with 807.12 and shall be a part of the service installation.

SECTION 807, BEGIN LINE 667, DELETE AND INSERT AS FOLLOWS:

2. Type II Service Point

This service point installation shall consist of a service cabinet with a single galvanized steel or aluminum conduit riser to the weatherhead. A multiple number of galvanized steel conduits shall extend from the bottom of the service cabinet in accordance with 807.06. Underground cable-duct shall be installed in accordance with ~~807.07(c)~~*807.08(a)*. Connections, connectors, and fixtures shall be as shown on the plans.

The service cabinet shall be secured to the pole by means of a galvanized steel channel post or other approved device.

AGENDA

(b) Sign and Underpass Circuits

The illumination circuits for sign structures with an overhead power supply shall be protected by circuit breakers mounted on the end support.

Circuits for adjustable end support sign structures, bridge bracket signs, or underpasses shall be protected by circuit breakers mounted on the bridge or sign structure and connected to the underground distribution circuit in a handhole.

Circuits for sign structures with an underground power supply shall be protected by fuse connector kits in the base of the sign support. The fuse connector kits shall include bayonet disconnect features for the "neutral" side and "hot" side.

~~**(c) Multiple Relay Switches**~~

~~Unless otherwise specified, timber pole, multiple relay switches, service cabinet, photocells, photocell receptacles, weatherhead, conduit, and other miscellaneous items shall be furnished and installed as a part of the service point.~~

SECTION 807, BEGIN LINE 139, DELETE AND INSERT AS FOLLOWS:

(b) Testing and Inspecting Luminaires

The lighting system from the service point through the last luminaire shall be subjected to 14 days of normal operation prior to final acceptance. This testing procedure may be conducted separately on each circuit or on the entire system.

Normal operation is defined as the luminaires being on during the darkness hours and off during the daylight hours as controlled by the service point photocells and relay switches. Malfunctioning equipment shall be replaced or repaired before final inspection. The pattern of light *and correlated color temperature* delivered to the pavement by roadway, ~~and~~ high mast, *and underpass* luminaires will be inspected at night. At this inspection, the proper tools, equipment, and personnel shall be available to make all adjustments. These items shall specifically include a bucket truck capable of reaching all luminaires in the system, safety equipment, and a level to determine the proper luminaire position.

807.17 Pay Item and Installation Summary Sheets

Prior to final inspection, two sets each of installation summary and pay item summary, each marked Final Record, shall be furnished for the ~~lighting standards~~*light pole* as installed. The installation summary shall show the effective mounting height, *mast* arm length, foundation elevation, pay item, type of base, and catalog number or drawing for each ~~lighting standard~~*light pole* furnished. The pay item summary shall indicate the pay item, quantity, effective mounting height, *mast* arm length, and type of base for each type of ~~lighting standard~~*light pole* furnished.

AGENDA

807.18 Method of Measurement

Luminaire, ~~light standard~~*light pole* with ~~mast~~ *luminaire* arm, high mast ~~standard~~ *tower*, identification number, *connector kit, multiple compression fitting, insulating link,* foundation, handhole, service point, and cable marker will be measured by the number of units installed. Pole circuit conductor and circuit conductor in conduit will be measured by the linear foot. Pole circuit conductor will be measured from the base of the ~~lighting standard~~*light pole* to the terminal block of the luminaire. Pole line extension will be measured in a straight line between each pole.

Conductor in bridge conduit will be measured by the linear foot from end to end of conduit or from the end of conduit to the last bridge light pole foundation entry. An allowance of 5 lft will be made for each foundation entry. An allowance of 2 lft will be made for each junction box.

Removal of existing light structure, which shall include the pole, mast arm, and foundation, will be measured by the number of units removed.

Cable-duct and conductor in underground duct or conduit will be measured by the linear foot as follows:

(a) From the face of the concrete foundation to the center of the handhole or face of the next concrete foundation. An allowance of 5 lft will be made for each entry at foundations. An allowance of 2 lft will be made at handholes for connection purposes.

(b) From ~~lighting standard~~*light pole* bases or handholes to switch boxes at underpasses. An allowance of 4 lft will be made at the switch box for electrical connections.

(c) From end to end of the conduit when the cable is in conduit under a roadway surface or shoulder. No measurement will be made *for* cable-duct in conduit where it is part of a service point, sign installation, or underpass lighting system.

807.19 Basis of Payment

Luminaire will be paid for at the contract unit price per each for the type ~~and wattage~~ specified. Service point will be paid for at the contract unit price per each for the type specified. Light pole will be paid for at the contract unit price per each for the estimated mounting height, length of mast arm, and base type specified. *High mast tower will be paid for at the contract unit price for the specified mounting height.*

Lighting foundation, concrete, with grounding will be paid for at the contract unit price per each for the size specified. If class X material is encountered during lighting

AGENDA

foundation excavation, payment will be made for such excavation in accordance with 206. Partial payment for lighting foundation in the amount of 80% will be made if all such work is complete except for finish grading and sodding. The remaining percentage of payment will be made upon completion of the finish grading and sodding.

Connector kit will be paid for at the contract unit price per each for fused or unfused, as specified. Multiple compression fitting and insulation link will be paid for at the contract unit price per each for waterproofed or non-waterproofed, as specified. Cable-duct marker, high mast tower winch drive, and handhole, lighting will be paid for at the contract unit price per each. Sign, underpass, and roadway lighting location identification will be paid for at the contract unit price per each. Circuit installation will be paid for at the contract unit price per each for the type, structure number, and number of luminaires specified. Light structure, remove and portable tower lighting drive system will be paid for at the contract unit price per each.

Wire will be paid for at the contract unit price per linear foot for the designation, copper gauge, housing, and number of conductors specified. Pole circuit cable, type THWN, stranded will be paid for at the contract unit price per linear foot for the copper gauge and number of conductors specified. Conduit, steel, galvanized, 2 in. diameter will be paid for at the contract unit price per linear foot.

Payment will be made under:

Pay Item	**Pay Unit Symbol**
Cable, Pole Circuit, THWN, No. ____ Copper, Stranded, _____ _____/C	LFT
Cable-Duct Marker	EACH
Circuit Installation, Str. No. _____, _____ Luminaires	EACH
Conduit, Steel, Galvanized, 2 in.	LFT
Connector Kit, Fused	EACH
Connector Kit, Unfused	EACH
Handhole, Lighting	EACH
High Mast Tower, _____ft E.M.H.	*EACH*
High Mast Tower Winch Drive	EACH
Insulation Link, Non-Waterproofed	EACH
Insulation Link, Waterproofed	EACH
~~Light Pole, High Mast, _____ ft E.M.H.~~	~~EACH~~
Light Pole, ~~Roadway,~~ _____ ft E.M.H., _____ ft Mast Arm, _____ Base	EACH
Light Structure, Remove	EACH

Lighting Foundation, _____Concrete, with Grounding,
type
~~_____ in. x _____ in. x _____ in.~~ .....EACH
Luminaire, High Mast .....EACH
Luminaire, High Lumen Roadway.....EACH
Luminaire, Low Lumen Roadway .....EACH
~~Luminaire, Low Lumen-Low Mounting Height Roadway~~ .....~~EACH~~
Luminaire, Sign.....EACH
Luminaire, Underpass .....EACH
Multiple Compression Fitting, Non-Waterproofed.....EACH
Multiple Compression Fitting, Waterproofed.....EACH
Portable Tower Lighting Drive System.....EACH
Service Point, _____ .....EACH
type
Sign, Underpass, and Roadway Lighting
Location Identification .....EACH
Wire, _____, No. _____ Copper, in _____, _____ ____ /C.....LFT
designation *gauge* housing

The cost of lamps, LED arrays, plasma emitters, drivers, optical systems, weatherproof housings, surge protection devices, ~~and~~ electrical connections*, and installation of the luminaire on the pole* shall be included in the cost of luminaire.

The cost of the mast arm, J-support hook for pole circuit, handhole with cover, shoe base, transformer base or frangible coupling if required, installation *of the pole* on the foundation with the pole circuit, ~~and luminaire installation~~ shall be included in the cost of light pole.

The cost of the pole; lowering system including winch assembly, power cable, and support cable; concrete pad; luminaire ring; anchor bolts and nuts; lightning rod assembly; grounding system; and all incidental materials necessary to complete the installation shall be included in the cost of ~~light pole,~~ high mast *tower*. The cost of excavation, concrete, sleeves for cable-duct, non-metal pipe, reinforcing bars, backfill, finish grading, and sodding shall be included in the cost of lighting foundation.

The cost of wood poles, multiple relay switches, service cabinet, photocells, photocell receptacles, weatherhead, conduit, and other miscellaneous items shall be included in the cost of the service point.

The cost of aerial distribution service, drops to sign structures branching off from the pole line extension, weatherheads and risers required to connect the line extension to the underground electrical distribution circuit, all anchorage guy wires, hardware, aerial

AGENDA

cable, electrical connections, timber poles, and incidentals required to complete the pole line extension shall be included in the cost of cable, pole circuit.

The cost of snap-on coverings in light pole bases and waterproof coverings in underground handholes shall be included in the cost of multiple compression fitting.

The cost of circuit breakers; breaker enclosures; conduit; flexible conduit; conduit fittings; grounding; weatherhead; aerial cable termination; and incidentals required from the last luminaire to the point of attachment by the utility, the bottom of the riser at the structure base, or the connector kits in the base of the sign supports shall be included in the cost of circuit installation.

If not listed in the Schedule of Pay Items, the cost of connector kit, fused or unfused, multiple compression fitting and insulation link, waterproofed or non-waterproofed, shall be included in the cost of the other items.

The cost of maintaining highway illumination during the life of the contract shall be included in the cost of other pay items.

AGENDA

REVISION TO STANDARD SPECIFICATIONS

SECTION 807 - HIGHWAY ILLUMINATION (various)
SECTION 920 - HIGHWAY ILLUMINATION MATERIALS (various)
SECTION 922 - TRAFFIC SIGNALS MATERIALS AND EQUIPMENT
922.17 Handholes

The Standard Specifications are revised as follows:

SECTION 920, BEGIN LINE 1438, DELETE AND INSERT AS FOLLOWS:

920.01 Highway Illumination Materials

All luminaires, lamps, fuse kits, wire and cable, and major equipment shall be approved new material bearing the UL seal of approval or meet their standards.

Descriptive and technical literature shall be furnished for approval on all equipment prior to purchase and incorporation into the work.

Warranties for all major equipment shall be in accordance with 807.02.

(a) ~~Lighting Standards~~*Light Poles* and Arms, under ~~80~~*60* ft

1. General Requirements

Conventional ~~lighting standards~~*light poles* shall be aluminum or steel and shall be in accordance with AASHTO ~~Standard~~*LRFD* Specifications for Structural Supports for Highway Signs, Luminaires, and Traffic Signals.

For conventional light ~~standards~~*poles*, design wind velocity shall be ~~80~~*120* mph. The maximum horizontal deflection of the pole under maximum loading conditions shall not exceed a deflection angle of 1° ~~10"~~*40"* from the vertical axis of the pole for any 1 ft section of the pole along the entire length of the pole. ~~The maximum stress shall be 80% of the AASHTO Standard Specifications for Group I-DL loads~~*Poles shall be designed for the Service I, Service II, Extreme I, and Strength I load combination states. The light pole shall be designed to support an ice load of 3 lb/sq ft applied to the full perimeter of all members.* Vibration dampers shall be furnished as recommended by the manufacturer. The manufacturer may use drag coefficients based on actual wind tunnel tests; otherwise, they shall use the drag coefficients in Table ~~1.2.5c of Group I loads.~~ *3.8.7-1. The pole shall also be designed for the Fatigue I load combination state should signs or other appurtenances be specified for mounting on the pole.*

Conventional light ~~standards~~*poles* shall be designed to support a 53 lb luminaire with an effective *projected* area of 2.4 sq ft. When larger luminaires are specified, the light ~~standards~~ poles shall be designed to support the larger luminaires and this shall be shown on the light ~~standard~~ pole working drawings.

Conventional *light* poles shall have a 4 in. by 8 in. reinforced handhole centered 18 in. above the base of the pole, *unless installed with a transformer base,* and a cover attached with a minimum of two stainless steel hex head bolts. The pole shall have a removable pole cap and a wire support hook to support the vertical drop of the wire by a service drop clamp attached to the cable. A wiring hole with a 1 in. inside diameter grommet shall be provided where the *mast* arm is attached. Pole bases shall be designed for mounting on anchor bolts

AGENDA

equally spaced on an 11 1/2 in. or 14 1/2 in. diameter anchor bolt circle. Anchor bolt covers shall be furnished.

Hardware shall be type 304 or 305 stainless steel in accordance with ASTM *F593 or F594* ~~A 276~~, except where otherwise specified.

For conventional *light* poles, a 1/2 in. by 13 UNC threaded grounding nut or other approved method shall be provided near the bottom of and shall be accessible through the handhole for attaching the ground wire. The ground wire shall be No. 6 AWG soft-drawn, solid copper in accordance with ASTM B 3.

Mast arms less than 8 ft in length shall either be single member or truss type, except that mast arms *for poles* on bridge deck ~~light standards~~ shall be truss type. Single member arms shall be a tapered tube oval shaped at the pole end with the long dimension in the vertical plane, welded to a pole plate and bolted or clamped to the shaft with a minimum of four 1/2 in. bolts. Mast arms 8 ft and over in length shall be truss type. The upper member shall be a tapered tube oval shaped at the pole with the long dimension in the horizontal plane. The lower member may be standard pipe. Both members shall be welded to a pole plate and bolted or clamped to the pole. A minimum of four 1/2 in. bolts at the upper member and a minimum of two 3/8 in. bolts at the lower member shall be used if a pole plate configuration is used to attach the mast arm to the pole. Mast arms that are clamped to the pole shall have a minimum of four 1/2 in. bolts per clamp. Mast arms shall provide an enclosed raceway for the wiring and shall be free of burrs and rough edges. Each arm shall be furnished with a 2 in. nominal pipe size slipfitter. The maximum rise of the truss style arm shall be as set out in the table and shall be measured vertically from the centerline of the free end of the truss to a plane through the centerline of the upper arm bracket after loading.

Mast Arm Length, ft	Maximum Rise, ft
9 or less	4
10 to 14	5
15 to 19	5.5
20 to 25	6
26 to 30	8

Light ~~standards~~*poles* shall be constructed to provide a nominal luminaire mounting height above the roadway pavement as shown on the drawings. The elevations of foundations above or below the edge of the pavement shall be controlled by existing roadside conditions. The ~~proper shaft length~~*effective mounting height* shall be determined by field measurement prior to placing an order for the poles.

AGENDA

REVISION TO STANDARD SPECIFICATIONS

SECTION 807 - HIGHWAY ILLUMINATION (various)
SECTION 920 - HIGHWAY ILLUMINATION MATERIALS (various)
SECTION 922 - TRAFFIC SIGNALS MATERIALS AND EQUIPMENT
922.17 Handholes

A variation in the nominal mounting height of ±1 ft is allowed so that the "Effective Mounting Height", foundation to luminaire, of the light ~~standards~~*poles* may be supplied for 40 ft nominal mounting height.

Elevation of Foundation Top with Respect to the Near Road Edge, ft	Effective Mounting Height, Foundation to Luminaire, ft
+7.00 to +5.01	34
+5.00 to +3.01	36
+3.00 to +1.01	38
+1.00 to -1.00	40
-1.01 to -3.0	42
-3.01 to -5.00	44
-5.01 to -7.00	46

The effective mounting heights for other nominal mounting heights deviate from the table by the difference in ~~the~~ nominal ~~heights~~*height and 40 ft*.

2. Aluminum ~~Lighting Standards~~*Light Poles*

a. Round Seamless

The pole and mast arm shall be in accordance with ASTM ~~B 241~~ *B 221*, alloy ~~6063-T4~~ *6063-T6,* and of sufficient diameter and wall thickness to withstand the design loads. The pole shall be tapered full length or tapered in the middle with the top or bottom approximately 1/3 of the pole of constant cross section. The minimum wall thickness for poles on breakaway couplings and steel slip bases shall be 0.219 in. Poles on transformer bases or shoe anchor bases installed without breakaway devices are exempted from this minimum wall thickness requirement. An inner tube extension, or sleeve, fitted inside the main tube shaft, is permissible to increase the wall thickness of the shaft starting at the bottom of the shoe base and extending upward towards the top of the pole. The sleeve or tube extension shall be no less than 3 ft in length, fabricated from aluminum alloy 6063-T4 and heat treated to produce a T6 temper after placing in the shaft. The minimum wall thickness of the combination of shaft and sleeve shall be 0.219 in. Attaching plates or clamps for aluminum mast arms shall be in accordance with ASTM B 241, alloys 6061-T6, 6063-T6, 356.0-T6, or 5052-H32. The bottom end of the shaft shall be welded to a one-piece cast aluminum shoe anchor base of 356.0-T6 aluminum alloy in accordance with ASTM B 26 for sand castings or ASTM B 108 for permanent mold castings or equal and provided with four slotted holes for anchor bolts and the shaft's full length shall be heat treated to produce a T6 temper. The top of the shaft shall be provided with a removable aluminum pole cap. The shaft shall have no longitudinal welds. After fabrication, the shaft shall be cleaned to a satin finish and wrapped for protection during shipping and handling.

AGENDA

b. Single Longitudinal Welded

The material for these lighting ~~standards~~*poles* shall be round, tapered structural marine aluminum sheet in accordance with ASTM B 209, alloy 5086-H34, and of sufficient diameter and wall thickness to withstand the design loads. The minimum wall thickness for poles on breakaway couplings and steel slip bases shall be 0.219 in. Poles on transformer bases or shoe anchor bases installed with no breakaway devices are exempted from the minimum wall thickness requirement. The anchor base shall be one-piece cast aluminum in accordance with ASTM B 26, alloy 356.0-T6. The base casting for the formed and welded shaft shall be designed to be inserted a minimum of 12 in. into the shaft and bonded to the shaft with a weatherproof structural epoxy adhesive that fully develops the required strength as specified by the design criteria. After fabrication, the shaft shall be cleaned to a satin finish and wrapped for protection during shipping and handling.

~~**3. Stainless Steel Lighting Standards**~~

~~Stainless steel lighting standards *light poles* shall be fabricated from stainless steel in accordance with ASTM A 666, type 201, that has a minimum yield point of 68,000 psi. Welds other than spot welds shall be performed with conventional welding equipment and with stainless steel welding rods. Welds shall be free of cracks and pores. The wall thickness and diameter of the pole shall be sufficient to withstand designed loads. Exposed surfaces of the standard shall be smooth and free from marks or imperfections. During shipment, the poles and mast arms shall be protected with a non-staining protective material to preserve the finish.~~

4*3.* Galvanized Steel ~~Lighting Standards~~*Light Poles*

The pole and base plate shall be fabricated from steel in accordance with ASTM A 572, A 595, or A 1011 with a minimum yield strength of 50,000 psi. Single member mast arms and the upper members of truss type mast arms shall be fabricated from steel in accordance with ASTM A 572 or A 595 with a minimum yield strength of 50,000 psi. The lower member of truss type arms may be fabricated from standard steel pipe in accordance with ASTM A 53 with a minimum yield strength of 36,000 psi. After fabrication, the pole and mast arm shall be thoroughly cleaned and galvanized in accordance with ASTM A 123.

Steel ~~standards~~*poles* shall be tapered 0.14 in./ft and shall be round, octagonal, or dodecagonal. The design load shall be used to determine the pole diameter and wall thickness- *design calculations stamped by an Indiana registered professional engineer shall be submitted with the working drawings*. The pole shall have one longitudinal electrically welded joint. A steel base plate shall be welded to each pole and provided with four slotted holes for the anchor bolts.

All welds on steel ~~standards~~ *poles* shall be performed at the factory. Base plate welds shall be 100% penetration. Circumferential welds shall be backed-up welds with 100% penetration. Longitudinal welds shall be a minimum of 60% penetration. The 100%

penetration welds shall be ultrasonically inspected and all other welds shall be inspected by magnetic particle. Welding shall be performed in accordance with 711.32.

~~5~~*4*. Timber ~~Pole Lighting Standards~~*Light Poles*

Timber poles for highway ~~lighting standards~~*light pole* shall be in accordance with 922.10(b).

~~6~~*5*. Frangible Breakaway Bases

All light ~~standards~~*poles*, except high mast towers, ~~and~~ those protected by bridge end bents or retaining walls, *and those placed along sidewalks, pedestrian pathways, and bicycle pathways* shall be installed on breakaway devices. All breakaway devices on a contract shall be of the same type and manufacturer.

Breakaway devices shall be in accordance with AASHTO Standard *LRFD* Specifications for Structural Supports for Highway Signs, Luminaires, and Traffic Signals as modified in 920.01(a)1.

A certification from the manufacturer shall be furnished with the shop drawings stating the breakaway devices conform to the breakaway criteria of the AASHTO ~~Standard~~ *LRFD* Specifications for Structural Supports for Highway Signs, Luminaires, and Traffic Signals.

a. Cast Aluminum Transformer Base

The anchor bolts for transformer bases shall be in accordance with 920.01(a)7. The anchor bolt circle for transformer bases shall be 15 in. The bolt holes in the transformer base may be slotted. The pole shall be bolted to the transformer base with four 1 in. diameter galvanized steel bolts.

An approved handhole in the transformer base may be substituted for the 4 in. by 8 in. handhole specified in 920.01(a)1.

b. Breakaway Coupling

Breakaway couplings may be used with aluminum poles with mounting heights up to 50 ft and with steel poles that weigh 600 lb or less. The couplings shall be furnished with necessary hardware including a two-piece cover. Couplings shall be installed in accordance with the manufacturer's instructions and recommended clearance between the top of the foundation and the bottom of the breakaway coupling.

~~7~~*6*. Anchor Bolts

Anchor bolts shall be 1 in. with 8NC rolled threads in accordance with ASTM A 307. The minimum length of threads shall be 6 in. Mean diameter of rod stock shall be 0.918 in. ±0.011 in. and out-of-round tolerance shall be ±0.012 in. The top 10 in. of the bolt shall be galvanized in accordance with ASTM ~~A 153~~ *F2329 or mechanically*

AGENDA

galvanized in accordance with ASTM B695, Class 55. Anchor bolts, nuts, and washers shall be in accordance with 910.19(b). The bolts shall be a minimum of 36 in. in length for poles 8 in. outside diameter or less and 48 in. in length for poles 9 in. or 10 in. outside diameter. In addition to the minimum length, the bolt shall have a 4 in. right angle bend at the unthreaded end. The anchor bolts in bridge structures shall be as shown on the plans.

(b) High Mast ~~Standards~~*Towers* ~~of 80 ft~~*60 ft* and Over

The high mast pole, base, anchor bolts, lowering device, installed fixtures, and associated appurtenances shall be designed to withstand a minimum wind speed of ~~90 mph, gust of 117 mph,~~ *120 mph* using applicable design criteria in accordance with AASHTO ~~Standard~~ *LRFD* Specifications for Structural Supports for Highway Signs, Luminaires, and Traffic Signals. Minimum design criteria for *high mast tower heights from 60 ft to 120 ft* ~~each fixture~~ shall be an effective projected area of ~~2.8~~*14.70* sq ft and a weight of ~~85 lb~~*740 lb to account for 6 luminaires and a 6 place lowering ring. Criteria for high mast tower height from 125 ft to 200 ft shall be an effective projected area of 26.70 sq ft and a weight of 1065 lb to account for 12 luminaires and a 12 place lowering ring.* If larger fixtures are used, the actual size and weight shall be used in the design of the pole.

The Contractor shall be responsible for the accuracy of the dimensions and the proper fit of all material and equipment furnished with the pole. The Contractor shall provide all applicable manufacturers' warranties for material and workmanship. External lowering devices shall be designed to attach to the pole as shown on the plans. The pole shall include the mounting accommodations as shown on the plans.

1. High Mast Poles

The poles shall be tapered shafts having poly-sided or circular cross sections. The pole shaft sections shall be slip fitted and shall provide at least 1 in. radial clearance from all interior devices.

All tower shaft components shall be fabricated from high strength, low alloy, steel in accordance with AASHTO M 270; ASTM A595, grade A or B; ASTM A572, grade 55; ASTM A1011; ASTM A606, or ASTM A656, with a minimum yield strength of 50,000 psi.

Sections which are slip fitted shall have slip joints with a minimum overlap of 1.5 times the diameter of the bottom of the upper section at the slip joint. Towers having slip joint construction shall be match marked at the factory and shall be shipped disassembled for assembly at the work site. Slip joints shall be marked to ensure that the 1.5 times diameter insertion is provided.

All steel used in the base plate and shaft shall meet an impact property of 15 ft·lbs at 40°F in the longitudinal direction using the Charpy V-Notch test. This shall be an average of three tests per mill heat with no test below 10 ft·lbs. A copy of the certified mill test

AGENDA

reports for this steel and the Charpy V-Notch test results shall be submitted. Sufficient information shall be furnished to demonstrate that this material is traceable to the mill heat number shown on the test report.

All tower shaft hardware including hardware for the handhole door, and the latch mechanism shall be ~~stainless~~ *alvanized* steel in accordance with ASTM ~~A 276, type 304 or 305,~~ *A153* except where otherwise specified.

After fabrication, the pole shall be cleaned and galvanized. Galvanized steel towers, including the handhole, handhole door, base plate, mounting plate, and all other elements welded to the shaft shall be hot-dip galvanized in accordance with AASHTO M 111 *or ASTM A123*.

SECTION 920, BEGIN LINE 277, DELETE AND INSERT AS FOLLOWS:

3. Handholes

Openings for handholes shall be reinforced to maintain the design strength of the pole. The handhole shall have a weatherproof gasket made of neoprene or silicone rubber. The gasket shall be formed for a forced fit around the handhole or be attached by mechanical means. ~~Samples of the gaskets shall be furnished for approval.~~ The door and hinges shall be the same type steel as the poles. The hinge pins and other securing hardware shall be stainless steel and tamperproof. The door shall be fabricated to allow for a padlock, which is not included in the hardware. The hasp used for padlocking shall be fabricated from stainless steel. Provisions shall be made to bolt the door securely shut. The door shall include a bugproof and weatherproof aperture with a minimum opening of 4 sq in. Nylon or non-corrosive screens, or other approved methods of bug proofing shall be furnished. Two bonding plates shall be furnished which are accessible through the pole handhole for connecting the ground wires. A connection shall be furnished for an additional ground wire on the outside of the pole near the base plate.

4. Luminaire Ring Assembly

The ring shall be fabricated from ASTM A666, type ~~201 or~~ 304 stainless steel or *from AASHTO M 270; ASTM A595, grade A or B; ASTM A572, grade 55; ASTM A1011; ASTM A606, or ASTM A656, with a minimum yield strength of 50,000 psi. and hot dipped galvanized in accordance with AASHTO M 111* and shall have a removable raceway cover. The ring shall be fabricated as an enclosed wire raceway to provide for the symmetrical mounting of the luminaires. All structural connections shall be made with bolts and nuts.

The luminaire ring shall be supported by means of stainless steel aircraft cables of seven strands with 19 wires per strand with a minimum breaking strength of 3,700 lb.

Luminaire rings shall be provided with either 6 or 12 - 2" dia pipe fittings for luminaire attachment. The number of luminaires and their positions on the ring will be

AGENDA

indicated on the plans. Rings with asymmetrically mounting of luminaires shall be provided with counterweights that result in an even weight distribution across any axis.

5. Head Frame Assembly

The head frame shall be made of ASTM A666, type 201 or 304 stainless steel *or of galvanized steel in accordance with AASHTO M 270; ASTM A595, grade A or B; ASTM A572, grade 55; ASTM A1011; ASTM A606, or ASTM A656, with a minimum yield strength of 50,000 psi and hot dipped galvanized in accordance with AASHTO M 111*. All required pulleys, rollers, or sheaves and shafts shall be constructed from non-corrosive metallic materials. No component shall be used in the lowering device in excess of its rating or in violation of the component manufacturer's recommendation. This requirement shall be applicable, but not limited to, the compatibility of the cables and sheaves. There shall be three supports for the suspension cables. A roller system or one compatible sheave for the power cable shall be located mid-point between two of the suspension supports. To prevent the cables from riding out of the grooves, cable guides shall be provided. The suspension cable sheaves shall have a minimum pitch diameter of 3 1/2 in. and the power cable sheave or individual rollers in a roller assembly shall have a minimum pitch diameter of 18 1/2 in. and shall be grooved to fit the power cable.

SECTION 920, BEGIN LINE 378, DELETE AND INSERT AS FOLLOWS:

9. Lightning Rod Assembly and Grounding System

The lightning rod, air terminal, shall shield the head frame assembly cover and the outer edge of the luminaires within a 45° electrostatic shielded cone. The grounding system shall include bonding plates, grounding clamps, four ~~5/8 in. diameter by 12 ft~~ copperweld grounding rods, a grounding conductor ~~with a minimum size of 28 strands of 14 gauge bare copper wire in rope lay configuration, 9/16. diameter with a weight of copper of 375 lb per 1,000 ft~~, air terminal, lightening rod and other incidental connectors. All hardware shall be stainless steel, brass, copper, copper alloy, or equally corrosion-resistant metal.

Bonding plates, with a minimum contact surface area of 8 sq in., shall be installed at locations shown on the plans. The bonding plates shall be welded to the tower shaft during the time of manufacturing. The grounding conductor shall be secured to the bonding plates by a two-bolt pressure plate clamp connector having a minimum of 4 in. of contact with the copper. At the point of termination the grounding conductor shall extend beyond the bonding plate a minimum of 3 in.

Each ground rod clamp shall have a minimum of 1 1/2 in. of contact between the grounding conductor and the ground rod. The grounding conductor shall be continuous between the bonding plates inside the tower shaft handhole and the grounding rod termination point.

Bends of conductors shall form an angle of 90° or more. Unsupported conductors shall have a radius of bend 8 in. or greater.

AGENDA

10. Anchor Bolts

Anchor bolts for high mast poles shall be furnished in a pre-clustered form and shall be a hooked deformed reinforcing bar or a hooked smooth bar. The bolts shall be in accordance with ASTM A 615 modified to a minimum yield strength of 75,000 psi. The top 12 in. of each anchor bolt, nut, and washer shall be galvanized in accordance with ASTM A 153 or be mechanically galvanized and in accordance with the coating thickness, adherence, and quality requirements of ~~ASTM A 153, class C~~ *ASTM B695, class 55.*

(c) Wire and Cable

Lighting circuit cables for direct burial shall be enclosed in polyethylene conduit.

1. Polyethylene Conduit

This conduit shall be in accordance with ASTM D 3485 either medium density type II, class C or high density type III, class C smooth wall, coilable polyethylene conduit for preassembled wire and cable. *The diameter of the conduit shall be 1 1/4 in for the standard 4-no.4 conductor cable.*

~~The size of the conduit for different cable conductor sizes shall be as follows.~~

~~Size~~	
~~Cable Conductor~~	~~Conduit~~
~~3-1/C No. 4~~	~~1 1/4 in.~~
~~3-1/C No. 2~~	~~1 1/2 in.~~
~~3-1/C No. 1/0~~	~~2 in.~~
~~3-1/C No. 3/0~~	~~2 in.~~

2. Conductors in Cable-Duct

The cable shall consist of ~~three~~*four* separate electrically insulated conductors installed in the duct so any one conductor may be easily removed without damage to the other two. The conductors shall not be cabled or twisted together. The conductors shall be stranded copper of the *No. 4* AWG size ~~specified~~. Conductor*s* ~~sizes No. 8 AWG and larger~~ shall be stranded in accordance with ASTM B 8, class B.

Each conductor shall be insulated with crosslinked polyethylene manufactured in accordance with Insulated Power Cable Engineer Association ~~publication S66-524~~*standard WC 70/ICEA S-95-658-1999, Nonshielded 0-2kV Cables*. Each conductor shall have the following characteristics: a 600 volt rating; UL listed; an XHHW conductor temperature rating not to exceed 90°C in dry locations; and not to exceed 75°C in wet locations.

AGENDA

Each of the ~~three~~*four* conductors shall be imprinted at regular intervals with the following description: Type XHHW; 600 volt; UL; the conductor's AWG size and metal or alloy; the manufacturer's name, trademark, or other distinctive marking by which the product can be readily identified.

Identification coding of the conductors shall be accomplished by complete color coding ~~or by ribbing of the insulation~~. Color coding of the insulation shall be homogeneous throughout the entire depth and length of the jacket. The colors shall include one black, one white, ~~and~~ one red, *and one green*. ~~Ribbing shall consist of one non-ribbed conductor, one single-ribbed conductor, and one double-ribbed conductor. The same method of conductor identification coding shall be used throughout the project~~.

3. ~~Lighting Standard~~*Light Pole* Circuit Wiring

This wiring shall consist of two 1/C No. 10 AWG, 600 volt, THWN or MTW insulation, stranded copper wire.

4. Sign and Underpass Wiring

The wiring from the switch box to the last luminaire shall be 3/C copper stranded No. 10 AWG conductors and shall have imprinted at regular intervals along the length of the insulation jacket the following designation: No. 10 AWG, type MTW ~~or THHN~~ or THWN or Gasoline and Oil Resistant II or AWM, 600 volt, UL. The conductor classifications shall be UL listed and have the following minimum temperature ratings: MTW 90°C; ~~THHN 90°C~~; THWN 75°C; and AWM 105°C. It shall be installed in 3/4 in. conduit between the breaker box and luminaires.

5. Aerial Cable

This cable shall be triplex secondary distribution cable consisting of two insulated conductors and a steel reinforced bare copper messenger neutral. The insulated conductor shall be No. 6 AWG stranded copper with 600 volt, XHHW-XLP type insulation.

6. High Mast Tower Luminaire Ring Conductors

The wiring from the terminal box on the ring through the last luminaire shall be in accordance with 920.01(c)4.

7. Power Cable-High Mast *Tower* Poles

The power cable shall be a 4/C No. 10 AWG copper insulated electrical cable type "SO" modified for a repetitive reeling operation. It shall be in accordance with ASTM B3, ASTM B173, and IPCEA S-19-83. Conductor insulation shall be in accordance with ASTM D~~1691~~*1693* and IPCEA S-19-81, Paragraph 3.12. The sheath or jacket shall meet or exceed IPCEA S-19-81, Paragraph 7.6.20.1.1. Conductors shall be color coded.

AGENDA

The power cable shall have a heavy-duty 600 volt, AC 30 amp rated electrical plug capable of disconnection in a safe manner under load conditions. The electrical plug shall be moisture resistant and waterproof at both transition points.

8. Electrical Connectors

Connectors shall be a compression type of the proper size with only one conductor per groove in the fitting. They shall be designed specifically for use on aluminum and copper conductors, prefilled with an oxide inhibitor and installed with a hydraulic tool according to the manufacturer's specifications. After installation, the connectors shall be fully insulated and weatherproofed. The connectors installed in underground handhole shall be taped and then waterproofed as shown on the plans.

(d) Luminaires

Underpass, Roadway, and High Mast models shall be selected from the Department's list of approved solid state luminaires.

1. General Requirements

Luminaires shall be compatible with the lighting materials specified in this section and in the plans. Luminaires, including primary fuse protection, surge protection devices, power drivers, and other major components, shall be rated for a minimum operational life of 50,000 hours at 77°F.

Luminaires shall be a single, self-contained device, not requiring on-site assembly for installation. Connectors shall be crimp *or cage-clamp* type.

All internal components shall be adequately supported to withstand mechanical shock and vibration. Luminaires shall be tested in accordance with ANSI C136.31, 2G loading or ANSI C136.31, 3G loading for luminaires on bridges. Testing about all axes shall be accomplished with a single luminaire.

Luminaires shall include gasketing that will completely seal out dust, moisture, and insects from the interior of the optical assembly and retard the formation of an undesirable film from gaseous vapors on the interior of the optical assembly. The optical assembly shall be rated at IP 66 or better in accordance with ANSI/IEC 60529 while ~~ballasts,~~ power drivers and surge protection devices shall be rated at IP 65 or better.

Light sources supplied for luminaires shall be electrically compatible with the luminaires. Luminaires shall include an integrally built in power driver. The luminaire shall operate satisfactorily in temperatures from -40°F to 122°F with an input voltage variation of ±10% of the rated operating voltage specified. Power consumption, wattage, shall not exceed that which is shown on the plans. The luminaire power factor shall be 0.9 or greater. ~~Power drivers shall maintain constant current and have a minimum Mean Time to Failure of 2,000,000 hrs as determined by Telcordia SR-332, issue 3 or MIL-HDBK-217F~~

AGENDA

~~methodology~~ *The power driver, or combination of power drivers if more than one is used in the luminaire, shall have a Mean Time To Failure (MTTF) of 1,000,000 hrs. as determined by Telcordia SR 332, Issue 3 or MIL-HDBK-217F methodology. The MTTF estimate shall be of the driver as complete and functioning unit.* Total Harmonic Distortion, THD, of the power driver shall not exceed 20% as verified by ANSI C82.77.

Roadway lighting luminaires shall have a precision-cast aluminum housing with weatherproof finish.

Refractors or lenses shall be scratch resistant and made from high impact, heat-resistant, glass or UV inhibited, high impact *polycarbonate* plastic. If utilized, reflectors shall be detachable and made of highly specular aluminum.

Luminaires shall have seven wire photocontrol receptacle in accordance with ANSI C136.41 with shorting cap for adaptive lighting control.

Luminaires shall exhibit a color temperature in the range of 3500K to 4500K per ANSI C78.377 and a minimum Color Rendering Index of 70 as verified by the IESNA LM-79 test.

A Surge Protection Device, SPD, shall be included to protect the luminaire from damage and failure from transient voltage and currents. The SPD shall conform to UL 1449 and shall be tested in accordance with, and survive, the procedure in ANSI/IEEE C62.41.2 definitions for standard and optional waveform for location category C-High. Once the surge current has subsided, the SPD shall automatically restore normal operation and reset to a state ready to receive the next surge.

Luminaires shall comply with Title 47 CFR Part 15, Class A on unlicensed transmissions in a business, commercial, or industrial environment.

Underpass and post top mounted luminaires shall be protected against salt spray and conform to ASTM B117, 2,000 hrs time horizon.

Luminaires shall include vandal shields when installed on an underpass or signs on bridge brackets and when otherwise specified. The vandal shield shall be made of a tough durable plastic, such as Lexan, mounted in a rugged galvanized steel or aluminum frame, and shall withstand severe impact without being damaged or allowing the refractor to be damaged. It shall be fastened securely to the luminaire so it cannot be removed from the outside and shall not interfere with the light distribution pattern. It shall protect the face of the refractor and if ventilation is necessary, the ventilating apertures shall be arranged so that they do not admit a probe of a diameter greater than 1/4 in.

Luminaire shall be aimable to the required direction

AGENDA

a. LED Luminaires

LEDs shall be connected so that the loss of one LED will not result in the loss of the entire luminaire. LED circuitry shall prevent flickering to the unaided eye at the voltage specified on the plans and the range indicated herein. ~~LED junction temperature shall not exceed 158°F~~.

LEDs shall deliver a minimum of 85% of the initial rated lumens after 50,000 hours of operation at 130°F ambient temperature as indicated by LM-80 lumen maintenance test of the light source as calculated by IESNA TM-21, L85 > 50,000 hrs.

A passive thermal management system to dissipate the heat generated by operation shall be provided. Fans or other mechanical cooling systems shall not be used. *The thermal management system shall maintain temperatures during the operation of the luminaire to be within the limits established by the Power Driver Lifetime and LM-80 testing.*

b. Light Emitting Plasma Luminaires

Plasma emitters shall deliver a minimum of 70% of the initial lumens after 50,000 hrs of operation.

c. Metal Halide Luminaires

Metal halide luminaires shall utilize a power driver; external capacitors or igniters shall not be used. Metal Halide lamps used in high mast luminaires shall be supported at both ends with mechanical spring grips or other means to hold the lamp secure against vibration.

2. Roadway Lighting Luminaires

Roadway luminaires shall have a strong, easily operated, positive latch on the street side of the housing with a hinge and a safety catch that prevents accidental unhinging on the house side of the refractor or lens holder. They shall include a four bolt slipfitter capable of adapting to a 2 in. mounting bracket that is adjustable ±5° for leveling.

Luminaires shall be adjustable in the horizontal and vertical directions to meet the specified IESNA light distribution pattern. Luminaire weight shall not exceed 53 lbs and its projected area shall not exceed 2.4 sq ft.

3. Sign *and Underpass* Luminaires

Sign *and underpass* luminaires shall be LED and operate on no more than ~~250W~~ *150W* of power. Sign luminaires shall have a shield that blocks the view of the refractor from an approaching motorist. This shall be accomplished by the design of the housing or by a shield fabricated from sheet aluminum, approximately 0.05 in. thick, and of sufficient size to be fastened onto the horizontal edge of the refractor holder with self-tapping screws and placed between the refractor and approaching traffic.

AGENDA

Aluminum and steel structural members for luminaire supports shall include aluminum conduit, conduit clamps, fittings, and stainless steel screws.

(e) Circuit Breakers and Enclosure

All circuit breaker enclosures shall be NEMA 4/5.

1. Circuit Breakers for Type II Service Point

The cabinet and hardware shall be weatherproof and rain tight. The enclosure shall have provisions for pad locking. The fastener and mounting hardware shall be plated brass, stainless steel, or aluminum. The enclosure shall be made of 14 gauge aluminum or 14 or 16 gauge stainless steel. The circuit breaker operating handles for manual tripping shall be concealed inside the enclosure. Computation of branch circuits shall be based on the National Electrical Code Standard Limitation of loading breakers to 80% of their rated current. Additional details shall be as shown on the plans.

2. Circuit Breakers for Sign and Underpass Circuits

Sign and underpass circuit protection shall be provided by two single pole 240 volt AC, 120 volt for 120/240 volt service, circuit breakers with ampere rating of 200% of the normal load. The circuit breakers shall have provisions for padlocking externally. The circuit breaker operating handles for manual tripping shall be concealed inside the enclosure. The enclosure shall be made of aluminum or stainless steel. Additional details shall be as shown on the plans.

3. Circuit Breakers for High Mast ~~Poles~~*Towers*

The enclosure shall be furnished with two single pole, 30 ampere, 480 volt AC circuit breakers with a minimum symmetrical RMS interrupting capacity of 14,000 amperes. The breakers shall be accessible through the pole handhole. The circuit breaker operating handles for manual tripping shall be external to the enclosure. The enclosure shall be made of aluminum or stainless steel. Additional details shall be as shown on the plans.

4. E-Series Magnetic Circuit Breakers

These breakers shall have the following features.

a. capable of 10,000 on-off operations;

b. interrupting capacity of 7,500 amperes;

c. temperature stable so as not to be adversely affected by temperature changes over their operating environment of -40°F to 185°F;

AGENDA

d. lug range 1/0 - 14 copper and 1/0 - 12 aluminum; and

e. trip on overload, even when handle is forcibly held in the ON position.

(f) Multiple Relay Switches with Photocell Receptacles

Multiple relay switches with photocell receptacles shall have a two-pole relay for connection to a 120/240 or 240/480 volt, three-wire, single phase, 60 Hz power supply. The relay switch components shall match the service voltage being supplied. The unit shall contain two single pole circuit breakers with a minimum rated capacity to withstand 100% of the rated ampere load. The circuit breakers shall trip at not less than 125% of the rated load capacity. Control circuit arresters for lighting protection and a manual control selector switch shall be included within the unit. The enclosure shall be a cast aluminum weatherproof case, with a hinged cover, having provisions for padlocking and a hanger for pole or wall mounting.

(g) Materials Certification

Unless otherwise specified, materials furnished under this specification require a type C certification in accordance with 916.

(h) Junction Box

The junction box shall be ~~polymer concrete, of concrete-gray color, with a cover rating of 20,000 lb~~ *in accordance with section 922.17(b) except cover shall be marked with logo imprints of "ROADWAY LIGHTING".*

AGENDA

REVISION TO STANDARD SPECIFICATIONS

SECTION 807 - HIGHWAY ILLUMINATION (various)
SECTION 920 - HIGHWAY ILLUMINATION MATERIALS (various)
SECTION 922 - TRAFFIC SIGNALS MATERIALS AND EQUIPMENT
922.17 Handholes

The Standard Specifications are revised as follows:

SECTION 922, BEGIN LINE 1438, DELETE AND INSERT AS FOLLOWS:

922.17 Handholes

(a) Type I (Concrete Handhole)

A Type I handhole shall be made of class III reinforced concrete pipe with a cast iron ring and cover. The concrete shall be in accordance with section 907.02. Reinforcement shall be provided as shown on the plans or in accordance with the manufacturer's design. If reinforcement deviates from the plans, provide calculations showing that the modified design supports HS-20-44 loading. The ring and cover for handholes shall be in accordance with 910.05(b).

(b) Type II (~~Polymer Handhole Concrete~~*Alternative Handhole*)

A Type II handhole shall be made of polymer concrete *or other material that is certified to be in accordance with ANSI/SCTE 77 and meet or exceed Tier 22 loading requirements.* ~~The handhole box of polymer concrete shall be reinforced with a heavy weave fiberglass~~. ~~The box and cover shall meet or exceed ANSI/SCTE Tier 15 requirements~~. The handhole shall be stackable.

1. ~~Polymer Concrete~~ Handhole Box

The handhole box shall be heavy duty. The inner surface of the handhole shall be smooth and free from cracks and imperfections.

2. ~~Polymer Concrete~~ Handhole Cover

The cover shall be marked with logo imprints of "TRAFFIC SIGNAL" and the ANSI/SCTE Tier rating - "TIER XX". The cover shall be secured with stainless steel, 300 series, 3/8 in., 16 NC hex bolts and washers. The cover shall have a friction coefficient of at least 0.5.

(c) Type III (Handhole located in the Roadway)

A type III handhole shall be AASHTO HS-20 rated. The handhole box shall concrete. The ring and cover shall be steel and shall be secured to the handhole box.

AGENDA

COMMENTS AND ACTION

SECTION 807 - HIGHWAY ILLUMINATION (various)
SECTION 920 - HIGHWAY ILLUMINATION MATERIALS (various)
922.17 Handholes

DISCUSSION:

Motion: Second: Ayes: Nays: FHWA Approval:	Action: ___ Passed as Submitted ___ Passed as Revised ___ Withdrawn
Standard Specifications Sections referenced and/or affected: 807 pg 870 thru 879; 920 pg 1081 thru 1095; and 922.17 pg 1130. Recurring Special Provision references in: NONE Standard Drawing affected: NONE Design Manual Sections affected: 502-4 GIFE Sections cross-references: NONE	___ 2022 Standard Specifications ___ Revise Pay Items List ___ Create RSP (No.___) Effective: RSP Sunset Date: ___ Revise RSP (No.___) Effective: RSP Sunset Date: ___ Standard Drawing Effective: ___ Create RPD (No. ___) Effective: ___ GIFE Update ___ SiteManager Update

AGENDA

PROPOSAL TO STANDARDS COMMITTEE

PROBLEM(S) ENCOUNTERED: The Standard Drawing series for flagger operations (E 801-TCFO) largely date back to 1997 and include details for work that does not include flagging. INDOT Standard Drawings E 801-TCFO-03, E 801-TCTC-09, and E 801-TCTC-10 depict mobile operations and should be combined into a new series just for mobile operations. Other sheets in the temporary closure series (801-TCTC) are duplicates of other drawings or show information that should be detailed in the plans.

PROPOSED SOLUTION: Revise and update the standard drawing series on flagger operations (E 801-TCFO) and create a new series for mobile operations (E 801-TCMO). Delete unnecessary and duplicate details from the temporary closure series (E 801-TCTC).

APPLICABLE STANDARD SPECIFICATIONS: 801.16

APPLICABLE STANDARD DRAWINGS: 2 series [E 801-TCFO and E 801-TCTC]

Proposed New (3)	Proposed Deletions (7)		Proposed Moves (3)
801-TCFO-01 Flagger Operations Index	801-TCFO-04	801-TCTC-05	801-TCFO-03 to 801-TCMO-02
801-TCFO-03 Flagger Operations < 50 mph	801-TCFO-05	801-TCTC-06	801-TCTC-09 to 801-TCMO-03
801-TCMO-01 Mobile Operations Index	801-TCFO-06	801-TCTC-07	801-TCTC-10 to 801-TCMO-04
		801-TCTC-08	

APPLICABLE DESIGN MANUAL SECTION: No
APPLICABLE SECTION OF GIFE: No
APPLICABLE RECURRING SPECIAL PROVISIONS: 801-T-209, see related agenda item.
PAY ITEMS AFFECTED: Yes

APPLICABLE SUB-COMMITTEE ENDORSEMENT: Yes, traffic standards subcommittee

IF APPROVED AS RSP OR RPD, PROPOSED BASIS FOR USE: N/A

IMPACT ANALYSIS (attach report): Yes, attached

Submitted By: Joe Bruno on behalf of Dave Boruff

Title: Sr. Engineer of Signals & Markings

Organization: INDOT Traffic Engineering Division

Phone Number: (317) 234-7949

Date: 1/25/2021

AGENDA

IMPACT ANALYSIS REPORT CHECKLIST

Explain the business case as to why this item should be presented to the Standards Committee for approval. Answer the following questions with Yes, No or N/A.

Does this item appear in any other specification sections? Yes
Will approval of this item affect the Approved Materials List? No
Will this proposal improve:

Construction costs? No

Construction time? No

Customer satisfaction? Yes

Congestion/travel time? No

Ride quality? No

Will this proposal reduce operational costs or maintenance effort? No

Will this item improve safety:

For motorists? Yes

For construction workers? Yes

Will this proposal improve quality for:

Construction procedures/processes? Yes

Asset preservation? Yes

Design process? No

Will this change provide the contractor more flexibility? No

Will this proposal provide clarification for the Contractor and field personnel? Yes

Can this item improve/reduce the number of potential change orders? Yes

Is this proposal needed for compliance with:

Federal or State regulations? No

AASHTO or other design code? No

Is this item editorial? No

Provide any further information as to why this proposal should be placed on the Standards Committee meeting Agenda: N/A

AGENDA

REVISION TO STANDARD SPECIFICATIONS AND STANDARD DRAWINGS

SECTION 801 - TRAFFIC CONTROLS FOR CONSTRUCTION AND MAINTENANCE OPERATIONS
801.16(b) Maintenance of Traffic for Mobile Operations

(Note: Proposed changes shown highlighted gray)

The Standard Specifications are revised as follows:

SECTION 801, BEGIN LINE 870, DELETE AND INSERT AS FOLLOWS:

(b) Maintenance of Traffic for *Flagging and* Mobile Operations

Signs, flagging, flashing arrow signs, and other required traffic control devices shall be furnished in accordance with the details shown on the plans or as directed. The Engineer reserves the right to stop work at any time to relieve traffic congestion.

Flagging operations shall be conducted under the supervision of either the designated CWTS or a flagger certified by ATSSA or approved equal certifying organization. The person supervising the flagging operation shall ensure that the flaggers are trained in proper flagging procedures and that the flagging operation is in ~~compliance~~ *accordance* with *107.12, the standard drawings, and* the applicable sections of the MUTCD.

AGENDA

REVISION TO STANDARD SPECIFICATIONS AND STANDARD DRAWINGS

E 801-TCFO-01 FLAGGER OPERATIONS (WITH MARKUPS)

Add index sheet and simplified sheet for flagger operation on two lane road with speed < 50 mph.

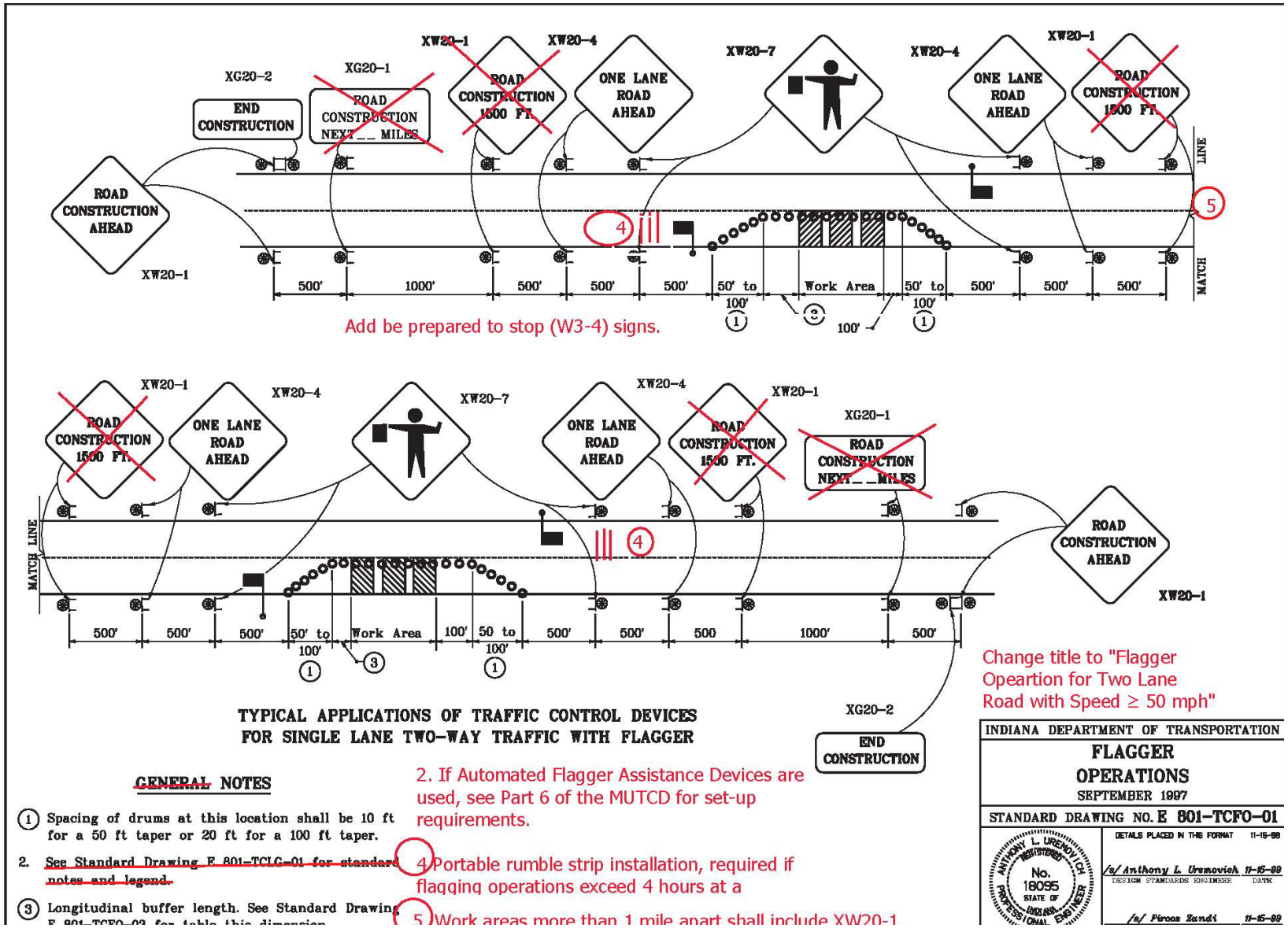

REVISION TO STANDARD SPECIFICATIONS AND STANDARD DRAWINGS

E 801-TCFO-02 MAINTENANCE OF TRAFFIC FOR MOVING OPERATIONS (WITH MARKUPS)

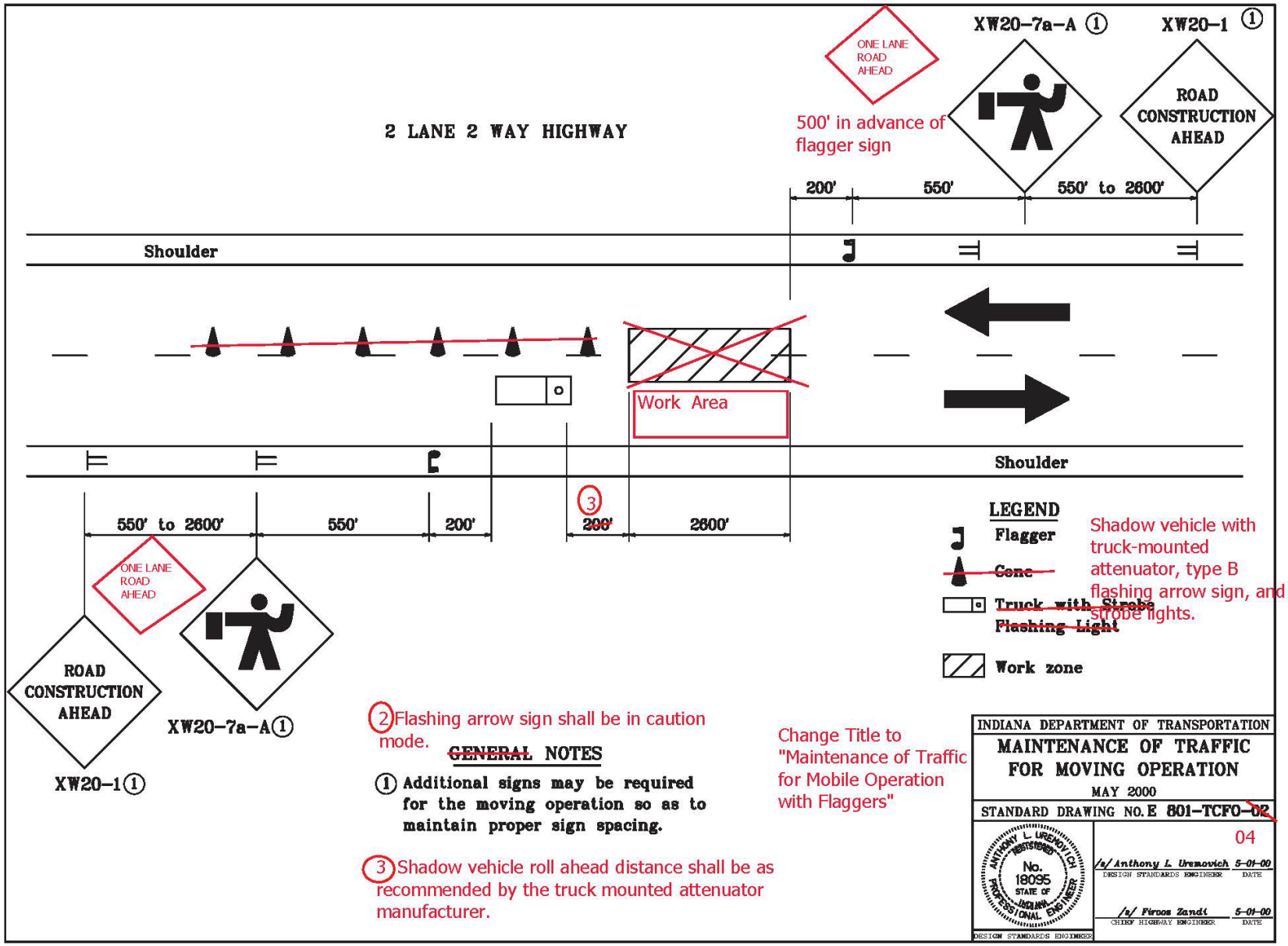

REVISION TO STANDARD SPECIFICATIONS AND STANDARD DRAWINGS

E 801-TCFO-03 MAINTENANCE OF TRAFFIC FOR REFLECTOR REPLACEMENT (WITH MARKUPS)

Create New Sheet for Flagging Operations < 50 mph similar to IMUTCD Figure 6H-10

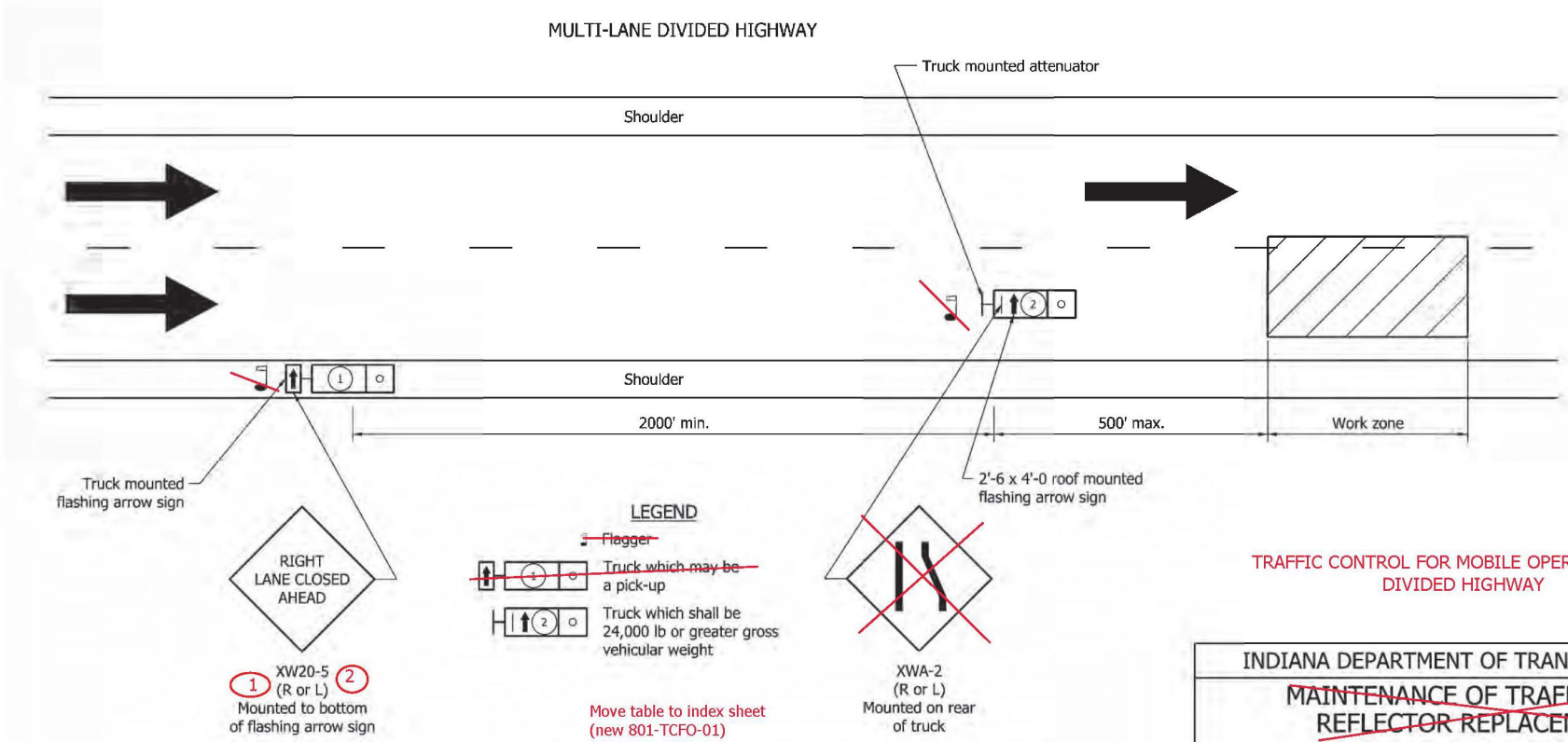

TRAFFIC CONTROL FOR MOBILE OPERATION ON A DIVIDED HIGHWAY

Move table to index sheet (new 801-TCFO-01)

GENERAL NOTES

1. Flagger shall be used while trucks are stopped.
2. Strobe lights will be require on all vehicles.
3. Distances shown are approximate and may be adjusted as directed.
4. Truck mounted attenuator shall be designed to attenuator impacts by a pickup truck of 4400 lbs. gross vehicular weight at 60 mph.

(move existing note 2 to index sheet)

1 Use XW20-5 sign if speed limit is > 35 mph.

2 If required, deploy additional shadow vehicle with XW20-5 sign 1/4 mi. in advance of any queue or as directed by the Engineer.

LONGITUDINAL BUFFER LENGTH SHOWN ON STANDARD DRAWING E 801-TCFO-01

Posted Speed Limit, mph	Length, ft
30 or lower	80 200
35	115 250
40	180 305
45	230 360
50	280 425
55	350 495
60	410
65	500

INDIANA DEPARTMENT OF TRANSPORTATION

MAINTENANCE OF TRAFFIC FOR REFLECTOR REPLACEMENT

SEPTEMBER 2009 TCMO-02

STANDARD DRAWING NO. E 801-TCFO-03

RICHARD L. VanCLEAVE REGISTERED No. 9750 STATE OF INDIANA PROFESSIONAL ENGINEER

DESIGN STANDARDS ENGINEER

/s/ Richard L. VanCleave 09/01/09
DESIGN STANDARDS ENGINEER DATE

/s/ Mark A. Miller 09/01/09
CHIEF HIGHWAY ENGINEER DATE

REVISION TO STANDARD SPECIFICATIONS AND STANDARD DRAWINGS

E 801-TCFO-04 TRAFFIC CONTROL FOR OVERHEAD SIGN INSTALLATION (WITH MARKUPS)

DELETE

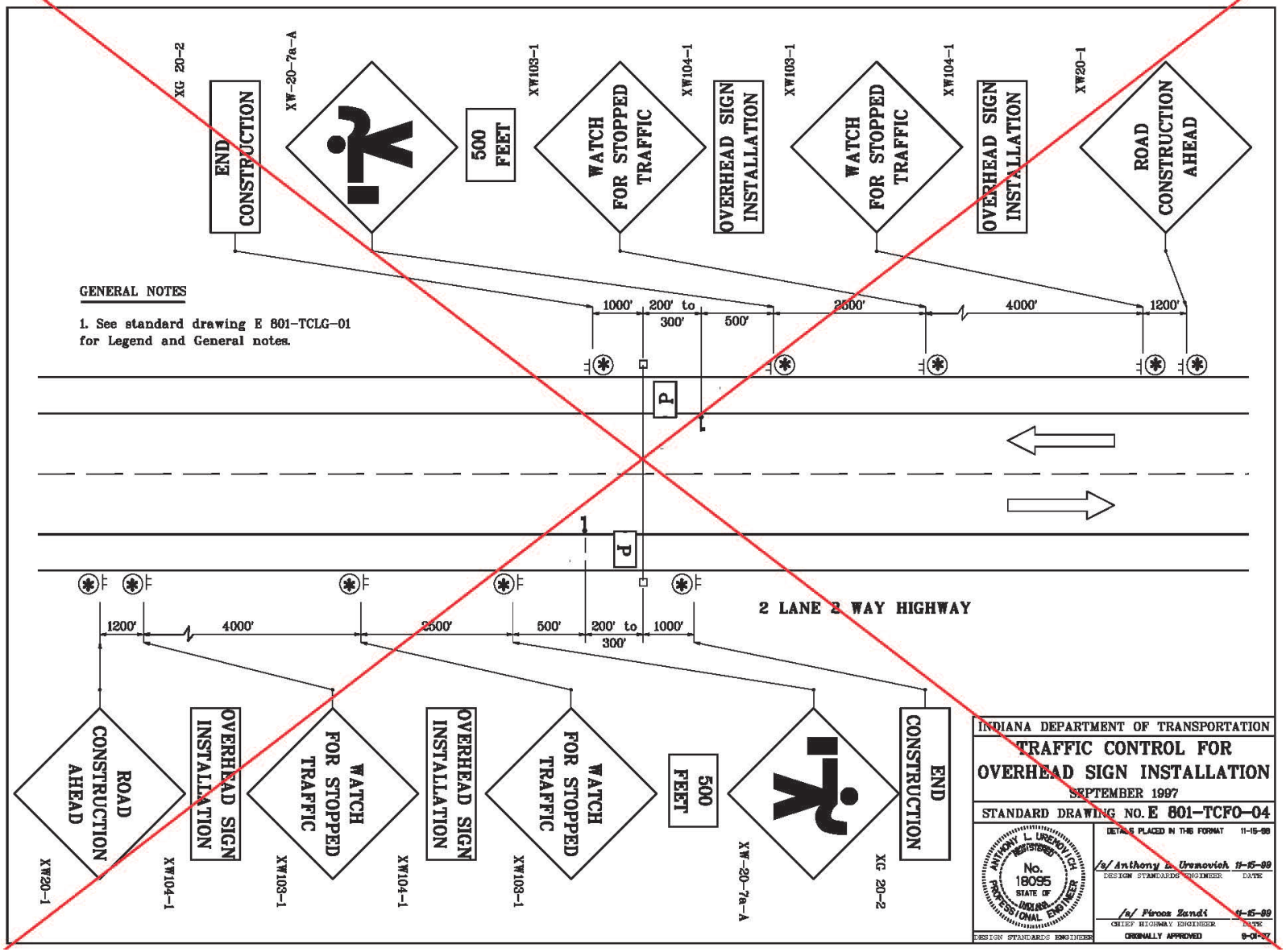

REVISION TO STANDARD SPECIFICATIONS AND STANDARD DRAWINGS

E 801-TCFO-05 TRAFFIC CONTROL FOR OVERHEAD INSTALLATION (WITH MARKUPS)

DELETE

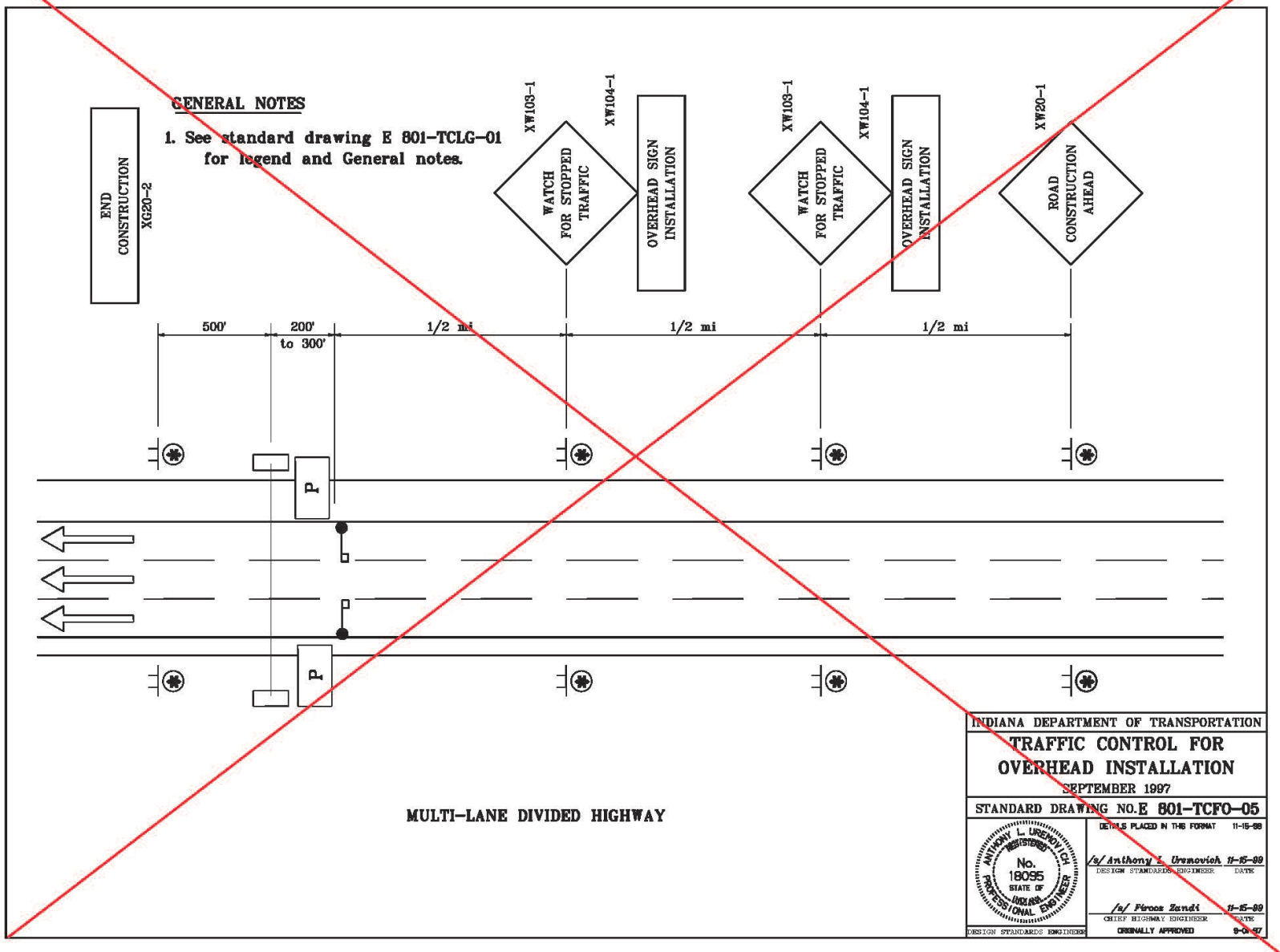

REVISION TO STANDARD SPECIFICATIONS AND STANDARD DRAWINGS

E 801-TCFO-06 TRAFFIC CONTROL FOR INTERSECTION WORK (WITH MARKUPS)

DELETE

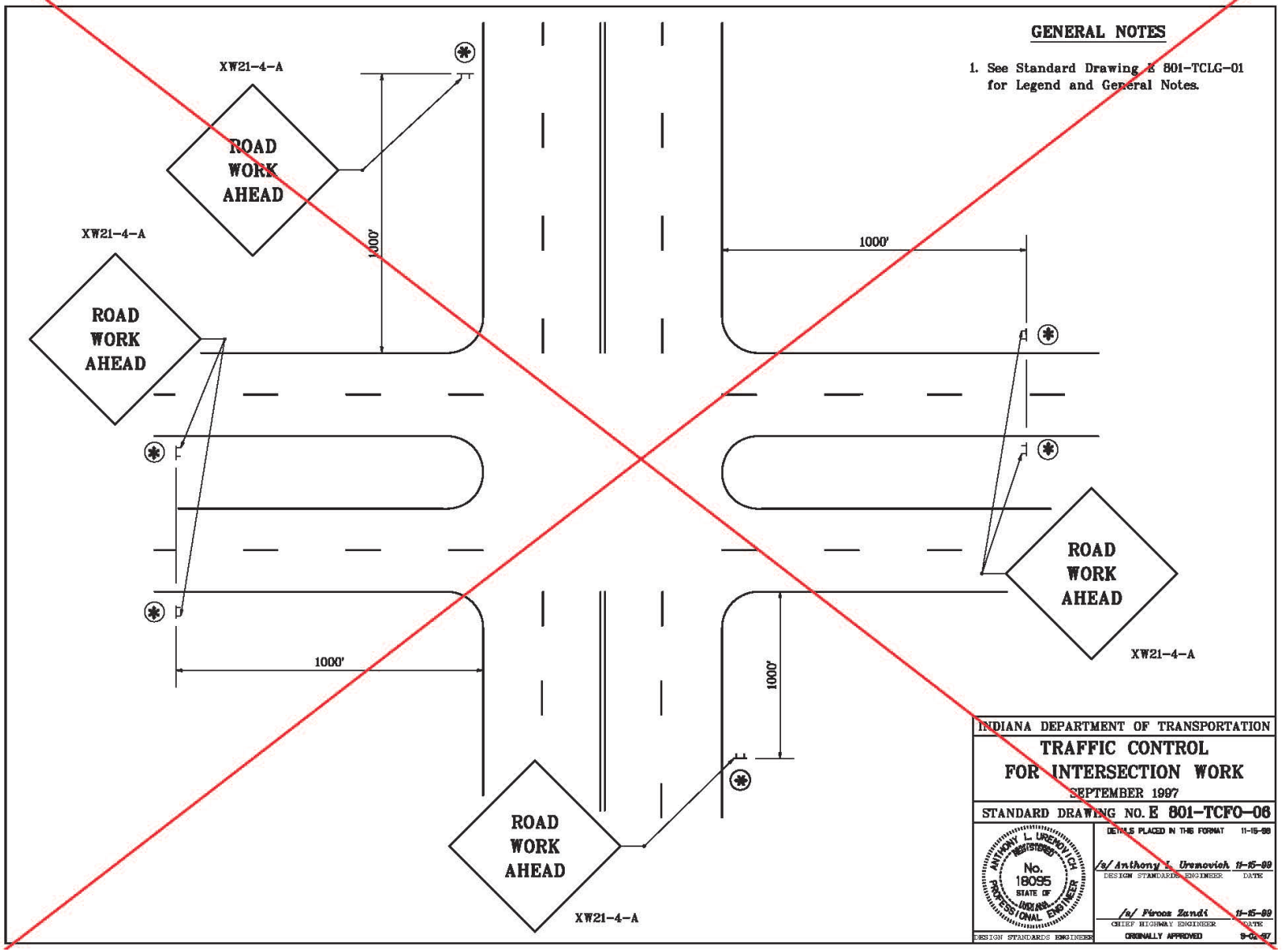

REVISION TO STANDARD SPECIFICATIONS AND STANDARD DRAWINGS

E 801-TCTC-05 TRAFFIC CONTROL FOR DAYTIME LANE CLOSURE (WITH MARKUPS)

Delete (Addressed in 801-TCFO Series)

NOTES:

1. See Standard Drawing E 801-TCLG-01 for Legend and General Notes.
2. See Standard Drawing E 801-TCDV-05 for sign mounting.

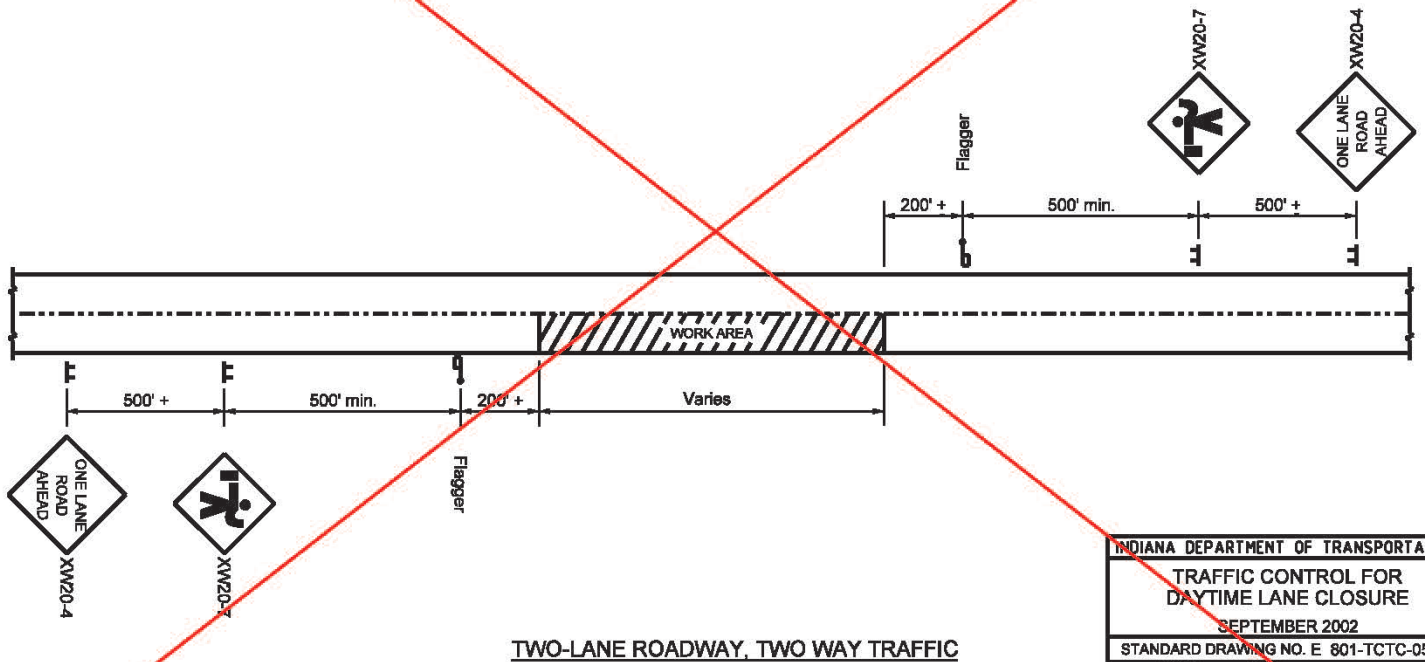

TWO-LANE ROADWAY, TWO WAY TRAFFIC

INDIANA DEPARTMENT OF TRANSPORTATION

TRAFFIC CONTROL FOR DAYTIME LANE CLOSURE

SEPTEMBER 2002

STANDARD DRAWING NO. E 801-TCTC-05

RICHARD L. VONCLEAVE REGISTERED No. 9750 STATE OF INDIANA PROFESSIONAL ENGINEER — DESIGN STANDARDS ENGINEER

/s/ Richard L. VonCleave — DESIGN STANDARDS ENGINEER — 9-03-02 DATE

/s/ Richard K. Snyder — CHIEF HIGHWAY ENGINEER — 9-03-02 DATE

REVISION TO STANDARD SPECIFICATIONS AND STANDARD DRAWINGS

E 801-TCTC-06 MAINTENANCE OF TRAFFIC FOR RPM CASTING INSTALLATION (WITH MARKUPS)

(Duplicate of Existing 801-TCFO-03 and Proposed 801-TCMO-02)

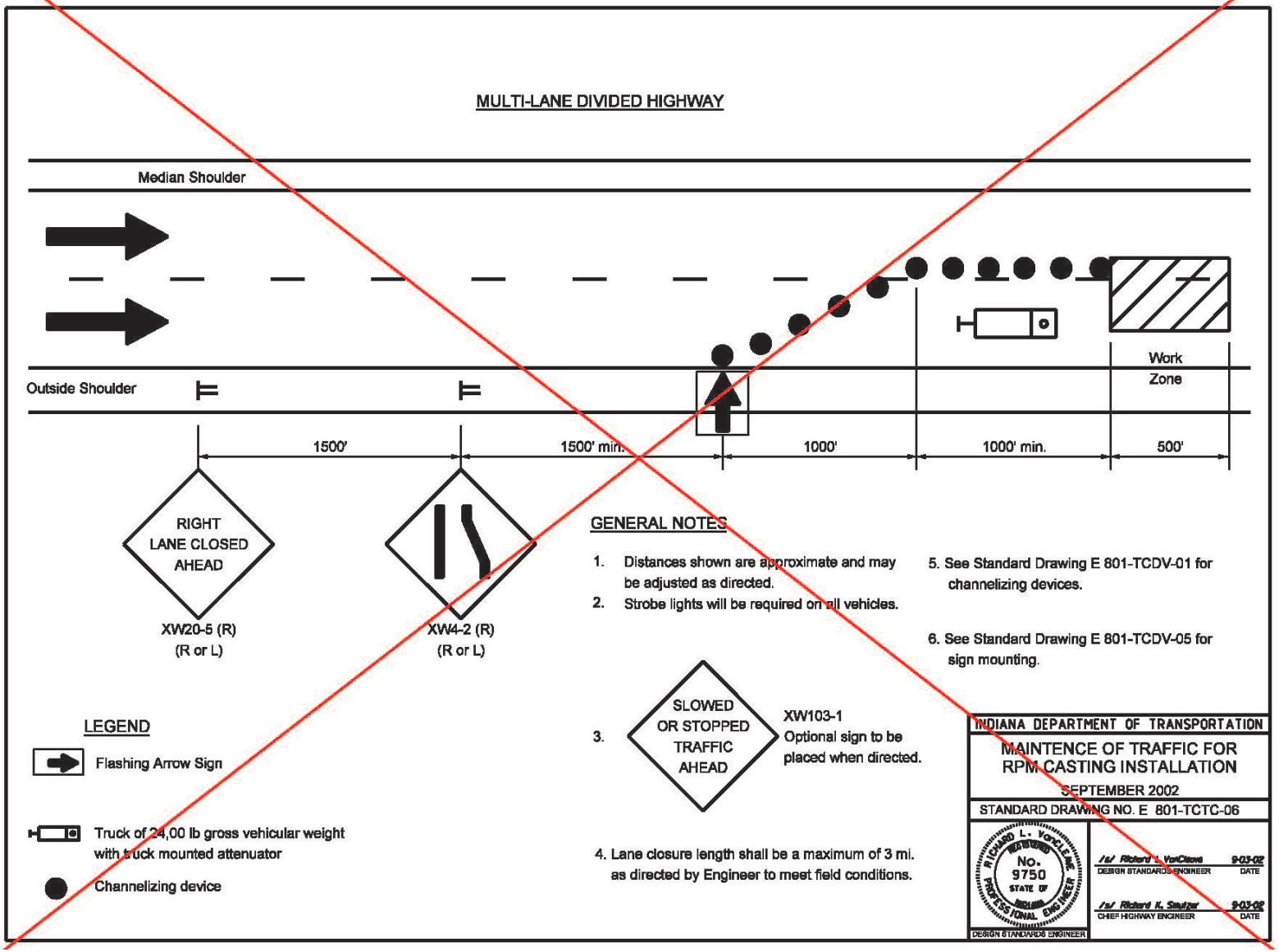

REVISION TO STANDARD SPECIFICATIONS AND STANDARD DRAWINGS

E 801-TCTC-07 MAINTENANCE OF TRAFFIC FOR RPM CASTING REPLACEMENT (WITH MARKUPS)

(Addressed in 801-TCLC-15)

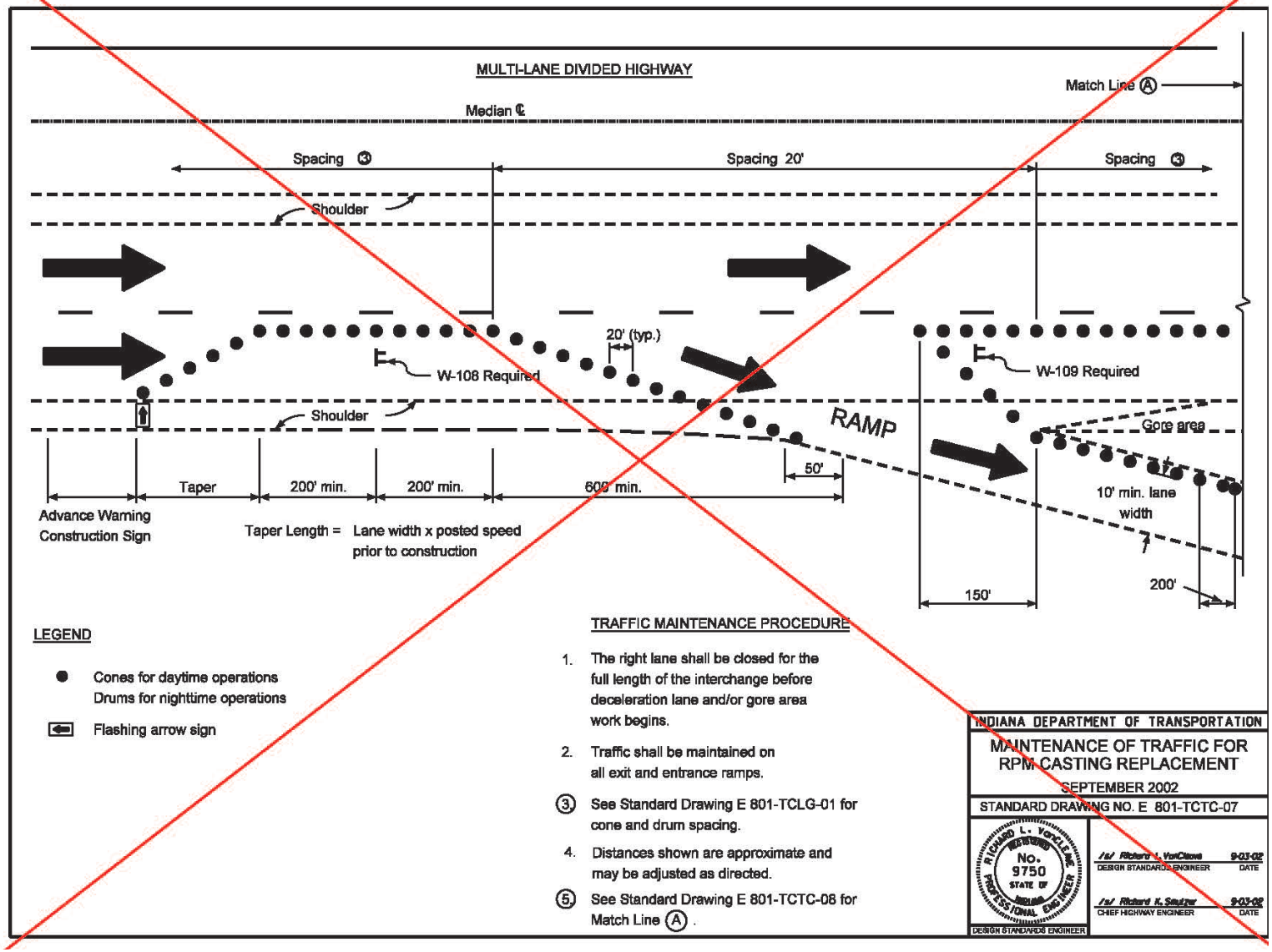

REVISION TO STANDARD SPECIFICATIONS AND STANDARD DRAWINGS

E 801-TCTC-08 MAINTENANCE OF TRAFFIC FOR RPM CASTING REPLACEMENT (WITH MARKUPS)

Delete (lane closure near an entrance ramp requires plan detail)

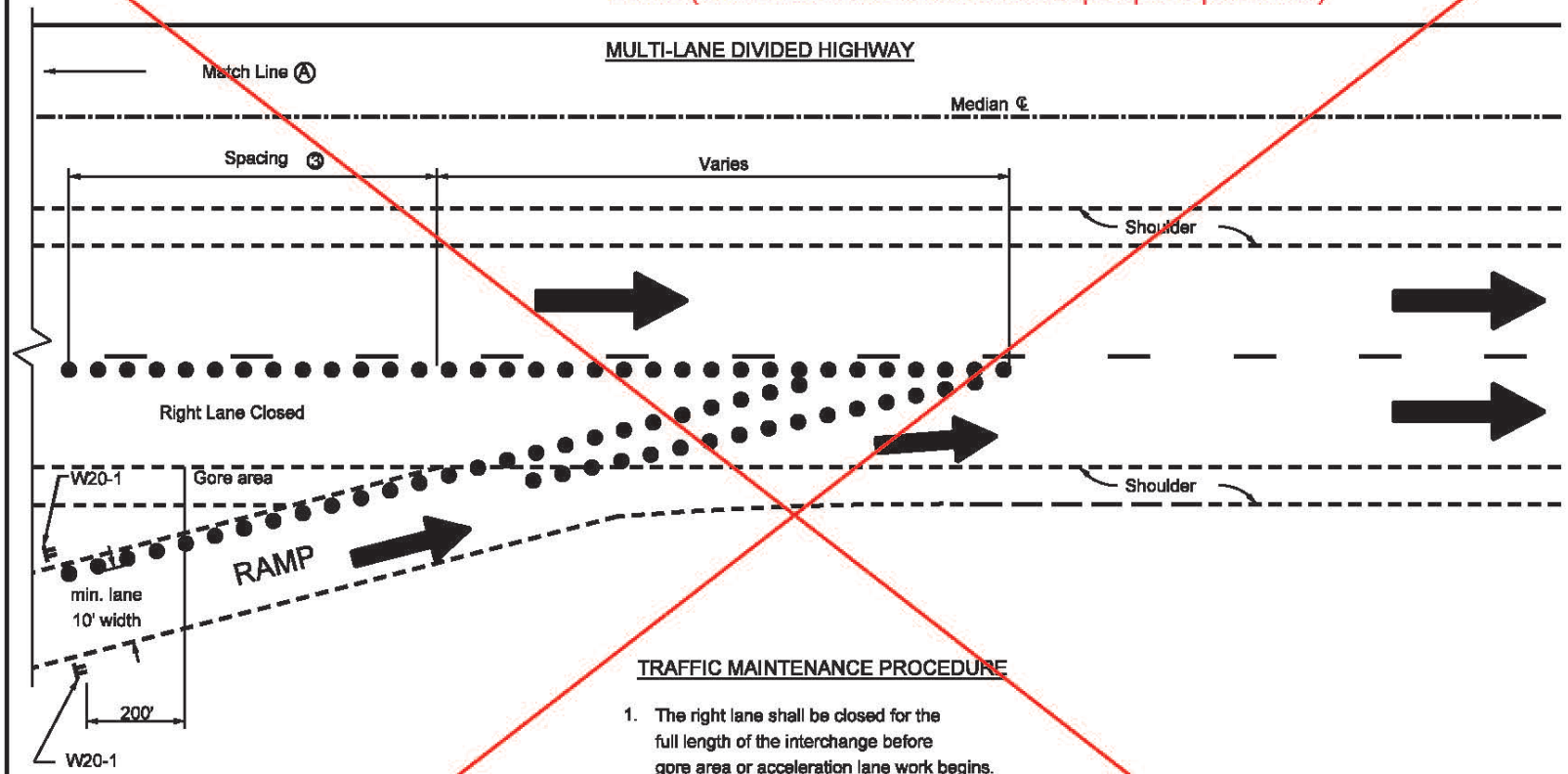

TRAFFIC MAINTENANCE PROCEDURE

1. The right lane shall be closed for the full length of the interchange before gore area or acceleration lane work begins. The right lane closure shall not to extend through two adjacent interchanges.
2. Traffic shall be maintained on all exit and entrance ramps.
3. See Standard Drawing E 801-TCLG-01 for cone and drum spacing.
4. Distances shown are approximate and may be adjusted as directed.
5. See Standard Drawing E 801-TCTC-07 for Match Line Ⓐ.

LEGEND

● Cones for daytime operations
Drums for nighttime operations

INDIANA DEPARTMENT OF TRANSPORTATION
MAINTAINCE OF TRAFFIC FOR RPM CASTING REPLACEMENT
SEPTEMBER 2002
STANDARD DRAWING NO. E 801-TCTC-08

RICHARD L. VONCLEVE III REGISTERED No. 9750 STATE OF INDIANA PROFESSIONAL ENGINEER
DESIGN STANDARDS ENGINEER

/s/ Richard L. VonCleve 9-03-02
DESIGN STANDARDS ENGINEER DATE

/s/ Richard K. Sauter 9-03-02
CHIEF HIGHWAY ENGINEER DATE

REVISION TO STANDARD SPECIFICATIONS AND STANDARD DRAWINGS

E 801-TCTC-09 MAINTENANCE OF TRAFFIC FOR RPM REFLECTOR REPLACEMENT (WITH MARKUPS)

Move to New Series on Traffic Control for Mobile Operations

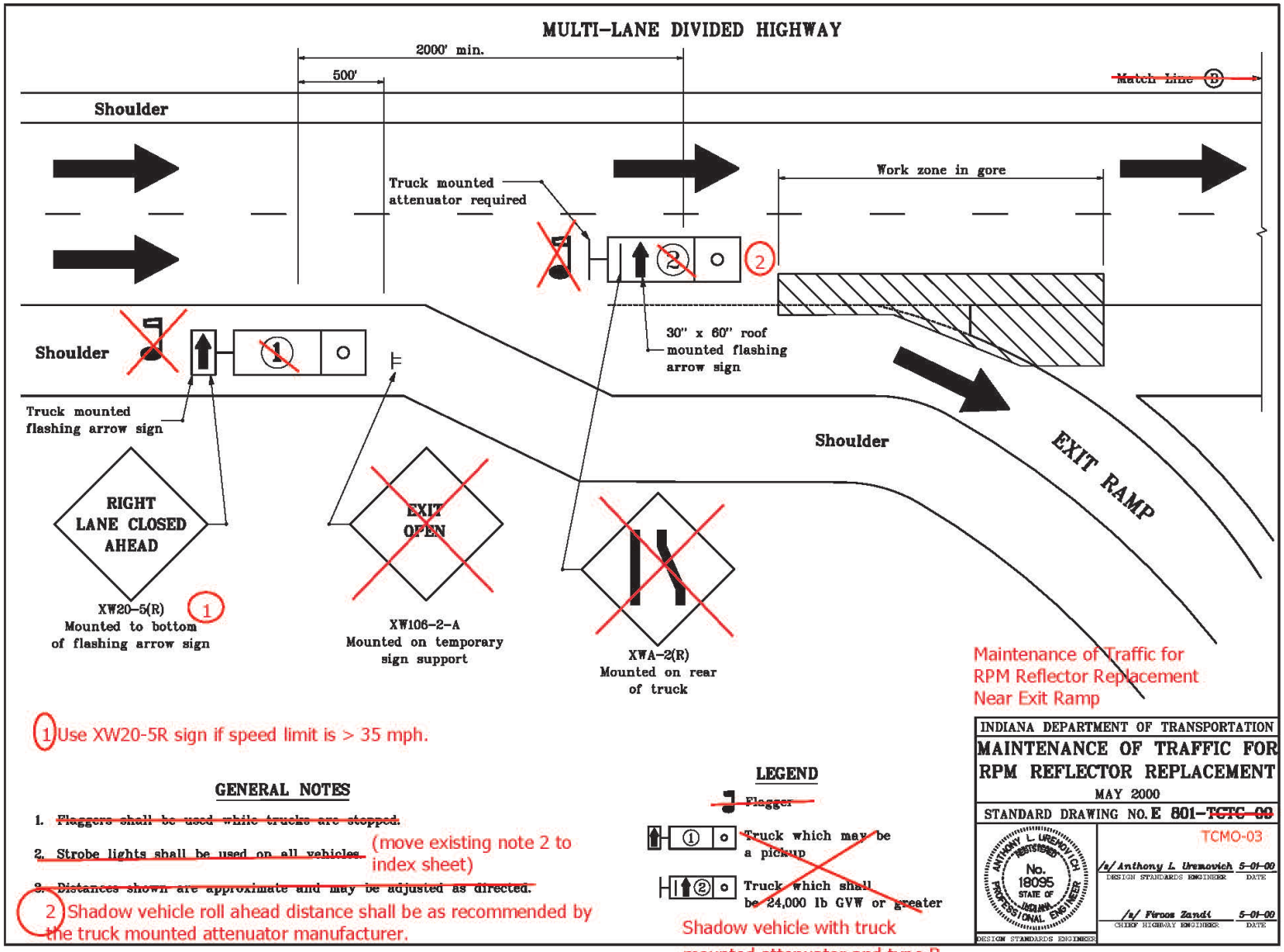

REVISION TO STANDARD SPECIFICATIONS AND STANDARD DRAWINGS

E 801-TCTC-10 MAINTENANCE OF TRAFFIC FOR RPM REFLECTOR REPLACEMENT (WITH MARKUPS)

Move to new series on Traffic Control for Mobile Operations

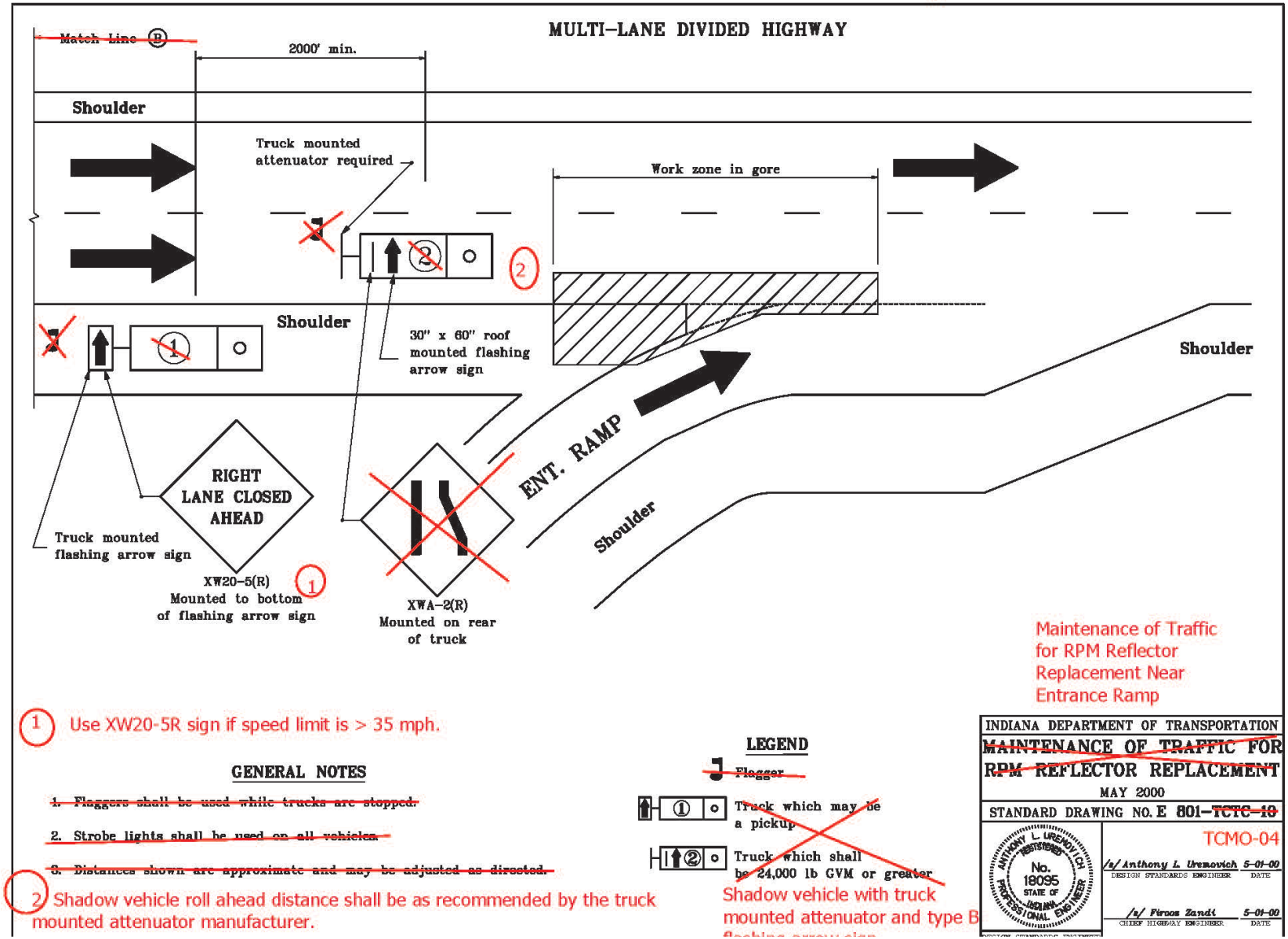

E 801-TCFO-01 FLAGGER OPERATION FOR TWO LANE ROAD, INDEX AND GENERAL NOTES (PROPOSED DRAFT)

INDEX

SHEET NO.	SUBJECT
1	Flagger Operation for Two Lane Road, Index and General Notes
2	Flagger Operation for Two Lane Road with Speed ≥ 50 mph (Multiple Work Areas)
3	Flagger Operation for Two Lane Road with Speed < 50 mph (Single Work Area)
4	Maintenance of Traffic for Mobile Operation with Flaggers

LONGITUDINAL BUFFER LENGTH

Posted Speed Limit (mph)	Length (ft)
≤30	200
35	250
40	305
45	360
50	425
55	495

GENERAL NOTES:

1. Unless otherwise noted, the spacing of channelizing devices in tangent sections shall be 100 ft where the posted speed limit is 50 mph or greater, and the spacing shall be 50 ft where the posted speed limit is less than or equal to 45 mph.
2. For temporary lane closures during daylight hours, cones or tubular markers may be used in lieu of drums.
3. Temporary pavement markings shall not be required for temporary daylight lane closures
4. Channelizing devices as shown are schematic, the number of channelizing devices will vary based on field conditions.

INDIANA DEPARTMENT OF TRANSPORTATION

FLAGGER OPERATION FOR TWO LANE ROAD, INDEX AND GENERAL NOTES

SEPTEMBER 2021

STANDARD DRAWING NO. E 801-TCFO-01

DESIGN STANDARDS ENGINEER DATE

CHIEF ENGINEER DATE

REVISION TO STANDARD SPECIFICATIONS AND STANDARD DRAWINGS

E 801-TCFO-02 FLAGGER OPERATION FOR TWO LANE ROAD WITH SPEED ≥ 50 MPH (MULTIPLE WORK AREAS) (PROPOSED DRAFT)

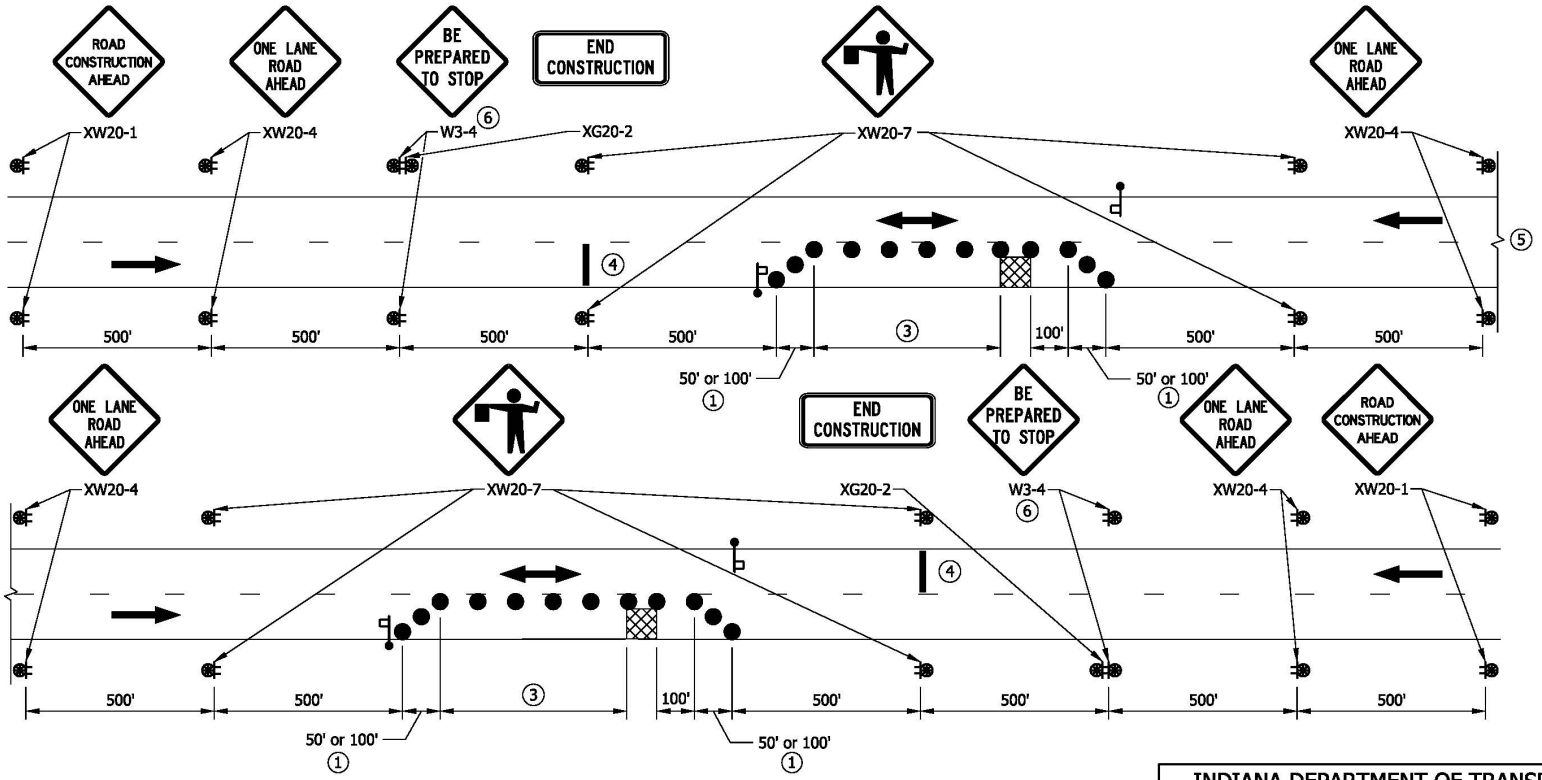

NOTES:

1. Spacing of channelizing devices at this location shall be 10 ft for a 50 ft taper or 20 ft for a 100 ft taper.
2. If Automated Flagger Assistance Devices are used, see Part 6 of the MUTCD for set-up requirements.
3. Longitudinal Buffer Length
4. Portable rumble strip installation, required if flagging operations exceed 4 hours at a location
5. Work areas more than 1 mile apart shall include XW20-1 signs 500 ft in advance of XW20-4 signs.
6. Sign is not repeated in between work areas.

LEGEND

- Flagger
- Work Area
- Channelizing Device
- Construction Sign and Supports
- Construction Warning Light, Type A
- Direction of Traffic

INDIANA DEPARTMENT OF TRANSPORTATION

FLAGGER OPERATION FOR TWO LANE ROAD WITH SPEED ≥ 50 MPH (MULTIPLE WORK AREAS)

SEPTEMBER 2021

STANDARD DRAWING NO. E 801-TCFO-02

DESIGN STANDARDS ENGINEER DATE

CHIEF ENGINEER DATE

REVISION TO STANDARD SPECIFICATIONS AND STANDARD DRAWINGS

E 801-TCFO-03 FLAGGER OPERATION FOR TWO LANE ROAD WITH SPEED < 50 MPH (SINGLE WORK AREA) (PROPOSED DRAFT)

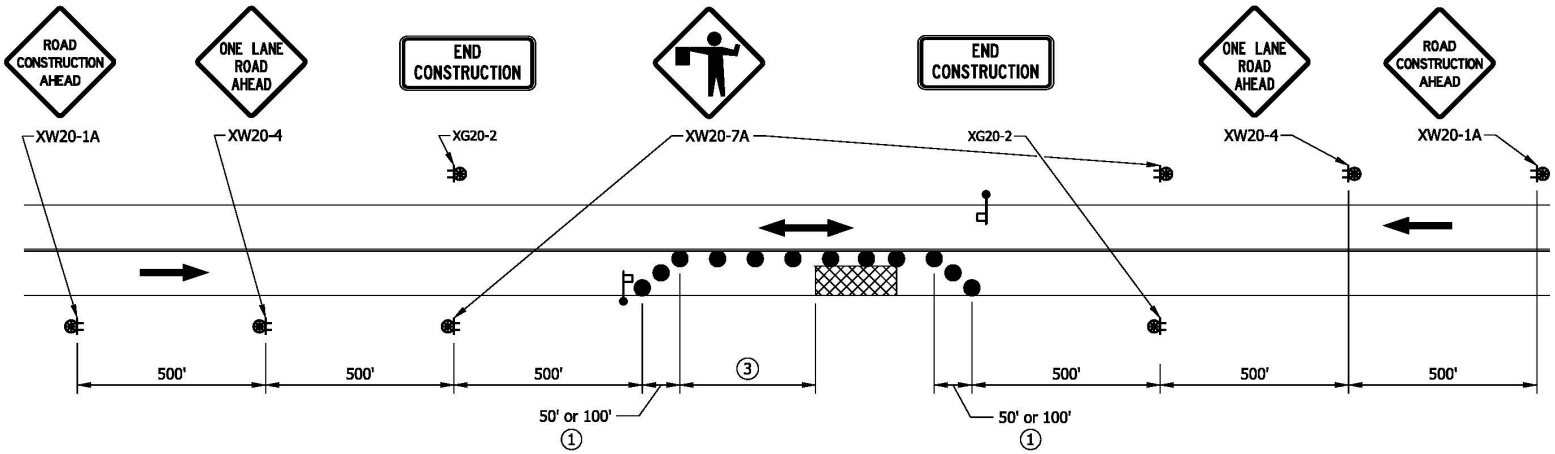

NOTES:

① Spacing of channelizing devices at this location shall be 10 ft for a 50 ft taper or 20 ft for a 100 ft taper.

2. If Automated Flagger Assistance Devices are used, see Part 6 of the MUTCD for set-up requirements.

③ Longitudinal Buffer Length

LEGEND

- Flagger
- Work Area
- Channelizing Device
- Construction Sign and Supports
- Construction Warning Light, Type A
- Direction of Traffic

INDIANA DEPARTMENT OF TRANSPORTATION

FLAGGER OPERATION FOR
TWO LANE ROAD WITH SPEED < 50 MPH
(SINGLE WORK AREA)

SEPTEMBER 2021

STANDARD DRAWING NO. E 801-TCFO-03

DESIGN STANDARDS ENGINEER DATE

CHIEF ENGINEER DATE

REVISION TO STANDARD SPECIFICATIONS AND STANDARD DRAWINGS

E 801-TCFO-04 MAINTENANCE OF TRAFFIC FOR MOBILE OPERATION WITH FLAGGERS (PROPOSED DRAFT)

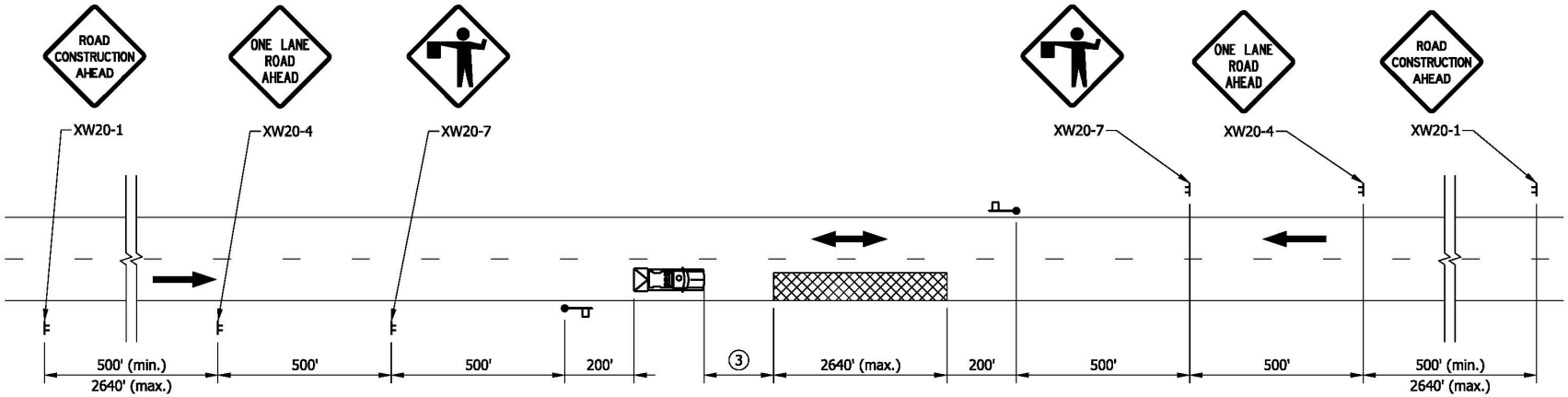

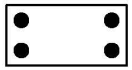

FLASHING ARROW SIGN DETAIL

②

NOTES:

1. Additional signs may be required for the moving operations so as to maintain proper spacing.

② Flashing arrow sign shall be in caution mode.

③ Shadow vehicle roll ahead distance shall be as recommended by the truck mounted attenuator manufacturer.

LEGEND

- Flagger
- Work Area
- Construction Sign and Supports
- Direction of Traffic
- Shadow vehicle with truck-mounted attenuator, type B flashing arrow sign, and strobe lights.

INDIANA DEPARTMENT OF TRANSPORTATION

MAINTENANCE OF TRAFFIC FOR MOBILE OPERATION WITH FLAGGERS

SEPTEMBER 2021

STANDARD DRAWING NO. E 801-TCFO-04

DESIGN STANDARDS ENGINEER DATE

CHIEF ENGINEER DATE

REVISION TO STANDARD SPECIFICATIONS AND STANDARD DRAWINGS

E 801-TCMO-01 MOBILE OPERATION, INDEX AND GENERAL NOTES (PROPOSED DRAFT)

INDEX

SHEET NO.	SUBJECT
1	Mobile Operation, Index and General Note
2	Traffic Control for Mobile Operation on a Divided Highway
3	Maintenance of Traffic for RPM Reflector Replacement Near Exit Ramp
4	Maintenance of Traffic for RPM Reflector Replacement Near Entrance Ramp

GENERAL NOTE:

1. Strobe lights shall be used on all shadow vehicles.

INDIANA DEPARTMENT OF TRANSPORTATION

MOBILE OPERATION,
INDEX AND GENERAL NOTES

SEPTEMBER 2021

STANDARD DRAWING NO. E 801-TCMO-01

DESIGN STANDARDS ENGINEER DATE

CHIEF ENGINEER DATE

REVISION TO STANDARD SPECIFICATIONS AND STANDARD DRAWINGS

E 801-TCMO-02 TRAFFIC CONTROL FOR MOBILE OPERATION ON A DIVIDED HIGHWAY (PROPOSED DRAFT)

NOTES:

1. Use XW20-5 sign if speed limit is > 35 mph.
2. If required, deploy additional shadow vehicle with XW 20-5 sign ¼ mi. in advance of any queue or as directed by the Engineer
3. Shadow vehicle roll ahead distance shall be as recommended by the truck mounted attenuator manufacturer.

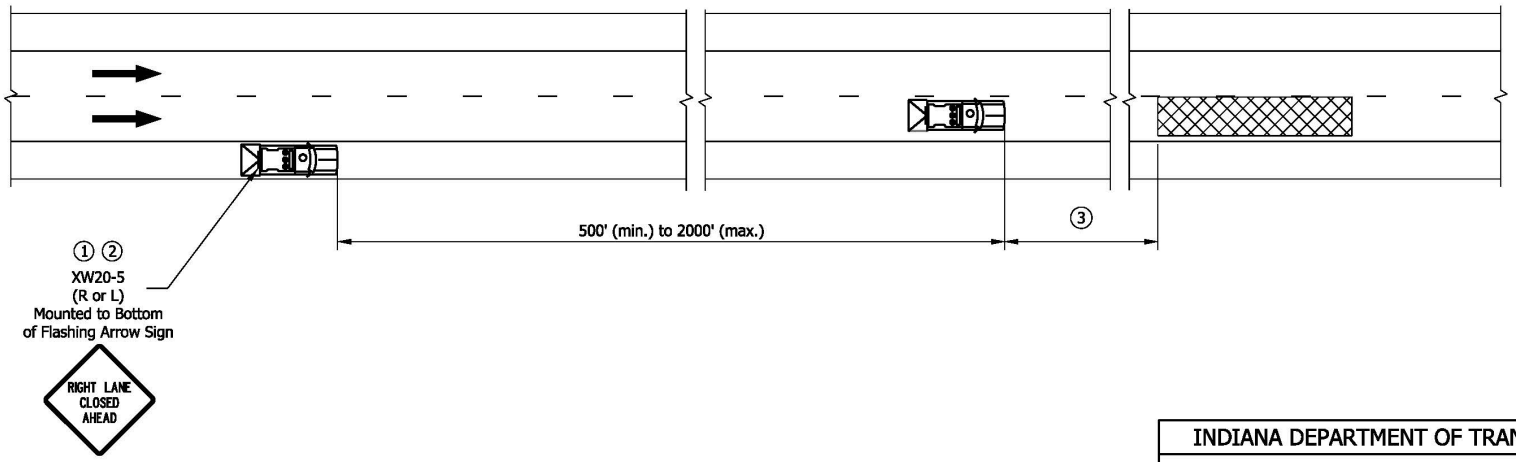

LEGEND

- Shadow Vehicle with Truck Mounted Attenuator and Type B Flashing Arrow Sign
- Work Area
- Direction of Traffic

INDIANA DEPARTMENT OF TRANSPORTATION

TRAFFIC CONTROL FOR MOBILE OPERATION ON A DIVIDED HIGHWAY

SEPTEMBER 2021

STANDARD DRAWING NO. E 801-TCMO-02

DESIGN STANDARDS ENGINEER DATE

CHIEF ENGINEER DATE

REVISION TO STANDARD SPECIFICATIONS AND STANDARD DRAWINGS

E 801-TCMO-03 MAINTENANCE OF TRAFFIC FOR RPM REFLECTOR REPLACEMENT NEAR EXIT RAMP (PROPOSED DRAFT)

NOTES:

1. Use XW20-5R sign if speed limit is > 35 mph.
2. Shadow vehicle roll ahead distance shall be as recommended by the truck mounted attenuator manufacturer.

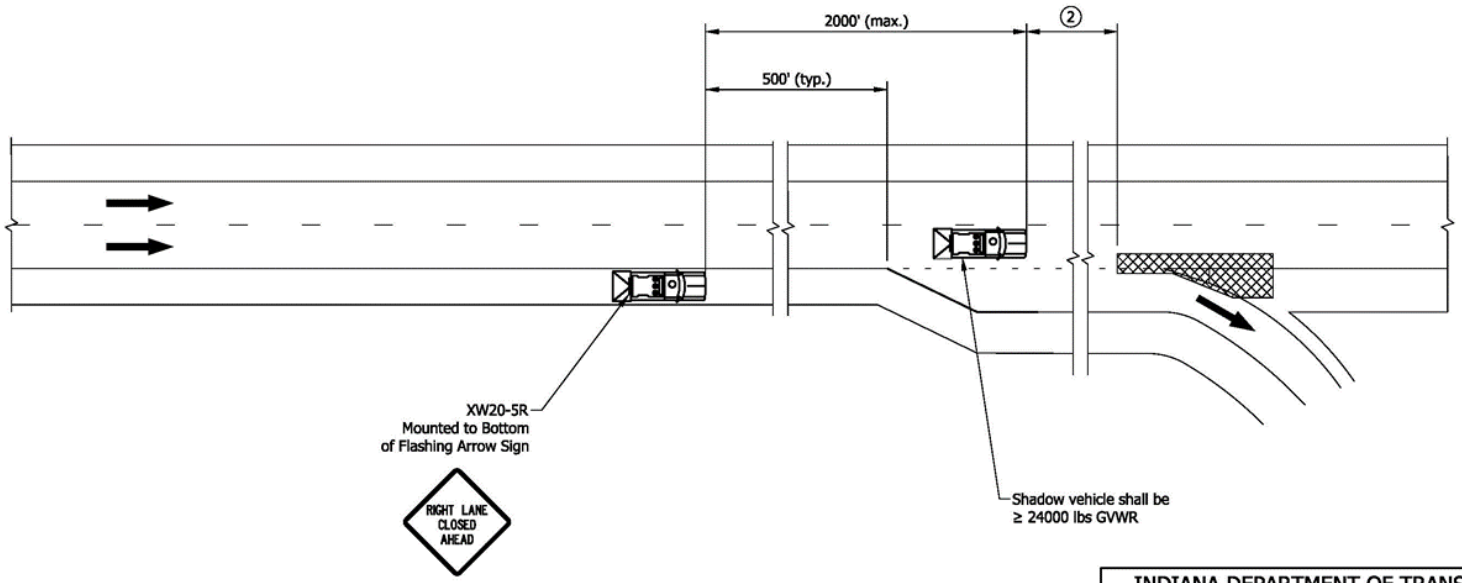

LEGEND

- Shadow Vehicle with Truck Mounted Attenuator and Type B Flashing Arrow Sign
- Work Area
- Direction of Traffic

INDIANA DEPARTMENT OF TRANSPORTATION	
MAINTENANCE OF TRAFFIC FOR RPM REFLECTOR REPLACEMENT NEAR EXIT RAMP SEPTEMBER 2021	
STANDARD DRAWING NO. E 801-TCMO-03	
	DESIGN STANDARDS ENGINEER DATE CHIEF ENGINEER DATE

REVISION TO STANDARD SPECIFICATIONS AND STANDARD DRAWINGS

E 801-TCMO-04 MAINTENANCE OF TRAFFIC FOR RPM REFLECTOR REPLACEMENT NEAR ENTRANCE RAMP (PROPOSED DRAFT)

NOTES:

1. Use XW20-5R sign if speed limit is greater than 35 mph.
2. Shadow vehicle roll ahead distance shall be as recommended by the truck mounted attenuator manufacturer.

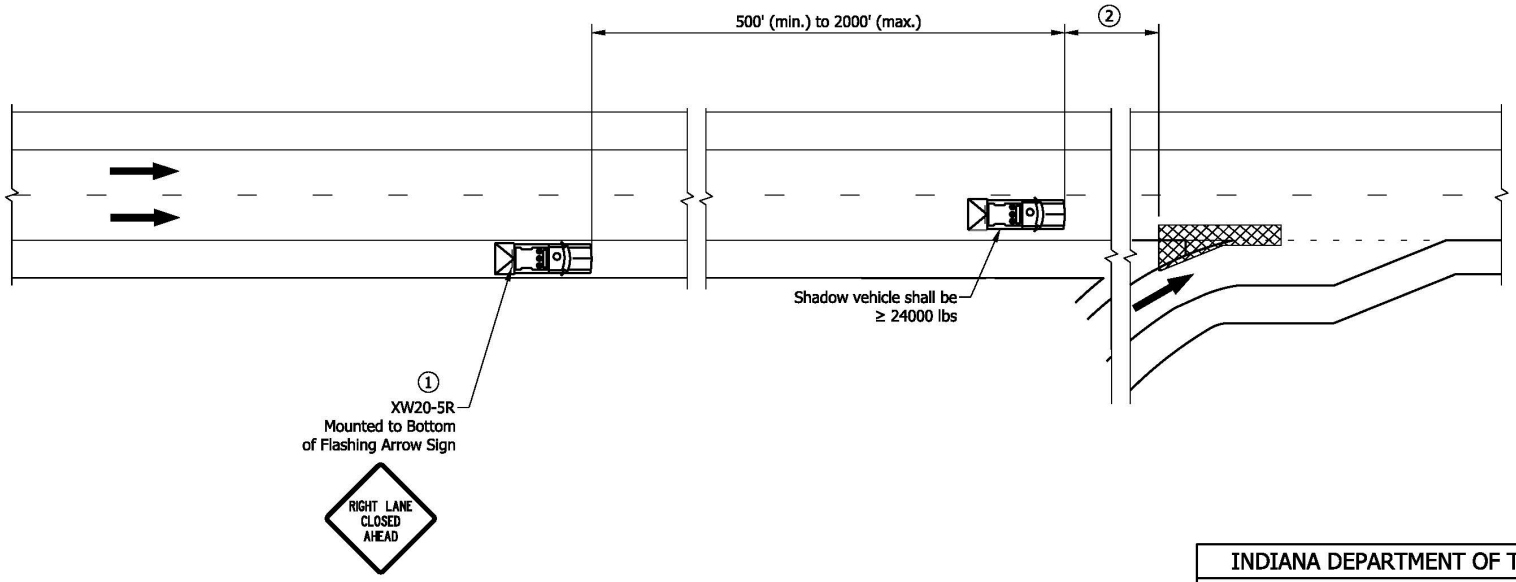

LEGEND

- Shadow Vehicle with Truck Mounted Attenuator and Type B Flashing Arrow Sign
- Work Area
- Direction of Traffic

INDIANA DEPARTMENT OF TRANSPORTATION	
MAINTENANCE OF TRAFFIC FOR RPM REFLECTOR REPLACEMENT NEAR ENTRANCE RAMP SEPTEMBER 2021	
STANDARD DRAWING NO. E 801-TCMO-04	
	DESIGN STANDARDS ENGINEER DATE CHIEF ENGINEER DATE

COMMENTS AND ACTION

801.16(b) Maintenance of Traffic for Mobile Operations
E 801-TCTC series
E 801-TCMO series
E 801-TCFO series

DISCUSSION:

Motion: Second: Ayes: Nays: FHWA Approval:	Action: ___ Passed as Submitted ___ Passed as Revised ___ Withdrawn
Standard Specifications Sections referenced and/or affected: 801.16 pg 830.	___ 2022 Standard Specifications ___ Revise Pay Items List
Recurring Special Provision references in: 801-T-209 TEMPORARY PORTABLE RUMBLE STRIPS	___ Create RSP (No.___) Effective: RSP Sunset Date:
Standard Drawing affected: 2 series [E 801-TCFO and E 801-TCTC] (see proposal)	___ Revise RSP (No.___) Effective: RSP Sunset Date:
Design Manual Sections affected: NONE	___ Standard Drawing Effective:
GIFE Sections cross-references: NONE	___ Create RPD (No. ___) Effective: ___ GIFE Update ___ SiteManager Update

AGENDA

PROPOSAL TO STANDARDS COMMITTEE

PROBLEM(S) ENCOUNTERED: Temporary portable rumble strips have been found to get out of alignment too frequently on freeways and appear to be tire treads when they get displaced. A more effective application for temporary portable rumble strips is with long-term stationary flagging operations.

PROPOSED SOLUTION: Delete recurring plan detail 801-T-209d and revise recurring special provision 801-T-209 to address use with long-term stationary flagging operations.

APPLICABLE STANDARD SPECIFICATIONS: No

APPLICABLE STANDARD DRAWINGS: Existing Standard Drawing E 801-TCFO-01, see related agenda item on update to flagging operation standard drawing (E 801-TCFO) series.

APPLICABLE DESIGN MANUAL SECTION: IDM §503-3.05(07) and §503-7.03(01)

APPLICABLE SECTION OF GIFE: No

APPLICABLE RECURRING SPECIAL PROVISIONS: 801-T-209

PAY ITEMS AFFECTED: Yes

APPLICABLE SUB-COMMITTEE ENDORSEMENT: Yes, traffic standards subcommittee

IF APPROVED AS RSP OR RPD, PROPOSED BASIS FOR USE: Required for all contracts with the Temporary Portable Rumble Strips pay item [801-12031].

IMPACT ANALYSIS (attach report): Yes, attached

Submitted By: Joe Bruno on behalf of Dave Boruff

Title: Sr. Engineer of Signals & Markings

Organization: INDOT Traffic Engineering Division

Phone Number: (317) 234-7949

Date: 1/25/2021

AGENDA

IMPACT ANALYSIS REPORT CHECKLIST

Explain the business case as to why this item should be presented to the Standards Committee for approval. Answer the following questions with Yes, No or N/A.

Does this item appear in any other specification sections? No
Will approval of this item affect the Approved Materials List? No
Will this proposal improve:

Construction costs? Yes

Construction time? No

Customer satisfaction? Yes

Congestion/travel time? Yes

Ride quality? No

Will this proposal reduce operational costs or maintenance effort? No

Will this item improve safety:

For motorists? Yes

For construction workers? Yes

Will this proposal improve quality for:

Construction procedures/processes? Yes

Asset preservation? Yes

Design process? Yes

Will this change provide the contractor more flexibility? Yes

Will this proposal provide clarification for the Contractor and field personnel? Yes

Can this item improve/reduce the number of potential change orders? Yes

Is this proposal needed for compliance with:

Federal or State regulations? No

AASHTO or other design code? No

Is this item editorial? No

Provide any further information as to why this proposal should be placed on the Standards Committee meeting Agenda: N/A

AGENDA

(Note: Proposed changes shown highlighted gray)

801-T-209 TEMPORARY PORTABLE RUMBLE STRIPS

(Revised 05-02-19)

The Standard Specifications are revised as follows:

SECTION 801, AFTER LINE 29, INSERT AS FOLLOWS:

Temporary Portable Rumble Strips 923.05.1

SECTION 801, AFTER LINE 641, INSERT AS FOLLOWS:

5. Temporary Portable Rumble Strips

Temporary portable rumble strips shall be placed as shown on the plans or as directed by the Engineer. Each strip, whether comprised of one segment or interlocking segments, shall extend to within 12 in. of the full lane width and be arranged in an array consisting of three complete strips spaced and configured in accordance with the manufacturer's recommendations, or as shown on the plans.

The Contractor shall verify placement with the Engineer prior to installation. Temporary portable rumble strips shall be removed from the roadway when no lane restrictions exist or as directed by the Engineer. When approved or directed by the Engineer, the temporary portable rumble strips shall be secured to the pavement, in accordance with the manufacturer's recommendations.

Prior to placement of the rumble strip, the roadway shall be cleaned to remove dust, sand, and other debris. The minimum roadway temperature at the time of installation shall be in accordance with manufacturer recommendations.

~~*The queue length for initial rumble strip placement shall be as shown on the plans.*~~

~~*The Contractor shall confirm the location of the maximum queue each day during the first three days following the initial installation of the temporary portable rumble strips or following a MOT phase change. Based on the preceding days observation and at the direction of the Engineer, the Contractor shall adjust placement of the rumble strip arrays and associated signs as detailed on the plans to obtain optimal placement for the prevailing traffic conditions. This relocation work shall not be performed during peak hour traffic periods.*~~

The Contractor shall ensure that the rumble strips are perpendicular to the lane and that the correct spacing between rumble strips is maintained. Positioning of the rumble strips shall be corrected if any strip moves by more than 6 in. during the work period. If any strip comes out of alignment, it shall be cleaned on both sides, and reset onto a clean roadway surface.

AGENDA

REVISION TO RECURRING SPECIAL PROVISION AND PLAN DETAILS

801-T 209 TEMPORARY PORTABLE RUMBLE STRIPS

SECTION 801, AFTER LINE 944, INSERT AS FOLLOWS:

Temporary portable rumble strips will be measured by the number of calendar days each array is used.

SECTION 801, AFTER LINE 1028, INSERT AS FOLLOWS:

Temporary portable rumble strips will be paid for at the contract unit price per day per each array. Payment will be made only once regardless of how many times the strips are moved or adjusted.

SECTION 801, AFTER LINE 1109, INSERT AS FOLLOWS:

Temporary Portable Rumble Strips .....DAY

SECTION 801, AFTER LINE 1157, INSERT AS FOLLOWS:

The cost of furnishing, installing, moving, maintaining, cleaning the existing pavement and removing the temporary portable rumble strips shall be included in the pay item.

SECTION 923, AFTER LINE 212, INSERT AS FOLLOWS:

923.05.1 Temporary Portable Rumble Strips

The temporary portable rumble strips shall ~~consist of~~contain thermoset cast urethane, engineered polymers, or rubber materials. The temporary portable rumble strips shall be manufactured for use at ambient temperatures from 0 to 110°F and able to withstand vehicles up to 80,000 lbs with minimal movement. The temporary portable rumble strip shall be less than 1 in. in height and consists of a single collapsible segment or be comprised of interlocking sections that shall extend to within 1 ft of the full lane width.

Each rumble strip shall be capable of being installed without adhesives or bolts. The face of the rumble strip shall be a non-slip textured surface. The colors of the temporary rumble strip materials may vary and are subject to approval by the Engineer prior to use.

A type C certification in accordance with 916 shall be provided.

AGENDA

REVISION TO RECURRING SPECIAL PROVISION AND PLAN DETAILS

801-T-209d TEMPORARY PORTABLE RUMBLE STRIP INSTALLATION (PROPOSED TO DISCONTINUE)

DELETE

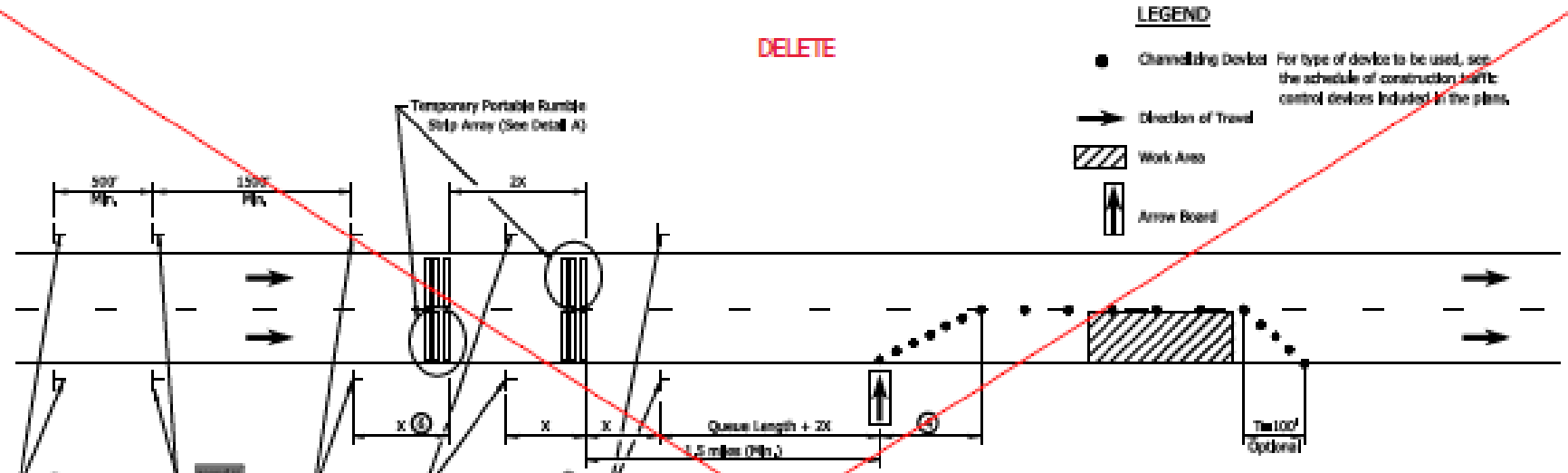

FREEWAY OR EXPRESSWAY WITH LANE CLOSURE

GENERAL NOTES:

1. Temporary portable rumble strips shall be placed after the associated construction signs, and removed prior to the removal of the signs.
2. Rumble strips shall not be placed in horizontal curves or on wet or sandy pavement.
3. For the lowest air temperature to apply the temporary portable rumble strips on road pavements, contact the temporary portable rumble strip manufacturer.
4. See Standard Drawing E 801-TCDV-03 for the configuration of the lane merge taper.
5. See Standard Drawing 801-TCLC-01 for placement of signs for lane merge.

(6) For posted speed limits of 50 mph or less, X shall be 350 ft. For posted speed limits of 55 or 60 mph, X shall be 400 ft.

(7) The "Watch For Stopped Traffic" signs may be eliminated if PCMS devices are placed on either side of the roadway and configured to deliver a relevant message about upcoming work zone conditions.

(8) Worksite speed limit of 60 mph or less, or temporary speed limit by Official Action.

9. For the initial installation the queue length shall be based on the maximum calculated queue. After initial queue length check the queue length shall be based on the observed maximum queue.

(10) Rumble strips shall be installed and spaced per manufacturer's recommendations.

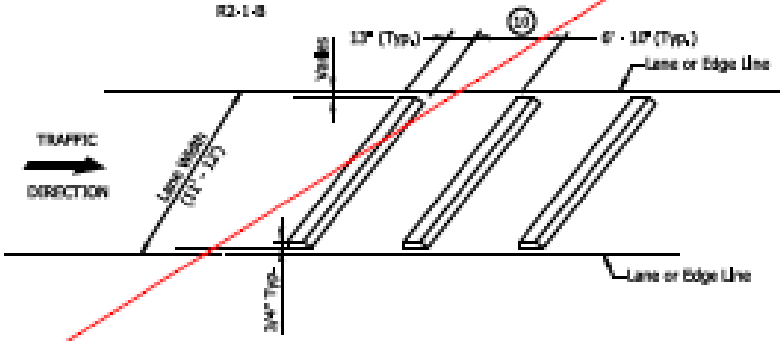

ISOMETRIC DETAIL A - TEMPORARY PORTABLE RUMBLE STRIP ARRAY

INDIANA DEPARTMENT OF TRANSPORTATION

TEMPORARY PORTABLE RUMBLE STRIP INSTALLATION
RURAL FREEWAY LANE CLOSURE APPLICATION

E 801-T-209d

Eff. for Lettings On or After 01-01-16

503-3.05(07) Temporary Transverse Rumble Strips [Rev. Month 2021]

The type of temporary transverse rumble strips known as buzz strips should be specified for any bridge project on a freeway where traffic is being crossed over or maintained adjacent to the work area. If queuing is expected then they should be used as back of queue warning.

Additionally, transverse rumble strips should be considered as a means to alerting drivers to potentially unexpected conditions when it is determined that the TTCP will include:

1 flagging or

2. a non-freeway lane merge or

3. within a long work zone where work areas are separated by areas with no work, particularly in advance of lane merges, lane shifts, or crossovers.

This measure can be particularly beneficial where speeds are high (greater than 40 mph), the peak-hour volume-to-capacity ratio approaches or is greater than 1, or if sight distance to the flagger or merge taper is restricted. This potential plan need should be discussed with the district during the preliminary and final field checks.

The type of temporary transverse rumble strips known as portable rumble strips should be specified with flagging on a two lane highway if the anticipated duration of the flagging operation at a location is more than 4 hours and the regular posted speed limit is 50 mph or 55 mph. Portable rumble strips may be considered under the following conditions:

•with any flagging operation; or
•within a long work zone where the work area is moving from day to day.

Portable rumble strips may be used only when the posted work zone or worksite speed limit is 60 mph or less. Additionally, the designer should specify the use of a TMA for installation and incorporate the TMA pay item into the cost estimate.

Temporary buzz strips should be considered for long term stationary duration work zone applications. The INDOT *Standard Specifications* require either removable or durable pavement markings.

For applications of temporary rumble strips other than back of queue warning on a

AGENDA

freeway/expressway a unique plan detail and associate special provision should be developed.

Section 503-7.03(01) provides additional information related to rumble strips.

503-7.03(01) Types [Rev. Month 2021]

1. Paint. Quick-drying traffic paint is a low-cost, temporary pavement marking. To improve reflectivity, glass beads are required. Temporary paint is a non-removable type of temporary pavement marking and is not allowed on a final pavement surface except as follows.

   If it is anticipated that the temporary markings will be in place through the winter months, temporary paint may be the most suitable choice on a final pavement surface. The decision to use temporary paint under these conditions should be coordinated with the district Traffic Office and district Construction.

2. Temporary Raised Pavement Markers. In a high traffic-volume location, raised temporary pavement markers should be considered as a supplemental device to improve delineation through the construction zone. Typical locations include centerline, lane line, gore area, or where there are changes in the alignment, e.g., lane closure or lane shift. For a centerline or lane line, temporary raised pavement markers are placed at the midpoint of each gap, i.e., every 40 ft. For a taper, gore, or similar element, the raised markers should be spaced at 20 ft. Temporary raised pavement markers must be removed prior to the placing of the next pavement course.

3. Temporary Pavement Marking Tape. Temporary pavement marking tape is the appropriate material choice where there is a change to the traffic pattern during construction, such as a crossover switch. Temporary tape may be the most desirable option when temporary markings are needed on the final pavement surface. It can be easily and quickly installed and, if necessary, easily removed. This helps to protect the pavement surface and eliminates the potential for "ghost markings" – left over remnants of the temporary markings that are no longer in the correct position. Disadvantages of temporary tape are that it tends to move or break up under heavy traffic volume, and that it is not suitable for usage during the winter months. Temporary pavement marking tape requires more maintenance in comparison to temporary paint. INDOT uses the following temporary pavement marking tape.

AGENDA

a. Type I. Type I tape is a removable type of temporary pavement marking that may be used as a temporary centerline, lane line, or no-passing zone line that is placed parallel to the normal pavement marking pattern, or as a temporary transverse marking or pavement message marking. It should also be used where pavement markings are placed at an angle to the normal pavement marking pattern, e.g., taper for lane closure or lane shift. When black Type I tape is used to cover conflicting markings, the width specified should be at least 1 in. wider than the existing marking to be covered.

b. Type II. Type II tape is a non-removable type of temporary pavement marking that may be used on a pavement which is expected to be removed or covered by additional pavement courses. It may be used as a centerline, lane line, or edge line that is parallel to the normal pavement markings. It may also be used as a centerline or lane line on a resurfacing overlay course.

4. Thermoplastic or Multi-Component Markings. Thermoplastic or multi-component (epoxy) markings are used in a construction zone only if the traffic volume is high, and the temporary traffic pattern will be in place for over one year. Thermoplastic or multi- component markings are non-removable types of pavement markings. Durable markings used for a temporary application are paid for with the appropriate pay item for permanent markings.

5. Rumble Strips. Transverse rumble strips are used in advance of a lane closure, alignment change, or stop condition to warn the motorist of the impending change. For shorter duration applications, portable rumble strips should be specified. For other long-duration applications, temporary buzz strips should be specified. Temporary buzz strips adhere to the pavement surface. They are created with extruded material or repeated passes of pavement marking tape to reach a ¼-in. height. See INDOT *Standard Drawings* series 801-TCDV for temporary buzz strip details. Figure 503-7G illustrates the typical layout for transverse rumble strips placed in advance of a lane closure.

Section 503-3.05(07) provides additional information regarding applications for transverse rumble strips.

AGENDA

INDIANA DEPARTMENT OF TRANSPORTATION

Driving Indiana's Economic Growth

Design Memorandum No. 21-xx

Month X, 2021

TO: **All Design, Operations, District Personnel, and Consultants**

FROM: **/s/ David Boruff**
David Boruff
Manager, Office of Traffic Administration
Traffic Engineering Division

SUBJECT: **Temporary Portable Rumble Strips**

REVISES: ***Indiana Design Manual*** **(IDM) Sections 503-3.05(07) and 503-7.03(01)**

EFFECTIVE: **Lettings on or after Third Month in Quarter 1, 2021**

IDM Sections 503-3.05(07) and 503-7.03(01) have been revised to include updated information on suitable applications for temporary portable rumble strips. The revised section is included for reference below. Recurring special provision 801-T-209 has also been updated.

Temporary portable rumble strips have been found to get out of alignment too frequently on freeways and appear to be tire treads when they get displaced. A more effective application for temporary portable rumble strips is with long-term stationary flagging operations. As a result, temporary portable rumble strips should be included in the plans for flagger operations on two-lane highways where the speed limit is 50 mph or above and the flaggers will be at a location for more than four hours.

Questions regarding project specific applications for temporary portable rumble strips should be discussed with the appropriate district Traffic Engineer. Dave Boruff, Office of Traffic Administration Manager, dboruff@indot.in.gov, may be contacted with general questions.

AGENDA

COMMENTS AND ACTION

801-T 209 TEMPORARY PORTABLE RUMBLE STRIPS
801-T-209d TEMPORARY PORTABLE RUMBLE STRIP INSTALLATION

DISCUSSION:

Motion: Second: Ayes: Nays: FHWA Approval:	Action: ___ Passed as Submitted ___ Passed as Revised ___ Withdrawn
Standard Specifications Sections referenced and/or affected: 801 pg 811. Recurring Special Provision affected: 801-T-209 TEMPORARY PORTABLE RUMBLE STRIPS Recurring Plan Details affected: 801-T-209d TEMPORARY PORTABLE RUMBLE STRIP INSTALLATION Standard Drawing affected: Existing Standard Drawing E 801-TCFO-01, see related agenda item on update to flagging operation standard drawing (E 801-TCFO) series. Design Manual Sections affected: IDM §503-3.05(07) and §503-7.03(01) GIFE Sections cross-references: NONE	___ 2022 Standard Specifications ___ Revise Pay Items List ___ Create RSP (No.___) Effective: RSP Sunset Date: ___ Revise RSP (No.___) Effective: RSP Sunset Date: ___ Standard Drawing Effective: ___ Create RPD (No. ___) Effective: ___ GIFE Update ___ SiteManager Update

AGENDA

PROPOSAL TO STANDARDS COMMITTEE

PROBLEM(S) ENCOUNTERED: Since the RSP has been developed and implemented, there have been a few minor issues that need to be corrected to produce a better understanding and clearer concept of the new language within the proposal.

PROPOSED SOLUTION: Revisions to the language and payment calculation formulas are being proposed.

APPLICABLE STANDARD SPECIFICATIONS: 205

APPLICABLE STANDARD DRAWINGS: N/A

APPLICABLE DESIGN MANUAL SECTION: Chapter 205

APPLICABLE SECTION OF GIFE: Section 3.1

APPLICABLE RECURRING SPECIAL PROVISIONS: 205-R-706

PAY ITEMS AFFECTED: N/A

APPLICABLE SUB-COMMITTEE ENDORSEMENT: Ad hoc committee

IMPACT ANALYSIS (attach report): N/A

Submitted By: Kurt Pelz

Title: Construction Management Technical Support

Organization: INDOT

Phone Number: 317-691-4800

Date: 1/28/2021

AGENDA

IMPACT ANALYSIS REPORT CHECKLIST

Explain the business case as to why this item should be presented to the Standards Committee for approval. Answer the following questions with Yes, No or N/A.

Does this item appear in any other specification sections? No

Will approval of this item affect the Approved Materials List? No

Will this proposal improve:

Construction costs? Yes

Construction time? Yes

Customer satisfaction? Yes

Congestion/travel time? No

Ride quality? No

Will this proposal reduce operational costs or maintenance effort? No

Will this item improve safety:

For motorists? No

For construction workers? No

Will this proposal improve quality for:

Construction procedures/processes? Yes

Asset preservation? Yes

Design process? No

Will this change provide the contractor more flexibility? No

Will this proposal provide clarification for the Contractor and field personnel? Yes

Can this item improve/reduce the number of potential change orders? Yes

Is this proposal needed for compliance with:

Federal or State regulations? Yes

AASHTO or other design code? No

Is this item editorial? No

Provide any further information as to why this proposal should be placed on the Standards Committee meeting Agenda: N/A

AGENDA

(Note: Proposed changes shown highlighted gray)

205-R-706 STORMWATER MANAGEMENT

(Revised 01-16-20)

The Standard Specifications are revised as follows:

SECTION 101, BEGIN LINE 95, DELETE AND INSERT AS FOLLOWS:

NOI Notice of ~~Intend~~*Intent*

SECTION 101, AFTER LINE 186, INSERT AS FOLLOWS:

101.10.1 Concrete Wastewater

Wastewater associated with liquid waste from concrete, grout, mortar, stucco and other similar construction materials resulting from concrete washout, hydrodemolition, saw cutting, coring, or dewatering operations contaminated by concrete pours or similar activities.

SECTION 101, AFTER LINE 306, INSERT AS FOLLOWS:

101.29.1 Land-disturbing Activity

Any man-made action to the land surface that exposes the underlying soil including clearing, grading, excavation operations, cutting and filling, or the movement and stockpiling of top soils.

SECTION 101, AFTER LINE 512, INSERT AS FOLLOWS:

101.71.1 Wastewater

Water containing waste residue from paint, form release oils, curing compounds and other construction debris, as well as soaps, detergents or solvents used in vehicle, equipment and structure washing, or other material defined as illicit discharge in accordance with 327 IAC 15-13-5(28) including untreated sediment-laden stormwater.

SECTION 108, DELETE LINES 119 THROUGH 147.

SECTION 108, BEGIN LINE 119, INSERT AS FOLLOWS:

For those contracts not requiring ~~water quality~~waterway permits, or a Construction Stormwater General Permit, or a 327 IAC 15-5 permit, the Contractor shall submit a written site plan to the Engineer describing the following:

1. *A description of the contract site.*
2. *The locations of all equipment storage areas, fueling locations, construction trailers, batch plants, and designated concrete truck washout locations.*
3. *A material handling and spill prevention plan.*
4. *Provide a cost breakdown of the stormwater management implementation pay item, when the item is present.*

AGENDA

The site plan shall be submitted for acceptance seven calendar days prior to the start of any construction activity. Construction activities shall not begin until the written site plan has been approved by the Engineer.

The cost of preparation of the site plan described above shall be included in the cost of other items of the contract. The cost of the stormwater management implementation of the site plan will be paid for in accordance with 205.11.

For contracts not requiring waterway permits but having a Stormwater Management Budget, the Contractor shall locate, install, maintain and remove temporary stormwater, sediment, and erosion control BMPs, for land-disturbing activity areas in accordance with 205. An SWQCP will not be required for these contracts.

For contracts requiring ~~water quality~~waterway permits, a Construction Stormwater General Permit, or a 327 IAC 15-5 permit, an SWQCP shall be developed and submitted to the Engineer for review, in accordance with 205.03.

Borrow and disposal sites shall be in accordance with 203.08. When required by a Construction Stormwater General Permit or 327 IAC 15-5, stockpile and storage sites shall have their own permit. The Contractor shall submit an NOS to the Engineer prior to the beginning of operations at those locations. An NOI with an IDEM time stamp 48 h prior to the beginning of operations at these locations shall also meet these requirements.

SECTION 205, DELETE LINE 1 THROUGH 774.

SECTION 205, BEGIN LINE 1, INSERT AS FOLLOWS:

SECTION 205 – STORMWATER MANAGEMENT

205.01 Description

This work shall consist of furnishing, installing, inspecting, maintaining, and removing BMPs in accordance with 105.03, the Department's Design SWPPP, the submitted and accepted SWQCP or an approved written site plan developed by the Contractor.

MATERIALS

205.02 Materials

Materials shall be in accordance with the following:

Coarse Aggregate, Class F or Higher..... 904
Fertilizer..... 914.03
Filter Sock..... 914.09(h)
Geotextile..... 918.02
Grass Seed, Temporary..... 914.02
Manufactured Surface Protection Products..... 205.04(c)

AGENDA

Metal End Sections..... 908.06
Mulch..... 914.05(a)
Pipe Drains..... 715.02(d)
Plastic Net..... 914.09(g)
*Revetment Riprap..... 904**
Stakes..... 914.09(b)
Staples..... 914.09(f)
Top Soil..... 914.01
Water..... 914.09(a)
** The minimum depth does not apply.*

CONSTRUCTION REQUIREMENTS

205.03 General Requirements

For contracts requiring ~~water quality~~waterway permits, a Construction Stormwater General Permit, or a 327 IAC 15-5 permit, an SWQCP shall be developed and submitted to the Engineer for review.

The Contractor shall furnish, install, inspect, maintain, and remove BMPs for land-disturbing activity areas, and develop an SWQCP in accordance with the Construction Stormwater General Permit or 327 IAC 15-5. The Contractor's SWQCP shall be a required contract specific component to the Department's Design SWPPP. The submitted and accepted Contractor's SWQCP shall interrelate with the Department's Design SWPPP in order to satisfy the requirements of the Construction Stormwater General Permit, or 327 IAC 15-5.

(a) Stormwater Quality Control Plan Development

The Contractor's SWQCP shall be developed by a professional engineer who holds a current CPESC certification or approved equivalent. The SWQCP developer shall be familiar with the project site and be able to develop the SWQCP in accordance with the site conditions. In the event of conflict between requirements, pollution control laws, rules, or regulations of other Federal, State or local agencies, the Contractor's SWQCP shall adhere to the more restrictive laws, rules, or regulations. The SWQCP developer shall issue clarifications, correct errors and omissions, and revise the SWQCP as required. The Contractor's SWQCP shall be signed and sealed by the SWQCP developer, as defined above.

The Contractor shall develop the SWQCP in accordance with the Construction Stormwater General Permit, 327 IAC 15-5, the IDEM "Indiana Storm Water Quality Manual", ITM 803, and all other applicable contract documents.

(b) Stormwater Quality Control Plan Content

The Contractor's SWQCP shall include the processes and procedures of how the Contractor intends to meet the requirements outlined in this section and in accordance with ITM 803.

AGENDA

The Contractor may elect to prepare and submit the SWQCP in multiple phases. The first phase shall show the location, installation, and maintenance of BMPs for the existing topography of the project and identify the total number of proposed construction phases for the contract. Additional phases shall be submitted for review prior to land-disturbing activities for those phases and shall show the progression from the existing topography to final grade. Each phase of the SWQCP shall be modified to meet existing field conditions as needed.

Any individual phase of the SWQCP shall be submitted to the Engineer for review a minimum of 14 calendar days prior to commencing land-disturbing activities for that phase. Upon receipt, the Engineer will perform a review of the submitted phase of the SWQCP within 14 calendar days for acceptance.

At a minimum, the SWQCP shall include the following:

1. *Description of the site.*

2. *Locations of all proposed soil stockpiles.*

3. *Locations of all proposed equipment storage areas, fueling locations, construction trailers, batch plants, and designated concrete truck washout areas.*

4. *Proposed construction sequence and phasing of BMPs including plans for installation, inspection, maintenance, and removal of BMPs. The total number of proposed construction phases shall also be specified.*

5. *Locations of offsite areas that drain onto project limits. The SWQCP shall include BMPs properly sized and placed to accommodate runoff from outside of the project limits and from within the project limits.*

6. *Locations of all construction entrances where vehicles and equipment will enter and exit the site.*

7. *An updated stormwater management budget including a complete list of all proposed BMPs with price calculations based upon the established unit prices or contract prices. If the total proposed budget exceeds the original stormwater management budget pay item, the Contractor shall submit a Change Order Request form, in accordance with 109.05, to provide an explanation and justification for the additional BMPs. Proposed BMPs and costs will be reviewed by the*

AGENDA

Engineer. If accepted, the changes shall be included into the SWQCP. Additional accepted costs will be included in the contract in accordance with 109.05.

8. *Material handling and spill prevention plan. A plan for the collection, storage, and disposal of concrete washout wastewater shall be in accordance with 205.03(d).*

9. *Statements that the BMPs for the project shall, at a minimum, be inspected each calendar week and by the end of the next work day following every 1/2 in. rain event.*

10. *Provisions to ensure that pollutants such as fuels, lubricants, asphalt, sewage, wash water, wastewater, or waste from concrete mixing operations, and other harmful materials shall not be discharged into existing bodies of water.*

11. *Provisions to ensure that all applicable regulations and statutes relating to the prevention and abatement of pollution shall be complied with in the performance of the contract.*

12. *Provide a cost breakdown of the stormwater management implementation pay item.*

When Waters of the United States, wetlands, or other protected resources are identified in the plans within or adjacent to the project limits the following shall also be addressed in the SWQCP:

1. *The location of protected resource fencing, or protected resource signs. These measures shall be used to provide clear delineation for protected resources that have the potential to be impacted by construction operations.*

2. *A method for conducting work located in or adjacent to bodies of water and protected resources. The method shall indicate how the work in these locations shall be conducted to comply with all conditions of the project permits.*

The Contractor's SWQCP shall incorporate all narrative information, plan sheets, and implementation information necessary for stormwater management utilized for the project. The SWQCP shall include any revisions to the Department's Design SWPPP and the plans. The revisions shall comply with all known permit requirements applicable to the construction phase of the project including ~~water quality~~waterway permits, or a Construction Stormwater General Permit, or a 327 IAC 15-5 permit, and those required by the Contractor in accordance with 107.01 and 205.03(c). Electronic files of any plan

AGENDA

sheets and narratives included as part of the SWQCP submittal shall be provided in PDF format.

On projects requiring an SWQCP, an updated field copy of the SWQCP shall be retained in the office of the Engineer or at a mutually agreed upon location. Any accepted revisions shall be annotated in the field copy of the SWQCP and initialed and dated by the SWQM and the Engineer.

A copy of the Contractor's offsite operations permits for items such as offsite stockpiles, borrow sites, waste sites, or storage areas shall be submitted to the Engineer prior to any land-disturbing activities at those sites.

Revisions to the SWQCP shall be submitted and signed and sealed by the SWQCP developer, for items that are hydraulically sized or calculated such as sediment basins or other similar measures. The SWQM may submit revisions for items that are not hydraulically sized or calculated. Adjustments to the BMPs shall be subject to the Engineer's acceptance.

If a governmental agency or a local governmental authority finds a violation of NPDES or other surface ~~water~~waterway permits provided in the contract documents, if any BMPs are incomplete, or the Contractor's SWQCP is incomplete, full responsibility shall be borne by the Contractor to make the necessary corrections. In addition, if an assessment, damage judgment or finding, agreed order, fine, or any other expense for a violation of the contract requirements is leveled against the Department, the Contractor shall reimburse the State for that amount within 30 days. The Contractor agrees to indemnify and hold harmless the Department and will reimburse the Department for any assessments, damage judgments or finding, fine, penalty, or other expense relating to this portion of the contract. The Department may withhold the amount owed from the Contractor's subsequent pay estimates. Delays caused by stop work orders from regulatory agencies, suspension of work orders from the Department, or any other delays caused by inadequate submittals or implementation will be considered Non-Excusable Delays in accordance with 108.08(c).

(c) Stormwater Quality Manager

On contracts requiring an SWQCP, the Contractor shall designate one person as the contract SWQM. The name of the SWQM shall be furnished to the Engineer at, or prior to, the pre-construction conference. If the designated individual is replaced during the contract, the replacement shall be designated, and notification given to the Engineer within 24 h. The designated individual shall be trained as a level 1 or level 2 SWQM as specified within the contract documents. The SWQM training level shall meet or exceed the level required within the contract documents.

1. Level 1 SWQM

A level 1 SWQM shall have successfully completed the Department's Construction Stormwater Training course and hold a current training verification document for that

AGENDA

course.

2. Level 2 SWQM

A level 2 SWQM shall meet the requirements of 205.03(c)1, and hold a current certification as a CESSWI, or a CISEC, or a CPESC, or an approved equivalent.

3. SWQM Responsibilities

The SWQM shall attend the pre-disturbance meeting, in accordance with 205.03(d). The SWQM shall attend at least one meeting with the Contractor, relevant Subcontractors, and the Engineer per calendar month in any month in which weekly and post-event inspections are being completed and work is ongoing. The requirement to attend these meetings may be waived entirely or in part upon written approval from the Engineer.

The SWQM shall be responsible for ensuring that the Contractor's SWQCP has been submitted for review prior to implementation. Implementation of stormwater management shall include installation, inspection, maintenance, and removal of all BMPs. The SWQM shall also be in responsible charge of inspecting the implementation of the Contractor's SWQCP or the contract site plan. The SWQM shall be in responsible charge of the weekly and post-event inspections. Anyone performing inspections under the responsible charge of the SWQM shall, at a minimum, meet the training requirements of a level 1 SWQM.

The SWQM shall accompany personnel from IDEM or other regulatory or governmental agencies, as required, during site visits by those agencies.

(d) Pre-Disturbance Meeting

On contracts requiring an SWQCP, a pre-disturbance meeting shall be held on-site prior to beginning land-disturbing activities. The meeting invitees shall include the SWQM, the Contractor, the SWQCP Developer, appropriate Department field staff, the District Erosion Control Specialist, District Environmental Section Manager, Ecology and Waterway Permitting Specialist, and all relevant subcontractors for the work being performed. The pre-disturbance meeting shall be held not more than 30 days prior to the start of land-disturbing activities. The following shall be reviewed:

1. *Stormwater management implementation including phasing and sequencing.*
2. *Permit conditions and authorized impacts.*
3. *Relevant Unique and Recurring Special Provisions.*
4. *Relevant commitments.*

If requested in writing, pre-disturbance meeting requirements may be waived in part or in full subject to the approval by the Engineer. No land-disturbing activity shall begin until this meeting has occurred or until written approval to waive the meeting has been received.

AGENDA

(e) Temporary BMPs

Incoming and outgoing drainage areas impacting a work location shall have temporary BMPs installed as soon as practicable and prior to land-disturbing activities at those locations. Pipe end sections and anchors shall be installed when the structure is installed. If the pipe end sections or anchors cannot be placed at the same time, temporary riprap splashpads shall be placed at the outlets of the pipes until end sections or anchors can be installed.

Adjustments of the BMPs shall be made to satisfy field conditions and shall be subject to the Engineer's approval. Adjustments made to meet field conditions shall be made as soon as practicable, shall be maintained as necessary, and shall be noted in the SWQCP.

The Contractor shall provide a stable construction entrance at the points where construction traffic will enter onto an existing road. Where there is insufficient space for a stable construction entrance, other measures shall be taken to prevent the tracking of sediment onto the pavement. These temporary entrances shall be the responsibility of the Contractor to completely install, inspect, maintain, and remove.

A copy of the current manufacturer's installation and maintenance recommendations shall be provided prior to installation of manufactured BMPs. Shipping, handling, storage, and installation of manufactured BMPs shall be in accordance with the manufacturers' recommendations or as directed. In the event of conflict between the Department's specifications and the manufacturer's recommendations, the Contractor shall adhere to the more restrictive regulation or as directed.

Within the SWQCP, the Contractor shall provide a written plan for the collection, storage, and disposal of concrete wastewater that is adequate for the size of the concrete pour, the environmental conditions of the job site, and in accordance with 327 IAC 15-5-7(2) and 327 IAC 15-13-17(2)(F). An emergency concrete washout container shall be available, be part of the material handling and spill prevention plan, and available on-site during concrete pours. Straw bale washout pits will not be allowed. Concrete washout wastewater may either be recycled back into the truck, washed out into an adequately sized and lined roll off container or lined in-ground pit, an approved manufactured product, or taken back to the batch plant. Lining shall consist of a minimum of one sheet of 10 mil plastic, be continuous with no over lapping, and shall be free of leaks.

Concrete washout capacity shall not be exceeded. Concrete wastewater shall not be allowed to leak onto the ground, run into storm drains, or into any body of water. Where concrete wastewater leaks onto the ground, all contaminated soils shall be excavated and disposed of in accordance with 202.08 except that all costs associated with excavation and disposal shall be the responsibility of the Contractor.

The installation of BMPs shall include those necessary or required by permits at off-site locations such as borrow and disposal areas, field office sites, batch plants,

AGENDA

locations where the Contractor's vehicles enter and leave public roads, and other locations where work pertaining to the contract is occurring. The Contractor's SWQM shall be responsible for the installation, inspection, maintenance, and removal of these measures.

The Contractor shall employ dust control measures in accordance with 107.08(b).

(f) Posting Requirements

On contracts requiring a Construction Stormwater General Permit, or a 327 IAC 15-5 permit, directions to the updated field copy of the SWQCP, a copy of the NOI, and a copy of the NOS shall be posted and maintained so they are legible and visible at an agreed upon and publicly accessible location for the contract. In lieu of posting the NOI and NOS, an NOI with an IDEM time stamp 48 h prior to the beginning of operations shall also meet the posting requirements. On contracts requiring ~~water quality~~waterway permits the Contractor shall follow the posting requirements of those permits.

(g) Inspections

Inspections shall be required on all work areas associated with any waterway permit, a Construction Stormwater General Permit, or a 327 IAC 15-5 permit. This shall include drainage areas within contract limits leading to BMPs, areas of land-disturbance, and areas with impacts or potential impacts to protected resources. For contracts that have multiple work sites, inspections shall only be required for areas operating under a Construction Stormwater General Permit, or 327 IAC 15-5 permit, or a waterway permit.

On contracts requiring ~~water quality~~waterway permits and not requiring a Construction Stormwater General Permit or a 327 IAC 15-5 permit, inspections shall be conducted at a minimum of once per calendar week. Inspections for these contracts shall stop once the Engineer has accepted, in writing, that the disturbed areas are permanently stabilized and that all temporary measures have been removed.

On contracts requiring a Construction Stormwater General Permit or 327 IAC 15-5 permit, inspections shall be performed at a minimum of once per calendar week and also by the end of the next work day following every 1/2 in. or greater rain event. A single inspection performed after a rain event shall satisfy the requirement for both the rain event and the weekly inspection. Inspections for these contracts shall stop once all disturbed areas are permanently stabilized, all temporary measures have been removed, and the NOT has been obtained.

Inspection reports shall be submitted by the SWQM within 24 h of the day of the inspection. The inspection reports shall be documented and submitted electronically using the current version of the Department's stormwater inspection management report which is available on the Department's website. A paper inspection form shall only be used in the event that the electronic inspection form is out of service or as directed. Inspections shall begin when the installation of BMPs start, when land disturbing activities begin, or if potential impacts to protected resources will occur, whichever is earliest.

AGENDA

On contracts not requiring a Construction Stormwater General Permit or 327 IAC 15-5 permit, and if requested in writing, the Engineer may temporarily waive the requirement to complete weekly inspections during the winter months, or when the prosecution of work is temporarily discontinued, or when the inspection areas are stabilized to minimize the potential for off-site sedimentation.

(h) Permanent BMPs

Permanent BMPs shall be incorporated into the work at the earliest practicable time.

205.04 Temporary Surface Stabilization

Non-vegetated areas shall be temporarily stabilized if the area remains inactive for more than seven days. The area will be considered inactive when no meaningful work toward accomplishing a pay item has been performed at a site of land-disturbing activity. Stabilization methods shall be in accordance with the SWQCP, or as directed.

(a) Seed

Temporary seeding shall be placed on disturbed areas that are expected to be inactive for more than seven days, or as agreed to by the Contractor and the Engineer. Seed shall be placed either by drilling in, spraying in a water mixture, or by use of a mechanical method which places the seed in direct contact with the soil. Where inaccessible to mechanical equipment, or where the area to be seeded is small, a hand operated cyclone seeder or other approved equipment may be used. Seed shall not be covered more than 1/2 in. Seed shall be distributed utilizing approved methods which allow for even distribution of the seed. If as a result of a rain event, the prepared seed bed becomes rutted, crusted or eroded, or depressions exist, the soil shall be reworked until it is smooth. Reworked areas shall be re-seeded. All seeded areas shall be mulched within 24 h after seeding.

Temporary seed shall be used for surface stabilization and temporary ground cover. Temporary cover mixtures shall be placed and be subject to seasonal limitations as defined herein. This mixture is not intended to be used as a permanent seed mixture. This mixture shall not be used to satisfy the requirements of the warranty bond. The mix shall be spray mulched where the slope is steeper than 3:1. From June 16 through August 31, mulching alone shall be used to stabilize the soil.

1. Spring Mix

Spring mix shall be used from January 1 through June 15. This mixture shall be applied at the rate of 150 lb/ac. The mix shall consist of oats.

2. Fall Mix

Fall mix shall be used from September 1 through December 31. This mixture shall be applied at the rate of 150 lb/ac. This mix shall consist of winter wheat.

AGENDA

Unless otherwise specified in the SWQCP or the contract site plan, fertilizer shall be spread uniformly over the area to be seeded and shall be applied at 1/2 the rate shown in 621.05(a). Fertilizer shall only be applied during the active growing season March through November.

(b) Mulch

Mulch shall be applied uniformly in a continuous blanket at the rate of 2.5 t/ac. If areas are seeded, mulch shall be placed within 24 h after seeding. The percent of moisture in the mulch shall be determined in accordance with 621.14(c). Mulch shall be placed in accordance with one of the following types or as directed.

On a slope flatter than 3:1, or where specified, type A shall be used. On a slope of 3:1 or steeper but flatter than 2:1, or where specified, type B or type C may be used. On a slope of 2:1 or steeper, or where specified, a manufactured surface protection product, in accordance with 205.04(c), shall be used.

1. Type A

Mulch shall be punched into the soil so that it is partially covered. The punching operation shall be performed parallel to the contour of the slope. The tools used for punching purposes shall be disks that are notched and have a minimum diameter of 16 in. The disks shall be flat or uncupped. Disks shall be placed a minimum of 8 in. apart. Shaft or axle sections of disks shall not exceed 8 ft in length.

The disk for punching shall be constructed so that weight may be added or hydraulic force may be used to push puncher into the ground. An even distribution of mulch shall be incorporated into the soil.

2. Type B

The mulch shall be held in place by means of commercially produced water borne mulch binder product. The product shall be manufactured and used in accordance with all applicable State and Federal regulations and shall be applied in accordance with the manufacturer's written instructions. A copy of the written instructions shall be supplied to the Engineer prior to the seeding work. The product shall include a coverage indicator to facilitate visual inspection for evenness of application. If the mulch fails to stay in place, the Contractor shall repair all damaged areas.

3. Type C

The mulch shall be held in place with a polymeric plastic net. The plastic net shall be unrolled such that it lays out flat, evenly, and smoothly, without stretching the material. The plastic net shall be held in place by means of staples. The staples shall be driven at a 90° angle to the plane of the soil slope. Staples shall be spaced not more than 4 ft apart with rows alternately spaced. The plastic net shall be secured along the top and bottom of the soil slope with staples spaced not more than 1 ft on center. The ends and edges of the plastic net shall be overlapped approximately 4 in. and stapled. Overlaps running parallel to the slope shall be stapled 1 ft on center and overlaps running perpendicular to the slope

AGENDA

shall be stapled at least 3 ft on center. The plastic net shall be placed with the length running from top of slope to toe of slope, or the plastic net shall be placed with the length running horizontally or parallel to the contour.

(c) Manufactured Surface Protection Products

Prior to placing a manufactured surface protection product, the area to be covered shall be free of all rocks or clods of over 1 1/2 in. in diameter, and all sticks or other foreign material, which prevent the close contact of the blanket with the seed bed.

After the area has been properly shaped, fertilized, and seeded, the manufactured surface protection product shall be laid out flat, evenly, and smoothly, without stretching the material.

Manufactured surface protection products may be used for covering an area that has not been seeded. Soil cover shall not be used to cover seeded areas.

1. Excelsior Blanket

An excelsior blanket may be used as mulch for seeding where seeding is specified or where erosion control blanket is specified. Excelsior blankets shall be placed within 24 h after seeding operations have been completed. Excelsior blankets shall be installed in accordance with the manufacturer's recommendations.

2. Straw Blanket

A straw blanket may be used as mulch for seeding where mulched seeding is specified or where erosion control blanket is specified. Straw blankets shall be placed within 24 h after seeding. The straw blanket shall be unrolled over the designated area so that the plastic mesh is on top and the straw fibers are snugly and uniformly in contact with the soil surface. The rolls shall be butted together and stapled in place. The staples shall be driven through the blanket at a 90° angle to the plane of the ground surface. Each staple shall anchor the plastic mesh. The staples shall be spaced in accordance with the manufacturer's recommendations.

For placement on a slope, the straw blankets shall be placed with the length running from the top of slope to the toe of slope and shall extend a minimum of 3 ft over the crown of the slope. The blanket shall be stapled in accordance with the manufacturer's recommendations.

For placement in ditch lines, the straw blanket shall be unrolled parallel to the centerline of the ditch. The blanket shall be placed so that there are no longitudinal seams within 24 in. of the bottom centerline of the ditch. In a ditch line, the blanket shall be stapled in accordance with the manufacturer's recommendations with a minimum of six staples across the upstream end of each roll.

3. Rolled Erosion Control Products

The Contractor shall use degradable RECPs including netting, open weave textile,

AGENDA

and erosion control blankets.

Seed shall be applied in accordance with 621 unless soil infilling is required.

If soil infilling is required, RECP shall be first installed and then seed applied and brushed or raked 1/4 to 3/4 in. of topsoil into voids in the RECP filling the full product thickness. Staples of at least 6 in. in length shall be used to secure the RECP. The RECP shall be unrolled parallel to the primary direction of flow and placed in direct contact with the soil surface. The RECP shall not bridge over surface inconsistencies. Edges of adjacent RECP shall be overlapped by 2 to 4 in. Staples shall be placed to prevent seam separation in accordance with the manufacturer's recommendations.

4. Geotextile

Disturbed soil shall be covered with geotextile. The covering shall be placed over the exposed soil in a shingle like fashion with a 2 ft minimum overlap covering all loose or disturbed soil. The geotextile, if new, shall be in accordance with 918.02. The geotextile used for soil covering need not be new but shall not have holes or unrepaired rips or tears. All repairs shall be made in accordance with the manufacturer's recommendation.

205.05 Concentrated Flow Protection

(a) Check Dam

Check dams and modified check dams shall be constructed as shown on the plans. Geotextile for check dams shall be in accordance with 616 unless otherwise specified. Temporary revetment riprap shall be in accordance with 616. No. 5 and No. 8 filter stone shall be in accordance with 904.

(b) Check Dam, Traversable

Traversable check dams shall be composed of 8 in. minimum diameter socks filled with straw, ground wood chips, shredded bark, or other approved material for site specific conditions. Rolls and socks may be stacked in a triangle pattern as shown on the plans. Check dams shall be staked as shown on the plans or as specified by the manufacturer.

(c) Diversion Interceptors

Grading for diversion interceptors shall be in accordance with 203 with the exception that compaction requirements will not apply. The Contractor shall identify the construction areas which shall utilize diversion type A or B. Slope drains shall be provided at the low points of the diversion interceptor. Perimeter diversion, type C shall be installed prior to earth moving activities and shall be immediately stabilized. Type A or B shall be stabilized if anticipated to be left in place for more than seven calendar days.

(d) Sediment Traps

Sediment traps shall be constructed with revetment riprap, filter stone and geotextile.

AGENDA

(e) Sediment Basins

Embankment construction shall be in accordance with 203. Temporary revetment riprap used for overflow protection shall be in accordance with 904, unless otherwise specified in the SWQCP. Sediment basins shall be constructed as shown on the plans, or as specified in the SWQCP. Sediment basins shall be designed to provide a minimum storage volume to contain the runoff from a 10 year, 24 h, storm event. When required, water shall be withdrawn from the top of the water column. Basin slopes shall be stabilized upon achieving design grades. Outfalls shall be stabilized within 24 h of installation of the basin outlet.

(f) Slope Drains

Slope drain pipes shall be lengthened as required due to the construction of the embankment.

(g) Vegetative Filter Strips

Designated vegetative filter strips shall not be disturbed. Rills that form shall be repaired. Fertilizer shall be applied as specified in the SWQCP.

(h) Splashpads

Splashpads shall be constructed using revetment riprap on geotextile, or other approved material for site specific conditions and shall be sized to prevent erosion or scour.

(i) Inlet Protection

All inlets shall have sediment control measures installed when the drainage area contributing to the inlet is affected by land-disturbing activity, adjacent to hauling operations, adjacent to disturbed areas, or as directed. A copy of the current manufacturer's installation and maintenance recommendations shall be provided prior to installation of manufactured inlet protection in accordance with 205.03(e). All inlet protection devices shall provide a means of emergency overflow. Geotextile wrapped under or over a grate shall not be used.

205.06 Perimeter and Resource Protection

(a) Silt Fence

Shipping, handling and storage shall be in accordance with the manufacturer's recommendations. Silt fence material shall be in accordance with 918.02(d). The silt fence material will be rejected if it has defects, tears, punctures, flaws, deterioration, or damage incurred during manufacture, transportation, storage, or installation. Each roll shall be labeled or tagged to provide product identification.

Joints shall be made from the ends of each section of fence wrapped around a wood stake and joined together or other method recommended by the manufacturer. Copies of all current manufacturer manuals shall be provided prior to installation. Silt fence shall

AGENDA

not be used in conveyance channels, areas prone to flooding, or areas of concentrated flow.

(b) Filter Sock

Filter sock shall be designed for filtration or diversion depending on its intended use. Filter sock shall be installed, secured and overlapped in accordance with the standard drawings. The manufacturer's specifications for installation may be substituted with the approval of the Engineer. Filter sock shall be in accordance with 914.09 (h).

(c) Filter Berm

Filter berms shall be constructed of filter sock, or a combination of riprap or No. 5 and No. 8 filter stone.

(d) Protected Resource Fence

Protected resource fence shall be a commercially available material marketed as snow fencing, have a minimum height of 4 ft and be made of high density polyethylene. All protected resource fence shall be orange in color. Protected resource fence shall be installed using T-posts spaced no more than 10 ft apart and secured with plastic fence ties. Pull posts and corner posts will not be required. T-posts shall be buried to 1/3 of their height.

(e) Protected Resource Signs

Within areas prone to flooding, or concentrated flow "Do Not Disturb" signs in accordance with 622.20 may be accepted in lieu of fencing, if requested and accepted in writing prior to installation. If "Do Not Disturb" signs are used in lieu of fencing, they shall be spaced at a distance of 25 ft apart to delineate the entire length of concern. At a minimum, two signs shall be used.

205.07 Maintenance

BMPs shall be inspected in accordance with 205.03(g). If conditions do not allow the Contractor access to the location of the BMPs using normal equipment and maintenance, the Contractor shall submit to the Engineer an acceptable written alternate schedule, within 48 h, to bring the BMPs back into compliance.

(a) Filter Sock

Accumulated sediment shall be removed once it reaches 1/2 of the height of the filter sock when used for perimeter protection and 1/3 the height when used for inlet protection. The filter sock shall be inspected to ensure that it is holding its shape and allowing adequate flow. Eroded and damaged areas shall be repaired.

(b) Silt Fence

If the fence fabric tears, starts to decompose, or becomes ineffective, the affected portion shall be replaced. Deposited sediment shall be removed once it reaches 1/3 the height of the fence at its lowest point. Once the contributing drainage area has been stabilized, the Contractor shall remove the fence and sediment deposits, grade the site to

AGENDA

blend with the surrounding area, and stabilize the graded area.

(c) Filter Berm

Accumulated sediment shall be removed once it reaches 1/4 of the height of the filter berm. The filter berm shall be inspected to ensure that it is holding its shape and allowing adequate flow. Eroded and damaged areas shall be repaired.

(d) Inlet Protection

Accumulated sediment shall be removed once identified and after each storm event. Flushing with water will not be allowed. The sediment shall not be allowed to re-enter the paved area or storm drains. Manufactured inlet protection shall be maintained in accordance with the manufacturer's recommendations.

(e) Check Dams

Sediment shall be removed once it reaches 1/2 the height of the check dam. Sediment shall be removed and disposed of in accordance with 201.03 and 203.08. The Contractor shall rebuild or repair each damaged check dam to maintain the design height, cross section, and control function.

(f) Sediment Traps

Following each rain event, the Contractor shall repair slope erosion and piping holes as required. Sediment shall be removed once it has accumulated to 1/2 design volume. The Contractor shall replace the coarse aggregate filter stone if the sediment pool does not drain within 72 h following a rain event.

(g) Sediment Basin

Sediment shall be removed once it has accumulated to 1/2 the design volume. The filter stone around the riser pipe shall be replaced if the sediment pool does not drain within 72 h following a rain event.

(h) Concrete Washout

The containment system shall be inspected for leaks, spills, and tears, and shall be repaired or replaced as necessary. The Contractor shall ensure that each containment system maintains adequate capacity. Solidified waste concrete shall be disposed of in accordance with 202.

(i) Protected Resource Fence

Protected resource fence shall be maintained in an upright position with no tears or missing sections.

(j) Protected Resource Signs

Protected resource signs and posts shall be maintained in an upright and legible condition.

205.08 Stormwater BMP Deficiencies

AGENDA

If the Engineer documents deficient BMPs at any time during a contract, including the time during seasonal suspension, written notification of the deficiency will be provided to the Contractor.

a) Emergency Deficiencies

Emergency deficiencies shall include:

1. *Discharge of wastewater into a drainage structure, jurisdictional waterway, or similar environmental resource.*

2. *Failure to comply with the conditions and commitments of the contract ~~environmental~~waterway permits and regulations.*

3. *Beginning land-disturbing activities without the Engineer's acceptance of a submitted SWQCP or prior to the pre-disturbance meeting, if not waived by written permission.*

Corrective actions for emergency deficiencies must be completed no later than 24 h after notification, including weekends or holidays.

b) General Deficiencies

General deficiencies shall include:

1. *Failure to install, construct, or maintain BMPs as shown on the plans or the accepted SWQCP.*

2. *Failure to perform a site inspection as required by 205.03(g).*

3. *Deficiencies as listed in 205.08(c).*

Corrective actions for general deficiencies shall be completed within 48 h of notification or as directed.

For unresolved emergency or general deficiencies, the Engineer may suspend work on the contract except for that work necessary to correct the deficiencies, for traffic maintenance, and for the protection of life and property until the deficiencies are corrected. Delays caused by these deficiencies will be considered non-excusable delays in accordance with 108.08(c).

c) Quality Adjustments

If emergency deficiencies are not remedied within 24 h after written notification, or within 48 h after written notification for general deficiencies, the Contractor may be assessed quality adjustments. When an alternate schedule is accepted by the Engineer, in accordance with 205.07, and that schedule is not met, the Contractor may be assessed quality adjustments.

AGENDA

In accordance with 109, the Contractor may be assessed quality adjustments of $200 for each deficiency per calendar day, or part thereof, that the deficiency remains uncorrected after the initial notification period. No quality adjustments will accrue without prior written notification from the Engineer of the deficiency.

Permit postings will be considered deficient and subject to quality adjustments if they do not meet the requirements of the permitting agency or the requirements listed in 205.03(f).

Each contiguous 100 ft section, or portion thereof, of silt fence will be considered deficient and subject to quality adjustments if the fence material has a cut or tear exceeding 1 ft in length, or a seam has separated, or the retained sediment exceeds 1/2 of the height of the fence, or the fence is not installed as shown in the Standard Drawings.

Each contiguous 50 ft section, or portion thereof, of filter sock will be considered deficient and subject to quality adjustments if it is not installed and maintained in accordance with the Standard Drawings and the manufacturer's recommendations.

Each check dam, sediment basin, or sediment trap will be considered deficient and subject to quality adjustments if stormwater circumvents the measure, or the retained sediment exceeds 1/2 of the design volume, or they are not installed in accordance with the accepted SWQCP, as shown on the plans, or the contract site plan.

Inlet protection devices will be considered deficient and subject to quality adjustments if stormwater circumvents the measure, or they are not installed and maintained in accordance with the manufacturer's recommendations, or they do not provide a means of emergency overflow lower than the adjacent roadway, or the accumulated sediment exceeds 1/2 of the capacity of the device.

Manufactured BMPs will be considered deficient and subject to quality adjustments if stormwater circumvents the measure, or they are not installed and maintained in accordance with the manufacturer's recommendations.

Other BMPs will be considered deficient and subject to quality adjustments if they are not installed in accordance with the accepted SWQCP, as shown on the plans, the contract site plan, or they are not maintained adequately to perform their intended function.

For any specific deficiency, quality adjustments will cease accruing when that specific deficiency is corrected. Site inspection quality adjustments will cease accruing when the next acceptable inspection is performed.

205.09 Removal

BMPs shall be removed as soon as an area becomes stable. All BMPs shall be

AGENDA

removed prior to application for the NOT. The Contractor shall remove and dispose of all excess silt accumulations, dress the area, and reestablish vegetation to all bare areas in accordance with the contract requirements. Use or disposal of the BMPs shall be as specified in the SWQCP.

205.10 Method of Measurement

Temporary silt fence and traversable check dams will be measured by the linear foot.

Protected resource fence will be measured by the linear foot, installed and removed. Measurement will be made along the top of the fence from outside to outside of end posts for each continuous run of fence.

Protected resource signs, temporary sediment basins, standard metal end sections, and temporary inlet protection will be measured by the number of complete units installed.

Temporary revetment riprap check dams, temporary revetment riprap, temporary sediment traps, splashpads, temporary filter stone, temporary mulch, No. 2 stone for stable construction entrances, and fertilizer will be measured by the ton.

Temporary mulch stabilization, manufactured surface protection products, and temporary geotextile will be measured by the square yard.

Temporary seeding will be measured by the pound.

Removal of sediment will be measured by the cubic yard.

Temporary slope drains will be measured by the linear foot. Measurement will be made for the maximum footage in place at one time, per drain location regardless of the number of times the material is moved.

Temporary filter berms and filter sock will be measured by the linear foot complete in place. Overlapping sections of filter sock will not be measured for payment.

Revetment riprap and filter stone used in sediment basins will be measured by the ton.

Excavation for detention ponds, temporary sediment traps and temporary sediment basins will be measured as common excavation in accordance with 203.27.

Diversion interceptors type A and B, and interceptor ditches will not be measured for payment. Diversion interceptors type C will be measured by the linear foot.

Mobilization and demobilization for surface stabilization will be measured by each trip as provided in the submitted and accepted SWQCP.

AGENDA

Weekly inspections will be measured by the number of specified weekly inspections conducted after the original contract completion date.

SWQCP Preparation and Stormwater Management Implementation will not be measured for payment.

BMPs used at the off-site locations in accordance with 205.03 and concrete washouts will not be measured for payment.

205.11 Basis of Payment

The accepted quantities of diversion interceptors type C, protected resource fence, silt fence, and traversable check dams will be paid for at the established unit price per linear foot.

Protected resource signs, temporary sediment basins, standard metal end sections, and temporary inlet protection will be paid for at the established unit price per each unit installed.

Temporary revetment riprap check dams, temporary revetment riprap, temporary sediment traps, splashpads, temporary filter stone, temporary mulch, No. 2 stone for stable construction entrances, and fertilizer will be paid for at the established unit price per ton.

Temporary mulch stabilization, manufactured surface protection products, and temporary geotextile will be paid for at the established unit price per square yard.

Temporary seeding will be paid for at the established unit price per pound.

Removal of sediment will be paid for at the established unit price per cubic yard.

Temporary slope drains, temporary filter berms, and filter sock will be paid for at the established unit price per linear foot. No additional payment will be made for any required overlapping sections of filter sock.

Revetment riprap and filter stone used in sediment basins will be paid for at the established unit price per ton.

The accepted quantities of excavation for detention ponds, temporary sediment traps, and temporary sediment basins will be paid for as common excavation in accordance with 203.28.

~~Payment for m~~Mobilization and demobilization for surface stabilization will be paid for at the established unit price per each and will be made for the initial movement to the project site, and for each occurrence as specified in the submitted and accepted SWQCP, or as directed.

AGENDA

Weekly inspections will be paid for at the established unit price per each for inspections conducted after the original contract completion date. No payment will be made for inspections during the time when liquidated damages, in accordance 108.09, are assessed.

The Department will include the pay item Stormwater Management Budget, with an established dollar amount, in the proposal to pay for BMP work. This established amount is the Department's estimate of the total cost of the BMP work required to be performed for the contract. The established amount shown in the proposal is included in the total bid amount. The Department will pay for those items installed and listed with established prices for the quantities installed as specified in the submitted and accepted SWQCP. If the BMP work exceeds the Department's estimated amount, the additional BMPs shall be explained and submitted as a revision to the SWQCP. The additional work will be reviewed for acceptance in accordance with 104.03 except that the additional BMP work will be paid for at the pre-determined established prices shown.

The Department will pay to replace BMPs that have failed due to differing site conditions or significant changes in the character of work in accordance with 104.02, if those BMPs have been installed and maintained in accordance with the accepted SWQCP, as shown on the plans, or the contract site plan.

The Department will pay to replace BMPs that have failed after exceeding the lifespan of the BMP, as specified in the manufacturer's guidelines, if those BMPs were installed and maintained in accordance with the accepted SWQCP, as shown on the plans, or the contract site plan. Payment will be at the established prices shown in 205.11 and may occur no more than once per year.

The item SWQCP Preparation will be paid for based on the highest total number of construction phases for the contract. The highest total number of phases will be based on either the number of phases established within the original contract documents or the number of phases proposed in the SWQCP. The initial submitted and accepted SWQCP shall list the number of construction phases. Payments on the item will be made after a SWQCP phase has been reviewed and accepted. ~~Item payments will be made in accordance with~~The payment portion of the SWQCP Preparation lump sum item will be calculated as follows:

$$\cancel{SWQCP\ payment = 1.00 - \left(1.00 - \left(\frac{(P_{sa})}{(P_t)}\right)\right)}$$

$$SWQCP\ payment\ = P_{sa}/P_t$$

Where:

P_{sa} = *Total number of ~~S~~submitted and accepted phases of the SWQCP.*
P_t = *~~Highest t~~Total number of construction phases established for the contract.*

~~The item~~ Stormwater Management Implementation will be paid for as specified in the contract documents. After the ~~initial phase of the SWQCP or the~~ contract site plan or the initial phase of the SWQCP has been submitted and accepted, 25% of the Stormwater Management Implementation bid price will be paid. The balance will be paid as the plan is implemented over the life of the contract. Stormwater Management Implementation shall include any costs beyond the established prices associated with the inspection, installation, maintenance, and removal including mobilization and demobilization of all temporary BMPs. A Stormwater Management Implementation item cost breakdown shall be provided within the contract site plan or the SWQCP. Items shown with an established price will be paid for at the prices shown. If any of the following items are shown in the schedule of pay items, the bid item and price will prevail over the established prices shown.

Payment will be made under:

Pay Item	***Pay Unit Symbol***	***Established Price***
Diversion Interceptor Type C	*LFT*	*$22.50*
Fertilizer	*TON*	*$775.00*
Filter Sock	*LFT*	*$5.50*
Manufactured Surface Protection Product	*SYS*	*$1.35*
Mobilization and Demobilization for Surface Stabilization	*EACH*	*$700.00*
No. 2 Stone	*TON*	*$30.00*
Protected Resource Fence	*LFT*	*$2.00*
Protected Resource Sign	*EACH*	*$80.00*
Sediment, Remove	*CYS*	*$22.00*
Splashpad	*TON*	*$60.00*
Standard Metal End Section	*EACH*	*$365.00*
Stormwater Management Budget	*DOL*	
Stormwater Management Implementation	*LS*	
SWQCP Preparation	*LS*	
Temporary Check Dam, Revetment Riprap	*TON*	*$65.00*
Temporary Check Dam, Traversable	*LFT*	*$16.00*
Temporary Filter Berm	*LFT*	*$16.00*
Temporary Filter Stone	*TON*	*$45.00*
Temporary Geotextile	*SYS*	*$2.75*
Temporary Inlet Protection	*EACH*	*$110.00*
Temporary Mulch Stabilization	*SYS*	*$0.30*
Temporary Mulch	*TON*	*$425.00*
Temporary Revetment Riprap	*TON*	*$60.00*
Temporary Sediment Basin	*EACH*	*$3,200.00*
Temporary Sediment Trap	*TON*	*$42.50*
Temporary Seed	*LBS*	*$2.75*

AGENDA

Temporary Silt Fence.....LFT.....$2.15
Temporary Slope Drain.....LFT.....$21.50
Weekly Inspection.....EACH $425.00

The cost for revisions or amendments to permits required due to the Contractor's means and methods shall be included in the cost of SWQCP Preparation.

The cost for any future revisions to the SWQCP due to the Contractor's means and methods shall be included in the cost of SWQCP Preparation.

The costs for trenching, backfilling, posts, fencing, and all necessary incidentals shall be included in the cost of temporary silt fence.

The costs for protected resource fence shall include all materials, placement, removal, maintenance, and all necessary incidentals.

The costs for protected resource signs shall include all materials, placement, removal, maintenance, and all necessary incidentals.

The cost for stakes, trenching, backfilling, posts, and all necessary incidentals shall be included in the cost of temporary check dams, traversable.

The payment for temporary sediment basin shall include all costs involved with construction of the basin except for excavation, revetment riprap, and filter stone.

The payment for temporary sediment trap shall include all costs involved with construction of the trap except for excavation.

Temporary entrances utilized by the Contractor for borrow and waste areas will not be paid for directly.

The costs for diversion interceptor types A and B and interceptor ditches shall be included in the cost of other earth moving items.

The cost for anchors and all incidentals necessary to perform the work shall be included in the cost of temporary slope drains.

The costs of materials, installation, inspection, maintenance, and removal of BMPs at off-site locations designated in 205.03 will not be measured for payment.

The payment for BMPs specified herein shall include materials, installation, maintenance, removal, and proper disposal~~, except for the removal of sediment~~.

The costs associated with sediment removal due to BMP maintenance shall be included in the cost of sediment removal.

AGENDA

The costs associated with the replacement of temporary filter stone due to BMP maintenance will be paid for as temporary filter stone.

The costs of constructing, maintaining, and removal of the construction entrance, other than those constructed by the Contractor for borrow and waste sites, shall be included in No. 2 stone. No direct payment will be made for construction entrances for borrow and waste sites.

The costs associated with concrete washout will not be paid for directly but shall be included in the costs of other concrete pay items.

All costs associated with the weekly and post-event inspections, including inspections required by regulatory agencies, and all other inspections conducted prior to the original contract completion date, shall be included in the cost of Stormwater Management Implementation.

AGENDA

COMMENTS AND ACTIONS

205-R-706 STORMWATER MANAGEMENT

DISCUSSION:

Motion: Second: Ayes: Nays: FHWA Approval:	Action: ___ Passed as Submitted ___ Passed as Revised ___ Withdrawn
Standard Specifications Sections referenced and/or affected: 205 pg 191 thru 207. Recurring Special Provision references in: 205-R-706 STORMWATER MANAGEMENT Standard Drawing affected: NONE Design Manual Sections affected: Chapter 205 GIFE Sections cross-references: Section 3.1	___ 2022 Standard Specifications ___ Revise Pay Items List ___ Create RSP (No.___) Effective: RSP Sunset Date: ___ Revise RSP (No.___) Effective: RSP Sunset Date: ___ Standard Drawing Effective: ___ Create RPD (No. ___) Effective: ___ GIFE Update ___ SiteManager Update

AGENDA