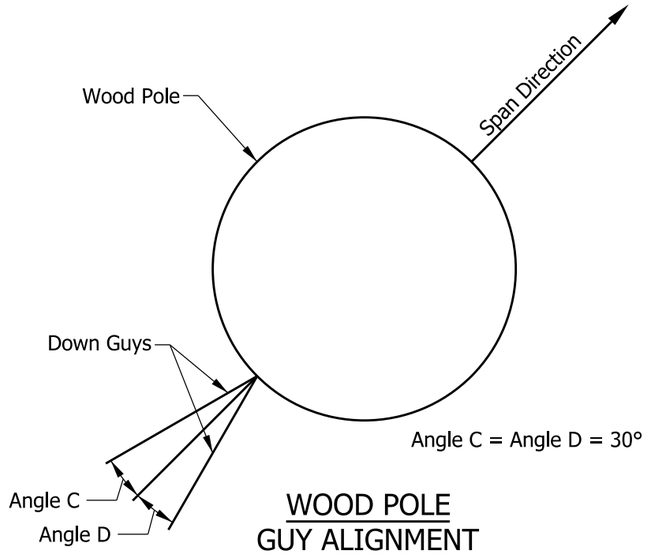

WOOD POLE
GUY ALIGNMENT
(1 Span)

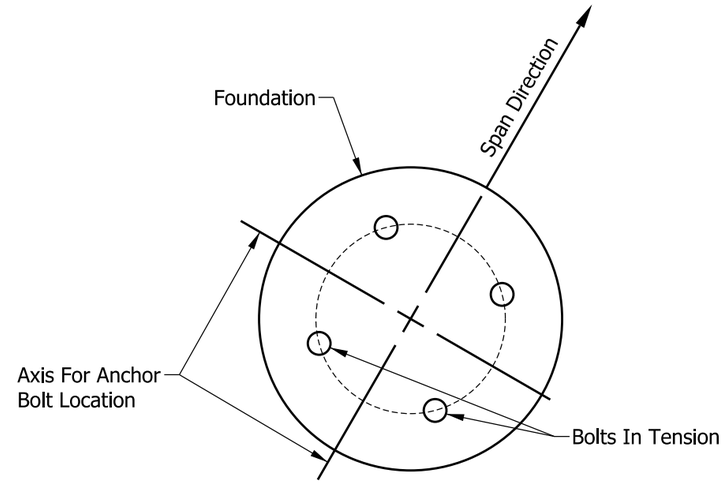

STEEL STRAIN POLE
ANCHOR BOLT ORIENTATION
(1 Span)

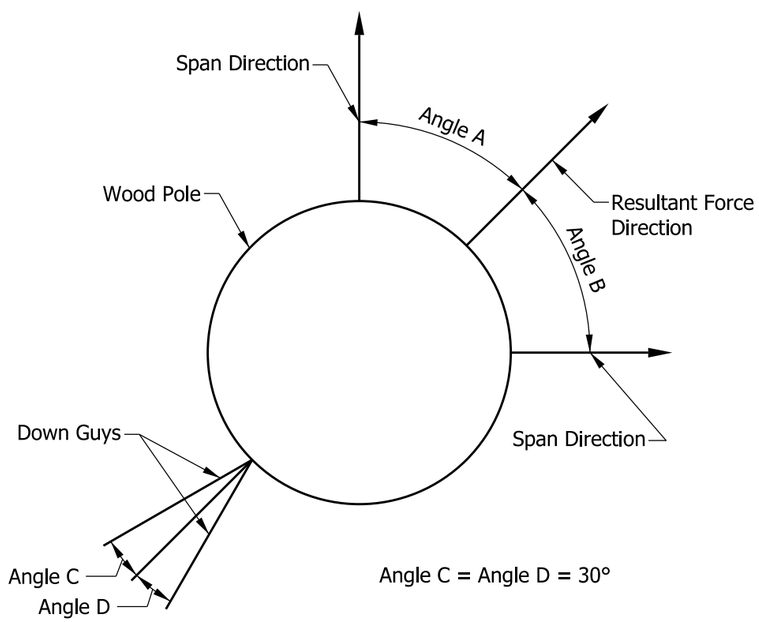

WOOD POLE
GUY ALIGNMENT
(2 Spans)

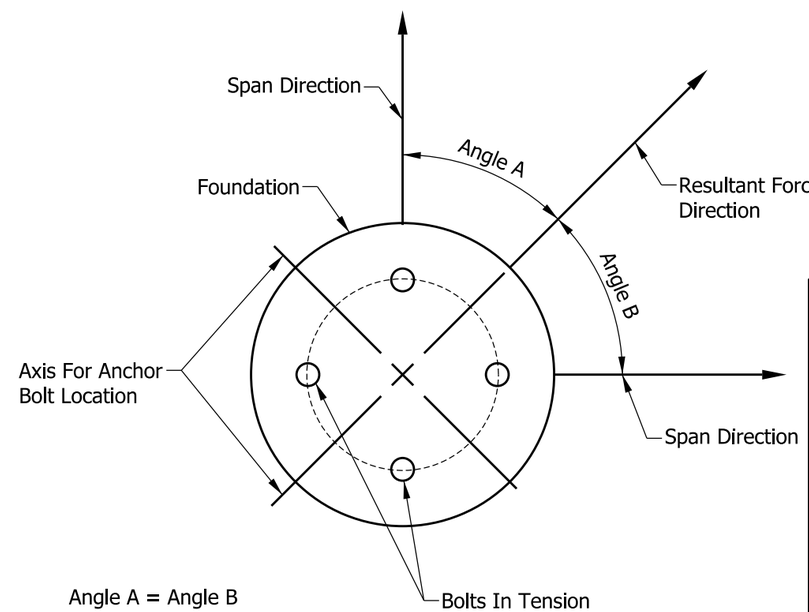

STEEL STAIN POLE
ANCHOR BOLT ORIENTATION
(2 Spans)

INDIANA DEPARTMENT OF TRANSPORTATION

POLE ALIGNMENT

SEPTEMBER 2013

STANDARD DRAWING NO. E 805-SGSC-01

ALFREDO B. HANZA
REGISTERED
No.
60020657
STATE OF
INDIANA
PROFESSIONAL ENGINEER

DETAILS PLACED IN THIS FORMAT 09/01/15

/s/ Alfredo B. Hanza 02/27/13
SUPERVISOR, TRAFFIC DESIGN DATE

/s/ Mark A. Miller 03/27/13
CHIEF ENGINEER DATE

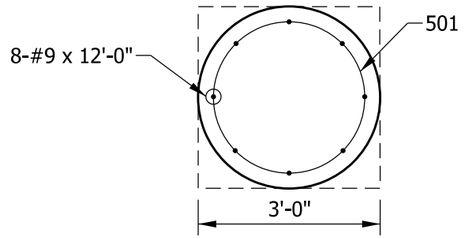

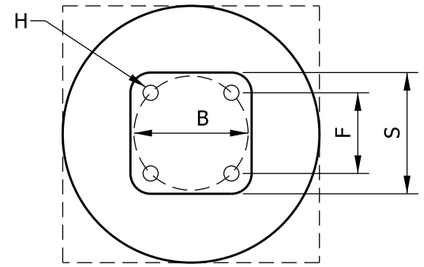

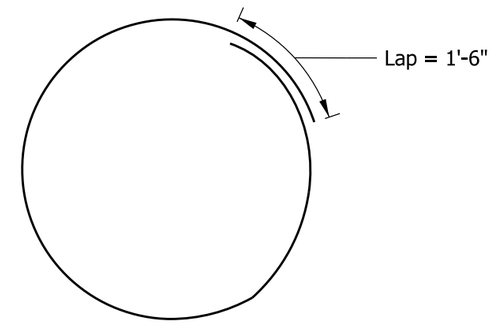

501 x 9'-4"

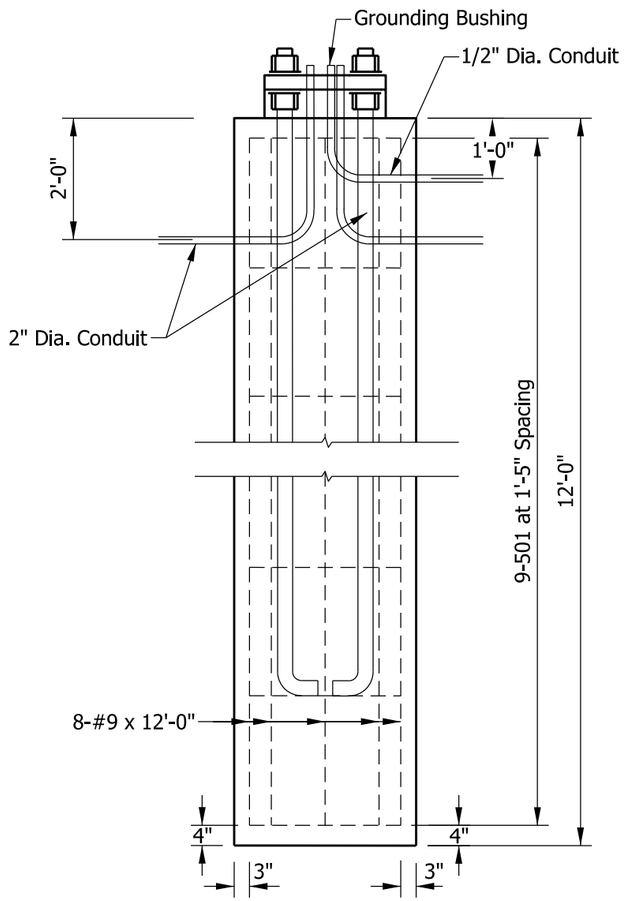

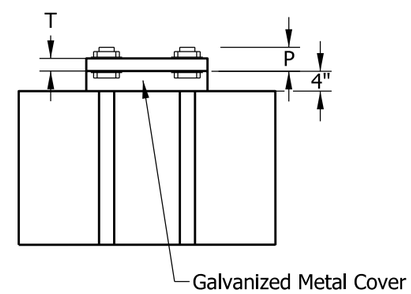

BASE PLATE AND ANCHOR BOLT DATA								
Anchor Bolts	B	F	H	P	S	T	Pole Size	Foundation
2 1/4" x 8'-0"	1'-10"	1'-3 1/2"	2 3/4"	4 3/4"	1'-11"	2 1/2"	1'-3" x 30' 1'-5" x 36'	3'-0" x 12'

INDIANA DEPARTMENT OF TRANSPORTATION

STEEL SIGNAL STRAIN POLE
FOUNDATION DETAILS

SEPTEMBER 2013

STANDARD DRAWING NO. E 805-SGSC-02

ALFREDO B. HANZA
REGISTERED
No.
60020657
STATE OF
INDIANA
PROFESSIONAL ENGINEER

DETAILS PLACED IN THIS FORMAT 09/01/15

/s/ Alfredo B. Hanza 02/27/13
SUPERVISOR, TRAFFIC DESIGN DATE

/s/ Mark A. Miller 03/27/13
CHIEF ENGINEER DATE

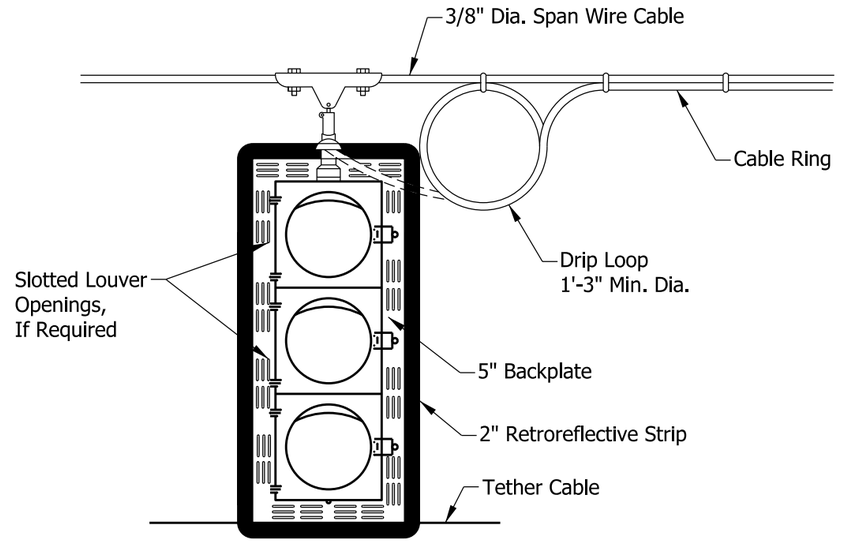

SPAN-HEAD ATTACHMENT

NOTES:

1. Installation is the same for steel strain poles except pole bands will be used.
2. Aircraft cable shall use a heavy closed wire rope thimble at contact with pole bands.

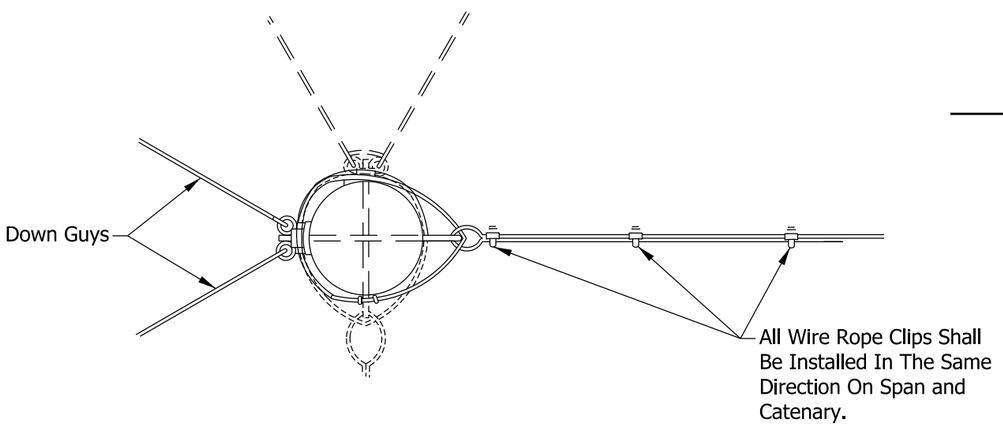

TOP VIEW

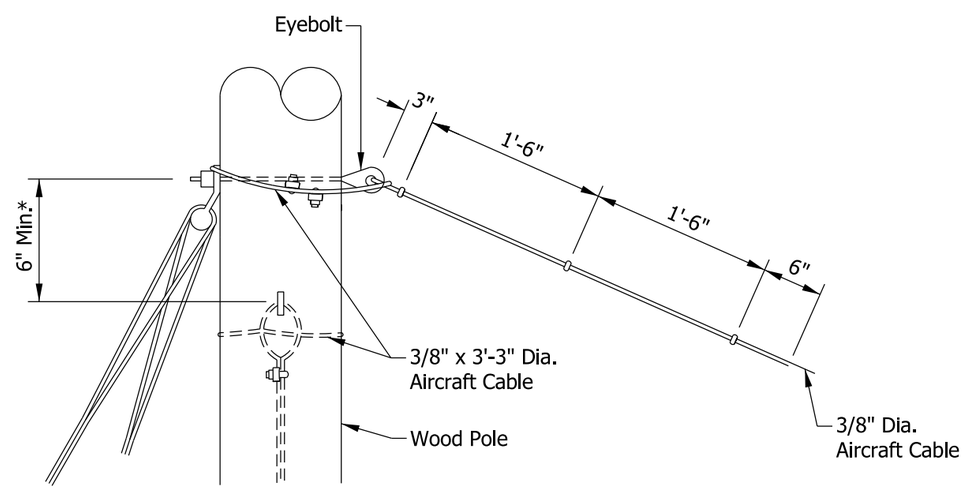

SAFETY CABLE AND EYE BOLT DETAIL

* If more than one catenary is attached to pole.

INDIANA DEPARTMENT OF TRANSPORTATION

CABLE SPAN ATTACHMENT

SEPTEMBER 2013

STANDARD DRAWING NO. E 805-SGSC-03

ALFREDO B. HANZA
REGISTERED
No.
60020657
STATE OF
INDIANA
PROFESSIONAL ENGINEER

DETAILS PLACED IN THIS FORMAT 09/01/15

/s/ Alfredo B. Hanza 02/27/13
SUPERVISOR, TRAFFIC DESIGN DATE

/s/ Mark A. Miller 03/27/13
CHIEF ENGINEER DATE

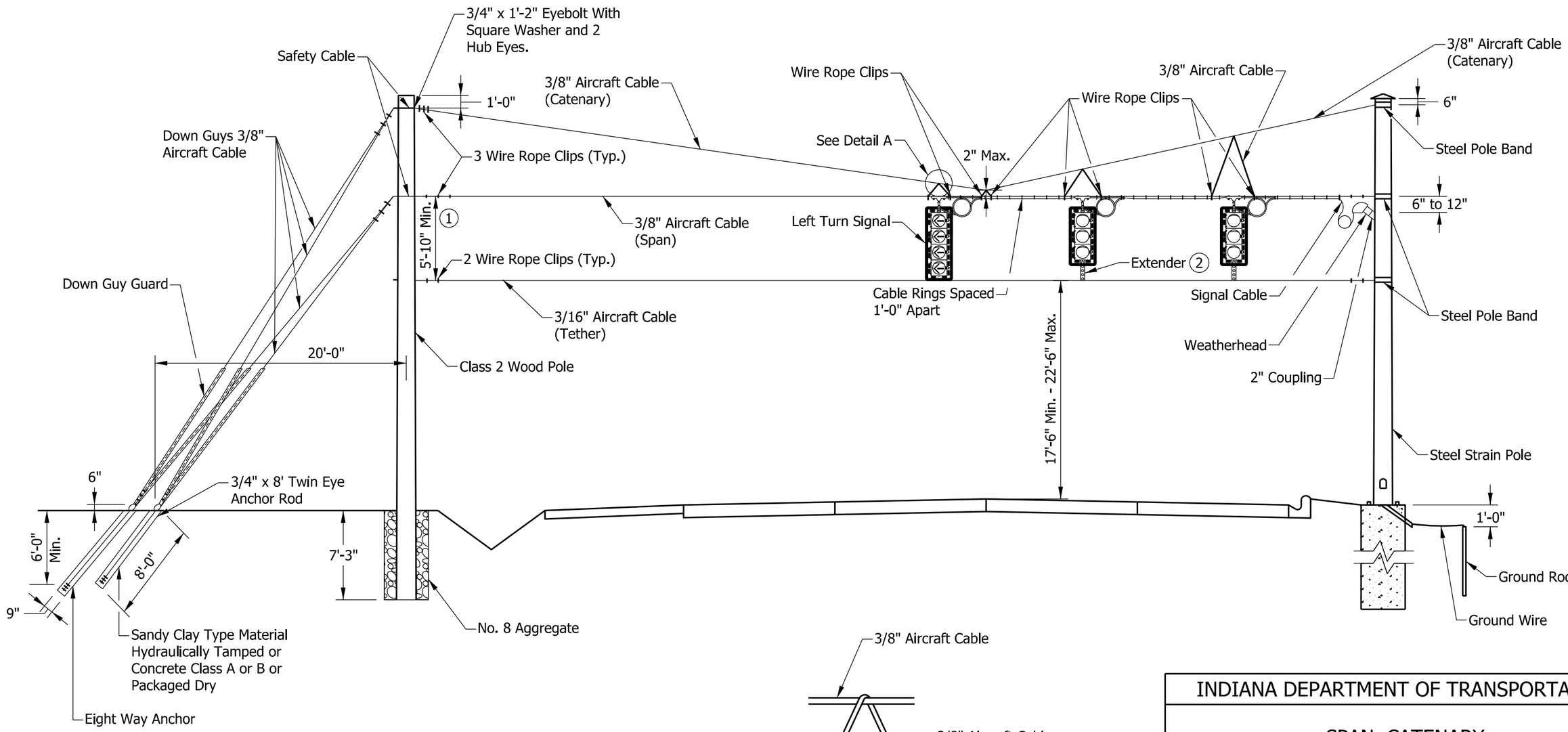

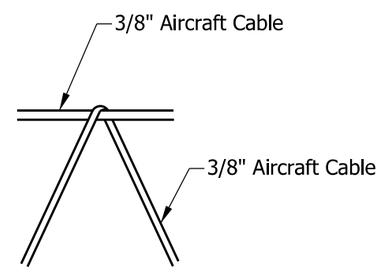

DETAIL A

NOTES:

① With a 3-section left turn signal, the minimum distance shall be 4'-10".
② Where extenders are installed, a 2 in. minimum space shall be provided between the signal backplate and the tether. Extenders are not required where all signal heads are of uniform height and the tether does not interfere with the signal backplate. In such cases, the signal heads shall be connected directly to the tether.

INDIANA DEPARTMENT OF TRANSPORTATION

SPAN, CATENARY & TETHER DETAIL

SEPTEMBER 2015

STANDARD DRAWING NO. E 805-SGSC-04

ALFREDO B. HANZA REGISTERED No. 60020657 STATE OF INDIANA PROFESSIONAL ENGINEER

/s/ Alfredo B. Hanza 03/02/15
DESIGN STANDARDS ENGINEER DATE

/s/ Mark A. Miller 03/02/15
CHIEF ENGINEER DATE