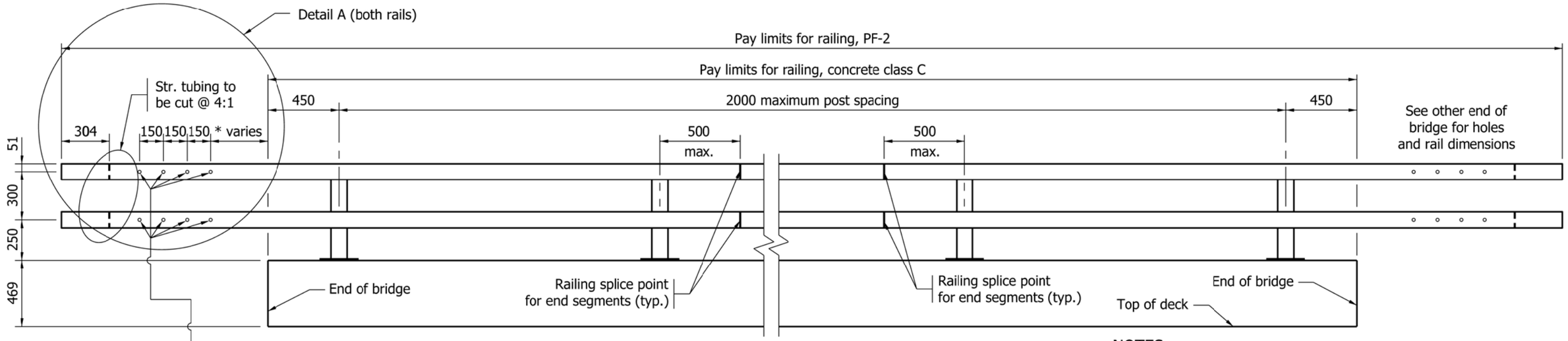

8 - 19 ø x 320 long round head bolts in 22 ø holes. (4 ea. rail) Holes are to be slotted as required for expansion.

*NOTE: Field measure distance to holes on concrete transition.

ELEVATION

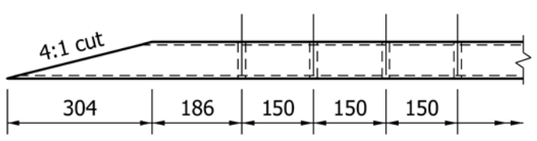

DETAIL A
(Plan view of both rails)

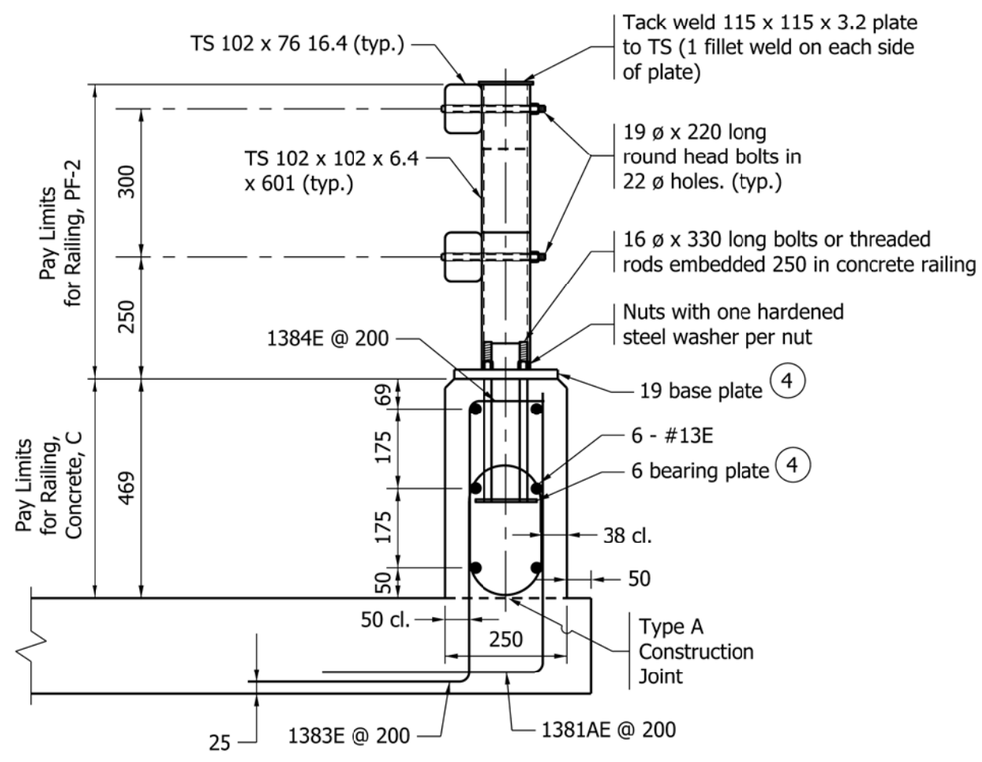

TYPICAL SECTION

NOTES:

1. All chamfered edges shall be 25.
2. Intermediate railing splices shall be placed every 6 m with center of connection at span quarter points.
3. See Standard Drawing 706-BRPP-05 for railing tube details and Inner sleeve details.
4. See Standard Drawing 706-BRPP-06 for base plate detail, bearing plate detail, and reinforcing steel bar bends.
5. See Standard Drawings 706-TTBP-03, and 706-TTBP-04 for Concrete Bridge Railing Transition, TPF-2.
6. See Standard Drawing 703-BRST-01 for standard 180° bar bending details.
7. All reinforcing bars designated "E" shall be epoxy coated.

All Dimensions are in mm unless otherwise specified.

INDIANA DEPARTMENT OF TRANSPORTATION

RAILING, PF-2

SEPTEMBER 2011

STANDARD DRAWING NO. 706-BRPP-02

RICHARD L. VanCLEAVE REGISTERED No. 9750 STATE OF INDIANA PROFESSIONAL ENGINEER

DESIGN STANDARDS ENGINEER

/s/ Richard L. VanCleave 09/01/11
DESIGN STANDARDS ENGINEER DATE

/s/ Mark A. Miller 09/01/11
CHIEF HIGHWAY ENGINEER DATE