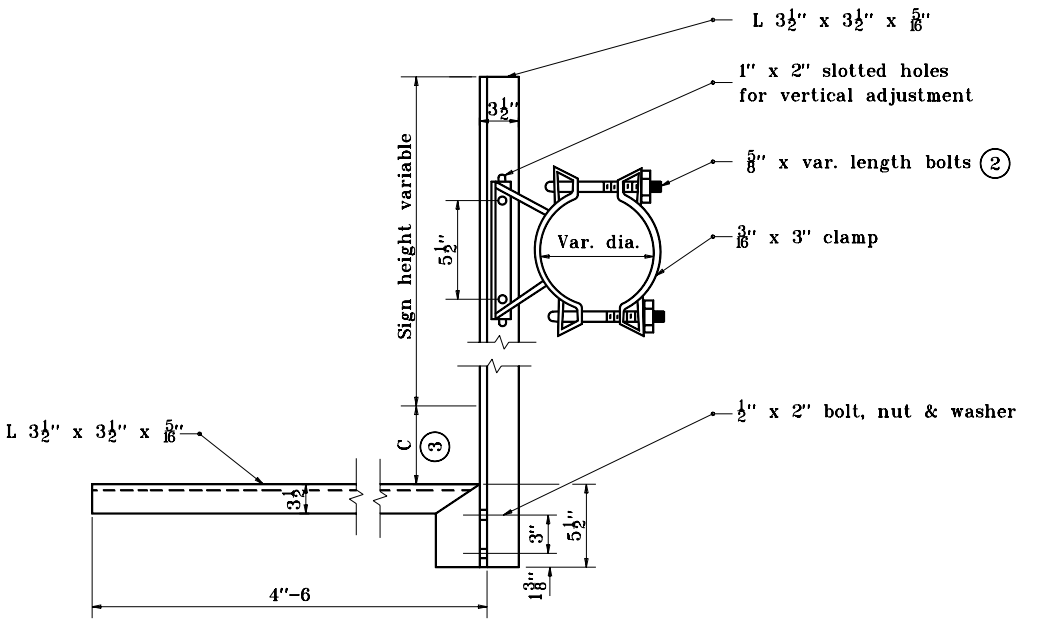

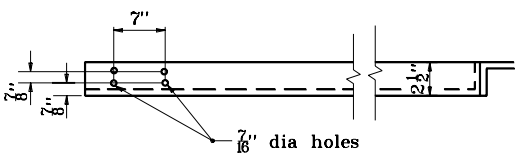

GENERAL NOTES

1. Alternate right and left hand sign brackets required. (See typical plan)

(2) See Standard Drawing E 802-SNIL-07 for Conduit-Lighting Detail.

(3) Dimension governed by type of lighting fixture used. The contractor shall advise the fabricator of this dimension.

SIGN BRACKET WITH EXTENSION LIGHTING SUPPORT
(FOR SINGLE ARM OR BEAM)

INDIANA DEPARTMENT OF TRANSPORTATION

SIGN BRACKET WITH EXTENSION LIGHTING SUPPORT

SEPTEMBER 2001

STANDARD DRAWING NO. **E 802-SNIL-06**

ANTHONY L. UREMOVICH REGISTERED No. 18095 STATE OF INDIANA PROFESSIONAL ENGINEER

DESIGN STANDARDS ENGINEER

/s/ Anthony L. Uremovich 9-04-01
DESIGN STANDARDS ENGINEER DATE

/s/ Firooz Zandi 9-04-01
CHIEF HIGHWAY ENGINEER DATE