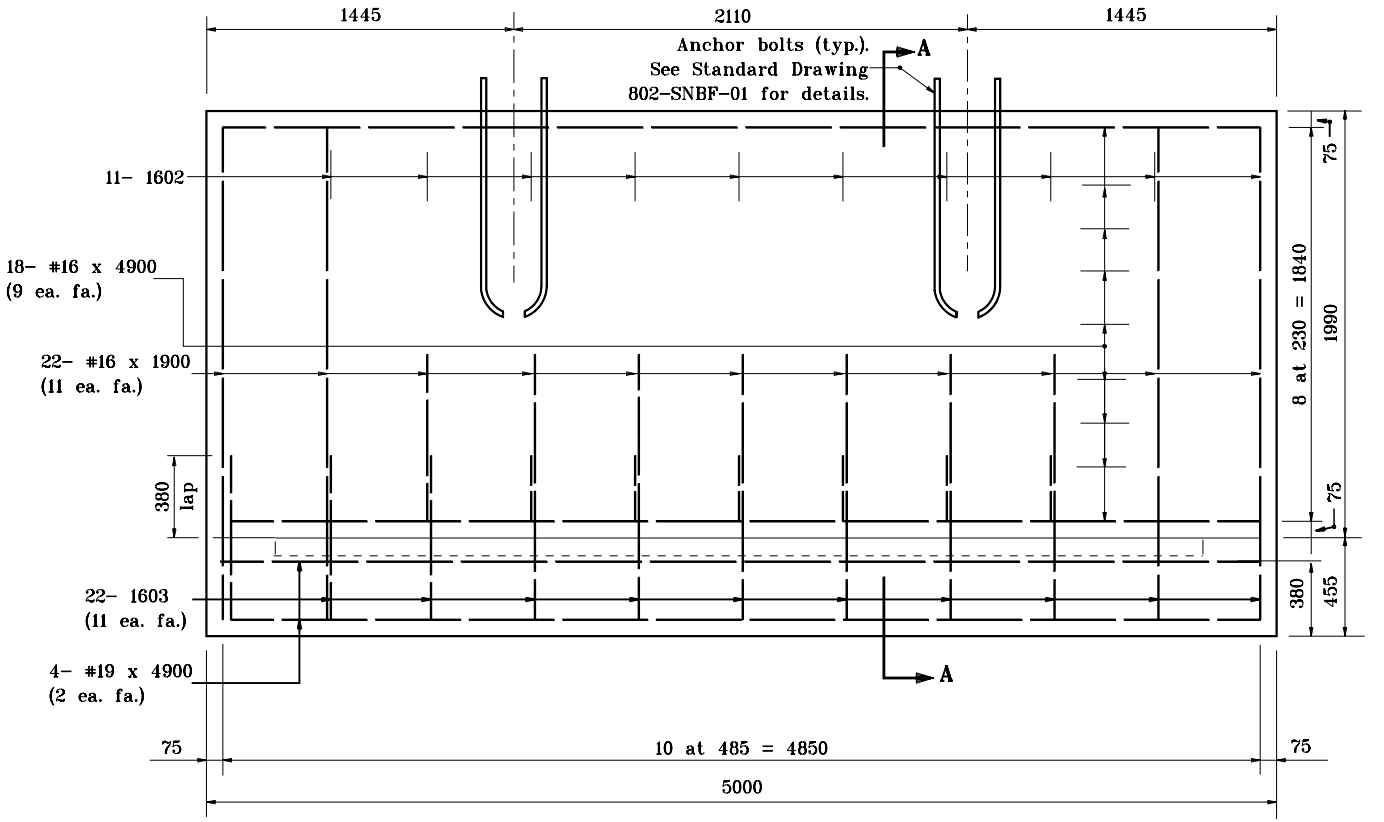

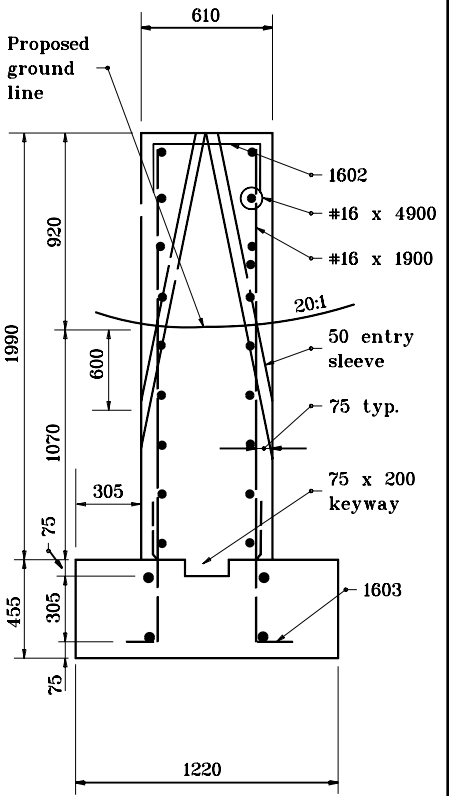

SECTION A-A

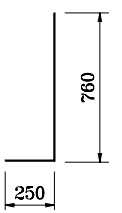

1603 x 1020

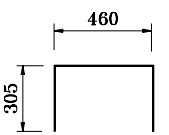

1602 x 1080

MEDIAN INSTALLATION

All dimensions are in mm unless otherwise specified.

INDIANA DEPARTMENT OF TRANSPORTATION

BOX TRUSS SIGN SUPPORT FOUNDATION DETAILS

SEPTEMBER 2001

STANDARD DRAWING NO. **802-SNBF-02**

ANTHONY L. UREMOVICH REGISTERED No. 18095 STATE OF INDIANA PROFESSIONAL ENGINEER

DESIGN STANDARDS ENGINEER

/s/ Anthony L. Uremovich 9-04-01
DESIGN STANDARDS ENGINEER DATE

/s/ Firooz Zandi 9-04-01
CHIEF HIGHWAY ENGINEER DATE