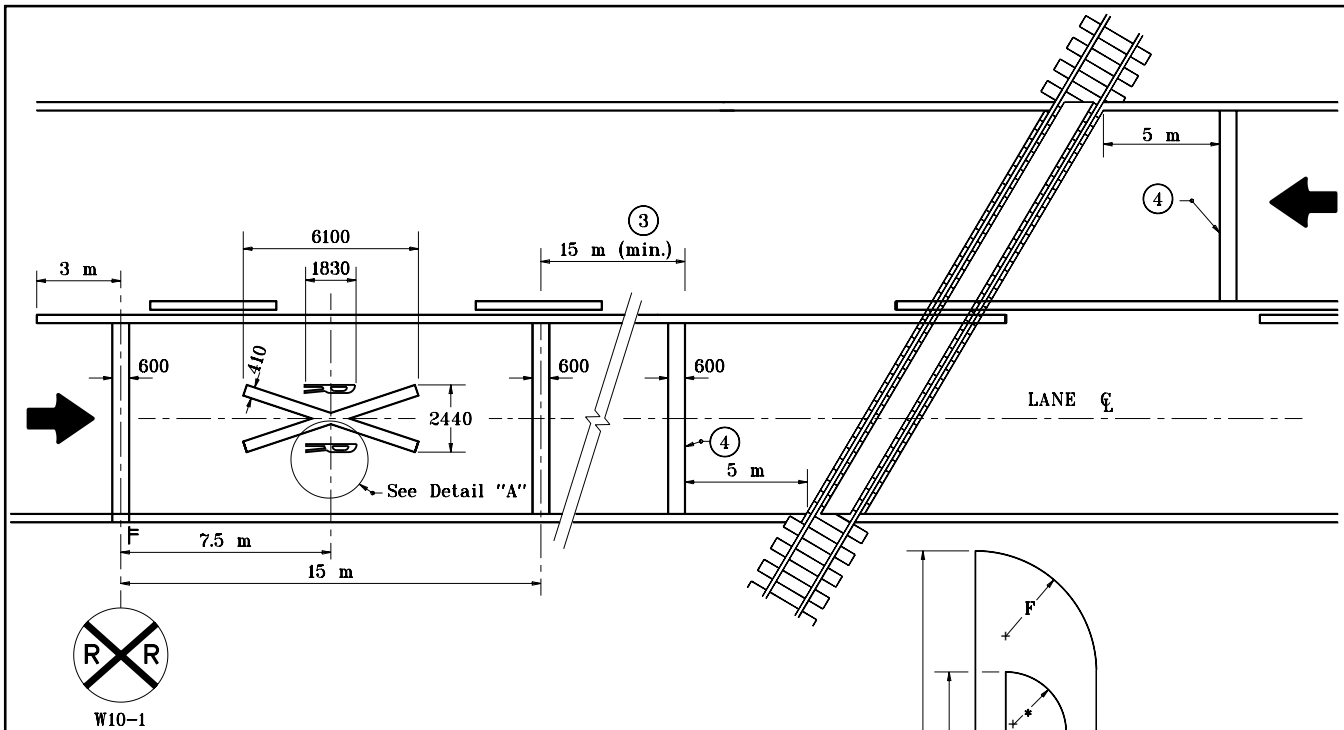

GENERAL NOTES

1. For 2-way left-turn lanes, the center lane shall be discontinued across the railroad crossing and marked as a flush median or as a 1-way left-turn lane.

2. For a multi-lane highway, the transverse lines shall be extended across all approach lanes, and the individual railroad crossing symbols provided in each lane.

(3) Stopping sight distance in rural areas; variable in urban areas, but not less than 15 m. See Stopping Sight Distance Table.

(4) Stop line is approximately 2.5 m from gate (if present).

STOPPING SIGHT DISTANCE (3)

Speed, km/h	(mph)	Distance
50	(30)	60 m
60	(35)	100 m
60	(40)	125 m
70	(45)	150 m
80	(50)	175 m
90	(55)	200 m
100	(60)	200 m

A = 70
B = 290
C = 590
D = 660
E = 1830
F = 290
* = 150

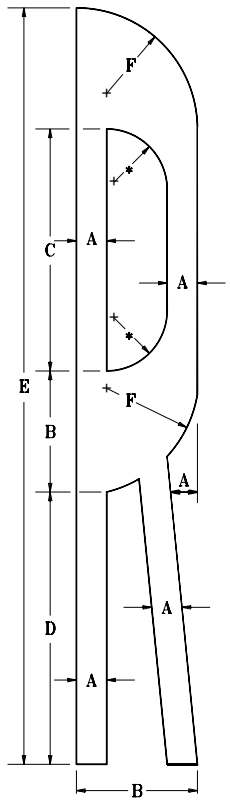

DETAIL "A"

All dimensions are in mm unless otherwise specified.

INDIANA DEPARTMENT OF TRANSPORTATION

PAVEMENT MARKING FOR RAILROAD CROSSINGS

JANUARY 2000

STANDARD DRAWING NO. **808-MKPM-07**

ANTHONY L. UREMOVICH REGISTERED No. 18095 STATE OF INDIANA PROFESSIONAL ENGINEER

DESIGN STANDARDS ENGINEER

/s/ Anthony L. Uremovich — DESIGN STANDARDS ENGINEER — 1-03-00 DATE

/s/ Firooz Zandi — CHIEF HIGHWAY ENGINEER — 1-03-00 DATE