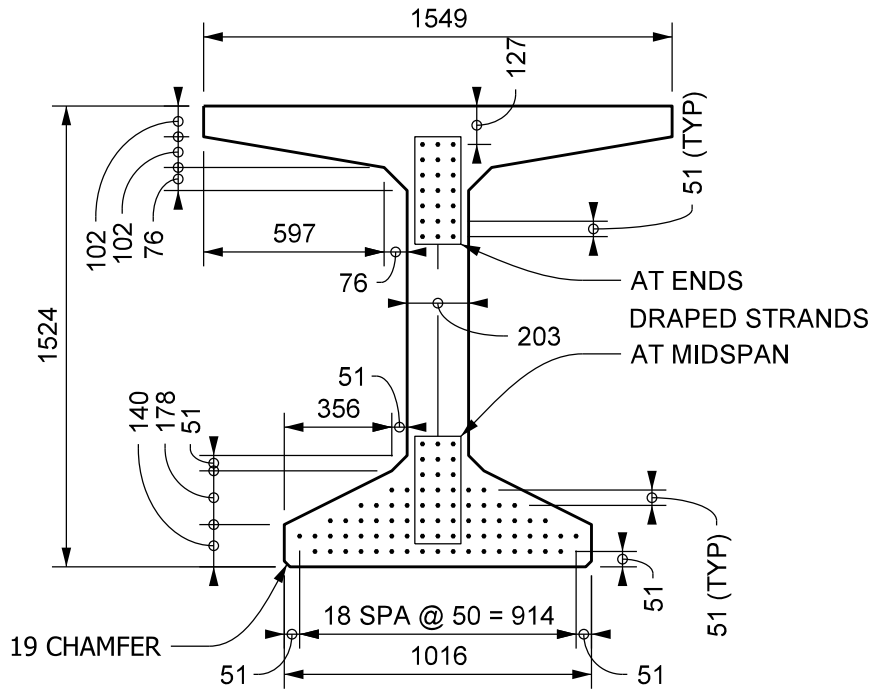

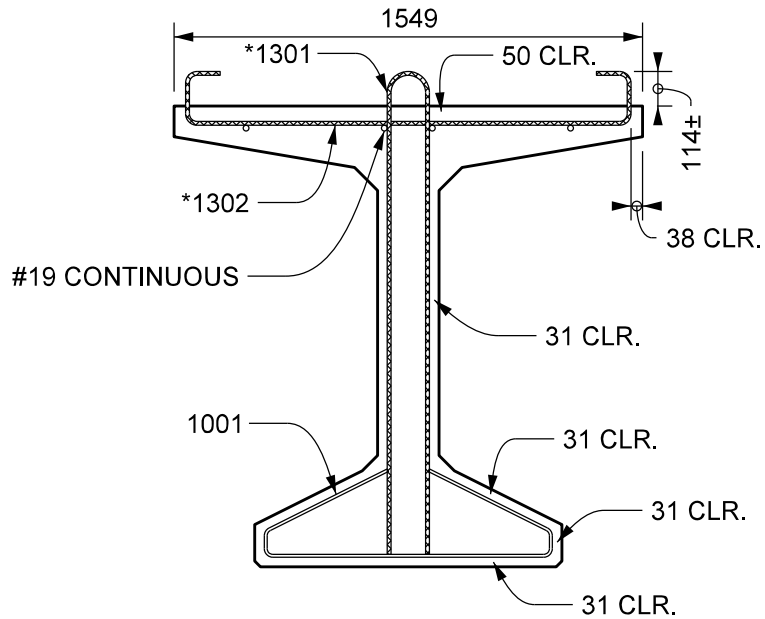

NOTES:

1. ▩ *DENOTES EPOXY-COATED BARS

2. LOCATE HOLDDOWNS 1524 EACH SIDE OF CENTER LINE OF BEAM

3. ALL DIMENSIONS ARE IN MILLIMETERS.

BULB-TEE BEAM TYPE BT 1524 x 1550 SECTIONS SHOWING PRESTRESSING AND MILD REINFORCING STEEL

Figure 63-14W(1)