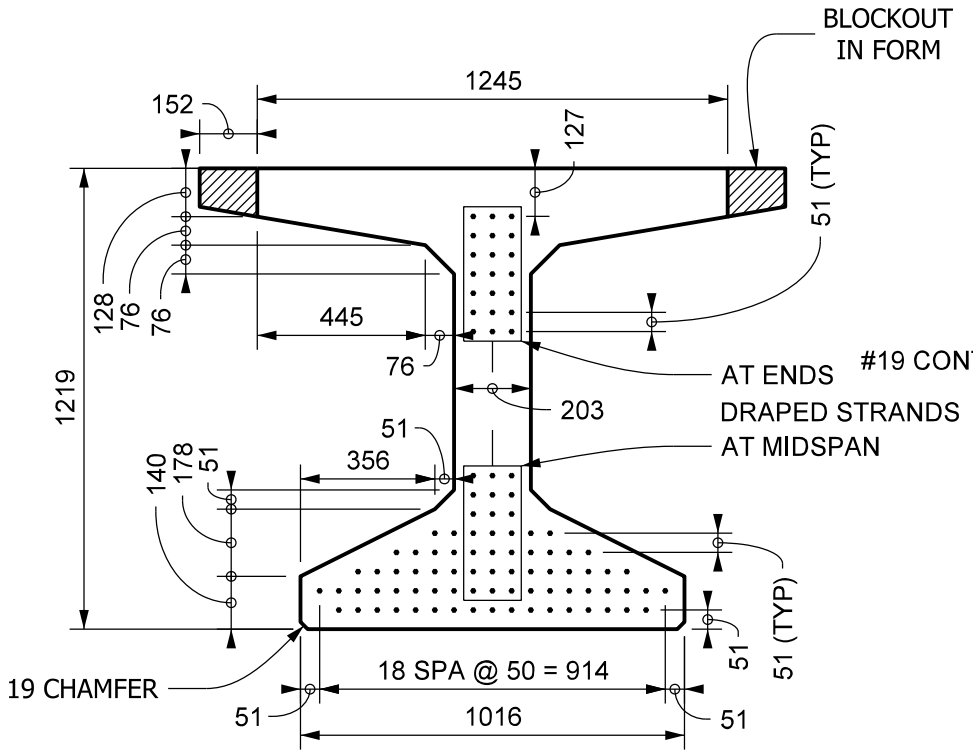

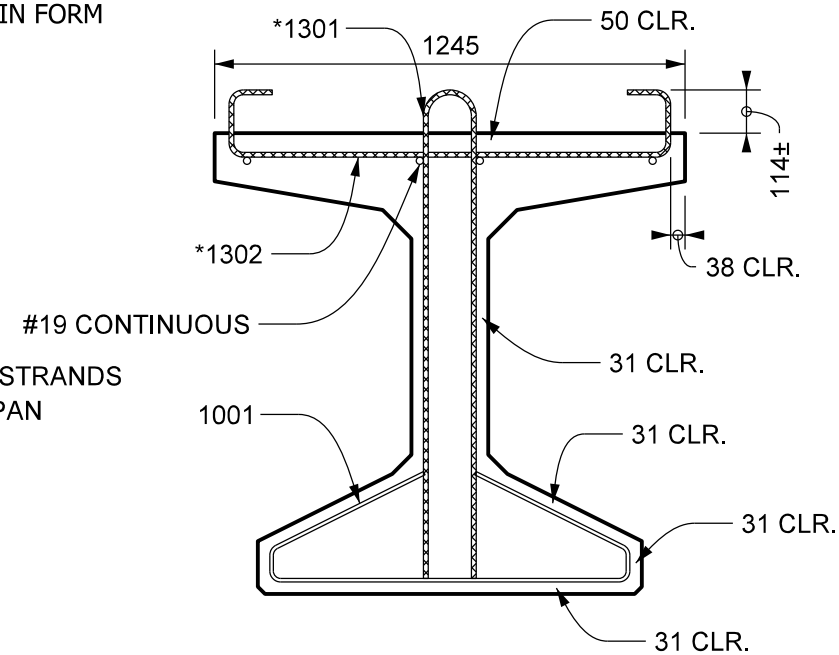

NOTES:

1. ▨ *DENOTES EPOXY-COATED BARS
2. LOCATE HOLDDOWNS 1524 EACH SIDE OF CENTER LINE OF BEAM
3. ALL DIMENSIONS ARE IN MILLIMETERS.

BULB-TEE BEAM TYPE BT 1220 x 1245 SECTIONS SHOWING PRESTRESSING AND MILD REINFORCING STEEL

Figure 63-14 I(1)