CONTRACT NO. B-19705

B-19705

BRIDGES OVER 20' SPAN					
FEDERAL REGION NO.	STATE	PROJECT NO.	FISCAL YEAR	SHEET NO.	TOTAL SHEETS
5	IND.	MANHI-465-4 (276)	1992	1	59

INDIANA DEPARTMENT OF TRANSPORTATION

BRIDGE PLANS

FOR SPANS OVER 20 FEET ON INTERSTATE ROAD NO. 465

PROJECT NO. MANHI-465-4 (276)

( ) P.E.
( ) R/W
(276) CONST

APPROACH PAVEMENT REPLACEMENT AND BRIDGE WIDENING BY REMOVAL AND REPLACEMENT OF SUPERSTRUCTURE, EXISTING END BENTS AND INTERIOR BENT CAPS OF STRUCTURE I-465-154-4649 DR(B) ALL IN SECTION 24, T15N, R2E, WAYNE TOWNSHIP, MARION COUNTY, INDIANA

BRIDGE LENGTH: 0.028 Mi.
ROADWAY LENGTH: 0.170 Mi.
TOTAL LENGTH: 0.198 Mi.
MAX. GRADE: 4.00 %

INDEX

PROJECT	STRUCTURE	TYPE	SPAN	OVER	STATION
MANHI-465-4(276)	I-465-154-4649DR(B)	CONTINUOUS COMPOSITE STEEL BEAM	1@43'-0; 1@51'-6¾; 1@39'-0	BRADBURY E.B. OVER I-465	

SHEET NO	SHEET DESIGNATION	SUBJECT	F.H.W.A. APPROVAL
1	ONE SHEET	TITLE SHEET	
2,3	TWO SHEETS	TYPICAL CROSS SECTION	
4	ONE SHEET	ROAD CONSTRUCTION DETAILS	
5	ONE SHEET	RAMP "S.W.L" GRADES & TRANSITIONS	
6	ONE SHEET	MAINTENANCE OF TRAFFIC	
7	ONE SHEET	DETOUR DETAILS	
8	S1	LAYOUT	
9	S2	TIE-UP DIMENSIONS	
10	S3	GENERAL PLAN	
11	S4	R.C. APPROACH SLAB	
12	S5	R.C. APPROACH SLAB DETAILS	
13	S6	CONCRETE BARRIER RAIL TRANSITION	
14	S7	SPECIAL CONCRETE BARRIER RAIL TRANSITION	
15	S8	BENT NO. 1	
16	S9	BENT NO. 2	
17	S10	BENT NO. 3	
18	S11	BENT NO. 4	
19	S12	END BENT DETAILS	
20	S13	STRUCTURAL STEEL DETAILS	
21	S14	STRUCTURAL STEEL DETAILS	
22	S15	BEARING DETAILS	
23	S16	SUPERSTRUCTURE	
24	S17	SUPERSTRUCTURE	
25	S18	SUPERSTRUCTURE DETAILS	
26	S19	SCREED DATA	
27	ONE SHEET	BRIDGE SUMMARY SHEET	
28-32	FIVE SHEETS	CROSS SECTIONS	

INDEX CONTINUED STANDARD DRAWINGS

* F.H.W.A. APPROVAL PENDING

SHEET NO.	SHEET DESIGNATION	SUBJECT	F.H.W.A. APPROVAL	ADOPTED "A" REVISION "R"
	BRIDGE STD. BR1	ALUMINUM BRIDGE RAILING		
	BRIDGE STD. BR2	ALUMINUM BRIDGE RAILING DETAILS		
	BRIDGE STD. BR3	STEEL BRIDGE RAILING		
	BRIDGE STD. BR4	STEEL BRIDGE RAILING DETAILS		
	BRIDGE STD. BR5	RAILING CONNECTION DETAILS		
	BRIDGE STD.			
33	BRIDGE STD. C1	MISCELLANEOUS DETAILS	11-22-91	R 10-1-91
	BRIDGE STD. C2	MISCELLANEOUS DETAILS		
34	BRIDGE STD. C3	MISCELLANEOUS DETAILS	1-26-88	R 11-2-87
	BRIDGE STD. C4	MISCELLANEOUS DETAILS		
35	BRIDGE STD. D	CASTING DETAILS ROADWAY DRAINS	1-11-89	R 9-1-88
	BRIDGE STD. D1	ADJUSTING FRAME DETAILS FOR ROADWAY DRAINS		
	BRIDGE STD.			
	BRIDGE STD. PB	PRESTRESSED CONCRETE TYPE I-BEAMS		
	BRIDGE STD. PB	PRESTRESSED CONCRETE TYPE I-BEAMS		
	BRIDGE STD. PB6	PRESTRESSED BOX BEAMS		
	BRIDGE STD. PB	PRESTRESSED COMPOSITE BOX BEAMS WIDE		
	BRIDGE STD. PB	PRESTRESSED COMPOSITE BOX BEAMS WIDE		
	BRIDGE STD. PB10	TOLERANCES FOR FABRICATION OF PRESTRESSED BEAMS		
	BRIDGE STD. PB11	ELASTOMERIC BEARING PAD DETAILS		
	BRIDGE STD.			
	BRIDGE STD.			
	BRIDGE STD. R2A	BRIDGE LIGHTING DETAILS		
	BRIDGE STD. R2B	BRIDGE LIGHTING DETAILS		
36	BRIDGE STD. S1	MISCELLANEOUS DETAILS		
	BRIDGE STD. SH1	STEEL SHOE DETAILS		
	BRIDGE STD. T SHEET A	STANDARD TEMPORARY BRIDGE		
	BRIDGE STD. T SHEET B	STANDARD TEMPORARY BRIDGE		
	BRIDGE STD.			
	BRIDGE STD.			
	BRIDGE STD.			
	BRIDGE STD.			
	BRIDGE STD.			
37	ROAD STD. SHEET A	STANDARD PAVEMENT JOINTS	*	R 3-1-90
	ROAD STD. SHEET B	STANDARD PAVEMENT JOINTS		
	ROAD STD. SHEET	MISCELLANEOUS STANDARDS		
38	ROAD STD. SHEET MA	MISCELLANEOUS STANDARDS	*	R 3-1-90
	ROAD STD. SHEET	MISCELLANEOUS STANDARDS		
39	ROAD STD. SHEET MB4	MISCELLANEOUS STANDARDS	6-14-74	R 1-2-74
	ROAD STD. SHEET	MISCELLANEOUS STANDARDS		
40	ROAD STD. SHEET MI-1	MISCELLANEOUS STANDARDS	6-20-91	A Apr. 1991
	ROAD STD. SHEET	MISCELLANEOUS STANDARDS		
41	ROAD STD. SHEET MN	MISCELLANEOUS STANDARDS	9-24-85	R 6-3-85
	ROAD STD. SHEET	MISCELLANEOUS STANDARDS		
42	ROAD STD. SHEET MP	MISCELLANEOUS STANDARDS	9-24-85	R 6-3-85
	ROAD STD. SHEET	MISCELLANEOUS STANDARDS		
43	ROAD STD. SHEET MT-1	MISCELLANEOUS STANDARDS	*	R 5-1-89
	ROAD STD. SHEET	MISCELLANEOUS STANDARDS		
	ROAD STD. SHEET	MISCELLANEOUS STANDARDS		
	ROAD STD. SHEET	MISCELLANEOUS STANDARDS		
	ROAD STD. SHEET	MISCELLANEOUS STANDARDS		
	ROAD STD. SHEET	MISCELLANEOUS STANDARDS		
	ROAD STD. SHEET	MISCELLANEOUS STANDARDS		
	ROAD STD. SHEET	MISCELLANEOUS STANDARDS		
	ROAD STD. SHEET	MISCELLANEOUS STANDARDS		
	ROAD STD. SHEET	MISCELLANEOUS STANDARDS		
	ROAD STD. SHEET	MISCELLANEOUS STANDARDS		
44	ROAD STD. SHEET G-1	GUARD RAIL, W-BEAM, COMPONENTS	*	A Dec. 1991
45	ROAD STD. SHEET G-2	GUARD RAIL, THRIE-BEAM, COMPONENTS	*	A Dec. 1991
46	ROAD STD. SHEET G-3	GUARD RAIL, W-BEAM, ASSEMBLIES	*	A Dec. 1991
47	ROAD STD. SHEET T-1	GUARD RAIL TRANSITION TYPE GB	*	A Dec. 1991
48	ROAD STD. SHEET T-2	GUARD RAIL TRANSITION TYPE GP	*	A Dec. 1991
49	ROAD STD. SHEET T-3	GUARD RAIL TRANSITION TYPE VH	*	A Dec. 1991
50	ROAD STD. SHEET T-4	GUARD RAIL PIER CONNECTION DETAILS	*	A Dec. 1991
51	ROAD STD. SHEET E-2	END TREATMENT TYPE OS	*	A Dec. 1991
	ROAD STD. SHEET GR9			
	ROAD STD. SHEET GR10	GUARD RAIL BURIED ENDS		
	ROAD STD. SHEET GR10A	GUARD RAIL BREAKAWAY CABLE TERM.		
	ROAD STD.			
52	ROAD STD. SHEET CB2	TEMPORARY CONCRETE BARRIER	1-11-89	R 9-1-88
53	ROAD STD. SHEET 1 DETOURS	STANDARD DETOUR SIGNS	*	A Sep. 1988
	ROAD STD. SHEET 1A DETOURS	STANDARD DETOUR SIGNS		
	ROAD STD. SHEET 1B DETOURS	STANDARD DETOUR SIGNS		
54	ROAD STD. SHEET 2 DETOURS	STANDARD DETOUR SIGNS	6-20-91	R 4-1-91
55	ROAD STD. SHEET 2A DETOURS	STANDARD DETOUR SIGNS	*	A Sep. 1988
56	ROAD STD. SHEET 3 DETOURS	STANDARD DETOUR SIGNS	*	R 9-1-88
57	ROAD STD. SHEET 3A DETOURS	STANDARD DETOUR SIGNS	*	R 9-1-88
58	ROAD STD. SHEET 4 DETOURS	STANDARD DETOUR SIGNS	1-11-89	R 9-1-88
	ROAD STD. SHEET 5 DETOURS	STANDARD DETOUR SIGNS		
59	ROAD STD. SHEET 5A DETOURS	STANDARD DETOUR SIGNS	*	R 9-1-88

TRAFFIC DATA		
A.D.T. (1992)	I-465-154-4649DR(B)	16,200 V.P.D.
A.D.T. (19 PROJECTED)		V.P.D.
D.H.V. (19 PROJECTED)		V.P.D.
TRUCKS		D.H.V. % A.D.T. %
DESIGN SPEED		35 M.P.H.
ACCESS CONTROL		LIMITED

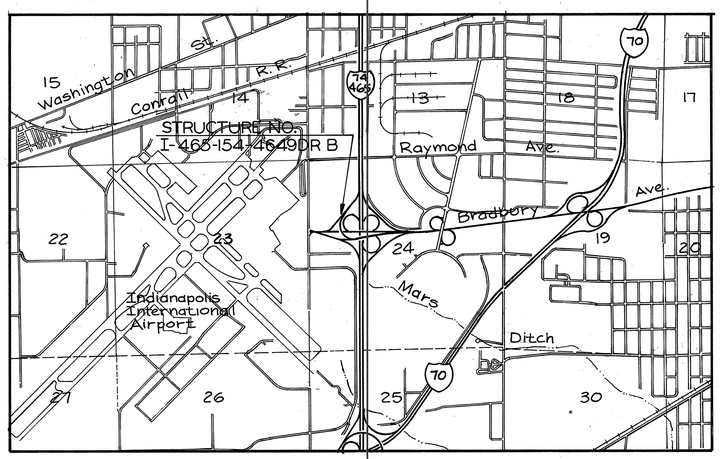

SCALE: 1" = 2000'

PLANS SUBMITTED FOR APPROVAL
BOYD E. PHELPS INC.
INDIANAPOLIS & MICHIGAN CITY, INDIANA

L.D. TAYLOR, JR. No. 6899

BY L. D. Taylor Jr.
DATE July 7, 1992

NOTE:
WHENEVER IR-465-4(276)
APPEARS ON THESE PLANS OR CONTRACT DOCUMENTS
IT SHALL BE INTERPRETED AS MANHI-465-4(276)

RECOMMENDED FOR APPROVAL 7-28-92
James C. Karr
BRIDGE ENGINEER, I.D.O.T.

JAMES C. KARR No. 16000

APPROVED 7-28-92
CHIEF, DIVISION OF DESIGN, I.D.O.T.

RECOMMENDED FOR APPROVAL 7-28-92
DESIGN CONSULTANT SERVICES MANAGER, I.D.O.T.

DAVID M. FLUCKERMAN No. 20674

REVISIONS	
DATE	SHEET NO.

REVISIONS	
DATE	SHEET NO.

FEDERAL HIGHWAY ADMINISTRATION
DEPARTMENT OF TRANSPORTATION
APPROVED:
DIVISION ADMINISTRATOR
DATE

BRIDGE FILE: I-465-154-4649 DR(B)

INDIANA DEPARTMENT OF HIGHWAYS STANDARD SPECIFICATIONS DATED 19 TO BE USED WITH THESE PLANS.

SF-22427

DES#8717215

TP100

FEDERAL ROAD DIVISION NO.	STATE	PROJ. NO.	FISCAL YEAR	SHEET NO.	TOTAL SHEETS
5	IND.	IR-465 -4( )	199	2	59

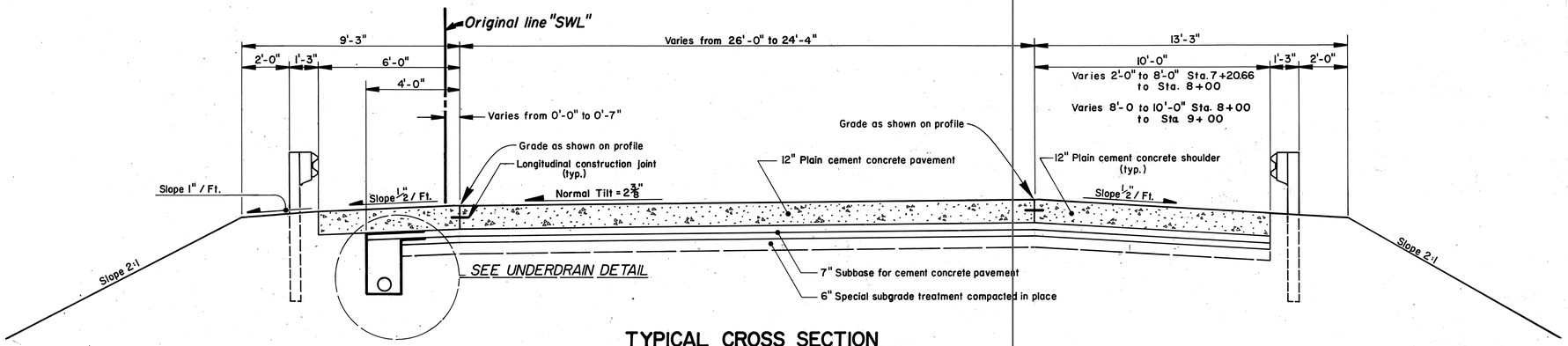

TYPICAL CROSS SECTION

Sta. 7+20.66 line "SWL" to sta. 7+50.66 line "SWL"

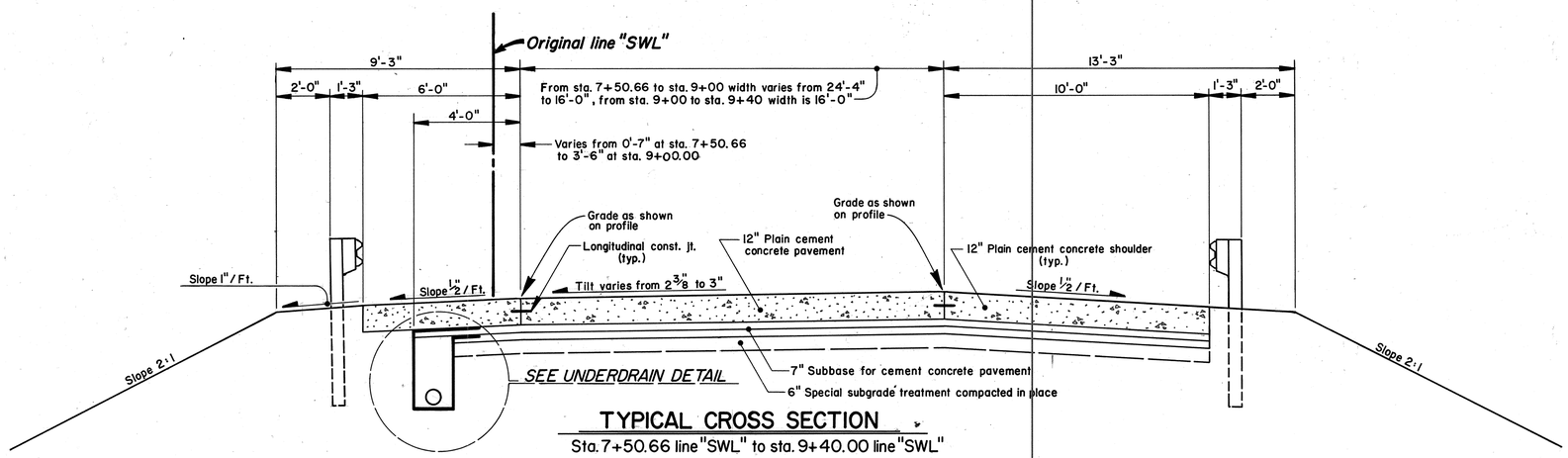

TYPICAL CROSS SECTION

Sta. 7+50.66 line "SWL" to sta. 9+40.00 line "SWL"

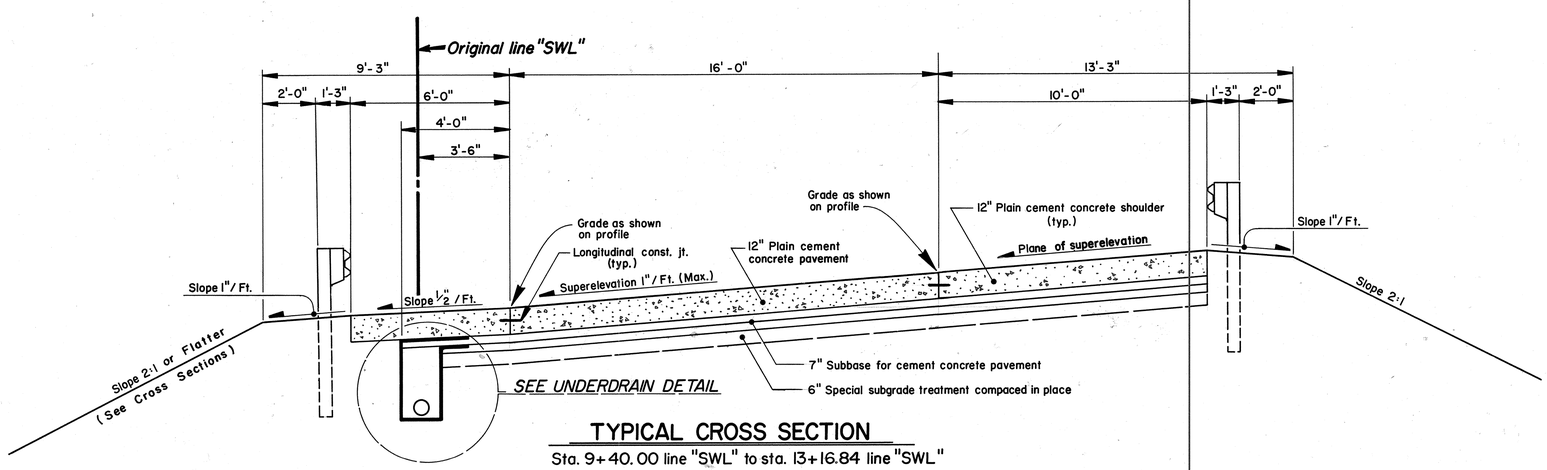

TYPICAL CROSS SECTION

Sta. 9+40.00 line "SWL" to sta. 13+16.84 line "SWL"

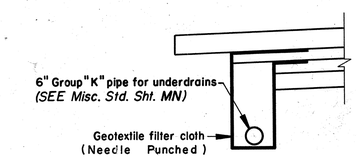

UNDERDRAIN DETAIL

N.T.S.

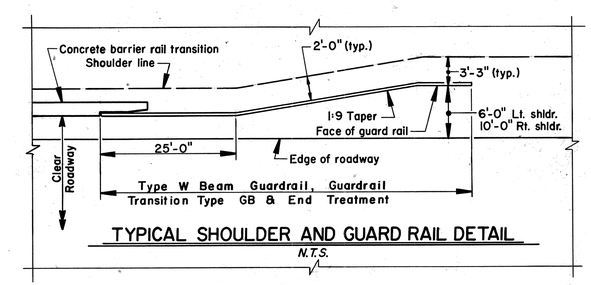

TYPICAL SHOULDER AND GUARD RAIL DETAIL

N.T.S.

I-465 S.B. TO E.B. AIRPORT EXPRESSWAY VIA S.W. LOOP

INDIANA DEPARTMENT OF TRANSPORTATION

TYPICAL CROSS SECTIONS

SCALE:- 3/8" = 1'-0"

RECOMMENDED FOR APPROVAL July 7, 1992

L. D. Taylor

L. D. TAYLOR, JR. REGISTERED No. 6899 STATE OF INDIANA PROFESSIONAL ENGINEER

B-19705

SF-22397

PROJECT NO.	LINE	SHEET NO.	TOTAL SHEETS	FILE
IR-465-4( )	"SWL"	2	59	

TP110

FEDERAL ROAD DIVISION NO.	STATE	PROJ. NO.	FISCAL YEAR	SHEET NO.	TOTAL SHEETS
	IND.	IR-465 -4( )	199	3	59

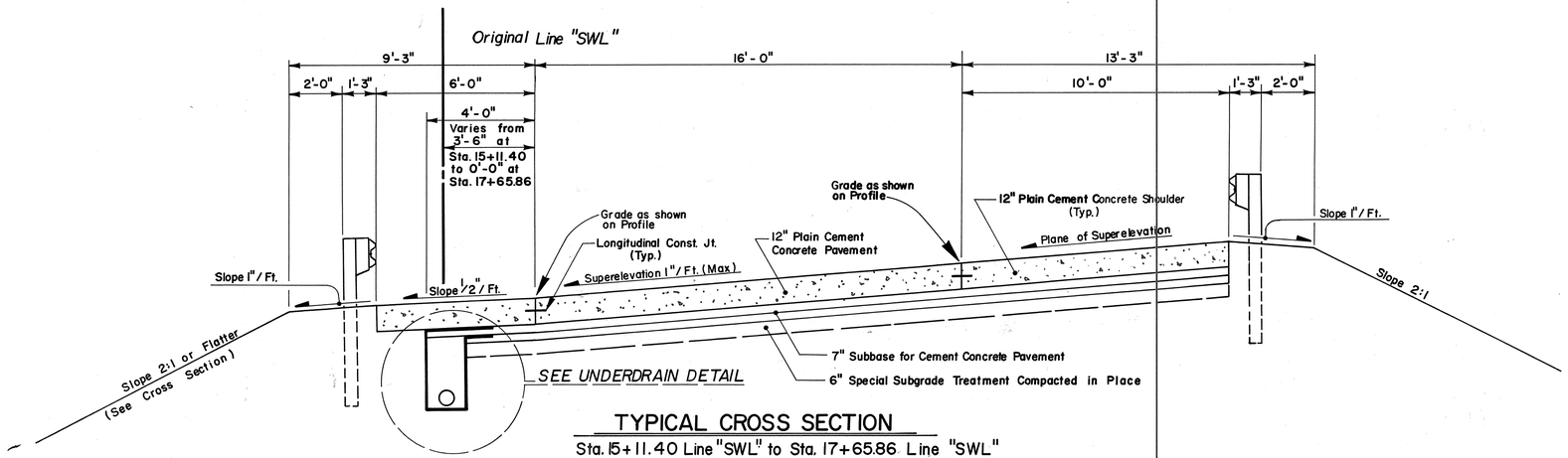

TYPICAL CROSS SECTION

Sta. 15+11.40 Line "SWL" to Sta. 17+65.86 Line "SWL"

I-465 S.B. TO E.B. AIRPORT EXPRESSWAY VIA S.W. LOOP

INDIANA DEPARTMENT OF TRANSPORTATION

TYPICAL CROSS SECTIONS

SCALE:- 3/8" = 1'-0"

RECOMMENDED FOR APPROVAL July 7, 1992

L. D. TAYLOR, JR.
REGISTERED
No. 6899
STATE OF INDIANA
PROFESSIONAL ENGINEER

B-19705

SF-22397

PROJECT NO.	LINE	SHEET NO.	TOTAL SHEETS	FILE
IR-465-4( )	"SWL"	3	59	

TP110

FEDERAL ROAD REGION NO.	STATE	PROJECT NO.	FISCAL YEAR	SHEET NO.	TOTAL SHEETS
5	IND.	IR-465-4( )	199	4	59

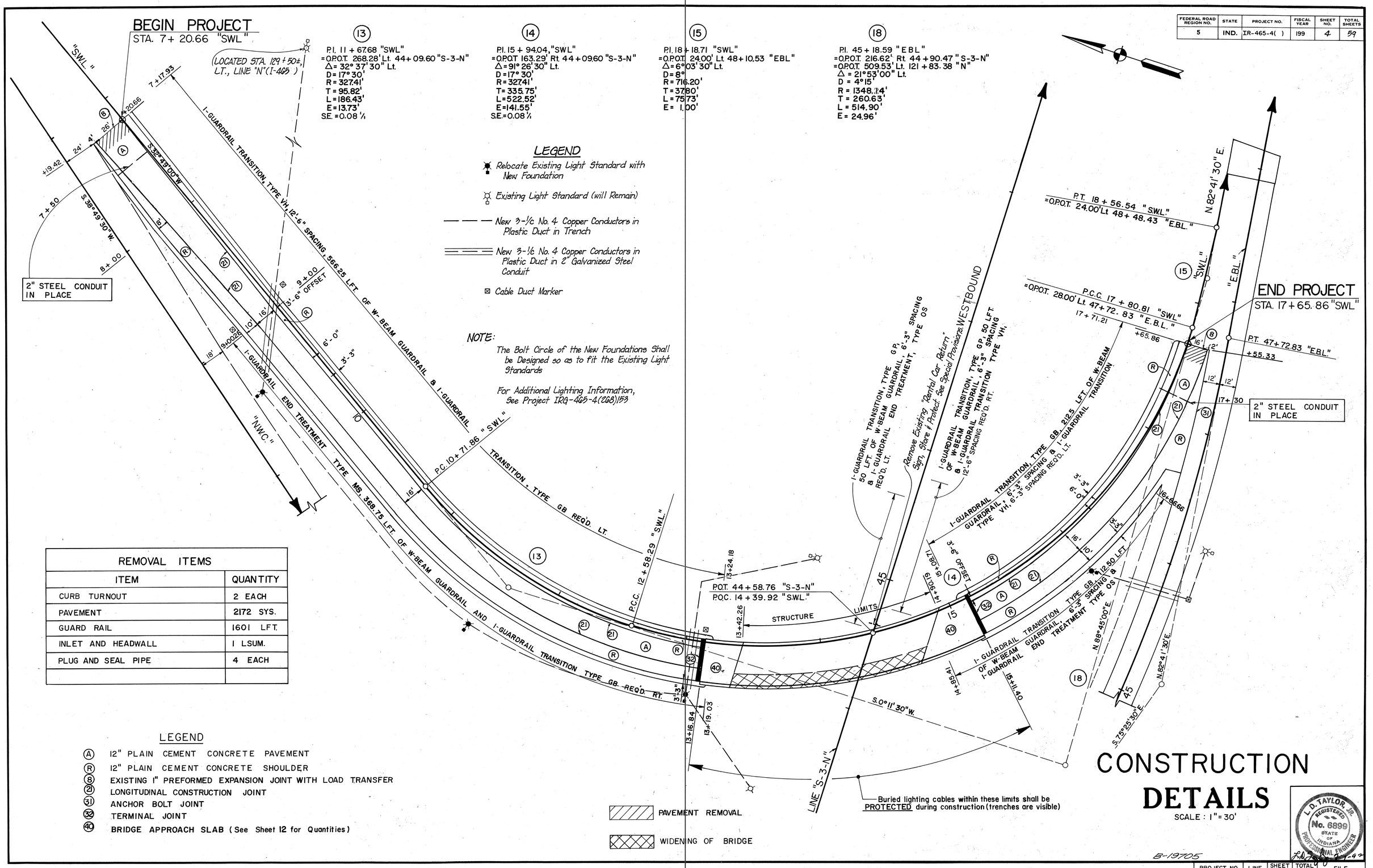

REMOVAL ITEMS	
ITEM	QUANTITY
CURB TURNOUT	2 EACH
PAVEMENT	2172 SYS.
GUARD RAIL	1601 LFT.
INLET AND HEADWALL	1 LSUM.
PLUG AND SEAL PIPE	4 EACH

LEGEND

- (A) 12" PLAIN CEMENT CONCRETE PAVEMENT
- (R) 12" PLAIN CEMENT CONCRETE SHOULDER
- (8) EXISTING 1" PREFORMED EXPANSION JOINT WITH LOAD TRANSFER
- (21) LONGITUDINAL CONSTRUCTION JOINT
- (31) ANCHOR BOLT JOINT
- (32) TERMINAL JOINT
- (40) BRIDGE APPROACH SLAB (See Sheet 12 for Quantities)

CONSTRUCTION DETAILS

SCALE: 1" = 30'

L. D. TAYLOR, JR. REGISTERED No. 6899 STATE OF INDIANA PROFESSIONAL ENGINEER

B-19705

PROJECT NO.	LINE	SHEET NO.	TOTAL SHEETS	FILE
IR-465-4( )	"SWL"	4	59	

1976

TP107

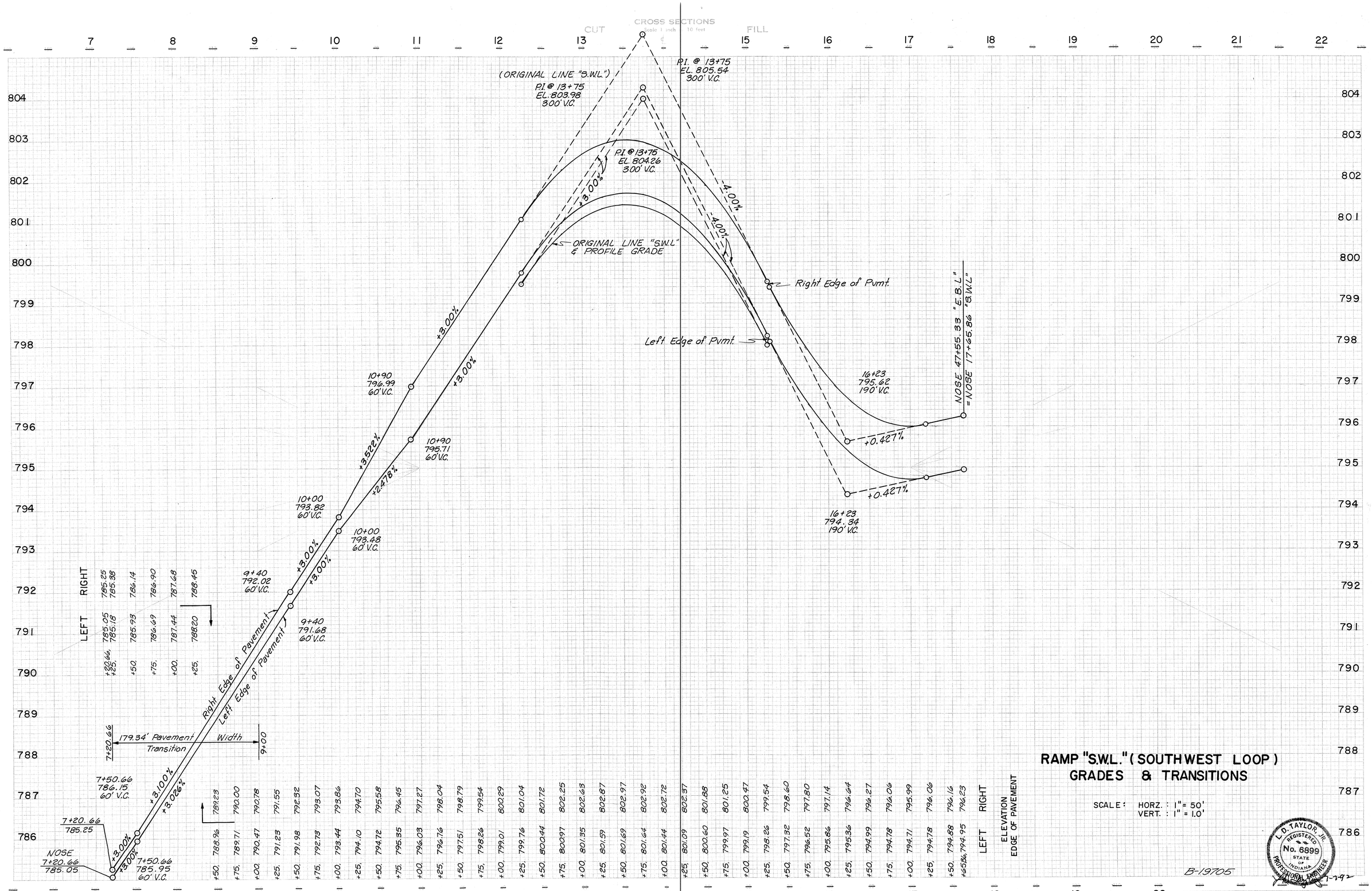

RAMP "S.W.L." (SOUTHWEST LOOP)
GRADES & TRANSITIONS

SCALE: HORZ. : 1" = 50'
VERT. : 1" = 1.0'

B-19705

L. D. TAYLOR, JR.
REGISTERED
No. 6899
STATE OF INDIANA
PROFESSIONAL ENGINEER
7-19-72

LEVEL BOOK NO.				FILE	
FEDERAL ROAD REGION NO.	STATE	PROJECT NO.	FISCAL YEAR	SHEET NO.	TOTAL SHEETS
5	IND.	IR-465-4( ) 199		5	59
			LINE		

PLATE

September, 1973

FEDERAL ROAD REGION NO.	STATE	PROJECT NO.	FISCAL YEAR	SHEET NO.	TOTAL SHEETS
5	IND.	I-465-4(267)	1992	6	59

CONSTRUCTION PROCEDUCE

PHASE I:

1. Install maintenance of traffic devices as shown in the TYPICAL PLAN and PHASE I detail.
2. Remove superstructure, beams and approach slabs.
3. Lengthen interior bent no. 3 and construct end bent no. 4.
4. Construct south approach slab and southern portion of ramp.

PHASE II:

1. Maintain maintenance of traffic devices as shown in the TYPICAL PLAN and install maintenance of traffic devices as shown in the PHASE II detail.
2. Lengthen interior bent no. 2 and construct end bent no. 1.
3. Place beams and superstructure.
4. Construct north approach slab and northern portion of ramp.
5. Remove maintenance of traffic devices.

NOTES:

1. Portions of the existing guardrail shall be removed as required to allow the shoulder end of the concrete barrier transition to be installed behind it.

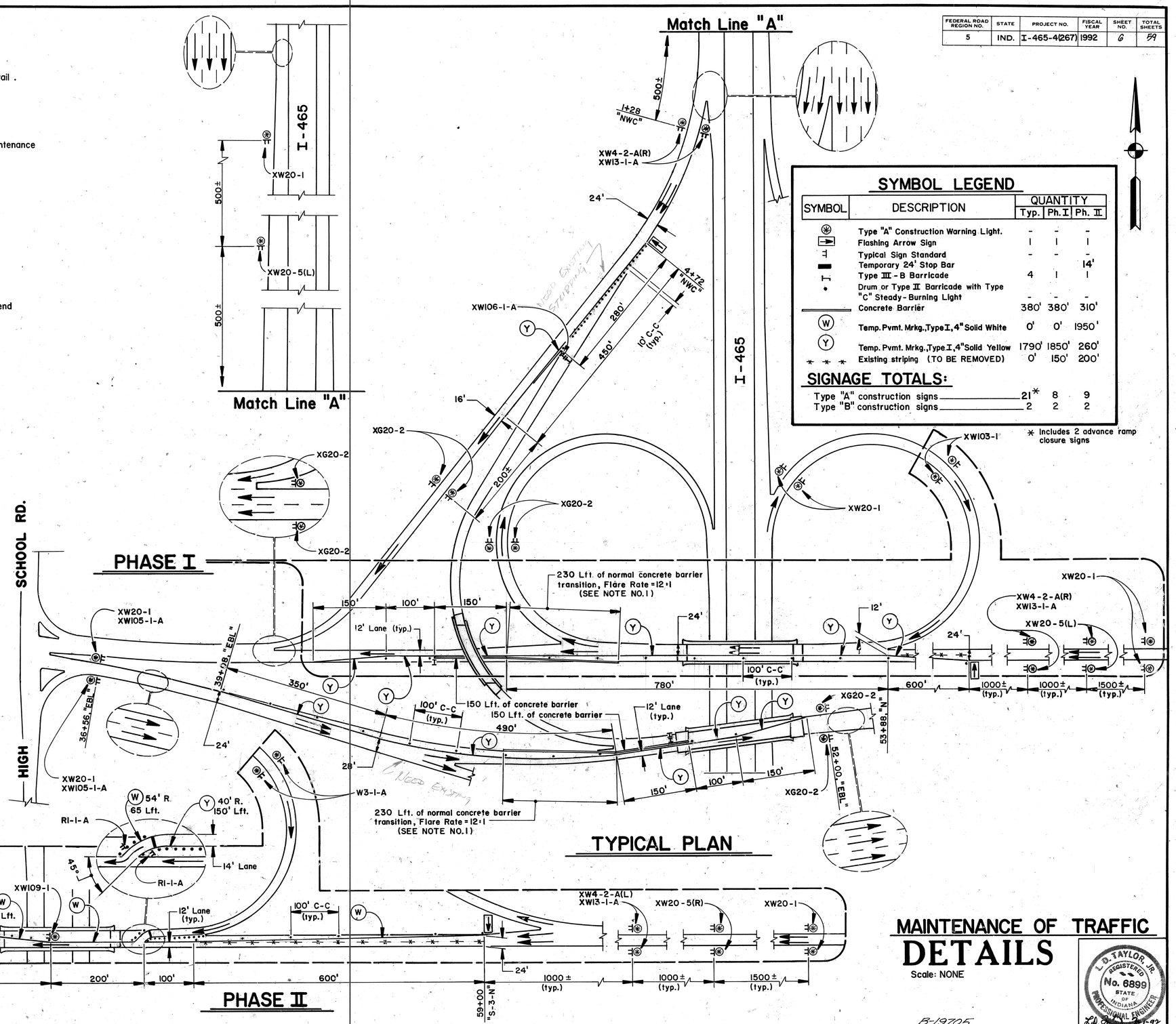

SYMBOL LEGEND

SYMBOL	DESCRIPTION	QUANTITY Typ.	Ph. I	Ph. II
	Type "A" Construction Warning Light.	-	-	-
	Flashing Arrow Sign	1	1	1
	Typical Sign Standard	-	-	-
	Temporary 24' Stop Bar			14'
	Type III - B Barricade	4	1	1
	Drum or Type II Barricade with Type "C" Steady-Burning Light	-	-	-
	Concrete Barrier	380'	380'	310'
W	Temp. Pvmt. Mrkg., Type I, 4" Solid White	0'	0'	1950'
Y	Temp. Pvmt. Mrkg., Type I, 4" Solid Yellow	1790'	1850'	260'
* * *	Existing striping (TO BE REMOVED)	0'	150'	200'

SIGNAGE TOTALS:

Type "A" construction signs	21*	8	9
Type "B" construction signs	2	2	2

* Includes 2 advance ramp closure signs

MAINTENANCE OF TRAFFIC DETAILS

Scale: NONE

L. D. TAYLOR, JR. REGISTERED No. 6899 STATE OF INDIANA PROFESSIONAL ENGINEER

B-19705

PROJECT NO.	LINE	SHEET NO.	FILE
T-465-4(267)		6/29	

1976

TP107

FEDERAL ROAD REGION NO.	STATE	PROJECT NO.	FISCAL YEAR	SHEET NO.	TOTAL SHEETS
5	IND.	T-465-4(267)	1992	7	59

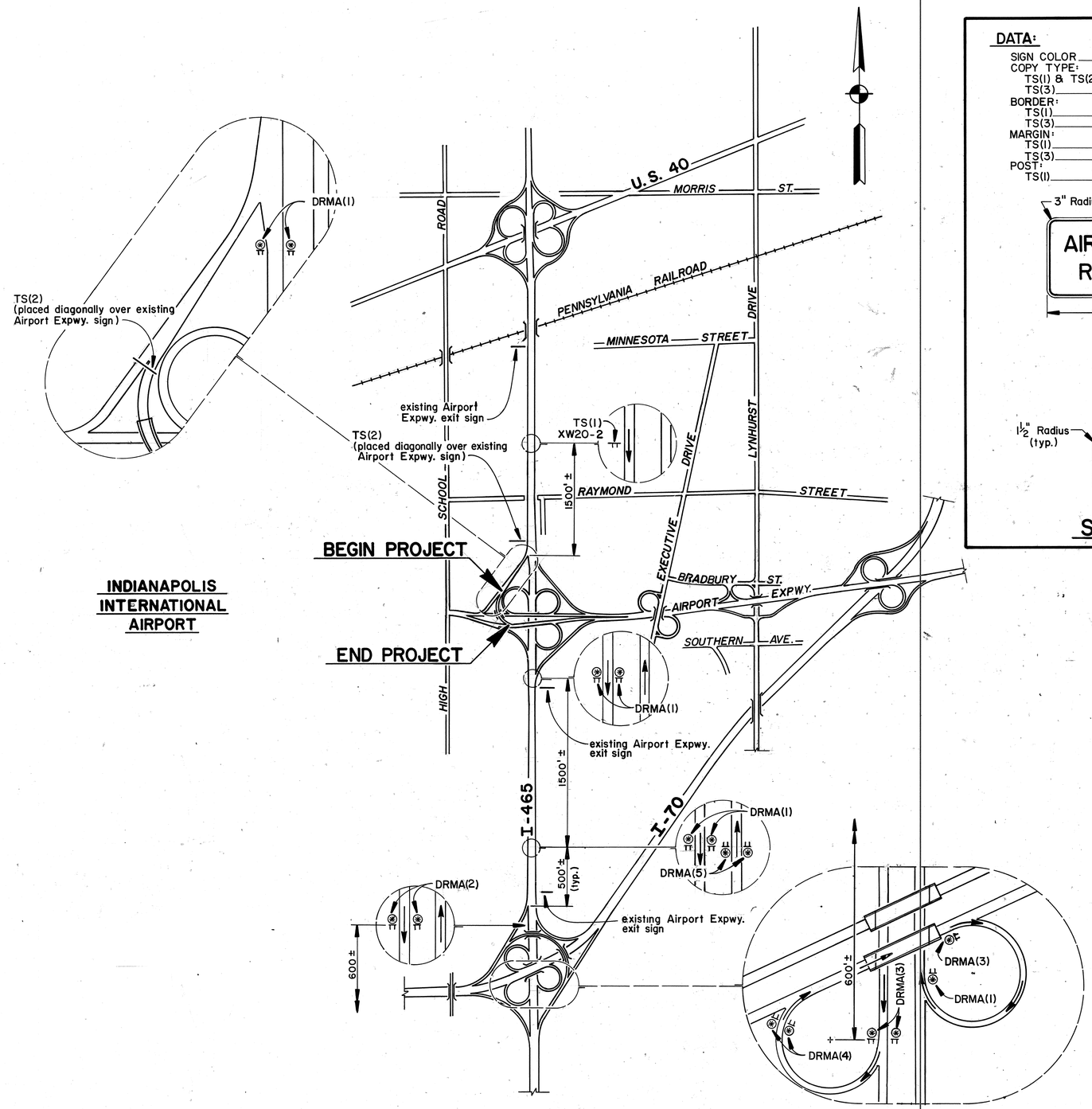

DATA:

SIGN COLOR _____ See note no. 3
COPY TYPE:
TS(1) & TS(2) ____ 12" - Series "D"
TS(3) _____ 4" - Series "D"
BORDER:
TS(1) _____ 1¼" Wide
TS(3) _____ ⅝" Wide
MARGIN:
TS(1) _____ ¾" Wide
TS(3) _____ ⅜" Wide
POST:
TS(1) _____ Two 6" x 8" southern pine post

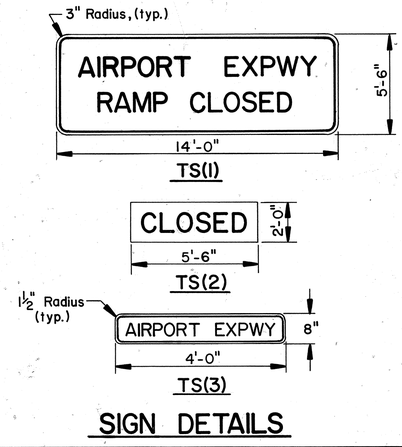

SIGN DETAILS

SUMMARY

SIGNAGE TOTALS:

DETOUR ROUTE MARKER ASSEMBLIES _____ 16 - Req'd.
TYPE "A" CONSTRUCTION SIGNS _____ 5 - Req'd.
TYPE "B" CONSTRUCTION SIGNS _____ 0 - Req'd.

SYMBOL LEGEND

SYMBOL	DESCRIPTION
⊥	Typical Standard
⊛	Type "A" Construction Warning Light

SIGN LEGEND *

CODE NO.	QTY.	DESCRIPTION	SIZE
DRMA(1)	7	XM4-8, TS(3), M6-3	-
DRMA(2)	2	XM4-8, TS(3), M5-2(R)	-
DRMA(3)	3	XM4-8, TS(3), M6-2(R)	-
DRMA(4)	2	XM4-8, TS(3), R4-7a	-
DRMA(5)	2	XM-4-6, XM4-8, TS(3), M6-3	-
TS(1)	1	See sign details	As Shown
TS(2)	2	"	"
TS(3)	-	"	"
XW20-2	2	"DETOUR AHEAD"	48" x 48"

* - SEE NOTE NO. 3

NOTES:

1. All signs to be placed in accordance with Misc. Rd. Std. MT1
2. For additional information concerning detour route marker assemblies SEE Rd. Std. Sht. 2 DETOURS
3. All signs to be constructed in accordance with INDOT STANDARDS, with only one exception - ALL SIGNS SHALL BE OF ORANGE BACKGROUND WITH BLACK LEGEND & BORDER.

AIRPORT EXPWY. DETOUR

DETAILS

Scale: NONE

L. D. TAYLOR, JR. REGISTERED No. 6899 STATE OF INDIANA PROFESSIONAL ENGINEER

B-19705

PROJECT NO.	LINE	SHT. No	TOTAL	FILE
T-465-4(267)		7	59	

1976

TP107

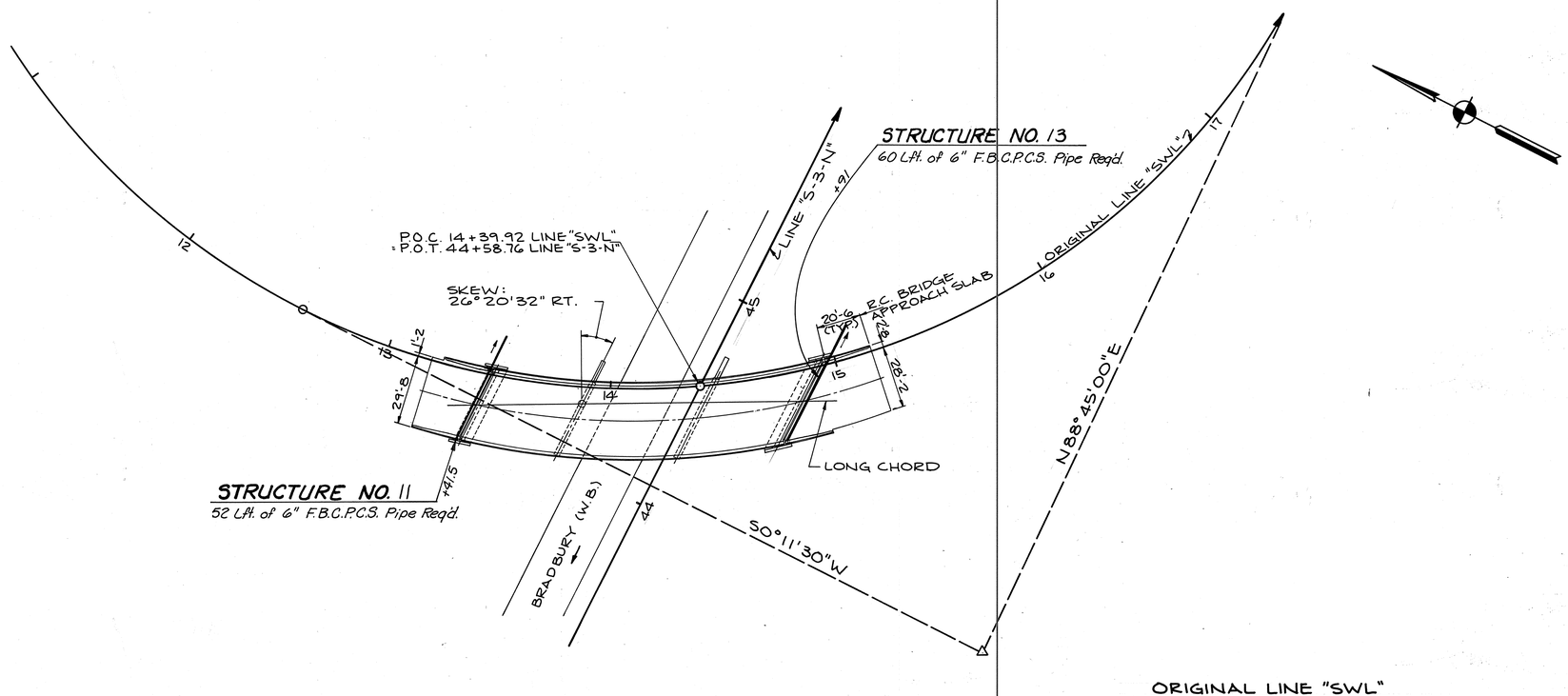

SITUATION PLAN

SCALE:-1"=30'-0", CONTOUR INTERVAL = 1 FT.

EARTHWORK TABULATION

FILL + 20%	2,771	CYS.
COMMON EXCAVATION	3,072	CYS.
FOUNDATION EXCAVATION (UNCLASSIFIED)	149	CYS.
"B" BORROW FOR STRUCTURE BACKFILL	125	CYS.

ABOVE QUANTITIES DO NOT INCLUDE ANY QUANTITIES FOR THE EXCAVATION AND BACKFILLING FOR AREAS REQUIRING "SPECIAL SUBGRADE TREATMENT"; HOWEVER EXCAVATION FOR SUBGRADE TREATMENT IS ESTIMATED AT 128 CYS.

THE ESTIMATE OF QUANTITIES FOR BENCHING ARE 2,107 CYS. FOR CUT AND 2,528 CYS. FOR FILL AND ARE NOT INCLUDED IN THE EARTHWORK TABULATION ABOVE. THE COST OF BENCHING IS TO BE INCLUDED IN THE COST OF OTHER ITEMS.

ORIGINAL LINE "SWL" CURVE DATA

P.I. 15+94.04 "SWL"
Δ = 91°26'30" LT.
D = 17° 30'
R = 327.41'
T = 335.75'
L = 522.52'
E = 141.55'
S.E. = 0.08'/.

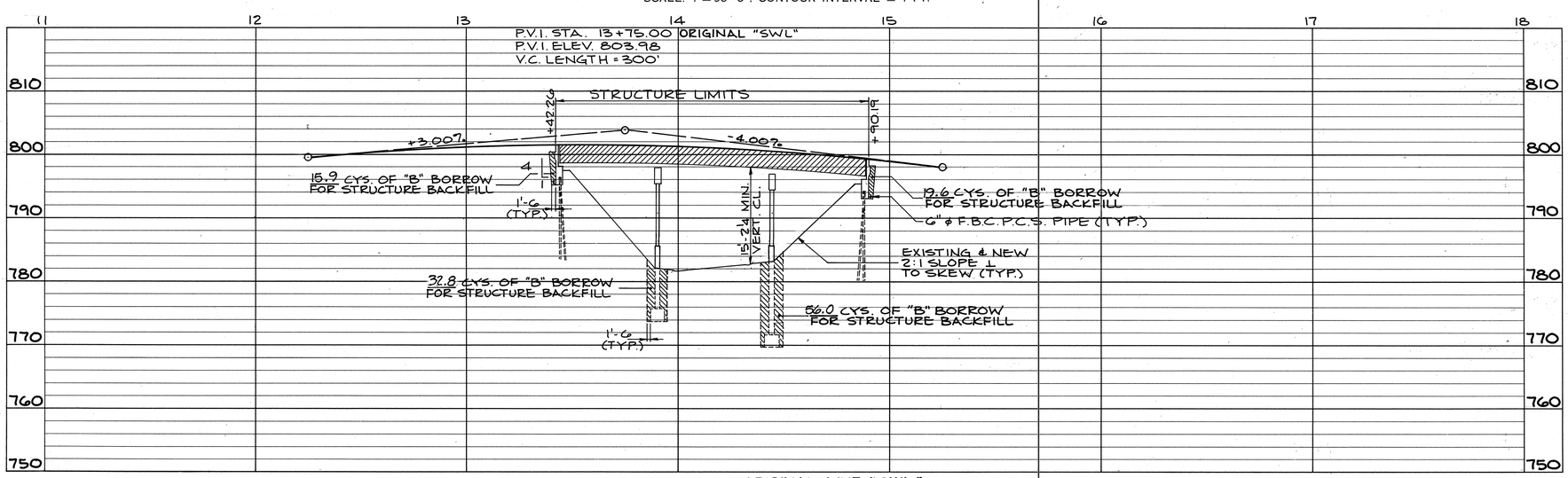

PROFILE ON ORIGINAL LINE "SWL"

SCALES: HORIZ. 1"=30'-0" VERT. 1"= 10'-0

NOTE: FIELD NOTES, BOOK

LAYOUT

CONTINUOUS COMPOSITE STEEL BEAM BRIDGE
3 SPANS: 1@ 48'-8 1/2; 1@ 53'-0 1/16; 1@ 38'-9 13/16 SKEW: 26° 20' 32" RT.
29'-4 CLEAR ROADWAY 465 RAMP OVER BRADBURY (W.B.)

INDIANA DEPARTMENT OF HIGHWAYS

MARION COUNTY

SCALE:—AS NOTED DATE:- July 7 1992

RECOMMENDED FOR APPROVAL:- L. D. Taylor Jr. SENIOR DESIGNER

DRAWING:- S1 OF S19 SHEET:- 8 OF 59
PROJECT:-IR-465-4( ) STATION:—
BRIDGE CONTRACT NO. B-19705
BRIDGE FILE:-I-465-154-4649DRB

L. D. TAYLOR, JR. REGISTERED No. 6899 STATE OF INDIANA PROFESSIONAL ENGINEER

DRAWN	SLG	C'K'D	LS
DESIGNED	TS	C'K'D	LS
TRACED		C'K'D	

SF-22396

TP117

LINE "SWL" CURVE DATA

P.I. STA. = 15+94.04 LINE "SWL"
Δ = 91°26'30" LT.
D = 17°30'00"
T = 335.75'
L = 522.52'
R = 327.41'
E = 141.55'
S.E. = 0.08 FT./FT.

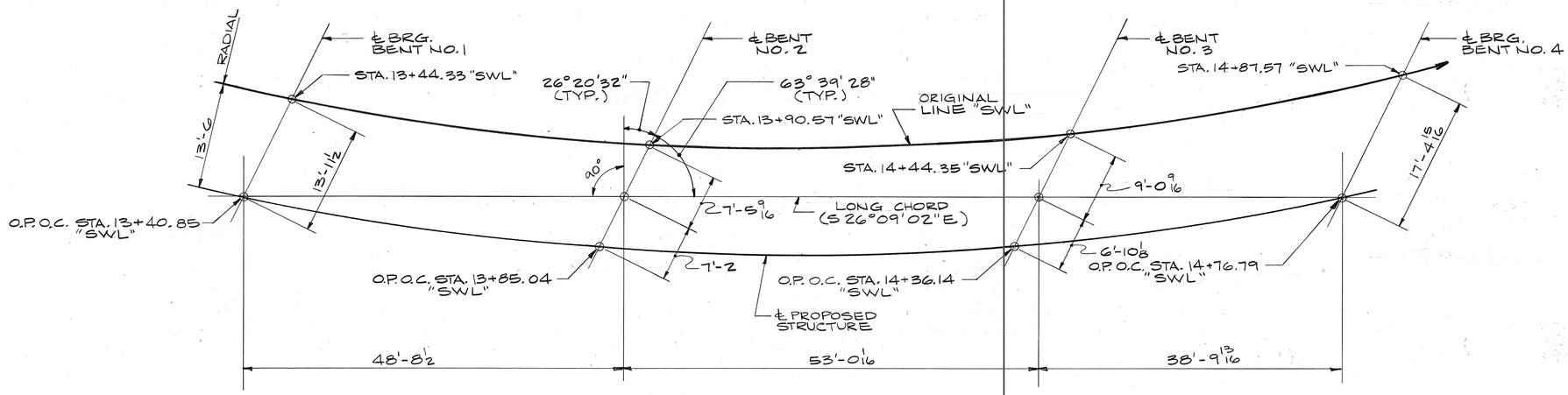

TIE UP PLAN

SCALE: 1/8" = 1'-0

STANDARD DRAWINGS		
BR. STD.	RD. STD.	PURPOSE
C1		REINFORCING BAR NOTES, BAR BENDING
		DETAILS & PILE SHELL FIELD SPLICE DETAILS
C3		JOINT DETAILS, OPTIONAL RAILING VERT.
		REINF. SPLICE AND NOTCH IN SLAB
D		ROADWAY DRAIN TYPE "OS-D"
S1		"B" BORROW FOR STRUCTURE BACKFILL
		& 6"ϕ F.B.C.P.C.S. PIPE
	JTS. A	CONSTRUCTION JOINTS
	MA	BENCH MARK TABLET
	MB4	BERM DRAINAGE DETAILS
	MI-1	RUMBLE STRIPS
	MN	UNDERDRAIN DETAILS
	MP	PIPE FOR UNDERDRAINS
	G-1	W-BEAM GUARDRAIL COMPONENTS
	G-2	THRIE-BEAM
	G-3	W-BEAM GUARDRAIL ASSEMBLIES
	T-1	GUARDRAIL TRANSITION TYPE GB
	T-2	GUARDRAIL TRANSITION TYPE GP
	T-3	GUARDRAIL TRANSITION TYPE VH
	T-4	PIER CONNECTION DETAILS
	E-2	GUARDRAIL END TREATMENT TYPE OS
	CB-2	TEMPORARY CONCRETE BARRIER
	DET. 1	STANDARD DETOUR SIGNS
	DET. 2	STANDARD DETOUR SIGNS
	DET. 2A	STANDARD DETOUR SIGNS & DEVICES
	DET. 3	STANDARD DETOUR SIGNS
	DET. 3A	STANDARD DETOUR SIGNS
	DET. 4	STANDARD DETOUR SIGNS
	DET. 5A	SIGN DESIGN DETAILS

DESIGN DATA

LIVE LOAD: DESIGNED FOR HS20-44 LOADING WITH IMPACT AND DISTRIBUTION IN ACCORDANCE WITH 1989 A.A.S.H.T.O. SPECIFICATIONS. CHECKED FOR SPECIAL LOADING OF 2-24,000 LB. AXLES SPACED AT 4'-0 CENTERS.

DEAD LOAD: ACTUAL WEIGHT + 35#/SQ. FT. OF ROADWAY TO PROVIDE FOR THE WEIGHT OF FUTURE WEARING SURFACE.

FLOOR SLAB: DESIGNED FOR 16,000# WHEEL LOAD PLUS IMPACT. STRUCTURAL DEPTH OF 6 1/2 INCHES.

ALLOWABLE STRESSES: TO BE IN ACCORDANCE WITH 1989 A.A.S.H.T.O. SPECIFICATIONS.

DESIGN STRENGTHS: CONCRETE: f'_c = 3,000 PSI
REINFORCING: f_y = 40,000 PSI

DESIGN METHODS: SUPERSTRUCTURE SLAB - SERVICE LOAD DESIGN METHOD
SUPERSTRUCTURE BEAMS - STRENGTH DESIGN METHOD
END BENTS & INTERIOR BENT CAPS - SERVICE LOAD DESIGN METHOD
INTERIOR BENT COLUMNS - STRENGTH DESIGN METHOD

SEISMIC CRITERIA: DESIGNED IN ACCORDANCE WITH 1983 A.A.S.H.T.O. "GUIDE SPECIFICATIONS FOR SEISMIC DESIGN OF HIGHWAY BRIDGES," INCLUDING 1985 INTERIM SPECIFICATIONS, USING SEISMIC PERFORMANCE CATEGORY "A" AND 0.05 ACCELERATION COEFFICIENT.

GENERAL NOTES

1. PLANS FOR EXISTING STRUCTURE ARE ON FILE AT THE INDIANA DEPARTMENT OF TRANSPORTATION. THESE PLANS ARE AVAILABLE ON REQUEST.
2. WHERE NEW WORK IS TO BE FITTED TO OLD WORK, THE CONTRACTOR SHALL CHECK ALL DIMENSIONS AND CONDITIONS IN THE FIELD AND REPORT ANY ERRORS OR DISCREPANCIES TO THE ENGINEER AND ASSUME RESPONSIBILITY FOR THEIR CORRECTNESS AND THE FIT OF THE NEW PART TO THE OLD.
3. DEPTH OF FOOTINGS TO BE EXTENDED IF FOUND NECESSARY. SEE ARTICLE 206.11(C) OF THE SPECIFICATIONS.
4. PILES SHALL HAVE MINIMUM BEARING VALUE SHOWN ON DETAIL DRAWINGS. DETERMINE PILE LENGTHS BY SECTION 701 OF THE SPECIFICATIONS.
5. FOR DETAILS OF STEEL ENCASED CONCRETE PILES, SEE BRIDGE STD. C1 AND APPLICABLE ARTICLES IN THE SPECIFICATIONS.
6. REINFORCING STEEL COVERING SHALL BE 2 1/2" IN TOP AND 1" MIN. IN BOTTOM OF FLOOR SLABS, 3" IN FOOTINGS EXCEPT BOTTOM STEEL WHICH SHALL BE 4" AND 2" IN ALL OTHER PARTS, UNLESS NOTED OTHERWISE.
7. CONCRETE IN SUPERSTRUCTURE, LAST END BENT MUDWALL POUR AND RAILING TO BE CLASS "C".
8. CONCRETE IN FOOTINGS AND COLLISION WALLS TO BE CLASS "B".
9. CONCRETE IN END BENTS, INT. BENT CAPS & COLUMNS TO BE CLASS "A".
10. CONTINUOUS CONCRETE POURS SHALL BE REQUIRED BETWEEN CONSTRUCTION JOINTS AS SHOWN IN DETAIL PLANS.
11. CHAMFER EXPOSED EDGES 1", UNLESS NOTED.
12. TOLERANCE IN POSITION OF PILE HEAD MAXIMUM 2" IN END BENTS.
13. ONE STANDARD TYPE "OS-D" ROADWAY DRAIN TO BE PLACED AS SHOWN ON DWG. S17.
14. THE TOP OF END BENT CAPS, TOP & FRONT FACE OF MUDWALLS, FACE OF END DIAPHRAGMS, ALL EXPOSED SURFACES OF CONCRETE BARRIER RAILING, TOP OF BRIDGE DECK, FACE OF DECK COPING AND UNDERSIDE OF BRIDGE DECK FROM COPING TO DRIP BEAD TO BE SURFACE SEALED.

TIE-UP DIMENSIONS

INDIANA DEPARTMENT OF TRANSPORTATION

SCALE:—As Noted DATE:- July 7 1992

SENIOR DESIGNER

DRAWING:- 32 OF 59 SHEET:- 9 OF 59
PROJECT:- IR-465-4( ) STATION:—
BRIDGE CONTRACT NO. B-19705
BRIDGE FILE:- I-465-154-4649DRB

L. D. TAYLOR, JR. REGISTERED No. 6899 STATE OF INDIANA PROFESSIONAL ENGINEER

DESIGNED TS C'K'D
DRAWN MM C'K'D LS
TRACED C'K'D

SF-22317

TP101

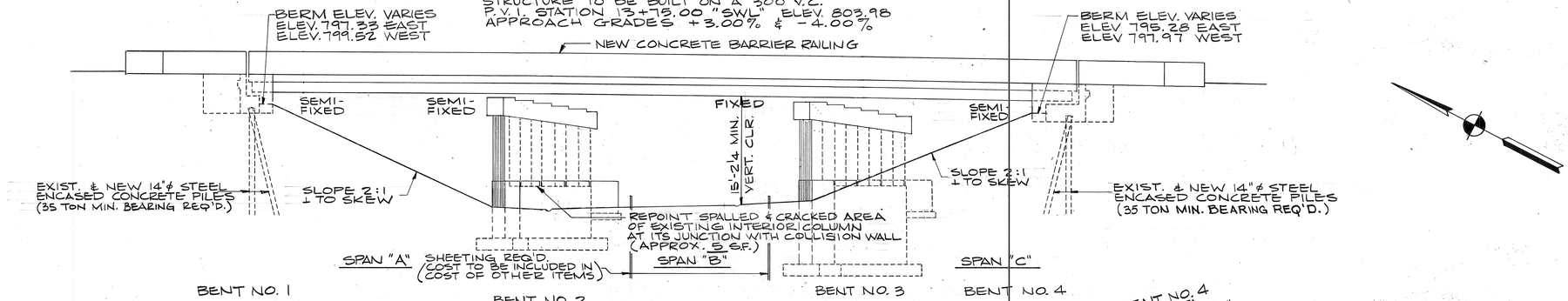

ELEVATION

SCALE: 3/32" = 1'-0

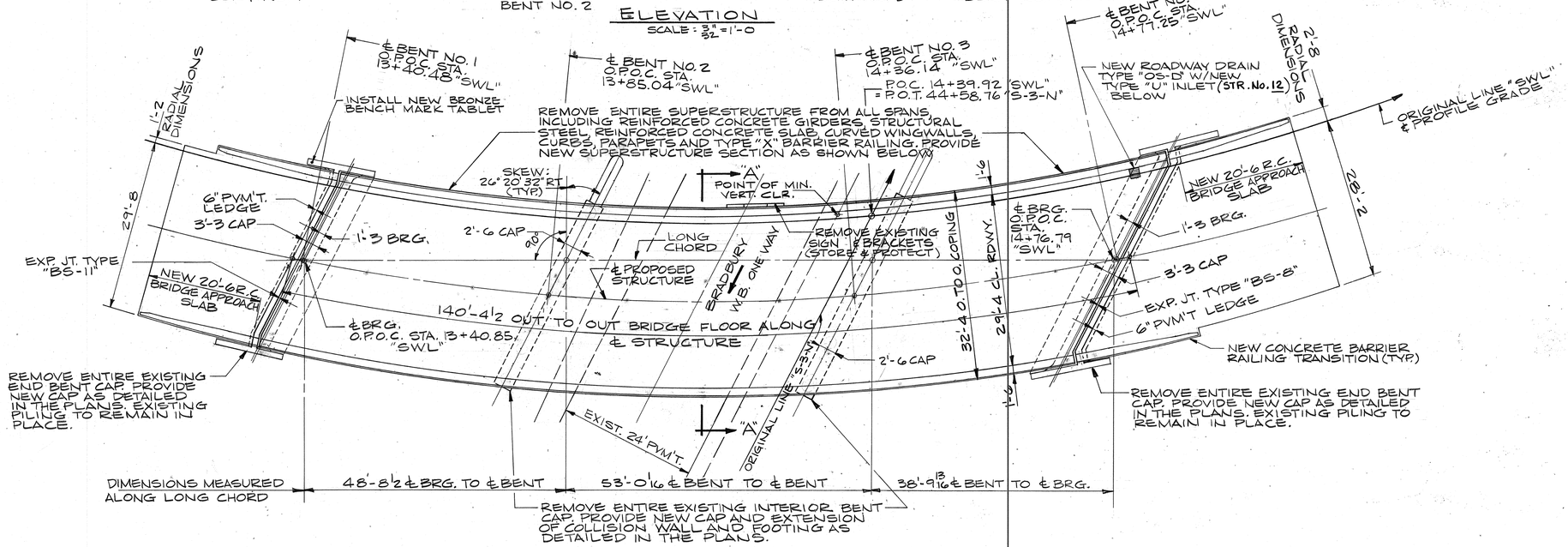

PLAN

SCALE: 3/32" = 1'-0

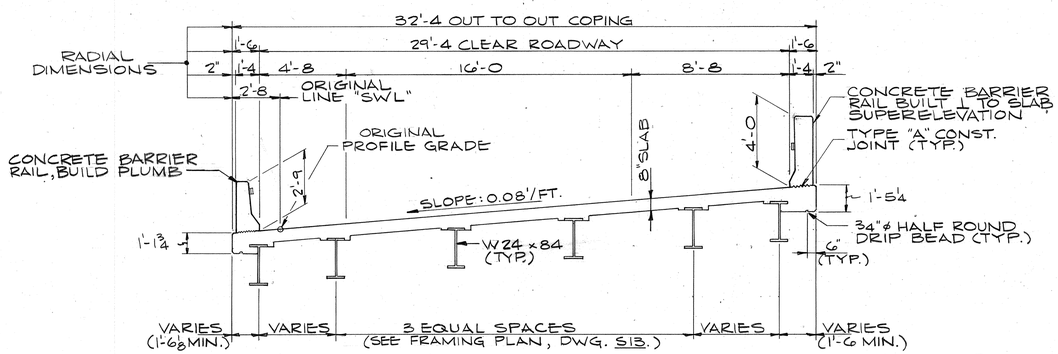

SECTION "A-A"

SCALE: 1" = 1'-0

DESIGNED T.S.	C'K'D		
DRAWN S.L.G.	C'K'D L.S.		
TRACED	C'K'D		

SF-22317

NOTE:

ALL SUPERSTRUCTURE REMOVAL, SUBSTRUCTURE REMOVAL AND EXISTING SIGN REMOVAL AS REFERENCED ABOVE TO BE PAID FOR AS STRUCTURE REMOVAL, PORTIONS.

DESIGN DATA

DESIGNED FOR HS 20-44 LOADING IN ACCORDANCE WITH 1989 A.A.S.H.T.O. SPECIFICATIONS. CHECKED FOR SPECIAL LOADING OF 2-24000 LB. AXLES SPACED @ 4'-0 CENTERS.

DESIGNED IN ACCORDANCE WITH 1983 A.A.S.H.T.O. "GUIDE SPECIFICATIONS FOR SEISMIC DESIGN OF HIGHWAY BRIDGES", INCLUDING 1985 INTERIM SPECIFICATIONS, USING SEISMIC PERFORMANCE CATEGORY "A" AND 0.05 ACCELERATION COEFFICIENT.

NOTE:

FOR GENERAL NOTES AND LIST OF STANDARD DRAWINGS, SEE DWG. S2.

GENERAL PLAN

CONTINUOUS COMPOSITE STEEL BEAM BRIDGE
3 SPANS: 1@ 48'-8½; 1@ 53'-0 1/16; 1@ 38'-9 13/16 SKEW: 26° 20' 32" RT.
29'-4 CLEAR ROADWAY 465 RAMP OVER BRADBURY (W. B.)

INDIANA DEPARTMENT OF TRANSPORTATION

SCALE:—AS NOTED DATE:- July 7 1992

SENIOR DESIGNER

L. D. TAYLOR, JR. REGISTERED No. 6899 STATE OF INDIANA PROFESSIONAL ENGINEER

DRAWING:- S3 OF S19 SHEET:- 10 OF 59
PROJECT:- IR-465-4( ) STATION:—
BRIDGE CONTRACT NO. B-19705
BRIDGE FILE:- I-465-154-4649DRB

TP101

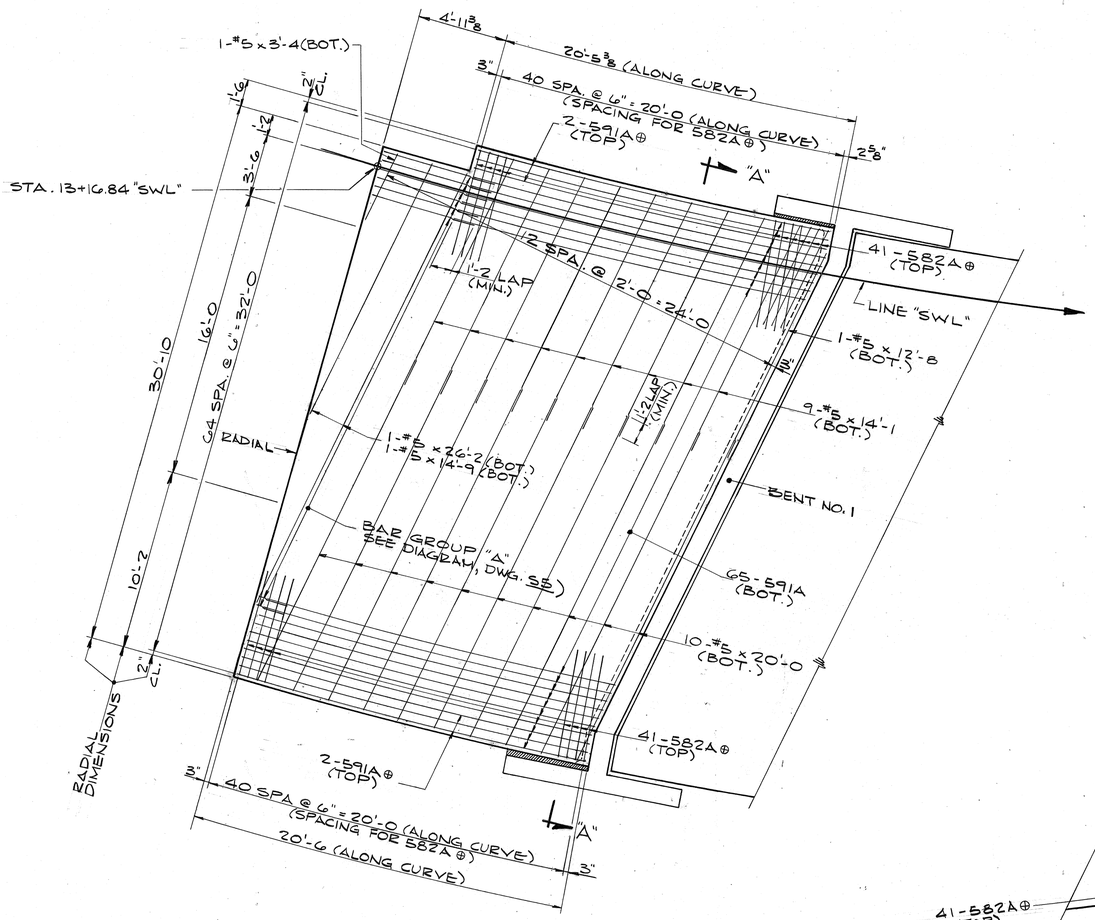

NORTH APPROACH SLAB PLAN

SCALE: 1/4" = 1'-0

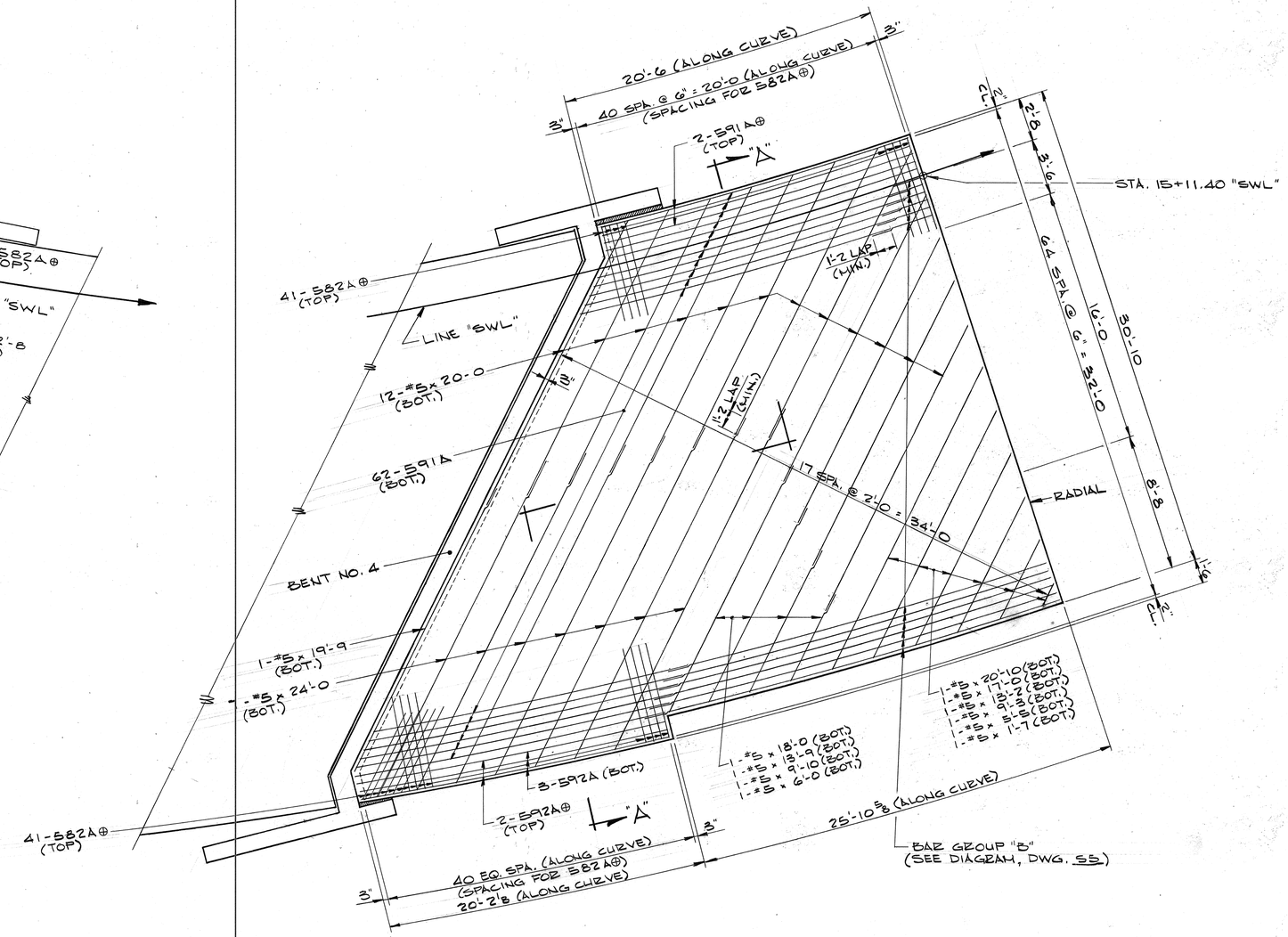

SOUTH APPROACH SLAB PLAN

SCALE: 1/4" = 1'-0

⊕ - DENOTES EPOXY COATED REINFORCING STEEL.

NOTES:

1. FOR REINFORCING BAR NOTES, SEE BR. STD. C1.
2. FOR GENERAL NOTES, SEE DWG. S2.
3. THE REMOVAL OF BITUMINOUS MATERIAL ON EXISTING R.C. APPROACH SLABS TO BE INCLUDED IN THE COST OF PAVEMENT REMOVAL.
4. THE COST OF WELDED WIRE FABRIC AND EXCAVATION FOR THE CONSTRUCTION OF R.C. BRIDGE APPROACH SLABS TO BE INCLUDED IN THE COST OF CONCRETE PAVEMENT (12").
5. FOR SECTION "A-A", LONGITUDINAL SECTION, BAR DETAILS AND BILL OF MATERIALS, SEE DWG. S5.
6. PROVIDE PREFORMED JOINT FILLER MATERIAL BETWEEN WINGWALLS AND EDGE OF R.C. APPROACH SLABS.

R.C. APPROACH SLAB

INDIANA DEPARTMENT OF TRANSPORTATION

SCALE:- AS NOTED

DATE:- July 7 1992

SENIOR DESIGNER

DRAWING:- S4 OF S19 SHEET:- 11 OF 59

PROJECT:- IR - 465 - 4( ) STATION:-

BRIDGE CONTRACT NO. B-19705

BRIDGE FILE:- I-465-154-4649DRB

L. D. TAYLOR, JR. REGISTERED No. 6899 STATE OF INDIANA PROFESSIONAL ENGINEER

DESIGNED		C'K'D	
DRAWN	SF & SG	C'K'D	LS
TRACED		C'K'D	

SF-22317

TP101

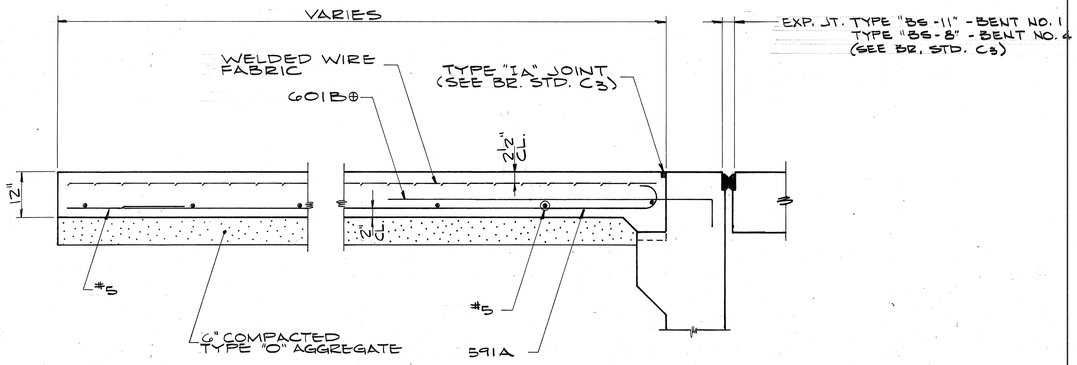

LONGITUDINAL SECTION THRU APPROACH SLAB
NO SCALE

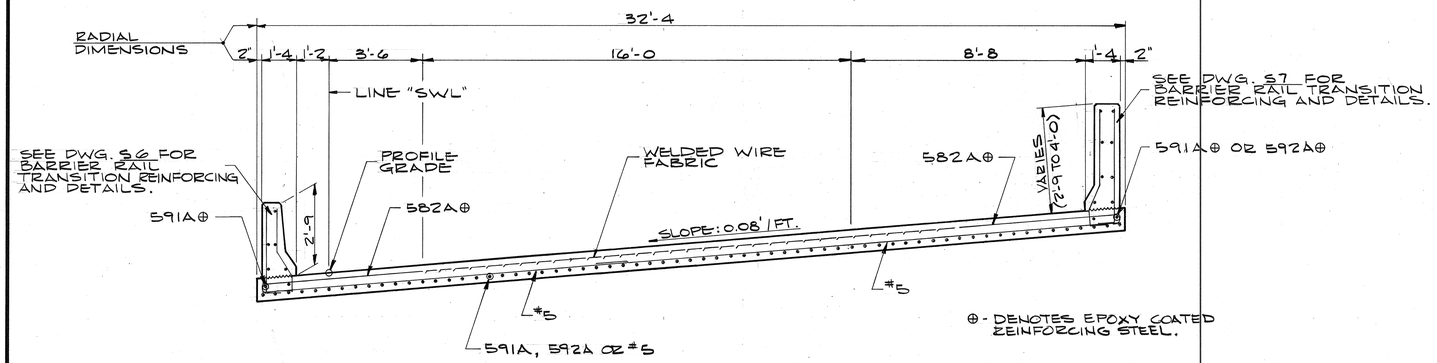

⊕ - DENOTES EPOXY COATED REINFORCING STEEL.

SECTION "A-A"
SCALE: 3/8" = 1'-0

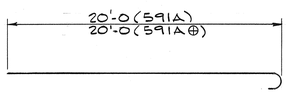

591A x 20'-7
591A⊕ x 20'-7

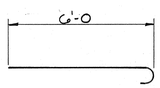

582A⊕ x 6'-7

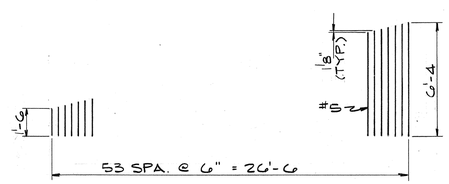

BAR GROUP "A"
TOTAL LENGTH = 211'-6

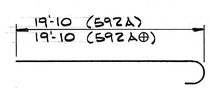

592A x 20'-5
592A⊕ x 20'-5

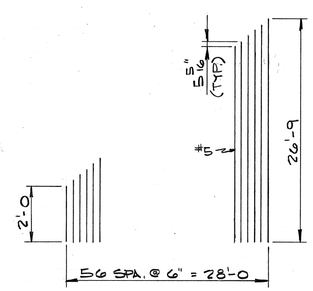

BAR GROUP "B"
TOTAL LENGTH = 819'-5

BILL OF MATERIALS
NORTH R.C. APPR. SLAB

MK OR SIZE	NO. PCS.	LENGTH	WEIGHT
582A⊕	82	6'-7	
591A⊕	4	20'-7	
TOTAL #5⊕			649#
TOTAL EPOXY COATED REINF.			649#
591A	65	20'-7	
#5	1	211'-6	GROUP "A"
#5	1	26'-2	
#5	10	20'-0	
#5	1	14'-9	
#5	9	14'-1	
#5	1	12'-8	
#5	1	3'-4	
TOTAL #5			2,016#
TOTAL UNCOATED REINF.			2,016#
CONCRETE			
CONCRETE PAVEMENT, REINF., 12"			81.6 S.Y.
MISCELLANEOUS			
TYPE "O" COMPACTED AGG.			27.2 TON

SOUTH R.C. APPR. SLAB

MK OR SIZE	NO. PCS.	LENGTH	WEIGHT
582A ⊕	82	6'-7	
591A ⊕	2	20'-7	
592A ⊕	2	20'-5	
TOTAL #5 ⊕			649#
TOTAL EPOXY COATED REINF.			649#
591A	62	20'-7	
592A	3	20'-5	
#5	1	819'-5	GROUP "B"
#5	7	24'-0	
#5	1	20'-10	
#5	12	20'-0	
#5	1	19'-9	
#5	1	18'-0	
#5	1	17'-0	
#5	1	13'-9	
#5	1	13'-2	
#5	1	9'-10	
#5	1	9'-3	
#5	1	6'-0	
#5	1	5'-5	
#5	1	1'-7	
TOTAL #5			2,815#
TOTAL UNCOATED REINF.			2,815#
CONCRETE			
CONCRETE PAVEMENT, REINF., 12"			115.3 S.Y.
MISCELLANEOUS			
TYPE "O" COMPACTED AGG.			38.4 TON

R.C. APPROACH SLAB DETAILS
INDIANA DEPARTMENT OF TRANSPORTATION

SCALE:— AS NOTED DATE:- July 7 1992

SENIOR DESIGNER L. D. Taylor Jr.

L. D. TAYLOR, JR. REGISTERED No. 6899 STATE OF INDIANA PROFESSIONAL ENGINEER

DRAWING:- S5 OF S19 SHEET:- 12 OF 59
PROJECT:- IR - 465 - 4( ) STATION:—
BRIDGE CONTRACT NO. B-19705
BRIDGE FILE:- I-465-154-4649 DRB

DESIGNED		C'K'D	
DRAWN	SLG	C'K'D	LS
TRACED		C'K'D	

SF-22317

TP101

REGION	STATE	PROJECT NO.	YEAR	SHEET	TOTAL
5	IND	IR-465-4( )	199	13	59

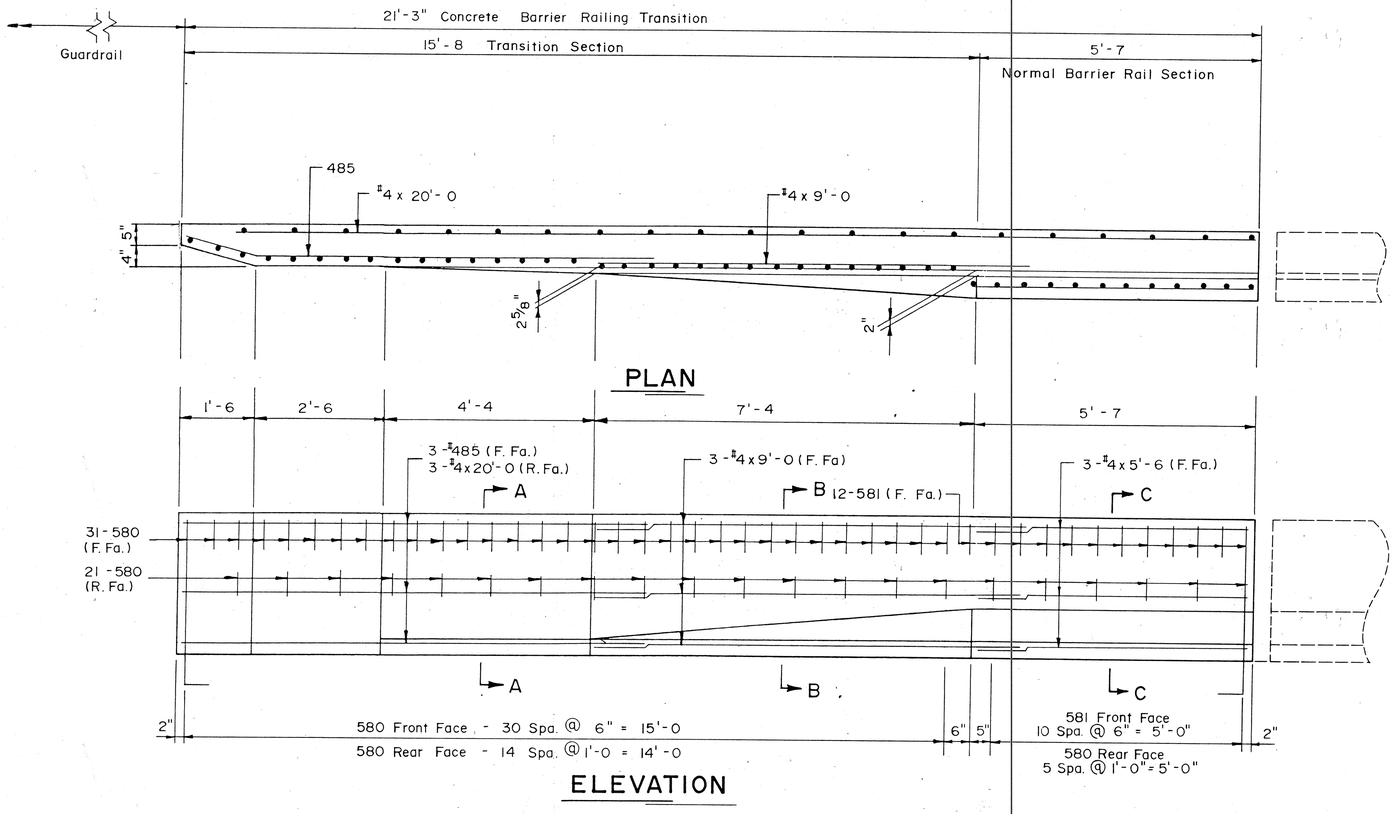

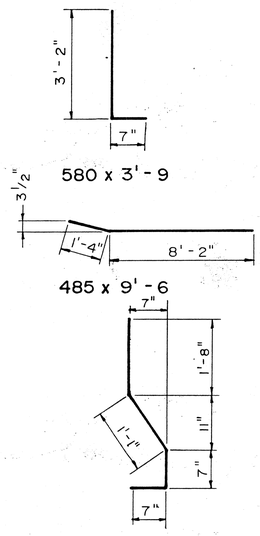

BILL OF MATERIALS				BILL OF MATERIALS			
EPOXY COATED REINF. STEEL				REINFORCING STEEL			
SIZE & MARK	NO. OF BARS	LENGTH	WEIGHT #	SIZE & MARK	NO. OF BARS	LENGTH	WEIGHT #
580	52	3'-9"					
581	12	3'-11"					
Total # 5			252#				
485	3	9'-6"					
#4	3	20'-0"					
#4	3	9'-0"					
#4	3	5'-6"					
Total # 4			88#				
Total Epoxy Coated Stl.			340#				
Class "C" Concrete Railing							1.9 Cys.
SURFACE SEAL							140 S.F.

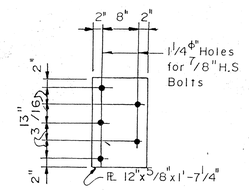

PLATE WASHER - PW

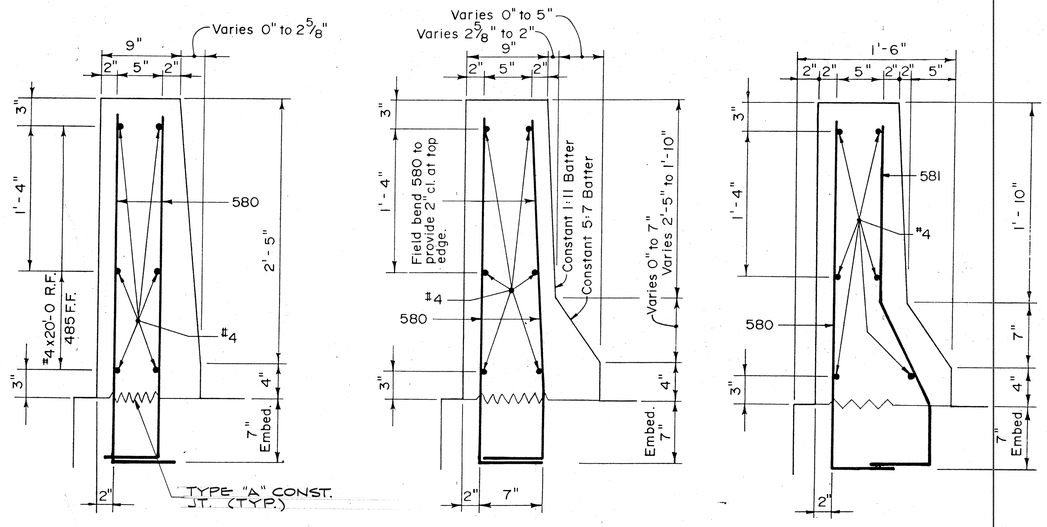

SECTION A - A

SECTION B - B

SECTION C - C

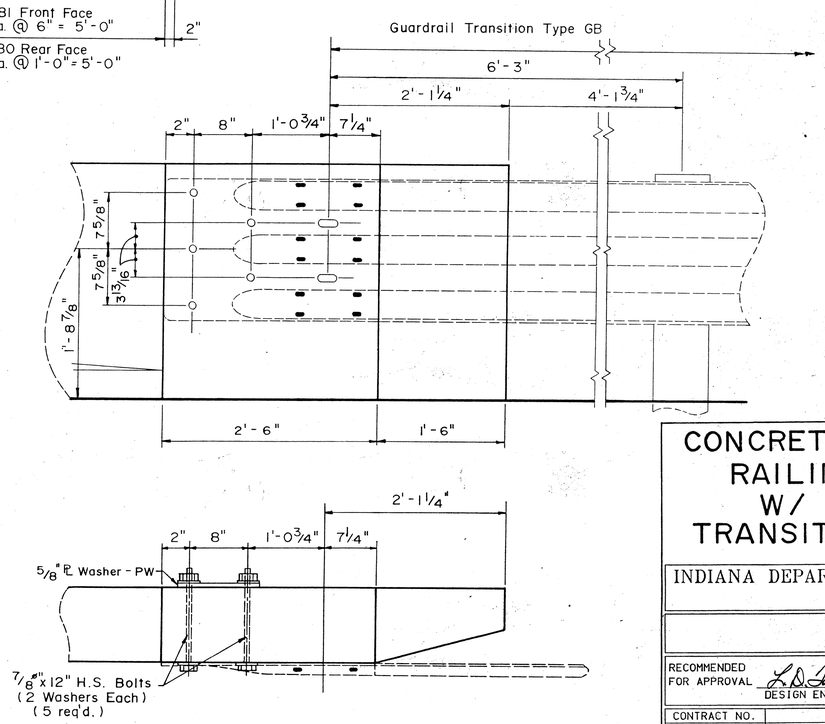

ATTACHMENT TO GUARDRAIL TRANSITION TYPE GB

CONCRETE BARRIER BRIDGE RAILING TRANSITION W/ THRIE BEAM TRANSITION CONNECTION

INDIANA DEPARTMENT OF TRANSPORTATION

RECOMMENDED FOR APPROVAL — DESIGN ENGINEER — DATE July 7, 1992

L. D. TAYLOR, JR. REGISTERED No. 6899 STATE OF INDIANA PROFESSIONAL ENGINEER

CONTRACT NO.	STRUCTURE NO.			
B-19705				
DES. NO.	PROJECT NO.	YEAR	SHEET	TOTAL
17215	IR-465-4( )	199	13	59

DWG. 56 OF 519

[Code-TRBR]

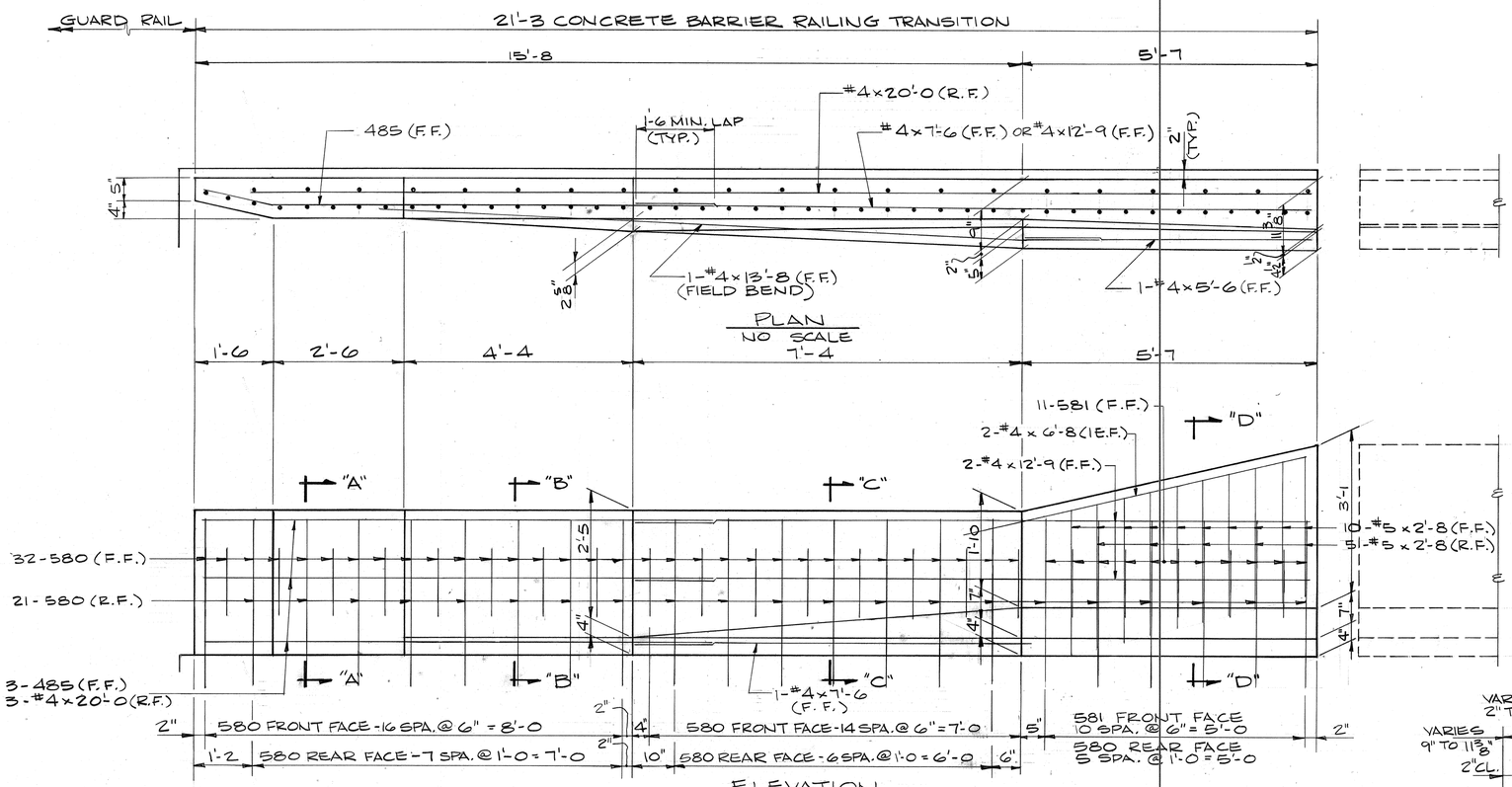

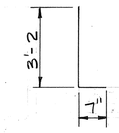

580 x 3'-9

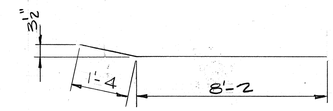

485 x 9'-6

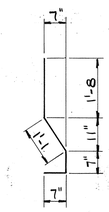

581 x 3'-11

BILL OF MATERIALS

MK OR SIZE	NO. PCS.	LENGTH	WEIGHT
580	53	3'-9	
581	11	3'-11	
#5	15	2'-8	
TOTAL #5			294#
485	3	9'-6	
#4	3	20'-0	
#4	1	13'-8	
#4	2	12'-9	
#4	1	7'-6	
#4	2	6'-8	
#4	1	5'-6	
TOTAL #4			103#
TOTAL EPOXY COATED REINF.			397#
CLASS "C" CONC. RAILING			2.1 C.Y.
SURFACE SEAL			149 S.F.

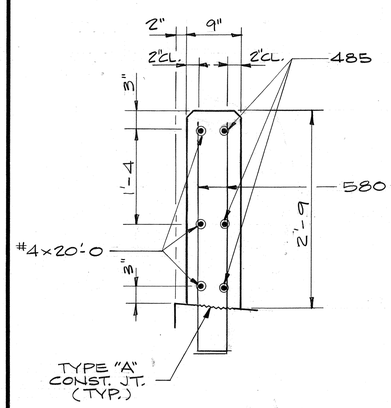

SECTION "A-A"
SCALE: 1" = 1'-0

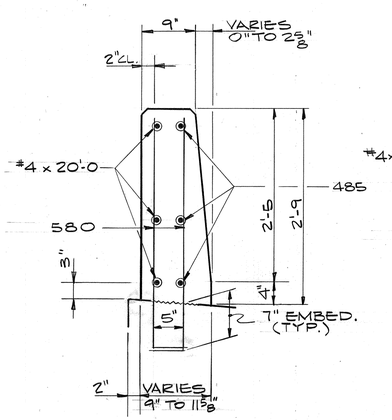

SECTION "B-B"
SCALE: 1" = 1'-0

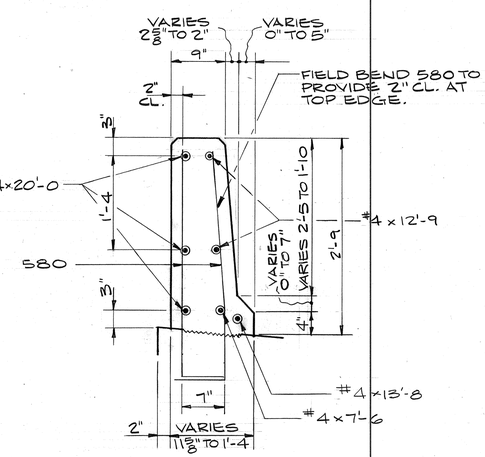

SECTION "C-C"
SCALE: 1" = 1'-0

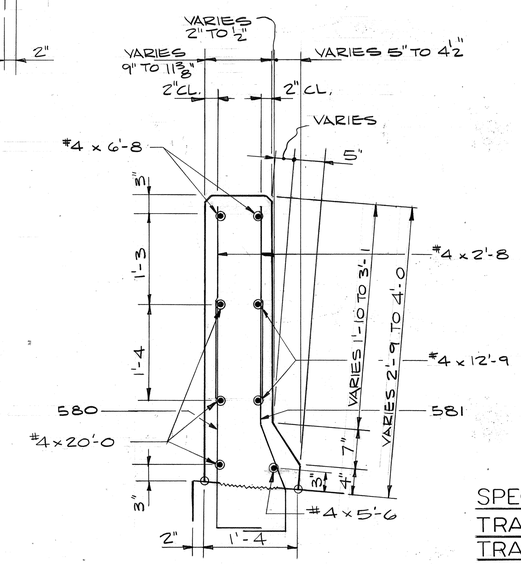

SECTION "D-D"
SCALE: 1" = 1'-0

NOTES:

1. ALL REINFORCING STEEL TO BE EPOXY COATED.
2. ALL EXPOSED SURFACES OF BARRIER RAILING TRANSITION TO BE SURFACE SEALED.
3. FOR REINFORCING BAR NOTES, SEE BR. STD. C1.
4. FOR TYPE "A" CONST. JT. DETAIL, SEE BR. STD. C3.
5. FOR GUARDRAIL TRANSITION TYPE GB ATTACHMENT DETAILS, SEE DWG. S6.

SPECIAL CONCRETE BARRIER BRIDGE RAILING TRANSITION W/ THRIE BEAM TRANSITION CONNECTION

INDIANA DEPARTMENT OF TRANSPORTATION

SCALE:—AS NOTED

DATE:- July 7, 1992

L. D. Taylor
SENIOR DESIGNER

L. D. TAYLOR, JR. REGISTERED No. 6899 STATE OF INDIANA PROFESSIONAL ENGINEER

DRAWING:- S7 OF S19 SHEET:- 14 OF 19

PROJECT:- IR-465-4( ) STATION:—

BRIDGE CONTRACT NO. B-19705

BRIDGE FILE:- I-465-154-4649DRB

DESIGNED		C'K'D	
DRAWN	MM	C'K'D	L.S.
TRACED		C'K'D	

SF-22317

TP101

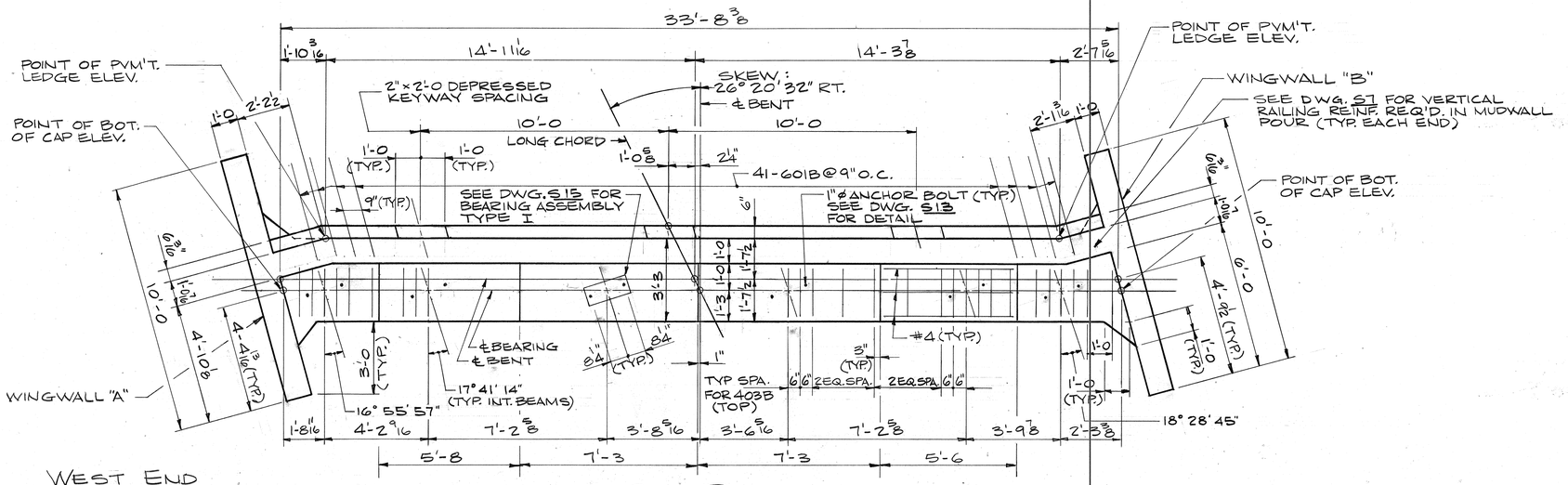

WEST END

CAP PLAN
SCALE: 3/8" = 1'-0

EAST END

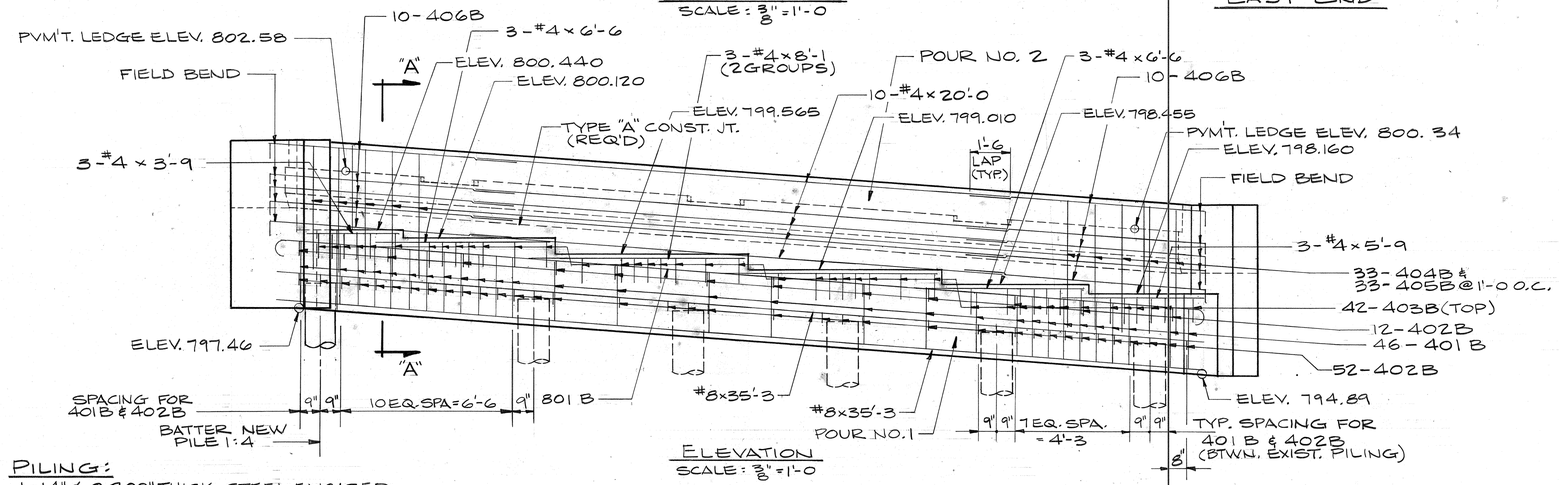

ELEVATION
SCALE: 3/8" = 1'-0

PILING:
1-14" ø, 0.209" THICK, STEEL ENCASED CONCRETE PILE x 40'-0 LONG DRIVEN TO 35 TON MIN. BEARING.

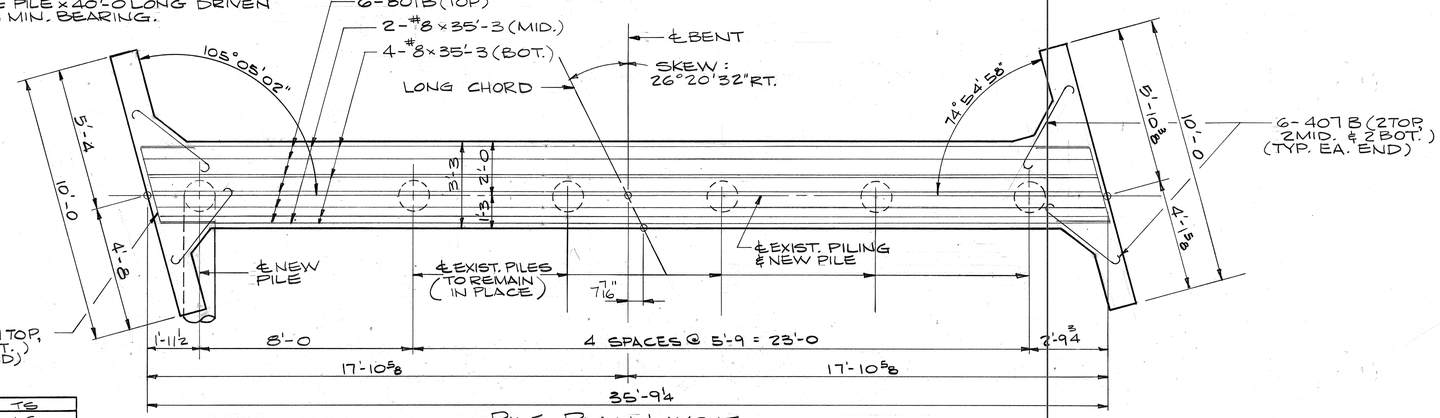

PILE PLAN LAYOUT
SCALE: 3/8" = 1'-0

DESIGNED MP	C'K'D TS
DRAWN MM	C'K'D LS
TRACED	C'K'D

SF-22317

BILL OF MATERIALS

MK. OR SIZE	NO. PCS.	LENGTH	WEIGHT
801B	6	37'-1	
#8	6	35'-3	
TOTAL #8			1,159#
601B	41	4'-9	
TOTAL #6			293#
#5	28	9'-8	
TOTAL #5			282#
401B	46	8'-11	
402B	64	3'-11	
403B	42	4'-1	
404B	33	9'-4	
405B	33	4'-1	
406B	20	9'-7	
407B	12	4'-6	
408B	6	6'-11	
#4	10	20'-0	
#4	12	9'-8	
#4	6	8'-1	
#4	6	6'-6	
#4	32	5'-11	
#4	3	5'-9	
#4	3	3'-9	
TOTAL #4			1,459#
TOTAL EPOXY COATED REINF.			3,193#
CONCRETE			
POUR NO. 1 - CLASS "A"			16.5 C.Y.
TOTAL CLASS "A" CONC.			16.5 C.Y.
POUR NO. 2 - CLASS "C"			5.7 C.Y.
TOTAL CLASS "C" CONC.			5.7 C.Y.
MISCELLANEOUS			
SURFACE SEAL			222 S.F.
1-14" ø, 0.209" THICK, STEEL			
ENCASED CONC. PILE x 40'-0			40 L.F.

NOTES:

1. FOR REINFORCING BAR NOTES, SEE BR. STD. C1.
2. FOR TYPE "A" CONST. JT., SEE BR. STD. C3.
3. FOR GENERAL NOTES, SEE DWG. S2.
4. FOR WINGWALL DETAILS, MUDWALL ELEVATIONS, SECTION "A-A" AND BAR DETAILS, SEE DWG. S12.
5. ALL REINFORCING STEEL TO BE EPOXY COATED.
6. ANCHOR BOLTS TO BE PRESET IN CONCRETE.
7. POUR NO. 2 TO BE POURED AFTER SUPERSTRUCTURE SLAB IS POURED.

BENT NO. 1

INDIANA DEPARTMENT OF TRANSPORTATION

SCALE:—AS NOTED DATE:- July 7 1992

SENIOR DESIGNER L. D. Taylor Jr.

DRAWING:- S8 OF S19 SHEET:- 15 OF 59

PROJECT:-IR-465- STATION:—

BRIDGE CONTRACT NO. B-19705

BRIDGE FILE:-I-465-154-4649DRB

L. D. TAYLOR, JR. REGISTERED No. 6899 STATE OF INDIANA PROFESSIONAL ENGINEER

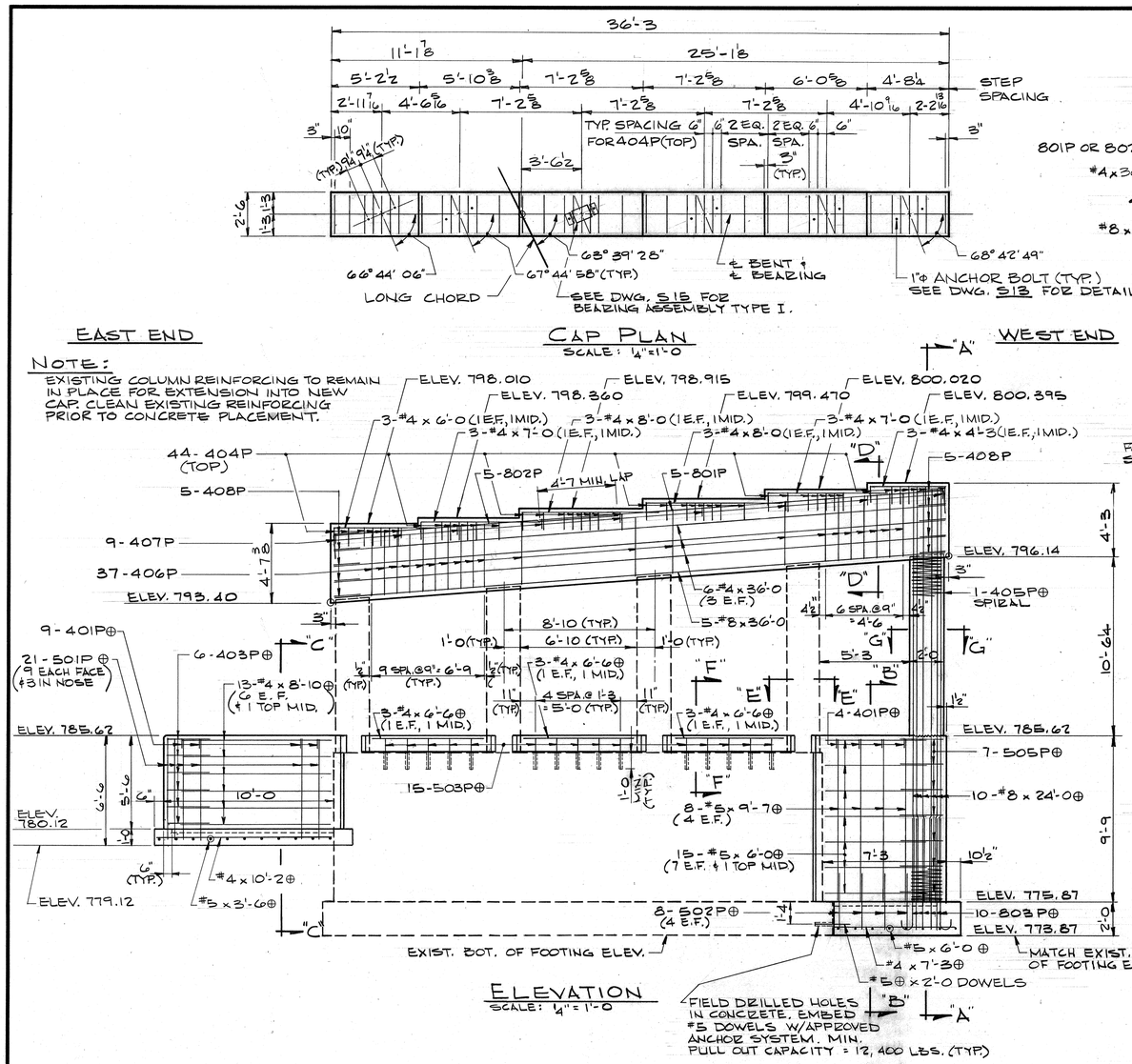

CAP PLAN
SCALE: ¼"=1'-0

ELEVATION
SCALE: ¼" = 1'-0

NOTE:
EXISTING COLUMN REINFORCING TO REMAIN IN PLACE FOR EXTENSION INTO NEW CAP. CLEAN EXISTING REINFORCING PRIOR TO CONCRETE PLACEMENT.

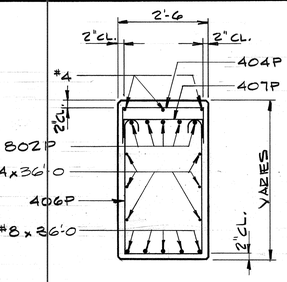

SECTION "D-D"
SCALE: ½" = 1'-0

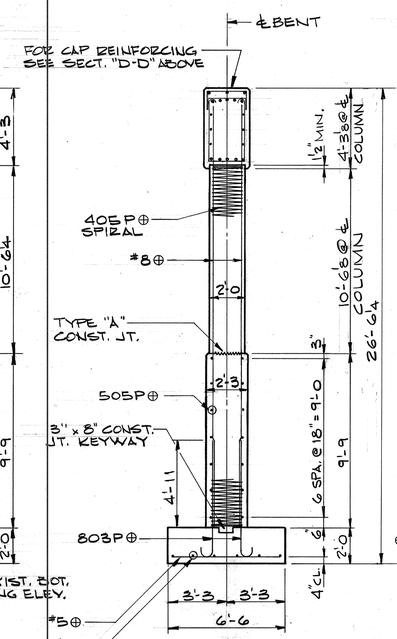

SECTION "A-A"
SCALE: ¼" = 1'-0

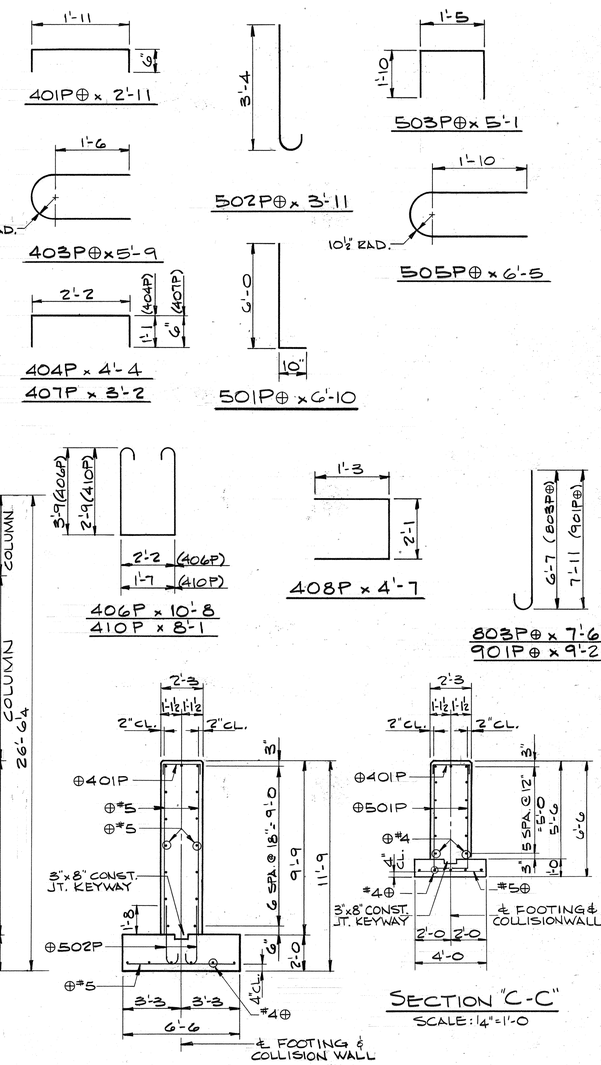

SECTION "B-B"
SCALE: ¼" = 1'-0

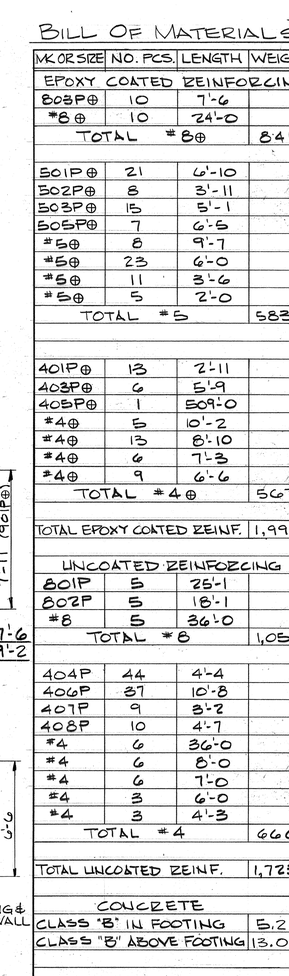

SECTION "C-C"
SCALE: ¼"=1'-0

BILL OF MATERIALS

MK. OR SIZE	NO. PCS.	LENGTH	WEIGHT
EPOXY COATED REINFORCING			
803P⊕	10	7'-6	
#8⊕	10	24'-0	
TOTAL #8⊕			841#
501P⊕	21	6'-10	
502P⊕	8	3'-11	
503P⊕	15	5'-1	
505P⊕	7	6'-5	
#5⊕	8	9'-7	
#5⊕	23	6'-0	
#5⊕	11	3'-6	
#5⊕	5	2'-0	
TOTAL #5			583#
401P⊕	13	2'-11	
403P⊕	6	5'-9	
405P⊕	1	509'-0	
#4⊕	5	10'-2	
#4⊕	13	8'-10	
#4⊕	6	7'-3	
#4⊕	9	6'-6	
TOTAL #4⊕			567#
TOTAL EPOXY COATED REINF.			1,991#
UNCOATED REINFORCING			
801P	5	25'-1	
802P	5	18'-1	
#8	5	36'-0	
TOTAL #8			1,057#
404P	44	4'-4	
406P	37	10'-8	
407P	9	3'-2	
408P	10	4'-7	
#4	6	36'-0	
#4	6	8'-0	
#4	6	7'-0	
#4	3	6'-0	
#4	3	4'-3	
TOTAL #4			666#
TOTAL UNCOATED REINF.			1,723#
CONCRETE			
CLASS "B" IN FOOTING			5.2 C.Y.
CLASS "B" ABOVE FOOTING			13.0 C.Y.
CLASS "A" IN COLUMN			1.2 C.Y.
CLASS "A" IN CAP			14.7 C.Y.
TOTAL CLASS "A"			15.9 C.Y.
MISCELLANEOUS			
FIELD DRILLED HOLES			35 EA.

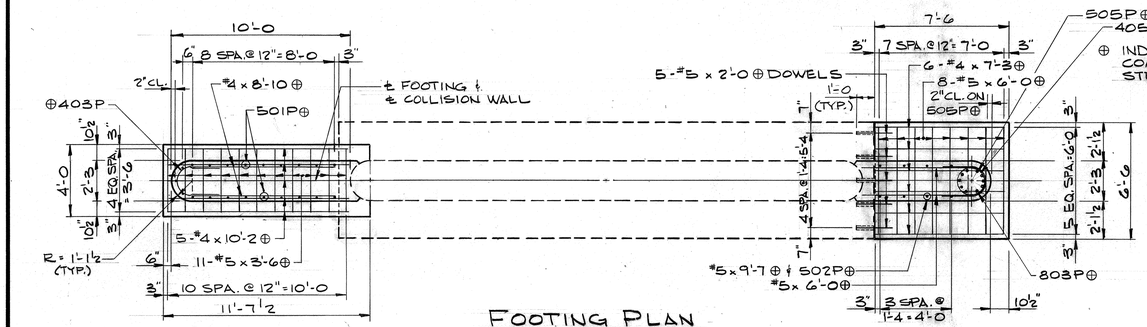

FOOTING PLAN
SCALE: ¼" = 1'-0

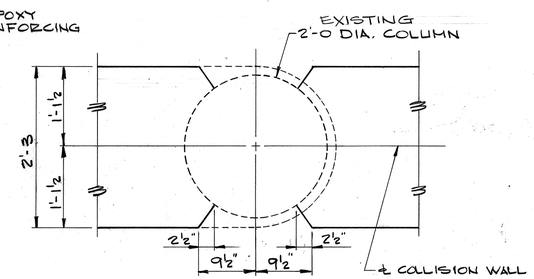

SECTION "E-E"
SCALE: 1" = 1'-0

NOTES:
1. ANCHOR BOLTS TO BE PRESET IN CONCRETE.
2. FOR ATTACHMENT DETAILS OF NOSE DEFLECTOR REQ'D. AT EAST END OF NEW COLLISION WALL, SEE RD. STD., GUARD RAIL SHEET T-4.
3. FOR REINFORCING BAR NOTES, SEE BR. STD. C1.
4. FOR GENERAL NOTES, SEE DWG. S2.
5. FOR TYPE "A" CONST. JT., SEE BR. STD. C3.
6. FOR ADDITIONAL BAR DETAILS AND SECTION "F-F" & "G-G", SEE DWG. S10.

BENT NO. 2
INDIANA DEPARTMENT OF TRANSPORTATION

SCALE:— AS NOTED
DATE:- July 7, 1992
SENIOR DESIGNER

DRAWING:-S9 OF S19 SHEET:- 16 OF 59
PROJECT:- IR-465 STATION:—
BRIDGE CONTRACT NO. B-19705
BRIDGE FILE:-I-465-154-4649DRB

L. D. TAYLOR, JR. REGISTERED No. 6899 STATE OF INDIANA PROFESSIONAL ENGINEER

DESIGNED MP	C'K'D TSS		
DRAWN SF	C'K'D LS		
TRACED	C'K'D		

SF-22317

TP101

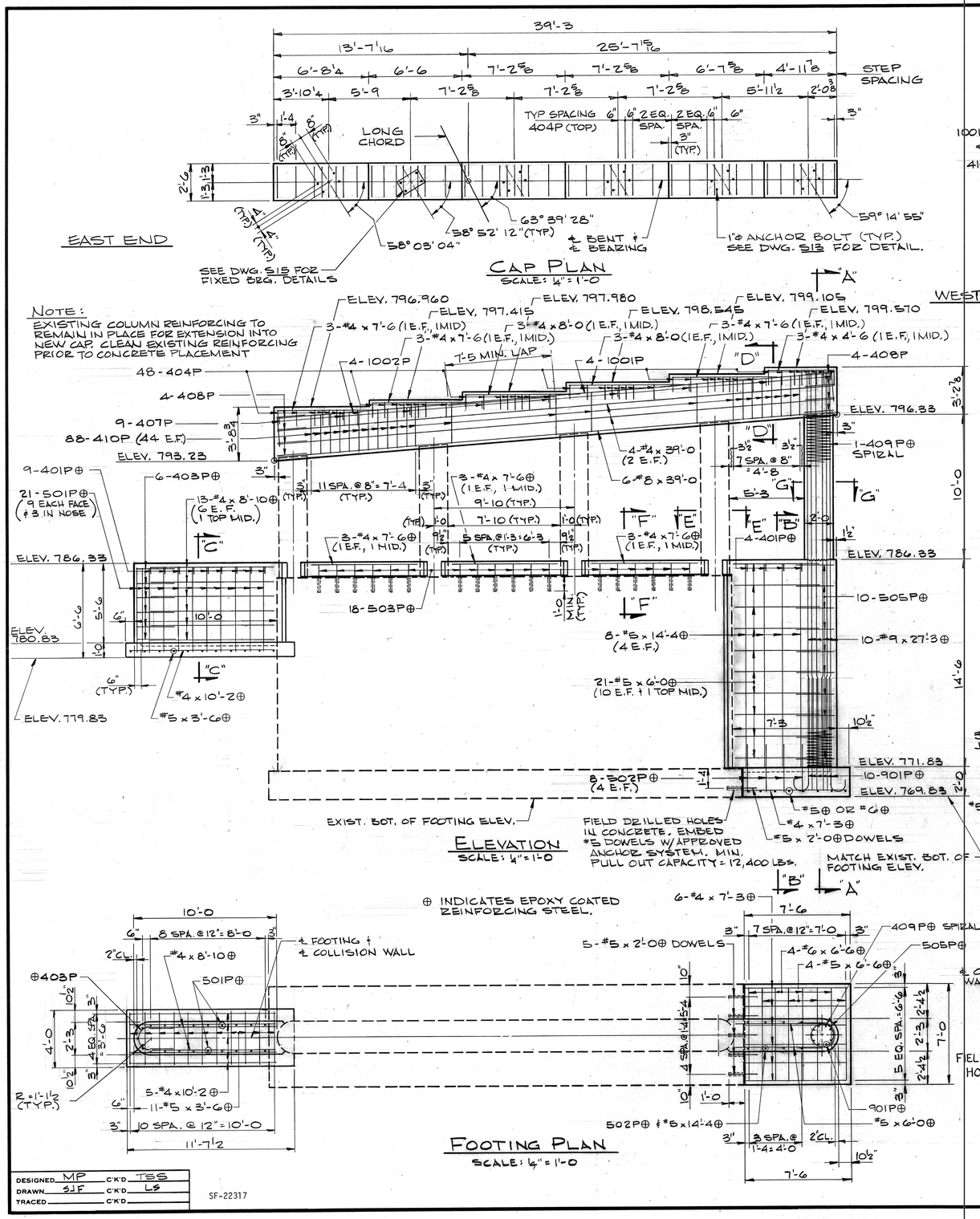

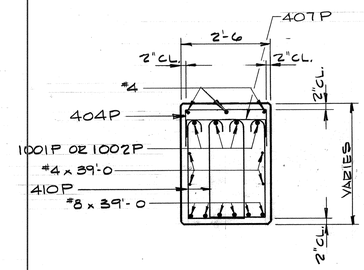

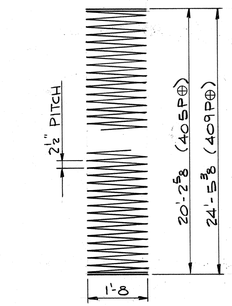

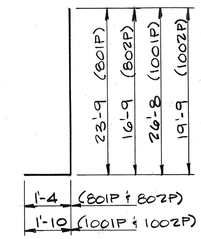

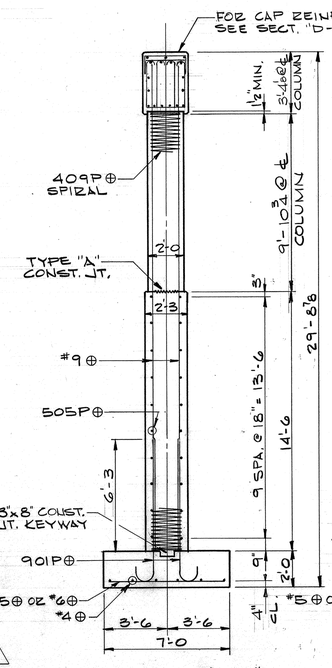

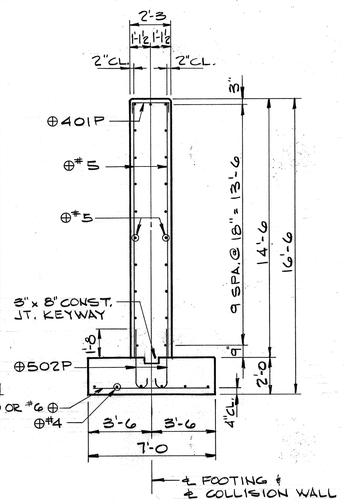

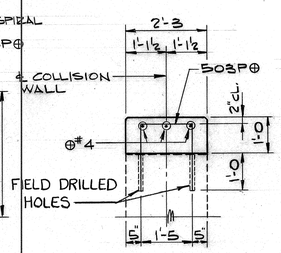

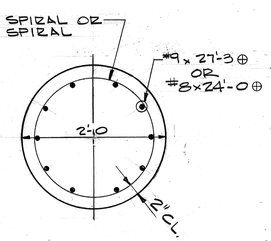

BILL OF MATERIALS

MK. OR SIZE	NO. PCS.	LENGTH	WEIGHT
EPOXY COATED REINFORCING			
901P⊕	10	9'-2	
#9⊕	10	27'-3	
TOTAL #9⊕			1,238#
#6⊕	4	6'-6	
TOTAL #6⊕			39#
501P⊕	21	6'-10	
502P⊕	8	3'-11	
503P⊕	18	5'-1	
505P⊕	10	6'-5	
#5⊕	8	14'-4	
#5⊕	4	6'-6	
#5⊕	21	6'-0	
#5⊕	11	3'-6	
#5⊕	5	2'-0	
TOTAL #5⊕			673#
401P⊕	13	2'-11	
403P⊕	6	5'-9	
409P⊕	1	612'-0	
#4⊕	5	10'-2	
*4⊕	13	8'-10	
*4⊕	9	7'-6	
#4⊕	6	7'-3	
TOTAL *4⊕			642#
TOTAL EPOXY COATED REINF.			2,592#
UNCOATED REINFORCING			
1001P	4	28'-6	
1002P	4	21'-7	
TOTAL #10			862#
#8	6	39'-0	
TOTAL #8			625#
404P	48	4'-4	
407P	9	3'-2	
408P	8	4'-7	
410P	88	8'-1	
#4	4	39'-0	
#4	6	8'-0	
#4	9	7'-6	
#4	3	4'-6	
TOTAL #4			848#
TOTAL UNCOATED REINF.			2,335#
CONCRETE			
CLASS "B" IN FOOTING			5.4 C.Y.
CLASS "B" ABOVE FOOTING			16.2 C.Y.
CLASS "A" IN COLUMN			1.2 C.Y.
CLASS "A" IN CAP			12.4 C.Y.
TOTAL CLASS "A"			13.6 C.Y.
MISCELLANEOUS			
FIELD DRILLED HOLES			41 EA.

NOTES:
1. FOR ADDITIONAL BAR DETAILS, SECTIONS "C-C" & "E-E" AND ADDITIONAL NOTES, SEE DWG. S9.

BENT NO. 3
INDIANA DEPARTMENT OF TRANSPORTATION

SCALE:—AS NOTED DATE:— July 7 1992
L. D. Taylor Jr.
SENIOR DESIGNER

L. D. TAYLOR, JR. REGISTERED No. 6899 STATE OF INDIANA PROFESSIONAL ENGINEER

DRAWING:-S10 OF S19 SHEET:-17 OF 59
PROJECT:-IR-465-4(STATION:—
BRIDGE CONTRACT NO. B-19705
BRIDGE FILE:-I-465-154-4649DRB

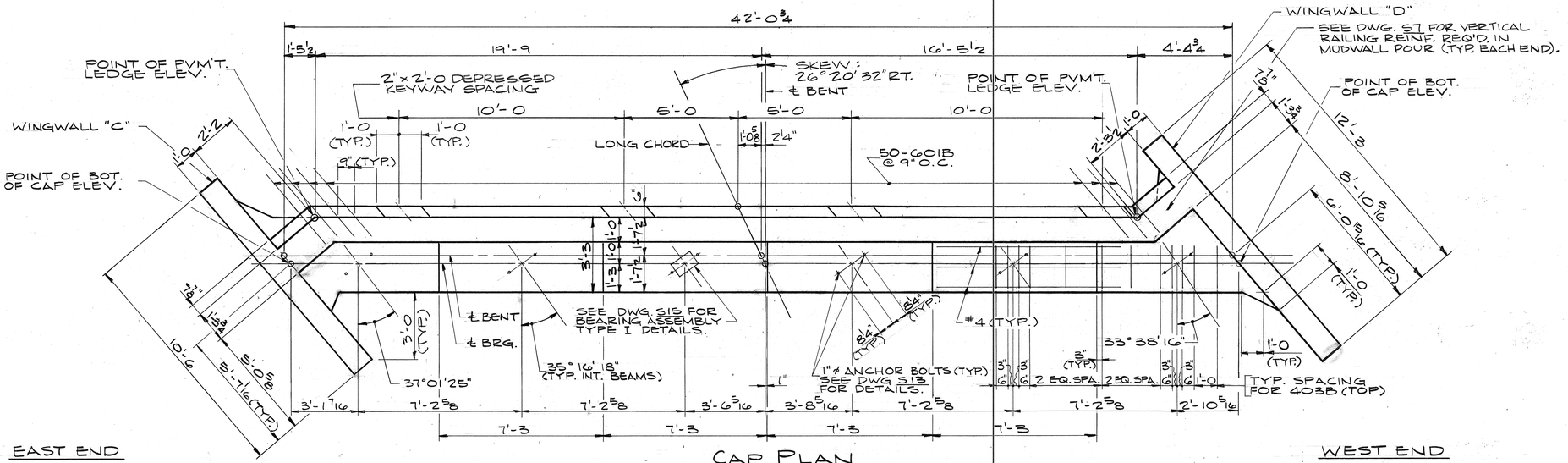

CAP PLAN

SCALE: 3/8" = 1'-0

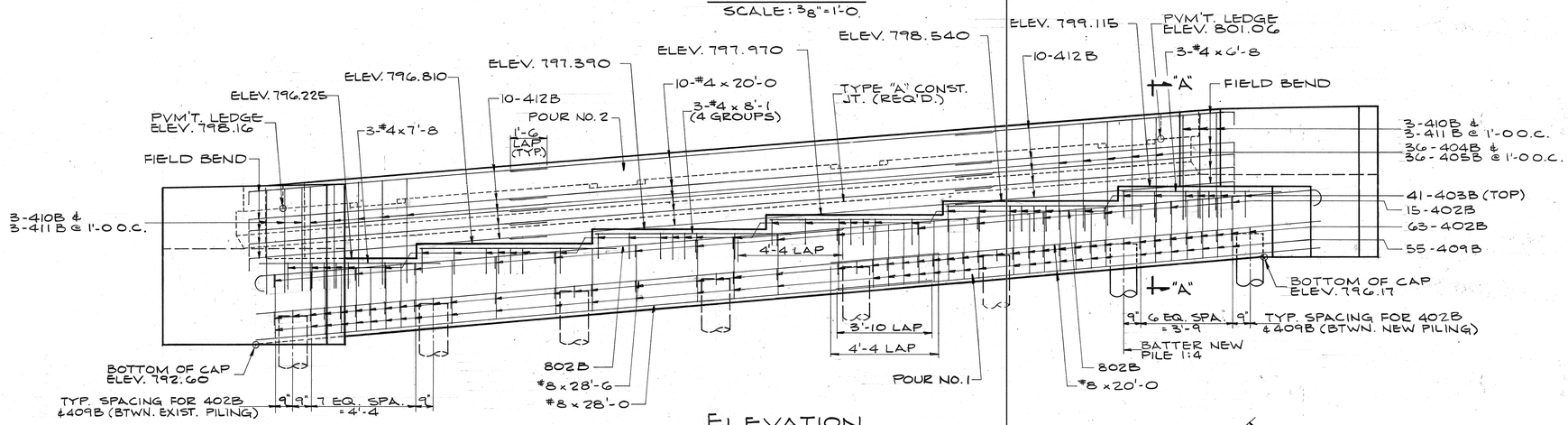

ELEVATION

SCALE: 3/8" = 1'-0

PILING:

2-14"ø, 0.209" THICK, STEEL ENCASED CONCRETE PILES x 40'-0 LONG DRIVEN TO 35 TON MINIMUM BEARING.

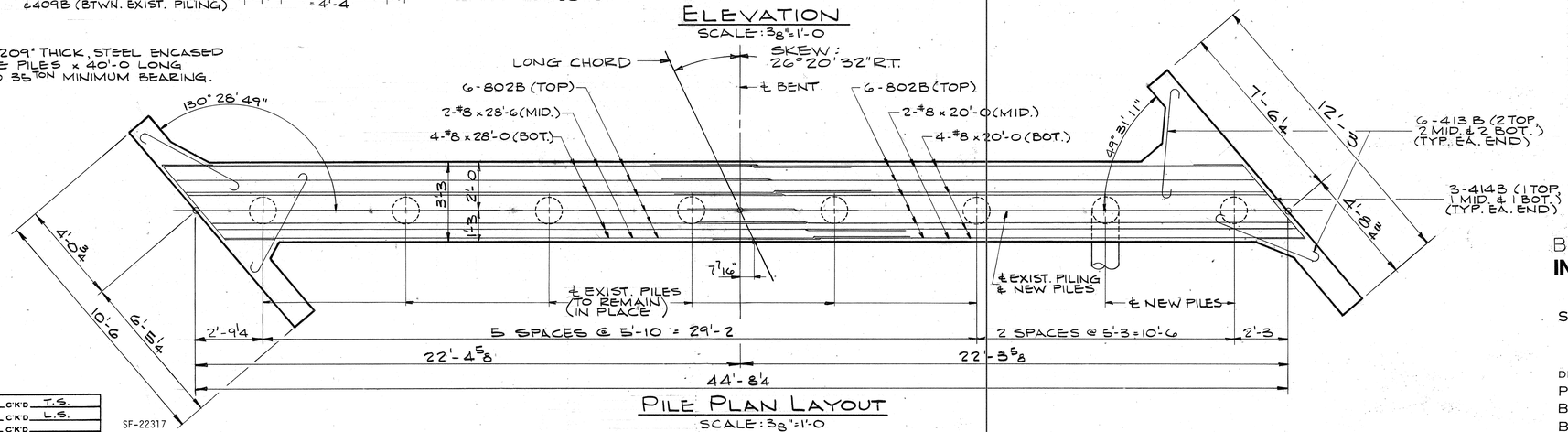

PILE PLAN LAYOUT

SCALE: 3/8" = 1'-0

BILL OF MATERIALS

MKORSIZE	NO. PCS	LENGTH	WEIGHT
802B	12	25'-3	
#8	2	28'-6	
#8	4	28'-0	
#8	6	20'-0	
TOTAL #8			1,581#
601B	50	4'-9	
TOTAL #6			357#
#5	14	11'-11	
#5	14	10'-2	
TOTAL #5			323#
402B	78	3'-11	
403B	41	4'-1	
404B	36	9'-4	
405B	36	4'-1	
409B	55	9'-1	
410B	6	8'-7	
411B	6	4'-10	
412B	20	13'-2	
413B	12	5'-6	
414B	6	7'-8	
#4	10	20'-0	
#4	6	11'-11	
#4	6	10'-2	
#4	12	8'-1	
#4	3	7'-8	
#4	3	6'-8	
#4	8	6'-1	
#4	8	5'-11	
#4	8	5'-10	
#4	10	5'-8	
TOTAL #4			1,726#
TOTAL EPOXY COATED REINF.			3,987#
CONCRETE			
POUR NO. 1 - CLASS "A"			20.9 C.Y.
TOTAL CLASS "A" CONC.			20.9 C.Y.
POUR NO. 2 - CLASS "C"			7.1 C.Y.
TOTAL CLASS "C" CONC.			7.1 C.Y.
MISCELLANEOUS			
SURFACE SEAL			261 S.F.
2-14"ø, 0.209 THICK STEEL ENCASED CONC. PILE x 40'-0			80 L.F.

NOTES:

1. FOR REINFORCING BAR NOTES, SEE BR. STD. C1.
2. FOR TYPE "A" CONST. JT., SEE BR. STD. C3.
3. FOR GENERAL NOTES, SEE DWG. S2.
4. FOR WINGWALL DETAILS, MUDWALL ELEVATIONS, SECTION "A-A" AND BAR DETAILS, SEE DWG. S12.
5. ALL REINFORCING STEEL TO BE EPOXY COATED.
6. ANCHOR BOLTS TO BE PRESET IN CONCRETE.
7. POUR NO. 2 TO BE POURED AFTER SUPERSTRUCTURE SLAB IS POURED.

BENT NO. 4

INDIANA DEPARTMENT OF TRANSPORTATION

SCALE:—AS NOTED

DATE:- July 7 1992

SENIOR DESIGNER

L. D. TAYLOR, JR. REGISTERED No. 6899 STATE OF INDIANA PROFESSIONAL ENGINEER

DRAWING:- S11 OF S19 SHEET:- 18 OF 59

PROJECT:- IR-465-4(STATION:—

BRIDGE CONTRACT NO. B-19705

BRIDGE FILE:- I-465-154-4649DRB

DESIGNED	M.P.	C'K'D	T.S.
DRAWN	S.L.G.	C'K'D	L.S.
TRACED		C'K'D	

SF-22317

TP101

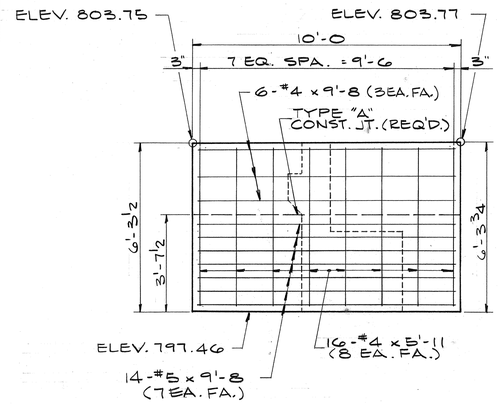

WINGWALL "A"

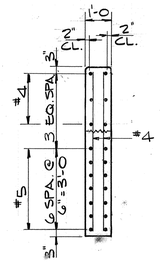

TYPICAL SECTION

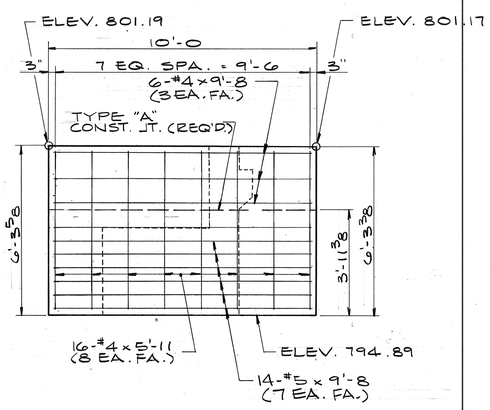

WINGWALL "B"

WINGWALL DETAILS - BENT NO. 1

SCALE : 3/8" = 1'-0

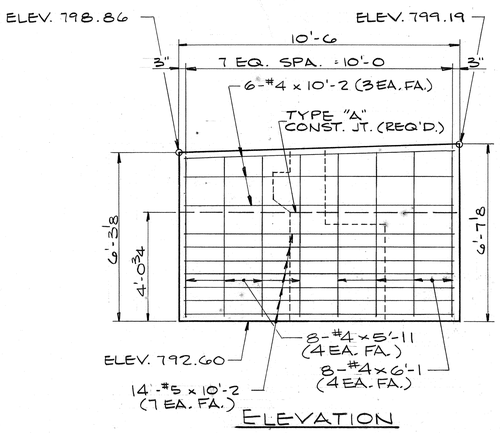

ELEVATION

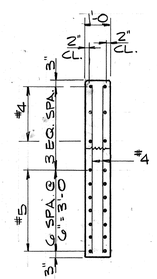

TYPICAL SECTION

WINGWALL "C" DETAILS - BENT NO. 4

SCALE : 3/8" = 1'-0

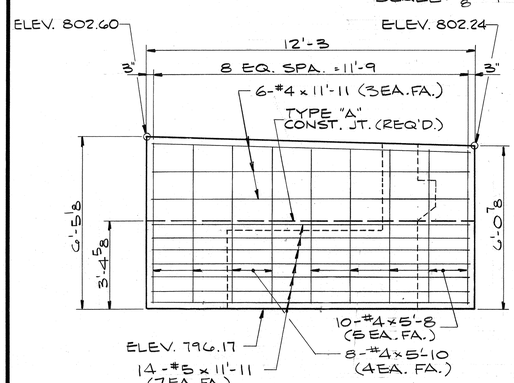

ELEVATION

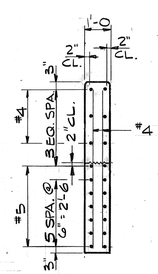

TYPICAL SECTION

WINGWALL "D" DETAILS - BENT NO. 4

SCALE : 3/8" = 1'-0

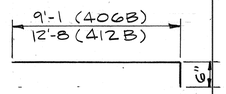

401B x 8'-11
409B x 9'-1

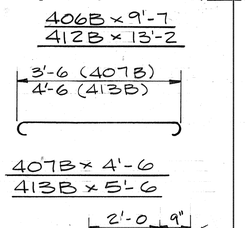

402B x 3'-11

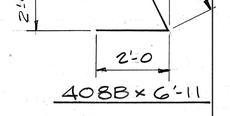

403B x 4'-1

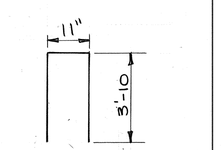

404B x 9'-4

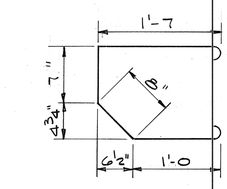

405B x 4'-1

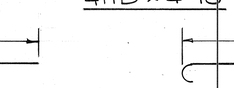

802B x 25'-3

406B x 9'-7
412B x 13'-2

407B x 4'-6
413B x 5'-6

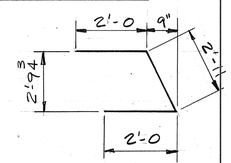

408B x 6'-11

410B x 8'-7

411B x 4'-10

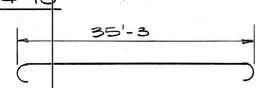

801B x 37'-1

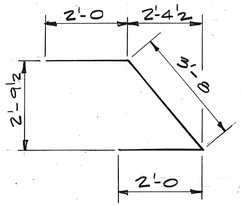

414B x 7'-8

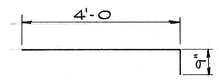

601B x 4'-9

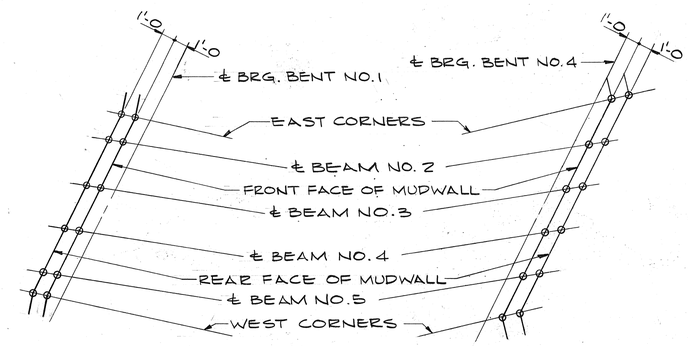

MUDWALL ELEVATIONS

NO SCALE

TABLE OF MUDWALL ELEVATIONS						
LOCATION	E. CRNR	BM. NO. 2	BM. NO. 3	BM. NO. 4	BM. NO. 5	W. CRNR.
R.F. MUDWALL - BENT NO. 1	801.34	801.65	802.20	802.76	803.31	803.58
F.F. MUDWALL - BENT NO. 1	801.34	801.65	802.20	802.76	803.31	803.59
F.F. MUDWALL - BENT NO. 4	799.21	799.83	800.41	800.98	801.56	802.10
R.F. MUDWALL - BENT NO. 4	799.16	799.80	800.38	800.96	801.53	802.06

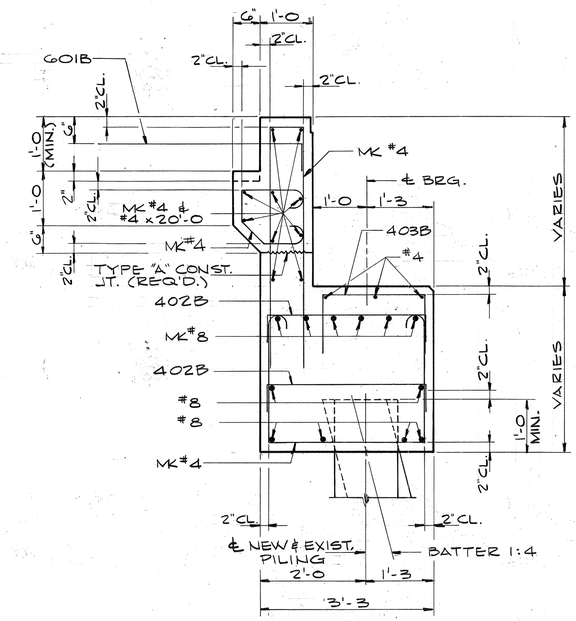

SECTION "A-A"

SCALE : 3/4" = 1'-0

END BENT DETAILS
INDIANA DEPARTMENT OF TRANSPORTATION

SCALE:- AS NOTED

DATE:- July 7 1982

SENIOR DESIGNER

DRAWING:- S12 OF S19 SHEET:- 19 OF 59

PROJECT:- IR-465-4(STATION:-

BRIDGE CONTRACT NO. B-19705

BRIDGE FILE:- I-465-154-4649DRB

L. D. TAYLOR, JR. REGISTERED No. 6899 STATE OF INDIANA PROFESSIONAL ENGINEER

DESIGNED MP	C'K'D TS		
DRAWN SGT	C'K'D LS		
TRACED	C'K'D		

SF-22317

TP101

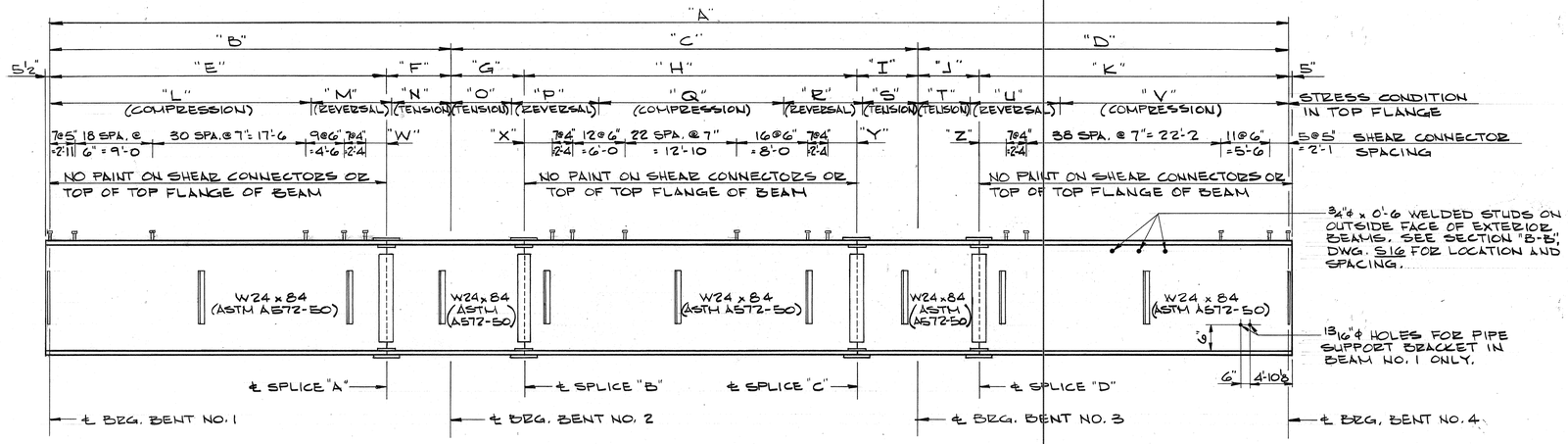

BEAM ELEVATION
NO SCALE

NOTE: ALL DIMENSIONS HORIZONTAL AND ALONG BEAM CHORDS.

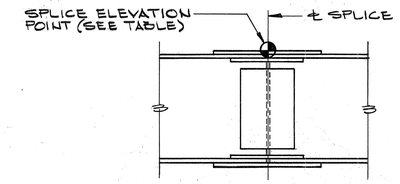

SPLICE ELEVATION DETAIL
NO SCALE

BEAM NO.	1	2	3	4	5	6
SPLICE "A" ELEV.	800.615	800.955	801.510	802.065	802.615	802.980
SPLICE "B" ELEV.	800.475	800.835	801.390	801.945	802.500	802.885
SPLICE "C" ELEV.	799.890	800.330	800.895	801.455	802.015	802.470
SPLICE "D" ELEV.	799.605	800.065	800.630	801.195	801.760	802.230

SPLICE ELEVATION TABLE

NOTE:
SPLICE ELEVATIONS ARE WITH FALSEWORK REMOVED AND CARRYING STEEL DEADLOAD ONLY. TOP OF BEAM SPLICE PLATE SHALL BE ADJUSTED TO THE ABOVE ELEVATIONS BEFORE BOLTING FIELD SPLICES.

	"A"	"B"	"C"	"D"	"E"	"F"	"G"	"H"	"I"	"J"	"K"	"L"	"M"	"N"	"O"	"P"	"Q"	"R"	"S"	"T"	"U"	"V"	W	"X"	"Y"	"Z"
BEAM LINE NO. 1	143'-1 9/16	46'-3 1/8	53'-8 15/16	43'-1 1/2	38'-8 7/16	7'-6 11/16	8'-3 3/4	38'-4 7/16	7'-0 3/4	7'-0 3/4	36'-0 3/4	30'-3 1/8	9'-3	6'-9	7'-0	10'-0	21'-5 15/16	9'-0	6'-3	6'-0	10'-3	26'-10 1/2	2'-5 7/16	3'-5 5/8	3'-4 13/16	3'-11 3/4
BEAM LINE NO. 2	141'-5 13/16	46'-0 3/8	53'-2 1/4	42'-3 3/16	38'-6 3/8	7'-6	8'-3	37'-11 1/4	7'-0	7'-0	35'-3 3/16	28'-9 3/8	11'-9	5'-6	6'-3	12'-0	18'-8 1/4	11'-0	5'-3	5'-0	12'-9	24'-6 3/16	2'-3 3/8	3'-3	3'-2 1/4	3'-2 9/16
BEAM LINE NO. 3	141'-5 13/16	46'-0 3/8	53'-2 1/4	42'-3 3/16	38'-6 3/8	7'-6	8'-3	37'-11 1/4	7'-0	7'-0	35'-3 3/16	29'-0 3/8	11'-3	5'-9	6'-3	11'-3	19'-8 1/4	10'-6	5'-6	5'-9	12'-0	24'-6 3/16	2'-3 3/8	3'-3	3'-2 1/4	3'-2 9/16
BEAM LINE NO. 4	141'-5 13/16	46'-0 3/8	53'-2 1/4	42'-3 3/16	38'-6 3/8	7'-6	8'-3	37'-11 1/4	7'-0	7'-0	35'-3 3/16	29'-0 3/8	11'-3	5'-9	6'-3	11'-3	19'-8 1/4	10'-6	5'-6	5'-9	12'-0	24'-6 3/16	2'-3 3/8	3'-3	3'-2 1/4	3'-2 9/16
BEAM LINE NO. 5	141'-5 13/16	46'-0 3/8	53'-2 1/4	42'-3 3/16	38'-6 3/8	7'-6	8'-3	37'-11 1/4	7'-0	7'-0	35'-3 3/16	28'-9 3/8	11'-9	5'-6	6'-3	12'-0	18'-8 1/4	11'-0	5'-3	5'-0	12'-9	24'-6 3/16	2'-3 3/8	3'-3	3'-2 1/4	3'-2 9/16
BEAM LINE NO. 6	140'-1 3/16	45'-9 7/8	52'-8 5/8	41'-6 11/16	38'-4 7/16	7'-5 7/16	8'-2 5/16	37'-6 5/8	6'-11 11/16	6'-11 11/16	34'-7	30'-0 7/8	9'-3	6'-6	6'-3	9'-6	22'-5 5/8	8'-3	6'-3	5'-6	10'-0	26'-0 11/16	2'-1 7/16	3'-0 11/16	2'-11 15/16	2'-6

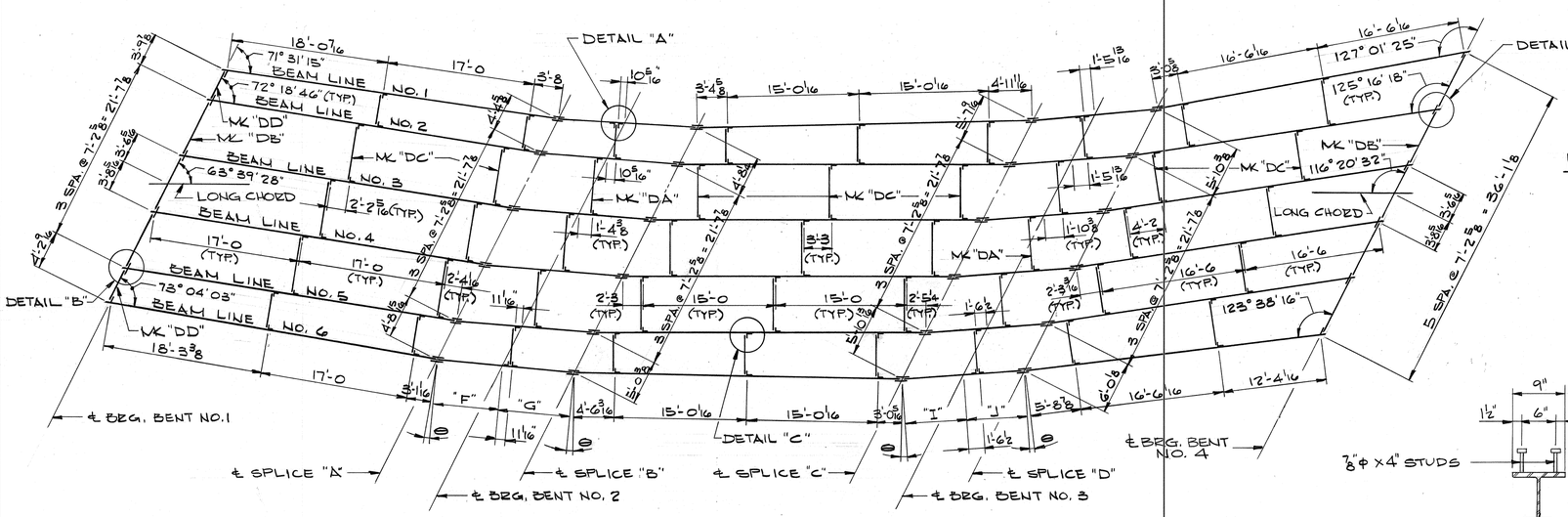

FRAMING PLAN
NO SCALE

NOTE:
ALL DIMENSIONS HORIZONTAL.
FOR SPLICE DEFLECTION ANGLE (θ), SEE DWG. S14.

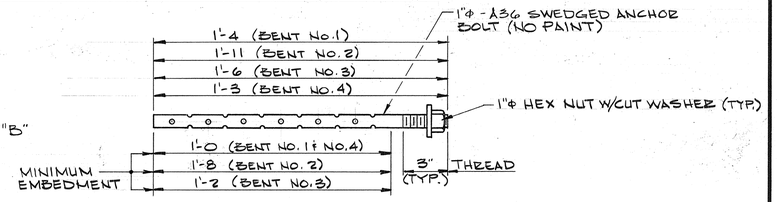

SWEDGED ANCHOR BOLT DETAIL
NO SCALE

NOTE: THE WEIGHT OF SWEDGED ANCHOR BOLTS ARE NOT INCLUDED IN THE ESTIMATED WEIGHT OF STRUCTURAL STEEL. SWEDGED ANCHOR BOLTS TO BE FURNISHED WITH AND INCLUDED IN THE COST OF STRUCTURAL STEEL.

NOTES:
1. ALL SHIM PLATES TO BE ½" THICKNESS.
2. ALL STRUCTURAL STEEL TO BE ASTM A36 UNLESS NOTED OTHERWISE.
3. FOR ADDITIONAL DETAILS, SEE DWG. S14.
4. THE WEIGHT OF HIGH STRENGTH BOLTS ARE NOT INCLUDED IN THE ESTIMATED WEIGHT OF STRUCTURAL STEEL. THE COST OF THESE BOLTS SHALL BE INCLUDED IN THE COST OF STRUCTURAL STEEL.
5. ESTIMATED WEIGHT OF STRUCTURAL STEEL = 86,985 LBS. (INCLUDES 72,647 LBS. FOR ASTM A572-50)

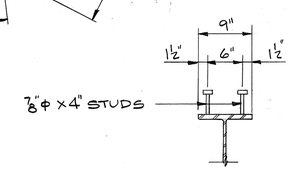

TYPICAL COMPOSITE BEAM
SCALE: 1" = 1'-0

STRUCTURAL STEEL DETAILS
INDIANA DEPARTMENT OF TRANSPORTATION

SCALE:— AS NOTED

DATE:- July 7, 1992

L. D. Taylor
SENIOR DESIGNER

L. D. TAYLOR, JR. REGISTERED No. 6899 STATE OF INDIANA PROFESSIONAL ENGINEER

DRAWING: S13 OF S19 SHEET:- 20 OF 59
PROJECT:- IR - 465 - 4( ) STATION:—
BRIDGE CONTRACT NO. B-19705
BRIDGE FILE:- I - 465 - 154 - 4649DRB

DESIGNED	TSS	C'K'D	MP
DRAWN	SF	C'K'D	LS
TRACED		C'K'D	

SF-22317

TP101

NOTE:
ALL SPLICE PLATES SHALL BE ASTM A572-50

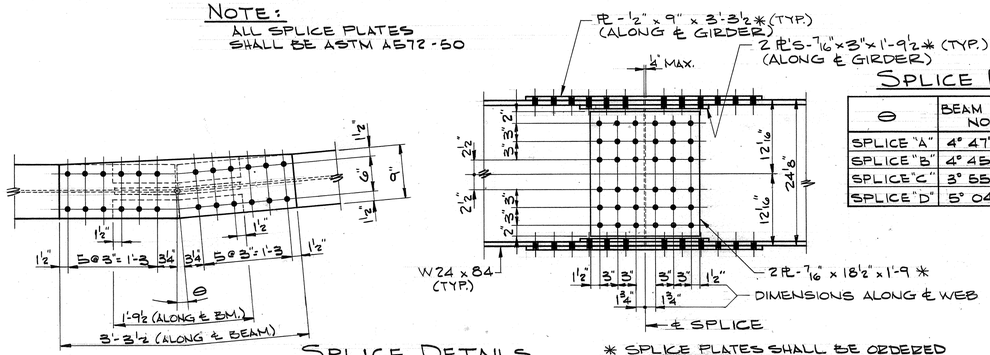

SPLICE DETAILS
SCALE: 1" = 1'-0

* SPLICE PLATES SHALL BE ORDERED WITH SUFFICIENT ADDITIONAL WIDTH AND LENGTH TO PROVIDE FOR DEFLECTION ANGLE GEOMETRY.

SPLICE DEFLECTION TABLE

θ	BEAM LINE NO. 1	BEAM LINE NO. 2 THRU NO. 5	BEAM LINE NO. 6
SPLICE "A"	4° 47' 09"	4° 33' 48"	4° 21' 14"
SPLICE "B"	4° 45' 23"	4° 30' 48"	4° 17' 14"
SPLICE "C"	3° 55' 39"	4° 21' 58"	5° 10' 40"
SPLICE "D"	5° 04' 29"	4° 08' 30"	2° 53' 11"

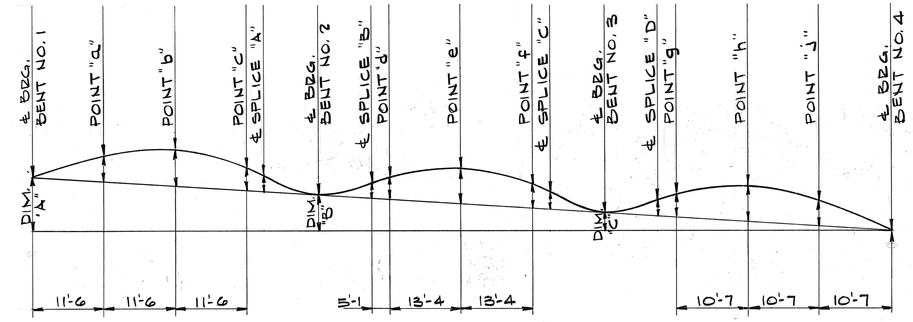

NO LOAD CAMBER AND REAMING DIAGRAM
NO SCALE

NOTE: ALL DIMENSIONS HORIZONTAL AND ALONG BEAM CHORDS.

NOTE: FOR BLOCKING DIMENSIONS "A", "B" AND "C", SEE TABLE BELOW.

TABLE OF CAMBERS (INCHES)

	℄ BRG. BENT NO. 1	POINT "a"	POINT "b"	POINT "c"	℄ SPLICE "A"	℄ BRG. BENT NO. 2	℄ SPLICE "B"	POINT "d"	POINT "e"	POINT "f"	℄ SPLICE "C"	℄ BRG. BENT NO. 3	℄ SPLICE "D"	POINT "g"	POINT "h"	POINT "j"	℄ BRG. BENT NO. 4
STEEL DEAD LOAD	0	1/16"	1/16"	0	0	0	1/8"	0	1/16"	0	0	0	1/16"	0	1/16"	1/16"	0
NON-COMP. DEAD LOAD	0	5/16"	3/8"	1/4"	1/8"	0	1/8"	3/16"	5/16"	3/16"	1/16"	0	1/16"	3/16"	5/16"	1/4"	0
COMPOSITE DEAD LOAD	0	0	1/16"	0	0	0	0	1/16"	1/16"	1/16"	0	0	0	0	0	0	0
SUB-TOTAL	0	3/8"	1/2"	1/4"	1/8"	0	1/8"	1/4"	7/16"	1/4"	1/16"	0	1/16"	3/16"	3/8"	5/16"	0
VERTICAL CURVE CORR.	0	1/8"	1/4"	3/8"	7/16"	0	9/16"	1/2"	1/2"	1/2"	9/16"	0	3/8"	5/16"	3/16"	1/16"	0
TOTAL CAMBER	0	1/2"	3/4"	5/8"	9/16"	0	11/16"	3/4"	15/16"	3/4"	5/8"	0	7/16"	1/2"	9/16"	3/8"	0

BLOCKING DIMENSIONS

LOCATION	DIMENSION "A"	DIMENSION "B"	DIMENSION "C"
BEAM LINE NO. 1	2'-1 1/16	1'-11 1/8	1'-1 1/2
BEAM LINE NO. 2	1'-9 1/2	1'-8 1/4	11 7/8"
BEAM LINE NO. 3	1'-9 3/16	1'-7 15/16	11 11/16"
BEAM LINE NO. 4	1'-8 7/8	1'-7 5/8	11 1/2"
BEAM LINE NO. 5	1'-8 11/16	1'-7 3/8	11 3/8"
BEAM LINE NO. 6	1'-5 3/4	1'-5 1/8	10 1/8"

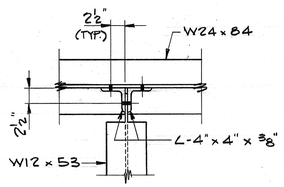

DETAIL "A"
SCALE: 1" = 1'-0

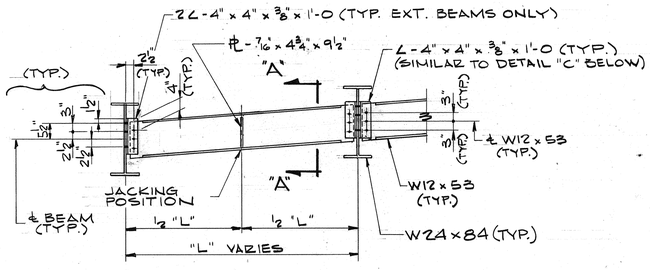

TYPICAL DIAPHRAGM MK "DA"
SCALE: 1/2" = 1'-0

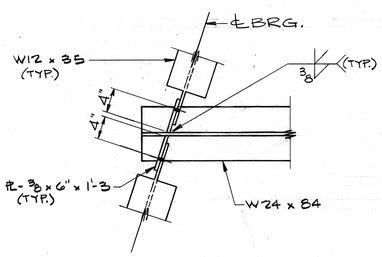

DETAIL "B"
SCALE: 1" = 1'-0

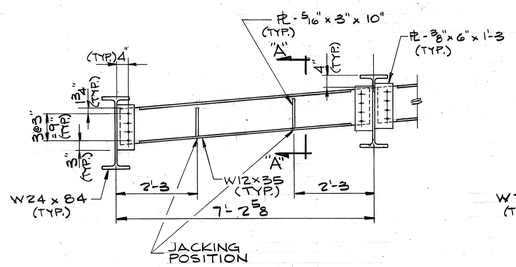

TYPICAL DIAPHRAGM MK "DB"
SCALE: 1/2" = 1'-0

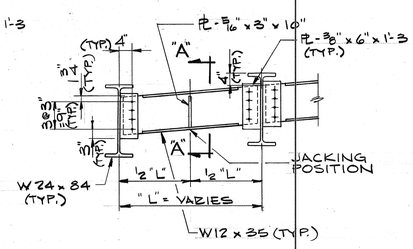

TYPICAL DIAPHRAGM MK "DD"
SCALE: 1/2" = 1'-0

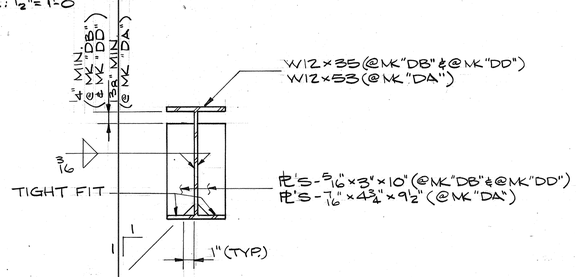

SECTION "A-A"
SCALE: 1 1/2" = 1'-0

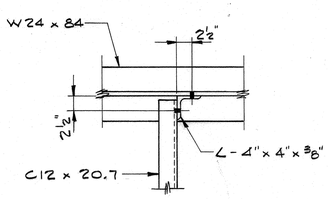

DETAIL "C"
SCALE: 1" = 1'-0

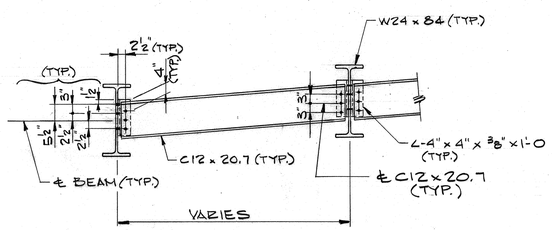

TYPICAL DIAPHRAGM MK "DC"
SCALE: 1/2" = 1'-0

NOTES:
1. FOR NOTES, SEE DWG. S13.

STRUCTURAL STEEL DETAILS
INDIANA DEPARTMENT OF TRANSPORTATION

SCALE:—AS NOTED DATE:- July 7 1992
SENIOR DESIGNER L. D. Taylor Jr.

L. D. TAYLOR, JR. REGISTERED No. 6899 STATE OF INDIANA PROFESSIONAL ENGINEER

DRAWING:- S14 OF S19 SHEET:- 21 OF 59
PROJECT:- IR-465-4( ) STATION:—
BRIDGE CONTRACT NO. B-19705
BRIDGE FILE:- I-465-154-4649DRB

DESIGNED MP	C'K'D TS		
DRAWN SF	C'K'D LG		
TRACED	C'K'D		

SF-22317

TP101

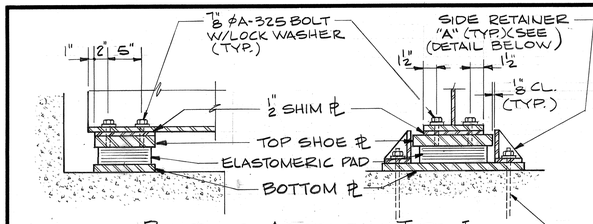

BEARING ASSEMBLY TYPE I
BENT NO. 1
NO SCALE

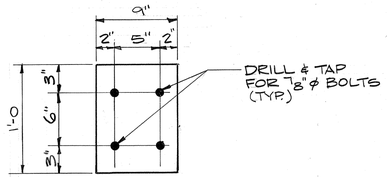

TOP SHOE PLATE
SCALE: 1 1/2" = 1'-0

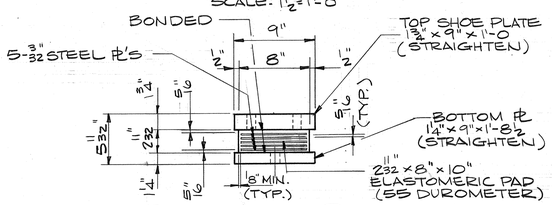

ELASTOMERIC BEARING
SCALE: 1 1/2" = 1'-0

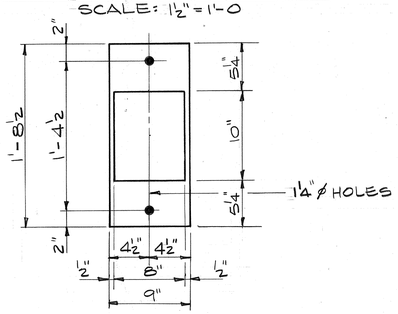

BOTTOM PLATE
SCALE: 1 1/2" = 1'-0

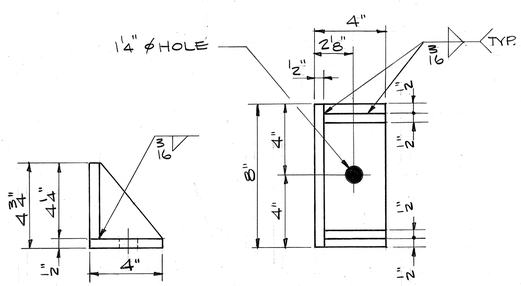

SIDE RETAINER "A" DETAIL
NO SCALE

BEARING ASSEMBLY TYPE I DETAILS
BENT NO. 1

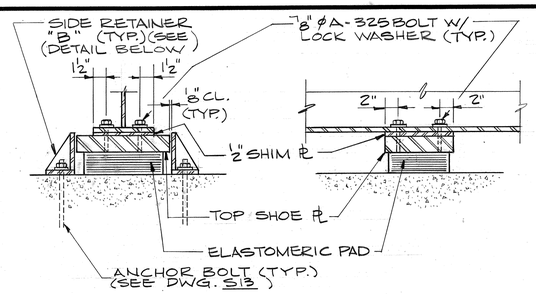

BEARING ASSEMBLY TYPE I
BENT NO. 2
NO SCALE

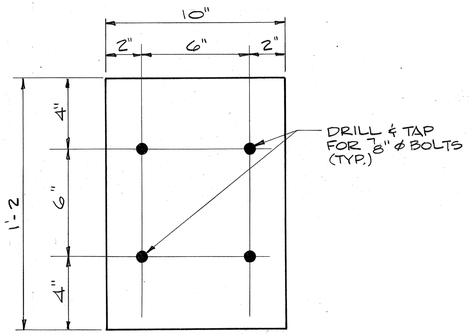

TOP SHOE PLATE
SCALE: 3" = 1'-0

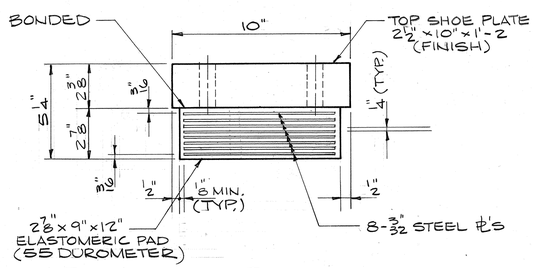

ELASTOMERIC BEARING
SCALE: 3" = 1'-0

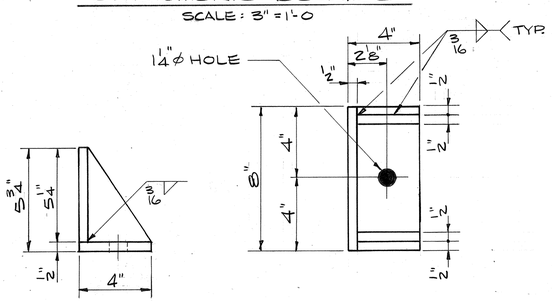

SIDE RETAINER "B" DETAIL
NO SCALE

BEARING ASSEMBLY TYPE I DETAILS
BENT NO. 2

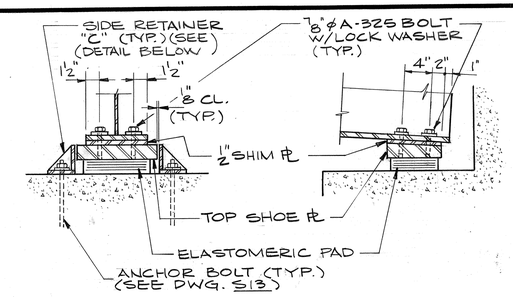

BEARING ASSEMBLY TYPE I
BENT NO. 4
NO SCALE

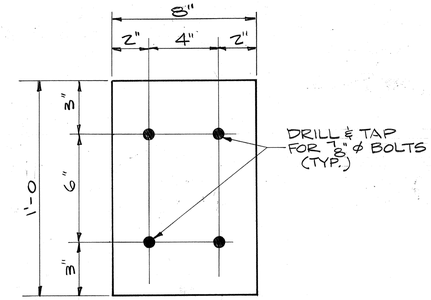

TOP SHOE PLATE
SCALE: 3" = 1'-0

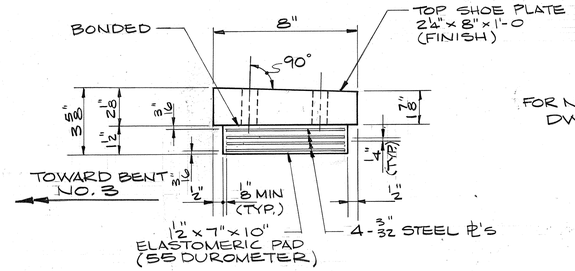

ELASTOMERIC BEARING
SCALE: 3" = 1'-0

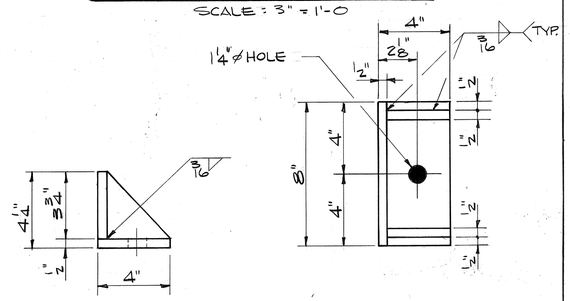

SIDE RETAINER "C" DETAIL
NO SCALE

BEARING ASSEMBLY TYPE I DETAILS
BENT NO. 4

FOR NOTES, SEE DWG. S13.

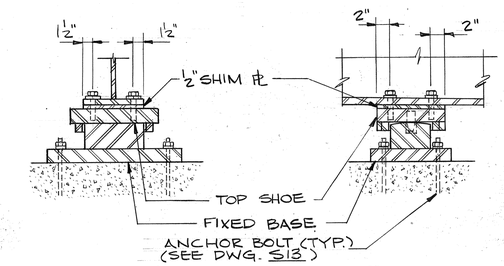

FIXED BEARING ASSEMBLY
BENT NO. 3
NO SCALE

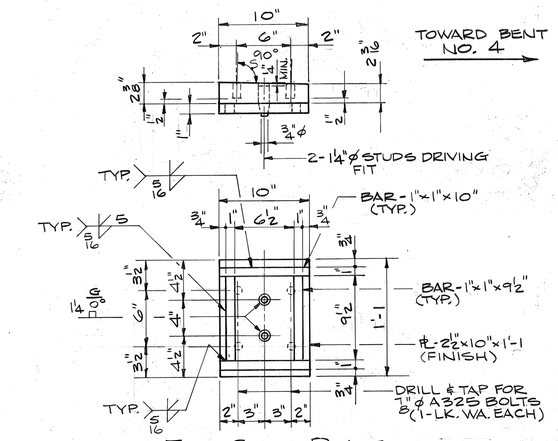

TOP SHOE PLATE
SCALE: 1 1/2" = 1'-0

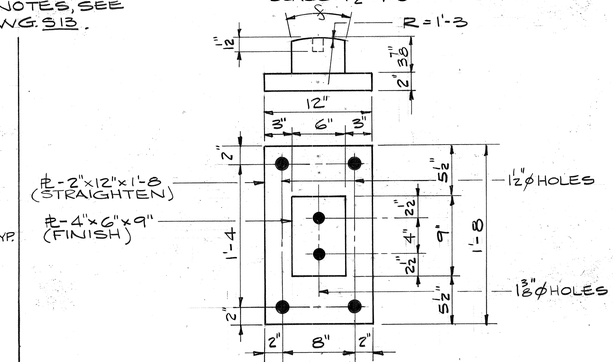

FIXED BASE
SCALE: 1 1/2" = 1'-0

FIXED BEARING DETAIL BENT NO. 3

BEARING DETAILS
INDIANA DEPARTMENT OF TRANSPORTATION

SCALE:—AS NOTED DATE:- July 7 1992
SENIOR DESIGNER

DRAWING:- S15 OF S19 SHEET:- 22 OF 59
PROJECT:-IR-465-4(STATION:—
BRIDGE CONTRACT NO. B-19705
BRIDGE FILE:-I-465-154-4649 DRB

L. D. TAYLOR, JR. REGISTERED No. 6899 STATE OF INDIANA PROFESSIONAL ENGINEER

DESIGNED MP	C'K'D TSS		
DRAWN MM	C'K'D LS		
TRACED	C'K'D	SF-22317	

TP101

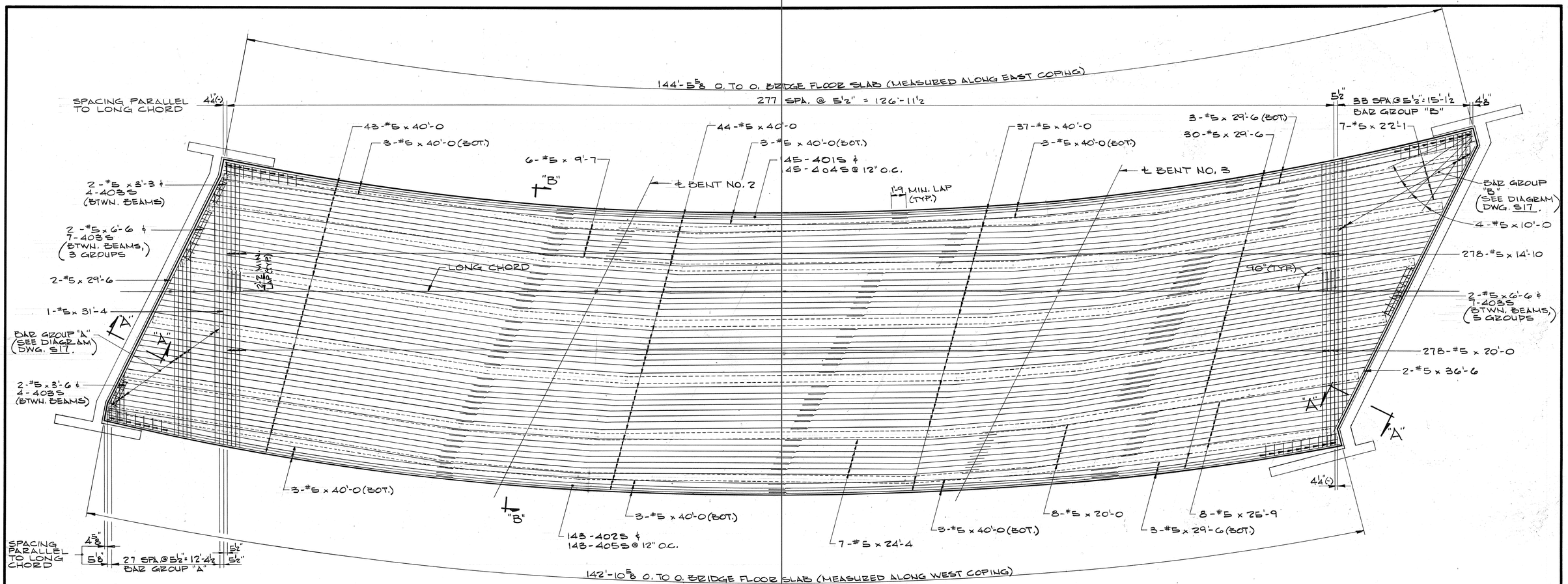

SUPERSTRUCTURE PLAN

(SHOWING BOTTOM SLAB REINFORCING STEEL)

SCALE: 3/16" = 1'-0

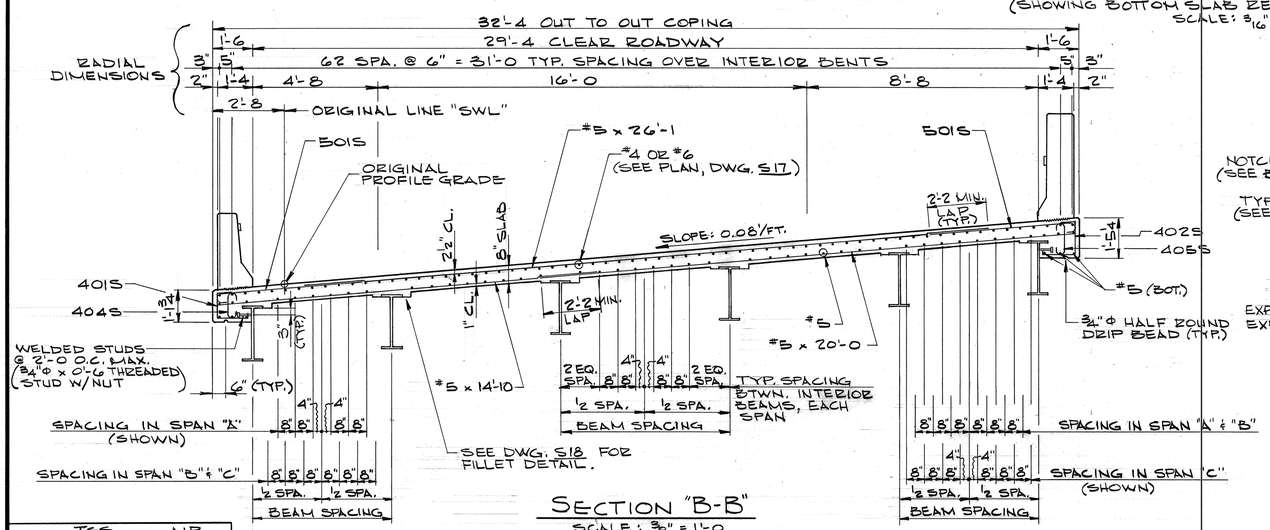

SECTION "B-B"

SCALE: 3/8" = 1'-0

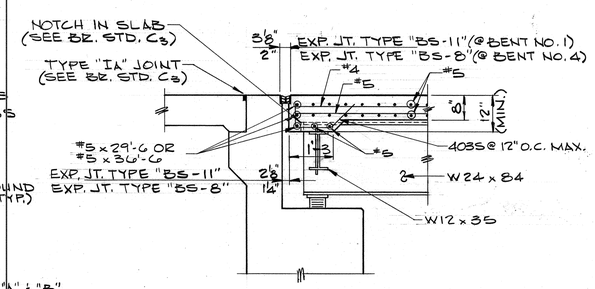

SECTION "A-A"

SCALE: 1/2" = 1'-0

NOTES:

1. FOR GENERAL NOTES, SEE DWG. S2.
2. FOR ADDITIONAL SECTIONS AND DETAILS, SEE DWG'S. S17 & S18.
3. FOR REINFORCING BAR NOTES, SEE BR. STD. C1.
4. FOR EXPANSION JOINT TYPE "BS-11" & "BS-8" DETAILS AND ADDITIONAL JOINT DETAILS, SEE BR. STD. C3.
5. ALL REINFORCING STEEL IN SUPERSTRUCTURE SLAB AND IN CONCRETE BARRIER RAILING TO BE EPOXY COATED.
6. AFTER STRUCTURAL STEEL HAS BEEN ERECTED, CONCRETE FORMS SHALL NOT BE BLOCKED AGAINST THE EXPANSION END OF STEEL IN MAKING ANY POURS ADJACENT TO STEEL SPANS.
7. THE TOP REINFORCING IN THE DECK SHALL BE SECURELY TIED DOWN TO THE DECK FORMS AND/OR THE BEAMS TO PREVENT LIFTING DURING CONCRETE PLACEMENT.
8. PERMANENT METAL DECK FORMS MAY BE SUBSTITUTED FOR REMOVABLE FORMS AT THIS STRUCTURE.
9. FOR DESIGN DATA, SEE DWG. S2.

SUPERSTRUCTURE

INDIANA DEPARTMENT OF TRANSPORTATION

SCALE:—AS NOTED

DATE:- July 7 1992

L. D. Taylor
SENIOR DESIGNER

L. D. TAYLOR, JR. REGISTERED No. 6899 STATE OF INDIANA PROFESSIONAL ENGINEER

DRAWING:- S16 OF S19 SHEET:- 23 OF 59

PROJECT:- IR-465-4( ) STATION:—

BRIDGE CONTRACT NO. B-19705

BRIDGE FILE:- I-465-154-4649 DRB

DESIGNED	TSS	C'K'D	MP
DRAWN	SF	C'K'D	LS
TRACED		C'K'D	

SF-22317

TP101

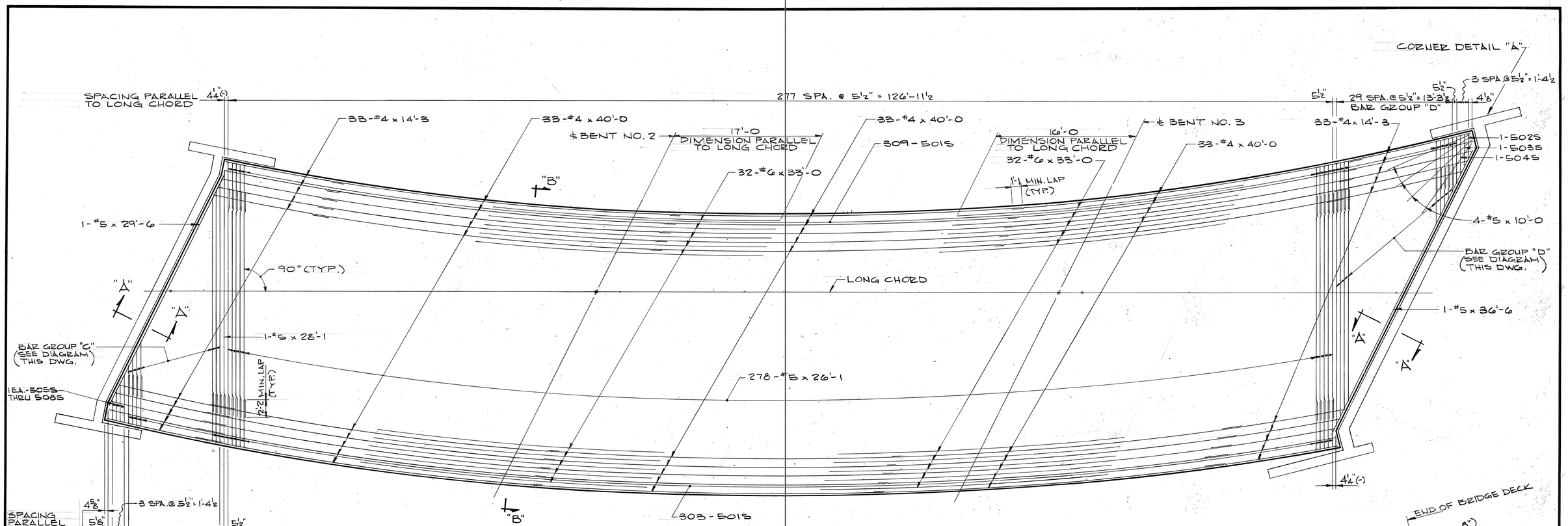

SUPERSTRUCTURE PLAN
(SHOWING TOP SLAB REINFORCING STEEL)
SCALE: 3/16" = 1'-0

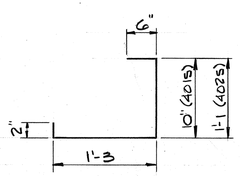

4015 x 2'-9
4025 x 3'-0

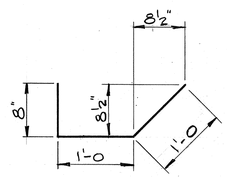

4035 x 2'-8

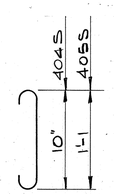

4045 x 1'-10
4055 x 2'-1

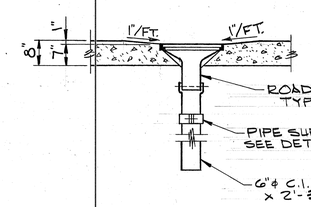

SECTION "C-C"
SCALE: ½" = 1'-0

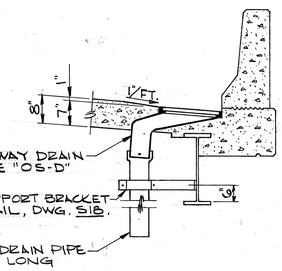

SECTION "D-D"
SCALE: ½" = 1'-0

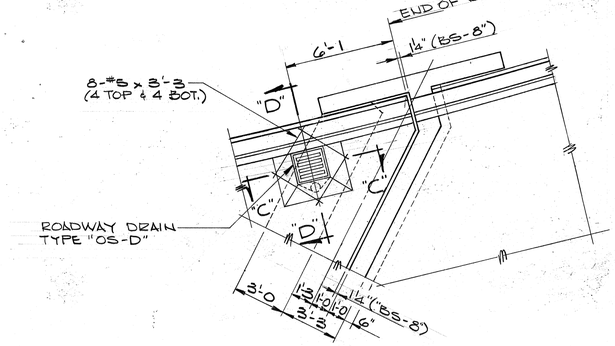

CORNER DETAIL "A"
SCALE: ¼" = 1'-0

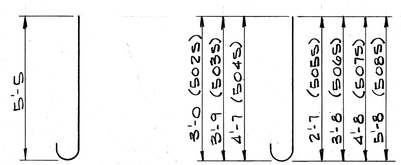

5015 x 6'-0

5025	x 3'-7
5035	x 4'-4
5045	x 5'-2
5055	x 3'-2
5065	x 4'-3
5075	x 5'-3
5085	x 6'-3

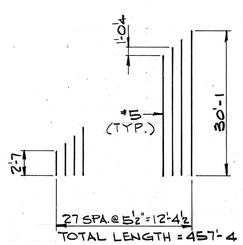

BAR GROUP "A"

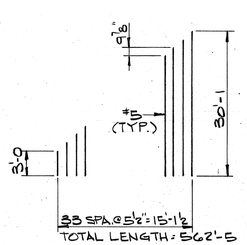

BAR GROUP "B"

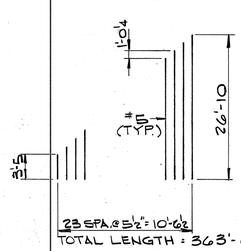

BAR GROUP "C"

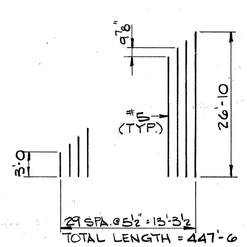

BAR GROUP "D"

NOTES:
1. FOR NOTES, SECTIONS "A-A" & "B-B", SEE DWG. S16.

SUPERSTRUCTURE
INDIANA DEPARTMENT OF TRANSPORTATION

SCALE:—AS NOTED

DATE:- July 7 1992
L. D. Taylor
SENIOR DESIGNER

L. D. TAYLOR, JR. REGISTERED No. 6899 STATE OF INDIANA PROFESSIONAL ENGINEER

DRAWING:- S17 OF S19 SHEET:- 24 OF 59
PROJECT:- IR-465-4( ) STATION:—
BRIDGE CONTRACT NO. B-19705
BRIDGE FILE:- I-465-154-4649 DRB

DESIGNED	TSS	C'K'D	MP
DRAWN	SF	C'K'D	LS
TRACED		C'K'D	

SF-22317

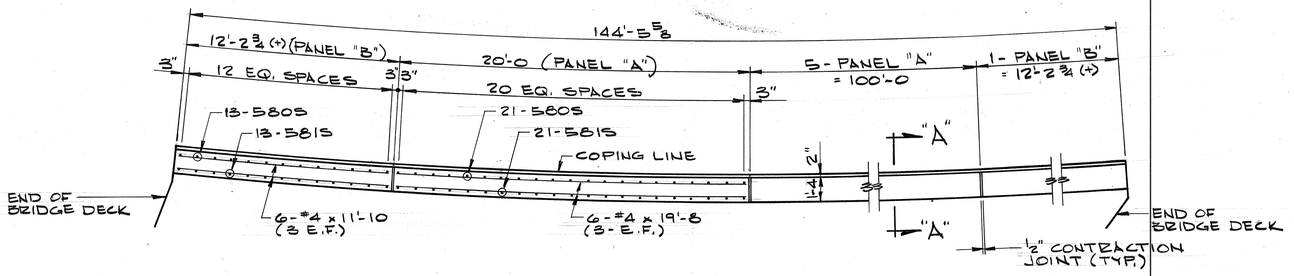

CONCRETE BARRIER RAILING - ALONG EAST COPING

SCALE: 1/4" = 1'-0

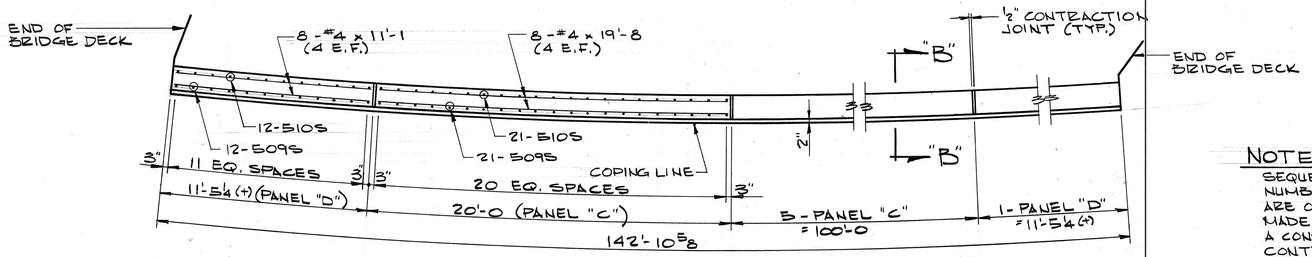

CONCRETE BARRIER RAILING - ALONG WEST COPING

SCALE: 1/4" = 1'-0

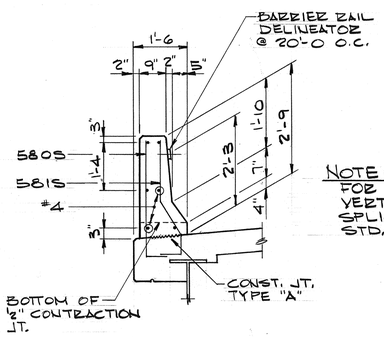

NOTE:
FOR OPTIONAL RAILING VERT. REINFORCING SPLICE, SEE BR. STD. C3.

SECTION "A-A"

SCALE: 1/2" = 1'-0

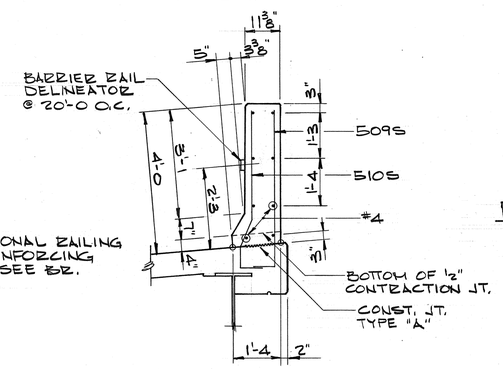

SECTION "B-B"

SCALE: 1/2" = 1'-0

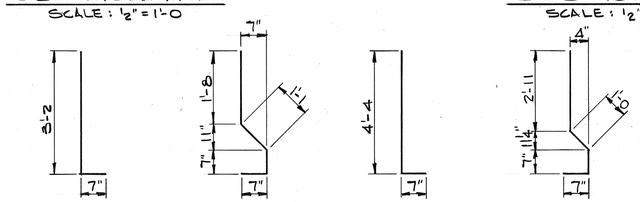

5805 x 3'-9 | 5815 x 3'-11 | 5095 x 4'-11 | 5105 x 5'-1

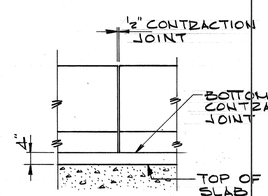

RAILING CONTRACTION JOINT DETAIL

NO SCALE

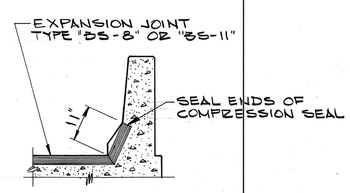

EXP. JT. TYPE "BS-8" & "BS-11" TREATMENT @ BARRIER RAILING

NO SCALE

NOTES:
1. FOR NOTES, SEE DWG. S16.

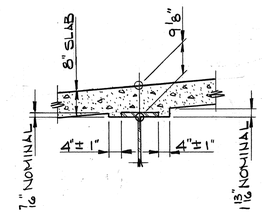

FILLET DETAIL

NO SCALE

NOTE:
SEQUENCE OF POURS TO BE MADE IN THE ORDER OF POUR NUMBERS. ALL SUPERSTRUCTURE CONSTRUCTION JOINTS ARE OPTIONAL, EXCEPT AS NOTED, AND POURS MAY BE MADE CONTINUOUS PROVIDED THE POUR TERMINATES AT A CONSTRUCTION JOINT INDICATED ON THE PLANS. THE CONTRACTOR MAY CHANGE THE WIDTH OF POURS, SEQUENCE OF POURS OR LOCATION OF CONSTRUCTION JOINTS SUBJECT TO THE APPROVAL OF THE ENGINEER.

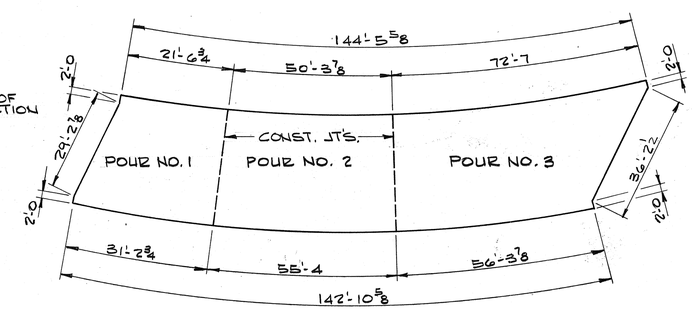

SCHEDULE OF POURS

NO SCALE

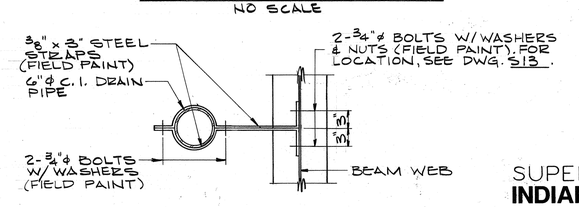

PIPE SUPPORT BRACKET DETAIL

NO SCALE

NOTE:
PIPE SUPPORT BRACKET TO BE INCLUDED IN THE COST OF 6"φ C.I. DRAIN PIPE.

CLASS "C" CONCRETE	
POUR NO. 1	24.2 C.Y.
POUR NO. 2	47.4 C.Y.
POUR NO. 3	59.0 C.Y.
TOTAL CLASS "C"	
CONCRETE IN SLAB	130.6 C.Y.
TOTAL CLASS "C"	
CONCRETE RAILING	35.4 C.Y.
MISCELLANEOUS	
SURFACE SEAL	7,095 S.F.
BARRIER DELINEATORS	16 EA.
1-ROADWAY DRAIN	
TYPE "OS-D"	322#
1-6" φ C.I. DRAIN PIPE	
x 2'-3 (EXTRA HEAVY)	46#
EXP. JT. TYPE "BS-8"	39.1 L.F.
EXP. JT. TYPE "BS-11"	32.1 L.F.
TYPE I BEARING ASSMBY.	
@ BENT NO. 1	6 EACH
TYPE I BEARING ASSMBY.	
@ BENT NO. 2	6 EACH
TYPE I BEARING ASSMBY.	
@ BENT NO. 4	6 EACH

BILL OF MATERIALS

MK. OR SIZE	NO. PCS.	LENGTH	WEIGHT
#6	64	33'-0	
TOTAL #6			3,172#
5015	612	6'-0	
5025	1	3'-7	
5035	1	4'-4	
5045	1	5'-2	
5055	1	3'-2	
5065	1	4'-3	
5075	1	5'-3	
5085	1	6'-3	
5095	150	4'-11	
5105	150	5'-1	
5805	152	3'-9	
5815	152	3'-11	
#5	1	457'-4	GROUP "A"
#5	1	562'-5	GROUP "B"
#5	1	363'-0	GROUP "C"
#5	1	447'-6	GROUP "D"
#5	142	40'-0	
#5	3	36'-6	
#5	1	31'-4	
#5	39	29'-6	
#5	1	28'-1	
#5	278	26'-1	
#5	8	25'-9	
#5	7	24'-4	
#5	7	22'-1	
#5	286	20'-0	
#5	278	14'-10	
#5	8	10'-0	
#5	6	9'-7	
#5	16	6'-6	
#5	2	3'-6	
#5	10	3'-3	
TOTAL #5			34,530#
4015	145	2'-9	
4025	143	3'-0	
4035	64	2'-8	
4045	145	1'-10	
4055	143	2'-1	
#4	99	40'-0	
#4	84	19'-8	
#4	66	14'-3	
#4	12	11'-10	
#4	16	11'-1	
TOTAL #4			5,634#
TOTAL EPOXY COATED REINF.			43,336#

SUPERSTRUCTURE DETAILS
INDIANA DEPARTMENT OF TRANSPORTATION

SCALE:- AS NOTED

DATE:- July 7 1982

SENIOR DESIGNER

L. D. TAYLOR, JR. REGISTERED No. 6899 STATE OF INDIANA PROFESSIONAL ENGINEER

DRAWING:- S18 OF S19 SHEET:- 25 OF 59

PROJECT:- IR - 465 - 4( ) STATION:-

BRIDGE CONTRACT NO. B-19705

BRIDGE FILE:- I - 465 - 154 - 4649 DRB

DESIGNED	TSS	C'K'D	MP
DRAWN	S.F.	C'K'D	LS
TRACED		C'K'D	

SF-22317

TP101

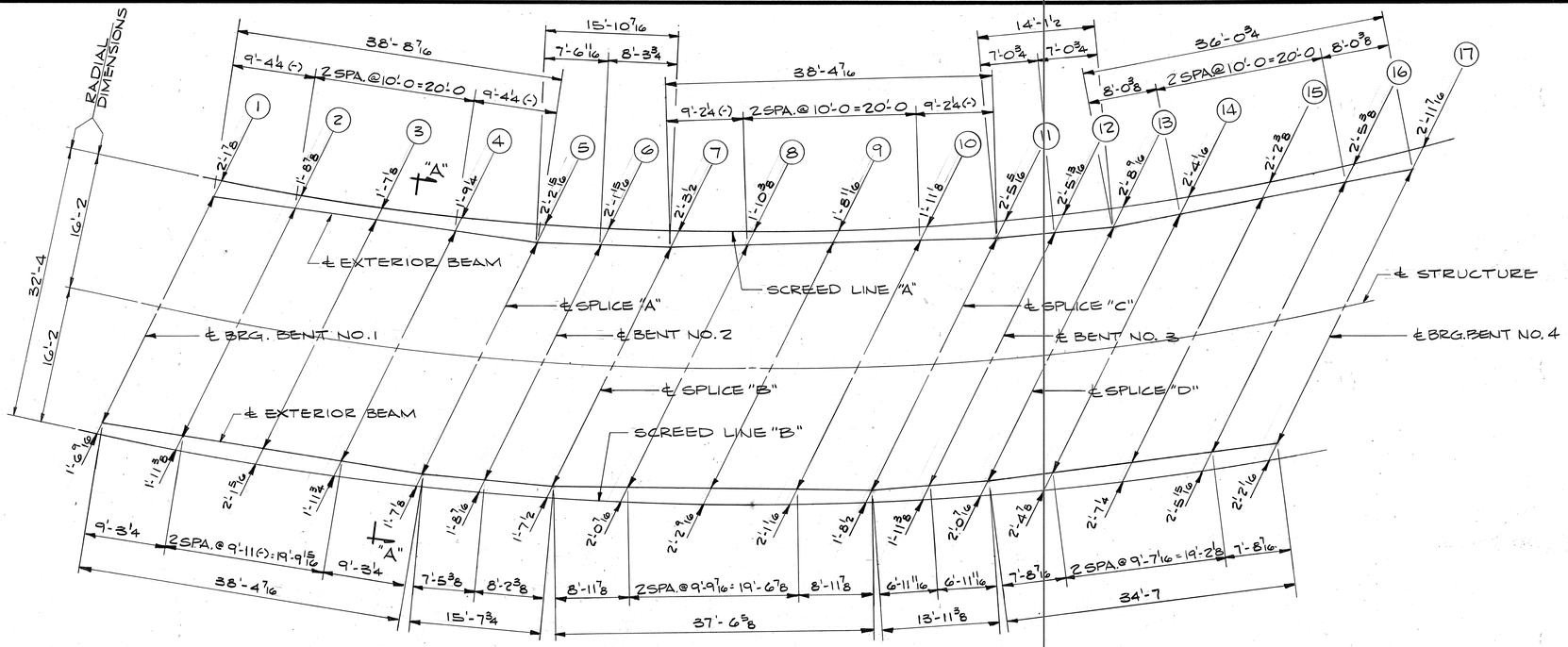

SCREED PLAN
NO SCALE

GENERAL PROCEDURE

1. AFTER ALL STRUCTURAL STEEL HAS BEEN ERECTED, TAKE ELEVATIONS AT ALL SCREED POINTS ON TOP OF ADJACENT BEAM. ENTER THESE ELEVATIONS IN "TABLE OF ELEVATIONS", THIS DWG. SUBTRACT THESE ELEVATIONS FROM THE TABULATED ELEVATIONS AND USE THE RESULTING DIMENSION AS THE HEIGHT FOR SETTING THE SCREED OR COPING FORMS ABOVE THAT POINT ON THE BEAM. THIS DIMENSION REMAINS CONSTANT REGARDLESS OF HOW MUCH OR IN WHAT ORDER THE CONCRETE IS POURED. DO NOT SET SCREED OR COPING FORMS BY LEVELING.
2. NO CONCRETE IN THE FLOOR IS TO BE POURED UNTIL THE ABOVE OPERATIONS ARE COMPLETE.
3. SCREED ELEVATIONS FOR ALL BEAM LINES ARE ON FILE WITH THE INDIANA DEPARTMENT OF TRANSPORTATION.

NOTES:

1. "SCREED PLAN" SHOWS LOCATION OF SCREEDS.
2. "TABLE OF ELEVATIONS" SHOWS DATA FOR SETTING SCREED AND COPING FORMS SO THAT THE SLAB AND COPING WILL BE AT FINAL GRADE AFTER ALL CONCRETE HAS BEEN POURED.
3. SEE DWG. S2 FOR GENERAL NOTES.
4. SCREED ELEVATION POINTS ARE PARALLEL TO SKEW.
5. SEE DWG'S. S16, S17 & S18 FOR ADDITIONAL DETAILS.

TABLE OF ELEVATIONS

LINE	LOCATION	1	2	3	4	5	6	7	8	9	10	11	12	13	14	15	16	17
"A"	ELEVATION TOP OF SLAB	801.190	801.220	801.220	801.175	801.100	801.030	800.955	800.860	800.725	800.545	800.350	800.195	800.045	799.865	799.615	799.310	799.030
	ELEVATION TOP OF EXTERIOR BEAM																	
	OFFSET																	
"B"	ELEVATION TOP OF SLAB	803.750	803.805	803.825	803.805	803.755	803.710	803.665	803.610	803.525	803.400	803.260	803.150	803.045	802.925	802.745	802.530	802.330
	ELEVATION TOP OF EXTERIOR BEAM																	
	OFFSET																	

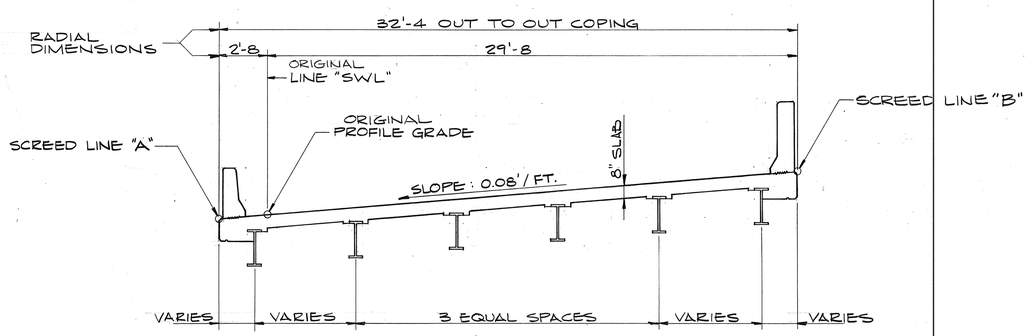

SECTION "A-A"
SCALE : 1/4" = 1'-0

NOTE:
FOR SCREED LOCATIONS, SEE SCREED PLAN THIS DWG.

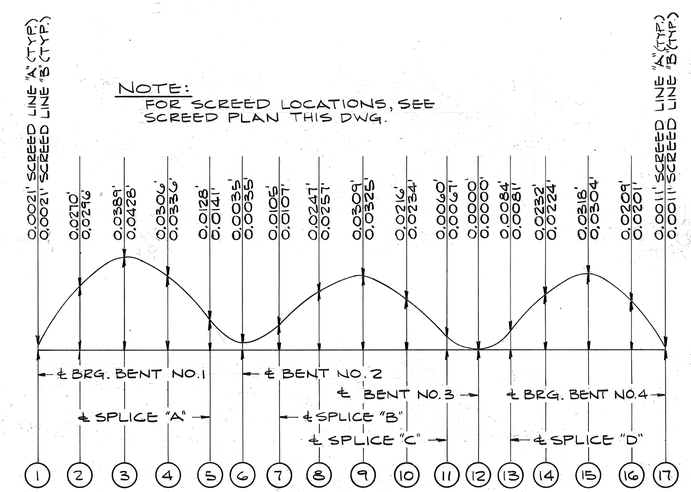

CONCRETE DEAD LOAD DEFLECTIONS
NO SCALE

SCREED DATA
INDIANA DEPARTMENT OF TRANSPORTATION

SCALE:— AS NOTED

DATE:- July 7 1992

L. D. Taylor Jr.
SENIOR DESIGNER

L. D. TAYLOR, JR. REGISTERED No. 6899 STATE OF INDIANA PROFESSIONAL ENGINEER

DRAWING:- S19 OF S19 SHEET:- 26 OF 59
PROJECT:- IR-465-4( ) STATION:—
BRIDGE CONTRACT NO. B-19705
BRIDGE FILE:- I-465-154-4649DRB

DESIGNED	TSS	C'K'D	MP
DRAWN	MLM	C'K'D	LS
TRACED		C'K'D	

SF-22317

TP101

BRIDGE FILE

STRUCTURE QUANTITIES

ITEM	CONCRETE CLASS C SUPERSTR CU. YDS.	CONCRETE CLASS A SUBSTR CU. YDS.	CONCRETE CLASS B ABOVE FTG. CU. YDS.	CONCRETE CLASS B IN FTG. CU. YDS.	STRUCTURAL REMOVAL PORTIONS L. SUM		CONCRETE RAILING CLASS C CU. YDS.	CONCRETE RAILING CLASS C LIN. FT.	REINF. STEEL TOTAL LBS.	STRUCT. STEEL *** LBS.	EPOXY COATED REINF. STEEL LBS.	ANCHOR PLATES MK-AP EACH	PILES EPOXY COATED SHELLS NO.	PILES EPOXY COATED SHELLS LIN. FT.	PILES TREATED TIMBER NO.	PILES TREATED TIMBER LIN. FT.	PILES STEEL ENCASED CONC. 14" NO.	PILES STEEL ENCASED CONC. 14" LIN. FT.	PILES STEEL H BEARING NO.	PILES STEEL H BEARING LIN. FT.	CAST IRON DRAIN PIPE 6" ϕ LBS.	CAST IRON, GRATES, BASINS, & FITTINGS LBS.	RAILING TYPE OR LIN. FT.	EXP. JT. TYPE "BS-8" LIN. FT.	EXP. JT. TYPE "BS-11" LIN. FT.	CONC. STR. MEMBERS BOX BEAMS TYPE SQ. FT.	CONC. STR. MEMBERS I BEAM TYPE LIN. FT.	CONCRETE PAVEMENT REINF. 12" SQ. YD.	BARRIER DELINEATORS EACH	COMPACTED AGGREGATE TYPE "O" TON	REPOINTING MASONRY SQ. FT.	FIELD DRILLED HOLES EACH	SURFACE SEAL * SQ. FT.	FINISHING AND CURING SQ. YD.	BLASTING AND CLEANING SQ. YD.	TYPE I BEARING ASSMBY. EACH	BENCH MARK EACH
SUBSTRUCTURES																																					
BENT NO. 1	5.7	16.5									3,193						1	40															222				
BENT NO. 2		15.9	13.0	5.2					1,723		1,991																					35					
BENT NO. 3		13.6	16.2	5.4					2,336		2,592																					41					
BENT NO. 4	7.1	20.9									3,987						2	80															261				
SUPERSTRUCTURE	130.6						35.4			86,985	43,336										46	322		39.1	32.1				16				7,095			18	
BARRIER RAIL TRANSITIONS							8.0				1,474																						578				
R.C. BRIDGE APPROACH SLABS									4,831		1,298																	196.9		65.6							
MISCELLANEOUS					1																										5						1
Reinf. Steel for Approach Structures																																					
Reinf. Steel for R.C. Bridge Approaches																																					
Reinf. Steel for Lip Gutter, Pvmt., Tapers, etc.																																					
TOTALS	143.4	66.9	29.2	10.6	1		43.4		8,889	86,985	57,871						3	120			46	322		39.1	32.1			196.9	16	65.6	5	76	8,156			18	1

BRIDGE FILE

APPROACH STRUCTURES

STRUCT. NO.	LOCATION	DESCRIPTION SIZE	DESCRIPTION KIND	LENGTH LIN. FT.	CONCR. CL. A IN STRS. CU. YDS.	REINF. STEEL LBS.	PIPE END SEC. EACH		REMARKS
11	13 + 41.5	6"	F.B.C.P.C.S. PIPE	52					
12	14 + 83		INLET TYPE "U"						BELOW ROADWAY DRAIN
		12"	F.B.C.C.S. PIPE	12			1		TYPE "OS-D"
13	14 + 91	6"	F.B.C.P.C.S. PIPE	60					
				TOTALS					Total of Reinforcing Steel Carried to "Structure Quantities"

PAVED SIDE DITCH & SODDING SUMMARY

LT. OR RT.	STATION TO STATION	PAVED SIDE DITCH (LIN. FT.) TYPE	PAY LENGTH	NO. OF LUGS	PAY LENGTH	CUT OFF WALLS	PAY LENGTH	TOTAL PAY LENGTH	SODDING (SQ. YD.) FOR PSD	FOR DITCHES	SHOULDERS	OTHER	TOTAL SOD

* ESTIMATED QUANTITIES

APPROACH TABLE

LOCATION LT/RT	LOCATION STATION	DESCRIPTION	WIDTH FT.	RADII FT.	GRADE %	LENGTH FT.	DIST. BEYOND R/W FT.	EXCAVATION (CYS) CUT	EXCAVATION (CYS) FILL	BITUM. SURFACE #/SQ.YD.	BITUM. SURFACE TONS	BITUM. BINDER #/SQ.YD.	BITUM. BINDER TONS	BITUM. BASE #/SQ.YD.	BITUM. BASE TONS	COMP. AGG. BASE Depth (In)	COMP. AGG. BASE TONS

NOTES:
Weight of Spirals includes weight of 1½ extra turns top and bottom.
Spacers and 1½ turns at laps included in cost of Spiral.
*** The weight of structural steel is approximate only, and it shall be the Contractor's responsibility to determine the weight on which he bases his bid.
For Test Bar Samples See Bridge Standard C1.

REVISIONS

DATE	ITEM

JUNE 1984

SUMMARIZED S.J.F. C'K'D MM
TRACED C'K'D

SF-22332

TP103

BRIDGE SUMMARY

INDIANA DEPARTMENT OF TRANSPORTATION

DATE July 7, 1992

SENIOR DESIGNER

SHEET 27 OF 59

PROJECT: IR - 465 - 4( )
CONTRACT NO: B-19705
BRIDGE FILE: I - 465 - 154 - 4649 DRB

L. D. TAYLOR, JR. REGISTERED No. 6899 STATE OF INDIANA PROFESSIONAL ENGINEER