CHAPTER 602

Project Categories and Pavement Types

Design Memorandum	Revision Date	Sections Affected
20-01	Jan. 2020	Previously 304-6.0 through 8.0
20-15	Sep. 2020	602-1.0, 602-1.03, 602.1.04, Figures 602-1B and 602-1C
21-01	Jan. 2021	Figure 602-3Z
22-02	Jan. 2022	602-2.0
23-02	May. 2023	602-3.02
23-21	Dec. 2023	602-3.02, 602-3.02(01) through 602-3.02(03)
24-03	Apr. 2024	Figure 602-3EE
24-17	Dec. 2024	Fig 602-3A thru 602-3D, 602-3G, 602-3H, and 602-3J
25-08	Mar. 2025	602-2.02
25-10	Apr. 2025	602-3.02
25-16	Aug. 2025	602-2.0

The applicable revision date is noted in brackets next to each affected section heading.

TABLE OF CONTENTS

TABLE OF CONTENTS 2

LIST OF FIGURES 3

602-1.0 PAVEMENT PROJECT CATEGORIES [Rev. Sep. 2020] 5
- 602-1.01 New Alignment 6
- 602-1.02 Pavement Reconstruction 6
- 602-1.03 Pavement Rehabilitation 6
  - 602-1.03(01) Structural Overlay 6
  - 602-1.03(02) PCCP Rubblization and HMA Overlay 6
  - 602-1.03(03) PCCP Cracking and Seating and HMA Overlay 7
  - 602-1.03(04) Unbonded PCCP Overlay over Old PCCP 7
  - 602-1.03(05) Thin PCCP Overlay Bonded to Old Pavement 8
  - 602-1.03(06) Full Depth Pavement Reclamation 8
  - 602-1.03(07) Cold Central Plant Recycling 10
- 602-1.04 Preventive Maintenance 10
  - 602-1.04(01) Mill and Fill Overlay Treatment 10
  - 602-1.04(02) In-Place Recycling [Rev. Sep. 2020] 11
  - 602-1.04(03) Crack Sealing and Filling 12
  - 602-1.04(04) Fog Sealing 12
  - 602-1.04(05) Seal Coat/Chip Seal 12
  - 602-1.04(06) Microsurfacing 13
  - 602-1.04(07) Ultrathin Bonded Wearing Course 13
  - 602-1.04(08) Concrete Pavement Restoration (CPR) [Rev. Sep. 2020] 14
  - 602-1.04(09) Concrete Pavement Preservation (CPP) [Add. Sep. 2020] 15

602-2.0 PAVEMENT TYPE SELECTION [Rev. Jan. 2022, MAR. 2025, AUG. 2025] 16

602-3.0 PAVEMENT TYPES 16
- 602-3.01 Aggregate Pavement 17
- 602-3.02 Asphalt Pavement [Rev. May. 2023, Rev. Dec. 2023, Apr. 2025] 18
  - 602-3.02(01) HMA / SMA Surface [Rev. Dec. 2023] 21
  - 602-3.02(02) HMA Intermediate [Rev. Dec. 2023] 21
  - 602-3.02(03) HMA Base [Rev. Dec. 2023] 22
  - 602-3.02(04) Drainage Layer for HMA Pavement 22
  - 602-3.02(05) Separation Layer for HMA Pavement 23
  - 602-3.02(06) Unbound Aggregate Base and Subbase Course 23
- 602-3.03 Portland Cement Concrete Pavement 23
  - 602-3.03(01) Drainage Layer for PCCP 24
  - 602-3.03(02) Separation Layer for PCCP 24

602-3.04 Composite Pavement 25
602-3.05 Pavement Typical Sections 25

Figures 29

LIST OF FIGURES

Figure	Title
602-1A	Pavement Recycling Treatment Selection Flowchart
602-1B	HMA Preventive Maintenance Treatments [Rev. Sep. 2020]
602-1C	PCCP Preventive Maintenance Treatments [Rev. Sep. 2020]
602-3A	Full-Depth HMA Pavement with Full-Depth Shoulder with Underdrain (Rev. Dec. 2024)
602-3B	Full-Depth HMA Pavement with Full-Depth Shoulder with Underdrain for Interstates and High-Volume Roadways (Rev. Dec. 2024)
602-3C	Full-Depth HMA Pavement with Full-Depth Shoulder without Underdrain (Rev. Dec. 2024)
602-3D	Full-Depth HMA Pavement with HMA on Compacted Aggregate Shoulder with Underdrain (Rev. Dec. 2024)
602-3E	Full-Depth HMA Pavement Example Sections
602-3F	Full-Depth HMA Pavement Drainage and Separation Layers
602-3G	Full-Depth HMA Pavement with HMA on Compacted Aggregate Shoulder without Underdrain (Rev. Dec. 2024)
602-3H	HMA on Compacted Aggregate Pavement (Rev. Dec. 2024)
602-3I	Typical HMA Pavement on Compacted Aggregate
602-3J	Full-Depth HMA Ramp (Rev. Dec. 2024)
602-3K	Underdrain for HMA Pavement with Full-Depth HMA Shoulder
602-3L	Underdrain for Full-Depth HMA Pavement with HMA on Compacted Aggregate Shoulder
602-3M	Concrete Curb and Gutter Section for HMA Pavement with Underdrain, Curb on HMA Base
602-3N	Concrete Curb and Gutter Section for HMA Pavement with Underdrain, Curb on Drainage Layer
602-3O	Concrete Curb and Gutter Section for HMA Pavement without Underdrain
602-3P	Concrete Curb and Gutter Section for PCCP Pavement without Underdrain
602-3Q	Modified Concrete Curb and Gutter Section for HMA Pavement on Compacted Aggregate without Underdrain
602-3R	Modified Curb and Gutter Section for HMA or PCCP Pavement with Underdrain
602-3S	PCCP Section with PCC Shoulder

602-3T PCCP Section with HMA Outside Shoulder
602-3U PCCP with Concrete Curb
602-3V PCCP Ramp
602-3W Underdrain for PCCP
602-3X Underdrain for PCCP with HMA Shoulder
602-3Y Underdrain for Curbed PCCP
602-3Z Median Edge of Concrete Pavement Longitudinal Joint Options
602-3AA Safety Edge
602-3BB Retrofit Underdrain
602-3CC HMA Pavement with Concrete Curb without Underdrain
602-3DD Aggregate Pavement
602-3EE Parking Lot Pavement Sections [Rev. Apr. 2024]

CHAPTER 602

PROJECT CATEGORIES AND PAVEMENT TYPES

602-1.0 PAVEMENT PROJECT CATEGORIES [REV. SEP. 2020]

INDOT pavement projects will fall in one of the following four project categories for pavement design analysis:

1. New Alignment

2. Pavement Reconstruction

3. Pavement Rehabilitation
    a. Structural Overlay, major and minor
    b. PCCP Rubblization and HMA Overlay
    c. PCCP Cracking and Seating and HMA Overlay
    d. Unbonded PCCP overlay over old PCCP
    e. Thin Bonded Concrete Overlay
    f. Full Depth Reclamation
    g. Cold Central Plant Recycling (CCPR)

4. Preventive Maintenance
    a. Surface Treatments
    b. HMA Mill and Fill Overlay
    c. In-Place Recycling Technologies (HIR, CIR)
    d. Crack Sealing and Filling
    e. Fog Seal
    f. Seal Coat/Chip Seal
    g. Microsurfacing
    h. Ultrathin Bonded Wearing Course
    i. Concrete Pavement Restoration (CPR)
    j. Concrete Pavement Preservation (CPP)
    k. Pavement Preservation Initiative (PPI)

The pavement should be designed in accordance with Section 604-2.0, MEPDG using AASHTOWare Pavement ME Design software.

602-1.01 New Alignment

New Alignment projects include pavement designs that include recommendations for preparation of the subgrade and foundation soils if appropriate prior to placing the new unbound and bound pavement layers. Recommendations for New Alignment projects typically include a pavement thickness for both asphalt and concrete pavement.

602-1.02 Pavement Reconstruction

Pavement replacement projects include removal of the existing pavement structure, including subbase when appropriate, and preparation of the foundation soil and subgrade if necessary prior to placing a new pavement structure. Pavement damaged due to structural deficiencies should be considered for replacement.

602-1.03 Pavement Rehabilitation

Pavement Rehabilitation consists of structural enhancements that extend the life of an existing pavement and/or improve its structural capacity. A widening component may be included with a rehabilitation or structural overlay project. Rehabilitation techniques include restoration treatments and/or structural overlays. A pavement that is currently structurally insufficient or will be insufficient based on future traffic is a candidate for a rehabilitation type project.

602-1.03(01) Structural Overlay

The majority of Structural Overlay projects add pavement structure with an overlay. This may include partial recycling of the existing pavement, placement of additional surface materials, and/or other work necessary to return an existing pavement to a condition of structural adequacy. A pavement structural overlay will be by design, but may generally be:

1. A 2-layer HMA overlay, also known as minor structural treatment; or
2. A 3-layer HMA overlay, also known as major structural treatment.

602-1.03(02) PCCP Rubblization and HMA Overlay

One effective way to rehabilitate a PCCP that has lost structural capacity is to rubblize the existing PCCP and overlay with HMA based on MEPDG design analysis. Within MEPDG, the design type to be selected is that of a “new” design, however it should be noted that this is classified outside of the software as a pavement rehabilitation treatment.

Refer to *Standard Specifications* Section 305 for construction requirements and surface preparation for rubblizing PCCP. Rubblizing consists of breaking the concrete into particles ranging from sand size to pieces not exceeding 6 in. in the largest dimension, with the majority being a nominal 1 to 2 in. in size. Rubblization should only be designed and constructed as an unbound pavement subbase layer and not a drainage layer. A rubblized pavement subbase layer will have a gradation that includes 0% passing 6 in. and 40% passing 3 in. The concrete from the surface to the top of the reinforcements should be reduced to 1 to 2 in. in size to the fullest extent possible.

Underdrains should be designed and placed along the edges of the pavement prior to rubblization. Geotextile will not be required with underdrains when used with rubblization.

Special attention should be made to the geotechnical report to determine if the soil type and characteristics are compatible with a recommendation for rubblization.

602-1.03(03) PCCP Cracking and Seating and HMA Overlay

Another effective way to rehabilitate a PCCP that has lost structural capacity is to crack and seat the existing PCCP and overlay with HMA based on MEPDG analysis. Cracking and seating consist of cracking the existing PCCP pavement and requires a unique special provision.

A unique special provision is available for cracked and seated pavement and may be obtained through INDOT Central Office Pavement Design. For construction requirements and surface preparation, refer to the unique special provision.

Underdrains should be designed and placed along the edges of the pavement prior to crack-and-seating. Geotextile should be used with underdrains in accordance with geotechnical recommendations.

602-1.03(04) Unbonded PCCP Overlay over Old PCCP

Another effective way to rehabilitate a PCCP that has lost structural capacity is to overlay the existing PCCP with an unbonded PCCP. To create an unbonded PCCP a thin, single layer, typically 1 in. to 2 in., of HMA is placed on the existing PCCP. Other de-bonding layers such as a paving fabric interlayer may be used if existing PCCP conditions allow. Prior to placing the QC/QA HMA layer, a hydrated lime slurry or white pigmented curing compound for whitewashing should be applied to the surface of the HMA separation layer to cool the HMA before placing the concrete overlay. The use of unbonded PCCP overlay may require a unique special provision, in which case, the designer should contact the Pavement Engineering Manager.

Underdrains should be designed and placed along the edges of the pavement prior to the overlay. If a paving fabric interlayer is used, drainage of the interlayer has to be extended to the underdrain trench or the pavement shoulder and daylighted to the back slope when no underdrains are present.

602-1.03(05) Thin PCCP Overlay Bonded to Old Pavement

An effective way to rehabilitate existing Full Depth HMA and Composite pavement is to overlay the existing pavement with a Thin Bonded Concrete Overlay. INDOT does not typically consider Thin Bonded PCCP overlays over existing concrete. However, the pavement designer should consult the Central Office Pavement Design Engineer if a Thin Bonded Concrete Overlay over existing concrete is found to be a viable treatment option.

Thin Bonded Concrete Overlays consist of milling the existing HMA pavement surface and overlaying with a 4 in. to 6 in. concrete layer containing fibers. The overlay bonds to the existing milled surface creating one structurally combined pavement section. The existing pavement must be a good candidate for a Thin Bonded Concrete Overlay in order for this treatment to be effective. A minimum of 3 in. of existing asphalt pavement should remain after milling. If the existing pavement structure has an effective structural number > 2.0 after milling operations have been performed to correct surface distresses, then a concrete overlay ranging from 4 in. to 6 in. in depth may be used to overlay the existing pavement. The use of Bonded Concrete Overlays will require a unique special provision, in which case, the designer should contact the Pavement Engineering Manager.

602-1.03(06) Full Depth Pavement Reclamation

Full Depth Reclamation (FDR) is a rehabilitation technique in which the full thickness of the asphalt pavement and a predetermined portion of the underlying materials (base, subbase and/or subgrade) is uniformly pulverized/reclaimed and blended to provide an upgraded, homogenous base material. The key to FDR performance is consistency of the strength modulus of the reclaimed material. The base materials are shaped, compacted, bladed, and prepared for the surface course. The reclaimed materials are then blended with either asphalt emulsion or cement to stabilize and produce a structural base layer.

The maximum depth currently recommended for FDR is 10 in. because of the desire to avoid the development of a density gradient within the vertical cross section of this single layer construction technique. Cement stabilizer can be used for any amount of subgrade material, cohesive or otherwise, while asphalt emulsion cannot be used with a significant amount of cohesive subgrade material. The application and selection of the stabilizer material is based on a decision to either include or exclude subgrade material.

The INDOT Geotechnical Services must investigate, evaluate, and make recommendations on the soil moisture content, and organic content to determine the suitability of the pavement subbase and subgrade materials for FDR. FWD is also required to determine subbase and subgrade strength.

Pavements that have extensive subgrade or drainage problems are candidates for FDR only when additional work is undertaken to correct the deficiencies. In areas where the required treatment is too deep for single pass FDR or due to vertical constraints adjustments in the construction process can be made to address the constraints, such as a two-pass technique. Full depth reclamation projects are rehabilitation projects that should be designed geometrically as structural overlays.

Pavement distresses which can be treated by FDR include:

1. all forms of cracking including age, fatigue, edge, slippage, block, longitudinal, reflection, or discontinuity;
2. reduced ride quality due to swells, bumps, sags, patches, or depressions;
3. permanent deformations in the form of rutting, corrugations, or shoving;
4. loss of bonding between pavement layers;
5. moisture damage (stripping);
6. loss of surface integrity due to raveling, potholes or bleeding;
7. excessive shoulder drop off; or
8. inadequate structural capacity,

The expected design life, performance requirements during the design life, and acceptable future maintenance requirements are related to treatment depth of the FDR, types and amount of stabilizer used, subgrade type and conditions.

For FDR projects, an existing roadway assessment, structural capacity assessment, materials properties assessment, geometric assessment of the existing and proposed sections, traffic assessment, constructability assessment, and an economic assessment needs to be conducted. A flow chart has been developed to aid in the selection of the correct treatment for pavement recycling projects. See Figure 602-1A, Pavement Recycling Treatment Selection Flowchart for determining an appropriate recycling treatment.

The expected service lives of the various FDR rehabilitation techniques, when undertaking a pavement life-cycle economic analysis, generally fall within the following ranges:

1. FDR with single-lift HMA overlay.....7 - 15 years*
2. FDR with two-lift HMA overlay .....12 - 20 years*

*MEPDG design analysis is necessary to determine the exact design life.

Additional information on the FDR process including project analysis, mix designs, construction requirements, and recommended specifications are included in the Basic Asphalt Recycling Manual (BARM), located on the Asphalt Recycling and Reclaiming Association (ARRA) webpage at: www.arra.org.

602-1.03(07) Cold Central Plant Recycling

Cold Central Plant Recycling (CCPR) is a proven pavement rehabilitation method that utilizes recycled materials. CCPR involves stockpiling Reclaimed Asphalt Materials (RAP), crushing RAP to a specific gradation, mixing RAP with a recycling agent, adding additives to the RAP mixture if needed, transporting the CCPR mixture to the project site, laying down the CCPR mixture, paving the recycled CCPR mix, and compacting the recycled CCPR mixture for use as a temporary riding surface. A final surface layer will be provided on the prepared CCPR material. CCPR is most frequently used as part of the rehabilitation of an existing roadway, where the existing pavement cannot be in-place recycled or must be removed to allow treatment of underlying materials. However, CCPR can also be used in new construction where an existing separate source of RAP is available. CCPR in conjunction with an asphalt overlay is generally used with high frequency and high-severity, non-load associated distresses. It can also be used to address load related stress when used in conjunction with a multiple lift asphalt overlay to increase the pavement's structural capacity. The expected design life and performance during the design life are related to the depth of treatment and the type and thickness of the asphalt overlay course(s).

602-1.04 Preventive Maintenance

A Preventive Maintenance (PM) pavement treatment is intended to preserve and extend the service life of an existing good pavement. A PM project should be considered as cost-effective treatment to an existing roadway system and its appurtenances that preserves the system, retards future deterioration, and maintains or improves the functional condition of the system without significantly increasing structural capacity. The proper time for a PM is before the pavement experiences severe distress, structural problems, and moisture or aging-related damage. Projects that address deficiencies in the pavement structure or increase the structural capacity of the facility are not considered preventive maintenance. PM work includes surface treatments as described in Section 602-1.0. See Figure 602-1B, HMA Preventive Maintenance Treatments and Figure 602-1C, PCCP Preventive Maintenance Treatments for details regarding the conditions under which different PM treatments are best suited.

602-1.04(01) Mill and Fill Overlay Treatment

A mill and fill single layer HMA overlay treatment is to preserve and extend the life of an existing good pavement. INDOT's typical mill and fill single layer HMA overlay consists of a surface

course comprised of 1.5 in. (165 lb/yd²) or 2 in. (220 lb/yd²) of a 9.5mm Mixture Designation. Prior to the overlay, the existing surface is removed using Milling, Asphalt to a required depth for the overlay. This treatment is used to replace a deteriorated surface and retard progressive damage to lower layers in the pavement structure and reduce the need for routine maintenance.

602-1.04(02) In-Place Recycling [Rev. Sep. 2020]

Reusing the existing materials and renewing the pavements through pavement recycling and reclaiming meets current social goals of providing safe and efficient roadways, while at the same time drastically reducing both the environmental impact and energy consumption specific to conventional pavement reconstruction. In-place recycling consists of two broad categories including Hot In-Place Recycling (HIR) and Cold In-Place Recycling (CIR).

Additional information on HIR and CIR processes are included in the Basic Asphalt Recycling Manual (BARM), available from the Asphalt Recycling and Reclaiming Association (ARRA) webpage at www.arra.org.

1. Hot In-Place Recycling. Hot In-Place Recycling is the process of heating and softening the existing asphalt pavement for processing. HIR is limited in depth to less than 2 in. (50 mm) and addresses oxidation (aging) and most surface related distresses (cracking confined to the surface of the pavement). Pavements with structural distresses are not good candidates for HIR.

   After heating, the asphalt material is picked up and remixed with admixtures and then spread back onto the surface of the roadway and compacted, all in one operation. An HMA surface should be placed after the HIR process. INDOT does not routinely utilize HIR.

   Cold In-Place Recycling. Cold In-place recycling is the process of reusing the existing asphalt pavement by milling to a depth of 3 to 4 in. (75-100 mm), mixing the millings with a recycling agent (asphalt emulsion) and paving and compacting the cold-recycled mix. CIR has been successfully used on pavements with a higher degree of cracking that would normally require removal of the cracked surface and a thick overlay. Instead, the top portion of the existing pavement is recycled, and a thin overlay is applied over the cold recycled asphalt pavement. CIR is applicable for urban or rural roadways with high or low volumes of traffic.

   CIR can be used as a preventive maintenance treatment to address most types of pavement distresses. Cracked pavements which are structurally sound and have well-drained bases are the best candidates. The CIR process destroys existing crack patterns and produces a crack-free layer for the new surface course such as an HMA or an asphalt surface treatment. For CIR to be effective in mitigating cracking, as much of the existing asphalt pavement layer should be treated as possible.

For a CIR project, assessments of the existing roadway, structural capacity, material properties, geometry of the existing and proposed cross sections, traffic, constructability, as well as an economic assessment must be conducted. See INDOT *Standard Specifications* section 416 for Cold In-Place Recycling.

602-1.04(03) Crack Sealing and Filling

Crack sealing and filling is the cleaning and sealing or filling of open cracks or joints in asphalt pavement and shoulders to prevent the entry of moisture and debris. The major objective of routing is to provide a uniform and smooth-edged rectangular reservoir to let the sealant material adhere better with the asphalt pavement and for allowing the sealant level to remain below the pavement surface, which protects the sealant from traffic and snowplow damage. This PM treatment may be periodic once more cracks develop as the pavement ages.

602-1.04(04) Fog Sealing

A fog seal is a method of adding asphalt to an existing pavement surface to improve sealing or waterproofing, prevent further stone loss by holding aggregate in place, retarding the age hardening of the asphalt, and improve the surface appearance. However, inappropriate use can result in a slick pavement and tracking of excess material. The pavement section should show no structural deficiencies prior to fog sealing. Fog sealing is generally recommended for shoulders or chip sealed surfaces.

602-1.04(05) Seal Coat/Chip Seal

Seal coat is the treatment of the pavement surface with liquid asphalt material and coarse aggregate to prevent deterioration of the surface. Seal coat is often called chip sealing. It provides waterproofing, low-severity crack sealing, and improved friction. The pavement section should show no structural deficiencies prior to chip sealing. Cores should be taken to determine the thickness and investigate if a stripping condition exists. Isolated areas with structural deficiencies should be repaired prior to chip sealing. Scarification prior to chip seal may be considered. A slight increase in the profile grade may occur depending on aggregate selection. A previously seal-coated surface may be sealed again.

For mainline and shoulder pavement with AADT over 1000, asphalt for seal coat type P should be specified.

The type of seal coat should be specified as follows:

1. Type 2, 3, 2P or 3P. These are single-course seal coats appropriate for paved mainline or shoulders. The P designation indicates that polymer modified asphalt is specified. See Standard Specification 404 for descriptions of different types.
2. Type 5, 6, 7, 5P, 6P or 7P. These are double-course seal coats appropriate for unpaved mainline or unpaved shoulders. The P designation indicates that polymer modified asphalt is specified. See Standard Specification 404 for descriptions of different types.

602-1.04(06) Microsurfacing

Microsurfacing is a thin, polymer-modified asphalt emulsion mixture. Microsurfacing may be used to provide a new wearing course to arrest the oxidation of asphalt pavement, improve friction, or fill ruts. An existing pavement should not have excessive cracking or surface irregularities such as shoving. Cores should be taken to determine the thickness and investigate if a stripping condition exists. Core data and pavement life-cycle cost data should be reviewed with the Pavement Division for specific recommendations.

All pavement markings and raised pavement markers must be removed prior to placement of a microsurface. This should be included in the appropriate pavement-marking-removal pay items.

If a pavement cross section has irregularities that will require a leveling course, or ruts greater than 0.25 in. that will require a rut fill course, a multiple course microsurface should be specified. The designer should typically specify a multiple course microsurface. A single course microsurface may be specified in unique situations, such as a nearly new road in excellent condition where the only purpose of the microsurface is to restore friction.

602-1.04(07) Ultrathin Bonded Wearing Course

Ultrathin bonded wearing course (UBWC) is a gap-graded, ultrathin hot-mix asphalt mixture applied over a thick polymer-modified asphalt emulsion membrane. The emulsion membrane seals the existing surface and produces high binder content at the interface of the existing roadway surface. The gap-graded mix is placed with the emulsion membrane in one pass.

Cores should be taken to determine the thickness and investigate if a stripping condition exists prior to selection of UBWC. All thermoplastic pavement markings and raised pavement markers are to be removed prior to placement of a UBWC. The removal quantities should be included in the appropriate pavement-marking-removal pay-items quantities. Diamond grinding or milling may be required to provide additional smoothness prior to placement of a UBWC layer. The appropriate pay items for diamond grinding or milling will thus be needed.

The pay item for UBWC should specify the gradation size as 4.75 mm, 9.5 mm, or 12.5 mm. In most applications, the 9.5 mm gradation should be specified.

602-1.04(08) Concrete Pavement Restoration (CPR) [Rev. Sep. 2020]

Concrete Pavement Restoration (CPR), of a PCCP may be used where the existing PCCP is structurally sufficient but has reduced serviceability.

The condition of the driving lane of PCCP is an indicator of the project's suitability for CPR. FWD testing and core investigation for "D" cracking at joints should be completed. A PCCP investigation where cores indicate a "D" cracking distress is not typically a candidate for CPR or PM treatment.

The cost of the recommended concrete repair work should be compared to the cost of replacing the existing pavement or an alternate rehabilitation technique. CPR treatments include the following:

1. PCCP Crack Routing and Sealing/PCCP Crack Cleaning and Filling. PCCP Crack routing and sealing consists of routing cracks in PCCP pavement and sealing them with hot poured joint sealant. PCCP crack cleaning and filling consists of blowing cracks in PCCP clean and filling with asphalt material to minimize the entry of moisture and debris.
2. PCCP Joint Sawing and Sealing/PCCP Joint Cleaning and Filling. Contraction joints and longitudinal joints should be inspected periodically and cleaned and resealed as required. Joint sawing and sealing consists of sawing existing joints to a width and depth specified on plans and sealing with joint seal material. Joint cleaning and filling consists of removing old joint seal material and backer rod, blowing the joint clean, and filling with hot poured joint sealant. For PM, timely sealing of the joints minimize dirt and moisture from entering the joints. Rigid pavement, 8 to 10 years old, should be inspected.
3. Retrofit Load Transfer Restoration. This consists of retrofitting dowels in jointed PCCP at mid-panel and random cracks. The pavement performance is improved by reestablishing load transfer and helping keep the elevation of adjacent panels the same elevation and slows the increase of IRI due to faulting. This work consists of the cutting of slots, placing new dowels or reinforcing bars, then grouting them into place. The pavement may be profiled to improve smoothness after the retrofit load transfer is complete.
4. Surface Profiling/Diamond Grinding. This procedure is used to restore or improve pavement rideability by removing surface defects that develop from traffic loading and environmental conditions. Surface profiling enhances surface friction of an existing pavement surface. The resulting corduroy-like surface provides ample channels for water to escape the surface. Surface profiling is recommended to restore rideability if faulting causes the IRI to exceed 150. A faulted pavement must be repaired with retrofit load

transfer or full-depth patching prior to surface profiling. Additionally, retexturing of the pavement may be necessary after diamond grinding.

5. Partial-Depth Patching. This is primarily used to improve ride quality. It should be limited to the upper one third of the concrete-pavement depth. The area to be patched should be sawed, and all unsound material removed prior to placement of patch material

6. Joint Repair, Partial Depth and Joint Repair, Bottom-half. This repair work should consist of partial depth patching and bottom-half patching at PCCP joints, cleaning and sealing of joints and cracks beyond areas of PCCP joint repair, profiling, underseal, and retrofit load transfer.

7. Full-Depth Patching. This consists of complete removal of a deteriorated section of concrete pavement for a full lane width and patching it with new concrete. Full-depth patching may be used to restore pavement rideability and to replace deteriorated joints and cracks. Full-depth patching details are shown on the INDOT *Standard Drawings* or a modified drawing included with the pavement design. Isolated cracked D-joints that have spalled out may be patched; however, patching would be considered a short-term fix since the remainder of the joints will soon become distressed. If a pavement is D-joint cracked, a slab-reduction technique (Crack and Seat or Rubblization) and overlay should be used.

8. Underseal/Slab Stabilization. This consists of pumping flowable asphalt or cement material into voids under concrete pavement. This will stabilize the slab and minimize rocking and pumping, and extend the life of the pavement. Pavements with open-graded subbase should not be undersealed. Underseal should not be used in urban sections where utilities may exist under the roadway. Falling weight deflectometer (FWD) testing must be done in advance of undersealing to determine locations and material quantities.

9. Slab Jacking. This consists of raising a settled slab to its original profile grade by pumping flowable material underneath. This technique may be used on one or several panels to restore rideability. Panels should be intact with no mid-panel cracking. It may also be used to correct lane faulting for concrete pavement without underdrains.

10. Longitudinal Joint or Crack Stitching. This treatment involves drilling and inserting reinforcing steel at approximately 45-deg angles across longitudinal cracks and joints in accordance with the specifications. This technique is used to prevent longitudinal cracks or joints from faulting.

11. Precast Concrete Panels. Precast Concrete Panels are fabricated concrete panels that can be installed in-place.

602-1.04(09) Concrete Pavement Preservation (CPP) [Add. Sep. 2020]

Concrete Pavement Preservation (CPP) includes joint sealing or crack sealing. Minimal amounts of full depth patching, joint repair, and partial depth patching is acceptable as well. Information

regarding concrete joint sealing, crack sealing, and full depth patching can be found in section 602-1.04.

602-2.0 PAVEMENT TYPE SELECTION [REV. JAN. 2022, MAR. 2025, AUG. 2025]

INDOT will prescribe the pavement type (either asphalt or concrete) on a project-by-project basis. Pavement selection will be based on an evaluation of various factors, including, but not limited to:

- Engineering analysis and sound pavement design principles.
- Life-cycle pavement cost analysis (LCPCA) and overall system performance. The LCPCA criteria are described in Section 606-1.0.
- Pavement asset history.
- Network balance and strategic use of pavement types across the state.
- Project scope, site-specific conditions, and project costs.
- Long-term maintenance considerations and sustainability.

For an LPA project, HMA or PCCP may be chosen at the discretion of the LPA.

602-3.0 PAVEMENT TYPES

The types of pavement used in Indiana are Aggregate, Asphalt, Portland Cement Concrete, or Composite (asphalt over concrete, or concrete over asphalt). A pavement designer is expected to have a thorough understanding of these pavement types and their uses from pavement design courses, experience, professional references, and text books. The below asphalt and concrete sections are listed to provide an example of general pavement layers. Not every pavement layer depicted below will necessarily be utilized in an individual pavement section.

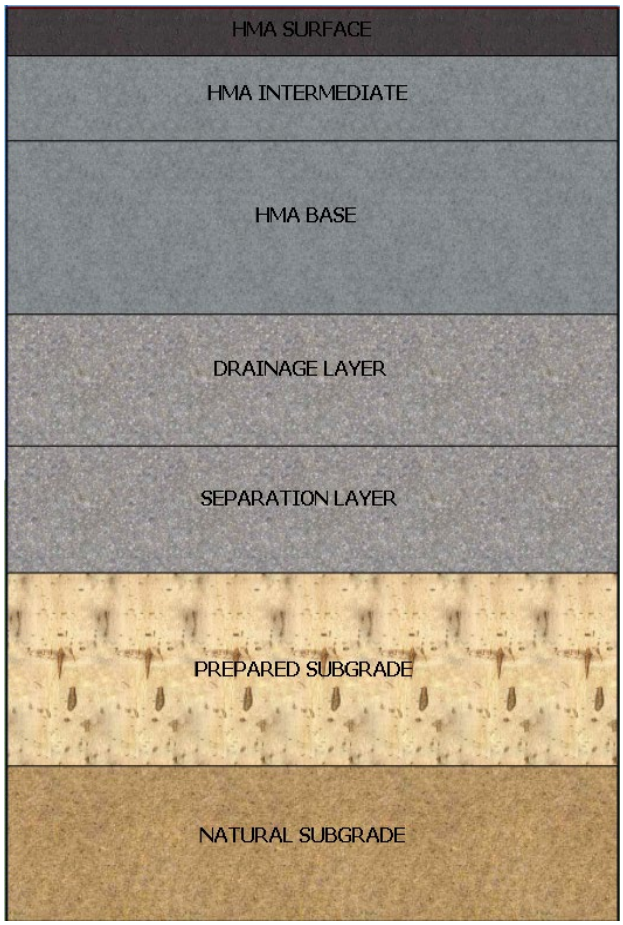

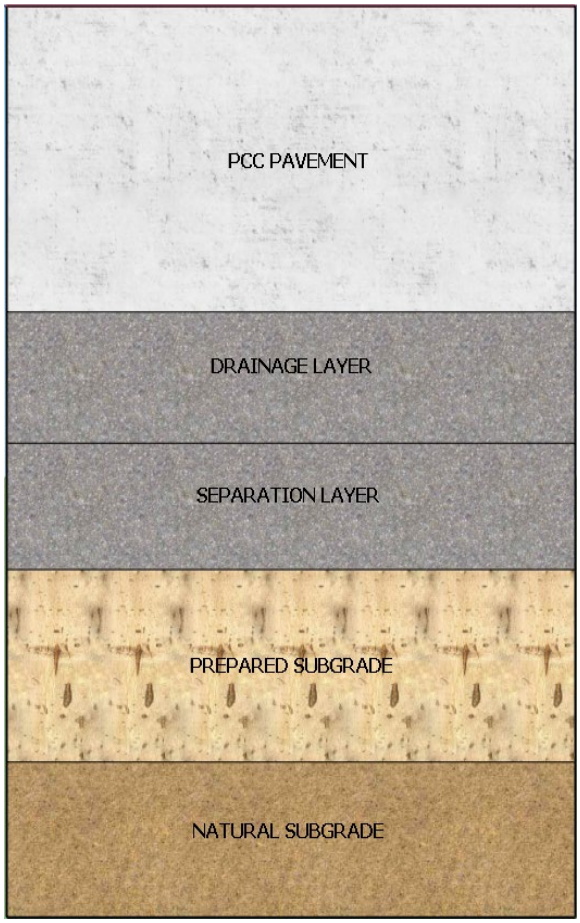

The pavement treatment selected for a project, and the corresponding layer needs and thicknesses, is based on a variety of factors. The use of Aggregate, Asphalt, Portland Cement Concrete, or Composite pavement, the inclusion of underdrains, the inclusion of drainage and separation layers, the inclusion of curb or gutter, the location of longitudinal joints, shoulder treatment, etc. are all determined by project specific requirements. Pavement designers should reference the following figures for guidance on developing a pavement treatment section that meets specific project needs.

602-3.01 Aggregate Pavement

An aggregate pavement consists of a dense-graded compacted aggregate placed on a prepared subgrade. The pavement is typically composed of 4 in. compacted aggregate No. 73, on 6 in. compacted aggregate No. 53, on Subgrade Treatment, Type III (6 in. of compacted aggregate No. 53), or as specified in geotechnical report, with appropriate drainage measures.

See Section 602-3.05 for Aggregate pavement sections.

Aggregate pavements are used on county roads, low-volume roads, and State Parks in Indiana; they may also be used in emergency situations on major INDOT highways, (i.e., emergency earthquake, flooding, or other unique circumstances at the Department's directive). Further information regarding aggregate pavements and bases is located in INDOT *Standard Specifications* Division 300.

602-3.02 Asphalt Pavement [Rev. May. 2023, Rev. Dec. 2023, Apr. 2025]

HMA pavement comprises the majority of pavement surfaces in the Indiana highway system. They are used on local roads, state routes, on the NHS, and on interstate highways. INDOT's typical full-depth asphalt pavement is composed of a surface course, on an intermediate course, on a base course, on a drainage layer, on a separation layer on prepared subgrade, with underdrains and adequate support from foundation soils below.

An asphalt pavement overlay may consist of a single-lift HMA surface course or multiple HMA lifts on existing pavement.

See Section 602-3.05 for HMA pavement sections. The following should be considered for the design of asphalt pavement.

1. Drainage layer. A drainage layer may be utilized at the bottom of a new asphalt pavement on top of a separation layer, in accordance with FHWA guidelines http://www.fhwa.dot.gov/pavement/pavedesign.cfm).

2. Lift or Layer thickness. Lift or layer thicknesses are determined by the Nominal Maximum Aggregate Size (NMAS) used in each mixture designation. See the table in item 3 below. A layer thickness is what a pavement designer designs for a certain mixture designation. A layer may have to be divided into two or more lifts to accomplish proper construction and compaction. A pavement designer must consider both the layer thickness and whether it needs to be divided into multiple lifts for constructability and compaction purposes.

   Lay thicknesses play an important role in HMA construction quality control. Neither high lift thickness nor low lift thickness is desirable to achieve good compaction results. From a mechanistic point of view, the compaction pressure applied to the HMA layer is the highest at the top surface of the lift where the HMA materials directly contact the compacting roller. This compaction pressure decreases with depth, which means that if the lift thickness is too high, the required compaction pressure may not be applied to the materials at the bottom of the lift. On the other hand, since compaction is significantly affected by the lay down temperature, and the temperature decreases more quickly with thin HMA lifts, good compaction results cannot be achieved if the lift thickness is too low.

3. Additional Consideration for Compaction. In addition to lay thickness, nominal maximum aggregate size, aggregate gradation, and asphalt binder type affect HMA compaction. The *Standard Specifications* require that the finished thickness of any course should be at least 2 times but not more than 5 times the maximum particle size as shown on the Design Mix Formula (DMF). This requirement applies during construction; however, the pavement designer should design the lay thickness according to the research findings from *NCHRP Report 531*.

NCHRP Report 531 indicates that the HMA pavement density that can be obtained under normal rolling conditions is clearly related to the ratio of the layer thickness divided by NMAS of the HMA mixture. To achieve proper compaction, the thickness divided by NMAS ratio should be 4, or the thickness divided by Maximum Particle Size should be 3. The pavement designer should target lifts of 3 to 4 times the Maximum Particle Size and avoid designing to the minimum or maximum. Likewise, the pavement design should specify the smaller aggregate size for intermediate and base mixtures where given the choice. While this will require more binder, this makes for a more desirable pavement structure: better density, better stability, and less permeability. If the design layer thickness of a specific layer exceeds 5 times the Maximum Particle Size, then that specific layer should be laid in two lifts, e.g., 770 lb./yd² of Base, 19.0 mm should be laid in two lifts of 385 lb./yd² each lift.

MIXTURE TYPE, MAXIMUM PARTICLE SIZE AND HMA LAYER THICKNESS					
Mixture Type	Nominal Maximum Aggregate Size (in.)	Maximum Particle Size (in.)	Minimum HMA Layer Thickness (in.)	Maximum HMA Layer Thickness (in.)	Target HMA Layer Thickness (in.)
9.5 mm	0.375 (3/8)	0.5	1.0	2.5	1.5 or 2.0
12.5 mm	0.5	0.75	1.5	3.75	2.5 – 3.0
19.0 mm	0.75	1.0	2.0	5.0	2.5 – 4.0
25.0 mm	1.0	1.5	3.0	7.5	4.5 – 6.0

Thickness, maximum particle size, and PG Binder are determined based on various factors of the roadway being evaluated. The pavement designer may choose various maximum particle size and appropriate lay rates for surface, intermediate, and base courses based on design criteria and in accordance with *Standard Specifications* Section 400.

4. Multiple Stress Creep Recovery Test. The Multiple Stress Creep Recovery (MSCR) test is the latest improvement to the Performance Graded (PG) Asphalt Binder specification. The major difference between the new MSCR PG asphalt binder specification and the old Superpave PG asphalt binder is how

high temperature grade bumping is done. Under the old system, if the high temperature grade was a PG 64 based on climate, but due to heavy traffic, INDOT would require 2 grade bumps to specify a stiffer and more rut resistant PG 76 binder.

The MSCR specification establishes a new naming convention for PG binders. The first number reflects the high pavement temperature in Celsius at which the binder is expected to perform, followed by the letter grade designation based on traffic levels followed by the low temperature grade in Celsius. With MSCR the high temperature grade will no longer required to be bumped to account for higher traffic volumes. Stiffer binders for roadways with higher traffic volumes or slow-moving traffic are now specified by changing the traffic designation value.

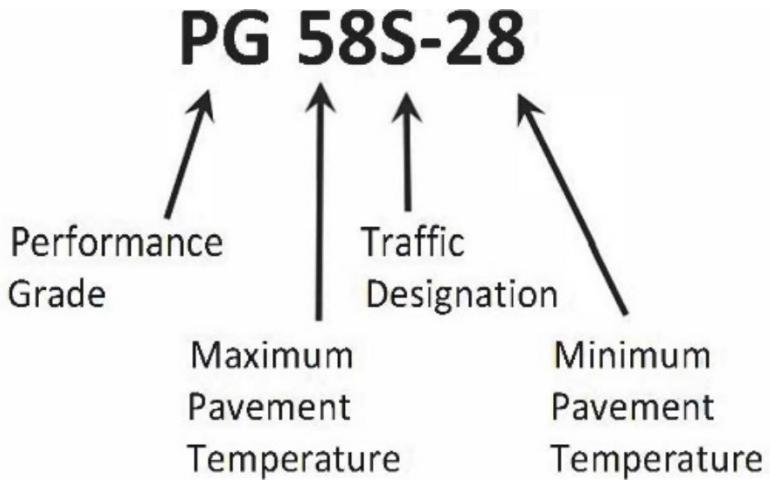

Traffic designation "S" (or Standard grade) represents a neat (unmodified) binder with no grade bumps. If heavy or slow-moving traffic is expected the MSCR traffic designation value is changed to the corresponding "H" (or Heavy), or "E" (Extreme) grades. See Section 607-1.01 for selection of the traffic designation value for MSCR PG binders.

5. Void Reducing Asphalt Membrane. Low asphalt pavement density and the intrusion of air and water in longitudinal joints can accelerate pavement deterioration. The application of hot applied polymer-modified asphalt also known as Void Reducing Asphalt Membrane (VRAM) has proven to be a cost-effective remedy in retarding pavement deterioration. VRAM fills the voids, reduces water intrusion, and protects the underlying pavement layers. It is applied under the longitudinal joint in new asphalt and migrates upward as the hot mix is installed on top of it.

VRAM will be used for all ESAL category surface 401 QC/QA HMA and 410 QC/QA SMA mixes over 300 tons. The design guidance is as follows:

a. VRAM should be used on projects with more than 300 tons of 401 QC/QA HMA or 410 QC/QA SMA surface material used as a mainline pavement. VRAM is not required where a longitudinal joint will be formed with a commercial drive, private drive, or mailbox approach.

b. Joint adhesive should be use on projects with less than 300 tons of 401 QC/QA HMA or 410 QC/QA SMA surface material used as a mainline pavement. When the project does not contain any mainline pavement work, joint adhesive should be used regardless of the HMA quantity.

VRAM should be used where a longitudinal joint will be formed within the traveled way, between the traveled way and an auxiliary lane, between the traveled way and a paved shoulder, and between an auxiliary lane and a paved shoulder.

VRAM is placed before the HMA surface and replaces Hot Poured Joint Adhesive for the surface layer. Hot Poured Joint Adhesive for the intermediate layer should still be included in projects that contain VRAM.

The VRAM for HMA and VRAM for SMA are paid for at the contract price per the linear foot for full width applications and at half the contract price for half width applications. Consideration should be taken regarding potential bundled contracts as VRAM may not be appropriate on some roadways with small quantities of HMA surface mix.

602-3.02(01) HMA / SMA Surface [Rev. Dec. 2023]

INDOT's typical surface course is comprised of 1.5 in. (165 lb/yd²) or 2 in. (220 lb./yd²) of a 9.5 mm mixture designation. These typical surface courses may be used as PM treatments, in a two-lift minor structural pavement treatment, or as part of full-depth pavement. INDOT also uses a thin-layer HMA surface, comprised of a 0.75 in. thickness of a 4.75 mm mixture designation, as a PM surface treatment. The PG binder grades for the surface course can be PG58S-28, PG58H-28, or PG58E-28. These surfaces are used on all functional classifications of roads in Indiana.

602-3.02(02) HMA Intermediate [Rev. Dec. 2023]

INDOT's typical intermediate course is comprised of 2.5 in. (275 lb/yd²) but may be as much as 5 in. at 550 lb/yd², of a 19.0 mm, although thinner 9.5 mm and 12.5 mm mixtures may also be used.

The PG binder grades for the intermediate course can be PG58S-28, PG58H-28, or PG58E-28. The pavement designer must always be cognizant of the lay rate/maximum aggregate (particle) size relationship and target a lay rate of 3 to 4 times the maximum particle size. These typical intermediate courses may be used in a two-lift pavement treatment or as part of full-depth pavement. These intermediate courses are used in all functional classifications of roads in Indiana.

602-3.02(03) HMA Base [Rev. Dec. 2023]

The INDOT typical base course is comprised of thicknesses ranging from 3 in. to 6 in., (330 lb/yd² to 660 lb/yd²) and is composed of a 19.0 mm or 25.0 mm mixture designation with PG58S-28. These typical base courses are to be used in a full-depth pavement. These base courses are used in all functional classifications of roads in Indiana.

602-3.02(04) Drainage Layer for HMA Pavement

A drainage layer will typically consist of an aggregate subbase or an open-graded asphalt layer, but depending on project conditions, other acceptable drainage layers may be considered. Additional information regarding when to use particular drainage and separation layers can be found in the FHWA Pavement Design Manual located at (http://www.fhwa.dot.gov/pavement/pavedesign.cfm).

1. Aggregate Drainage Layer. A 4 in. to 6 in. thick permeable aggregate drainage layer may be used should the existing conditions be best suited for the use of aggregate as a drainage layer material. The pavement designer should coordinate with INDOT Central Office Pavement Design Reviewer should aggregate drainage layers be used.

2. Open Graded Asphalt Layer (Asphalt Treated Permeable Base). An open-graded drainage layer will be the bottom-most asphalt lift in the pavement structure. The open-graded layer will be placed upon a separation layer. INDOT's typical lay rate for open-graded layers is 100 lb/yd² per inch and is typically placed at 250 lb/yd² (2.5 in.) to 300 lb/yd² (3 in.).

3. Cement Treated Permeable Base. A cement treated permeable base may be used as a drainage layer should the project conditions be suitable. The pavement designer should coordinate with INDOT Central Office Pavement Design Reviewer should a cement treated permeable base be used.

4. Geosynthetic Subsurface Drainage Layer. When conditions warrant the use of a geosynthetic subsurface drainage layer, the drainage layer may consist of such a layer. The pavement designer should coordinate with INDOT Central Office Pavement Design Reviewer should a geosynthetic subsurface drainage layer be required.

602-3.02(05) Separation Layer for HMA Pavement

The typical INDOT separation layer will consist of a geotextile layer placed below an aggregate subbase, but depending on project soil conditions, an aggregate only separation layer may be warranted. Additional information regarding when to use particular drainage and separation layers can be found in the FHWA Pavement Design Manual located at (http://www.fhwa.dot.gov/pavement/pavedesign.cfm).

1. Geotextile Separation Layer. A geotextile separation layer in accordance with INDOT *Standard Specifications* 918 may be used if the project conditions are suitable for the use of a geotextile separation layer. In accordance with INDOT *Standard Specifications*, 6 in. of compacted aggregate should be placed on top of the geotextile layer.

2. Aggregate Separation Layer. A 4 in. to 6 in. aggregate separation layer consisting of compacted aggregate No. 53 may be used if project conditions are best suited for an aggregate separation layer only. Aggregate separation layers should be in accordance with INDOT *Standard Specifications* and based on guidance from the Central Office Pavement Design Reviewer.

602-3.02(06) Unbound Aggregate Base and Subbase Course

HMA over compacted aggregate will be designed as flexible pavement.

Unbound aggregate layers consist of aggregate base and aggregate subbase layers. Compacted aggregate unbound base and subbase layers can be used under aggregate and HMA. See INDOT *Standard Specifications* Section 301 for aggregate bases and subbases. A compacted aggregate is typically used on shoulders. See INDOT *Standard Specifications* Section 303 for aggregate pavements or shoulders.

602-3.03 Portland Cement Concrete Pavement

Portland cement concrete pavement (PCCP) consists of concrete materials placed on subbase for PCCP or dense graded subbase, on a prepared subgrade.

See Section 602-3.05 for PCCP sections.

Subbase for PCCP consists of a drainage layer and separation layer below the concrete pavement.

PCCP is composed of Portland cement, supplementary cementitious materials (SCMs) such as fly ash, ground granulated blast furnace slag (GGBFS), coarse and fine aggregates, water, and chemical admixtures.

With jointed plain concrete pavements (JPCP), dowels are constructed at transverse planned contraction joints to provide load transfer between adjacent panels. Tie bars are placed along longitudinal joints to provide lateral support and tie two lanes together.

Safety edges are constructed where the pavement is constructed adjacent to earth or aggregate shoulders.

PCCP is typically used on the Interstate system and the NHS, particularly where there are high volumes of traffic, especially trucks. PCCP is also used on state routes where there are high volumes of traffic, especially trucks and in urban areas due to slower design speeds, and increased intersections and stop conditions.

INDOT has exclusively constructed Jointed Plain Concrete Pavements (JPCP) in the last three decades. Continuously Reinforced Concrete Pavements (CRCP) were initially constructed on the Interstate system in Indiana in the 1960's and 1970's. However, CRCP in Indiana was constructed without drainable subbases and without underdrain systems. This pavement had inherent subgrade problems, began pumping, and consequently "punch-outs" occurred. Due to its problematic history, CRCP is not a preferred pavement type. However, use of CRCP can still be considered where traffic and economic considerations show it is the best alternative for a project. See Section 607-2.02 for CRCP. See INDOT *Standard Specifications* Division 500 for concrete pavement.

602-3.03(01) Drainage Layer for PCCP

A drainage layer provides a conduit to remove water that enters the pavement system and should be used for pavement where underdrains are required.

1. Aggregate Drainage Layer. A permeable compacted aggregate drainage layer may be used where the existing conditions are suited for the use of aggregate as a drainage material or where a permeable compacted aggregate drainage layer is recommended by the INDOT Central Office Pavement Design Reviewer or District Pavement Engineer. See INDOT *Standard Specifications* Section 302 for subbase and aggregate drainage layers

2. Open Graded Asphalt Layer (Asphalt Treated Permeable Base). The open-graded layer will be placed upon a separation layer. INDOT's typical lay rate for open-graded layers is 100 lb/yd² per inch and is typically placed at 250 lb/yd² (2.5 in.) to 300 lb/yd² (3 in.)

602-3.03(02) Separation Layer for PCCP

A separation layer is placed to prevent pumping of erodible subgrade material into the drainage layer, inhibit the migration of fine particles, and inhibit the movement of water and water vapor from the subgrade material into the drainage layer.

1. Geotextile Separation Layer. A geotextile separation layer in accordance with INDOT *Standard Specifications* Section 918 may be used if the project conditions are suitable for the use of a geotextile separation layer. In accordance with INDOT *Standard Specifications* 6 in. of compacted aggregate should be placed on top of the geotextile layer.

2. Aggregate Separation Layer. A compacted aggregate separation layer consisting of dense graded compacted aggregate may be used if project conditions are best suited for an aggregate separation layer. See INDOT *Standard Specifications* Section 302 for subbase and aggregate separation layers

   Dense graded compacted aggregate is used under PCCP where a drainage layer is not used. A dense graded compacted aggregate provides for a stable working platform together with support for the pavement without drainage layers.

602-3.04 Composite Pavement

A composite pavement consists of multiple pavement material types, for example HMA over PCCP or PCCP over asphalt. A composite pavement should be designed in accordance with MEPDG using AASHTOWare Pavement ME software. The majority of INDOT pavements today are composite pavements. Special attention should be used when patching, widening, overlaying, or otherwise rehabilitating composite pavements.

A pavement designer should match the existing pavement composition, if possible when patching and widening composite pavements. Additional testing is usually required to determine the strength parameters of a composite pavement. Cores are always required to define the composition of a composite pavement.

602-3.05 Pavement Typical Sections

Figure No.	Title	Description
AGGREGATE PAVEMENT SECTIONS		
602-3DD	Aggregate Pavement	Detailing full-depth aggregate pavement

Figure No.	Title	Description
HMA PAVEMENT SECTIONS		
602-3A	Full-Depth HMA Pavement with Full-Depth Shoulder with Underdrain	Detailing full-depth asphalt pavement structures with asphalt shoulder and underdrains

Figure No.	Title	Description
HMA PAVEMENT SECTIONS		
602-3B	Full-Depth HMA Pavement with Full-Depth Shoulder with Underdrain for Interstates and High-Volume Roadways	Detailing full-depth asphalt pavement structures with asphalt shoulders, underdrains, and high truck volumes
602-3C	Full-Depth HMA Pavement with Full-Depth Shoulder without Underdrain	Detailing full-depth asphalt pavement with asphalt shoulder and no underdrains
602-3D	Full-Depth HMA Pavement with HMA on Compacted Aggregate Shoulder with Underdrain	Detailing full-depth asphalt pavement having an aggregate shoulder and underdrains
602-3E	Full-Depth HMA Pavement Example Sections	Determining typical layer thickness when detailing full-depth asphalt pavement sections
602-3F	Full-Depth HMA Pavement Drainage and Separation Layers	Determining typical drainage and separation layer thickness when detailing full-depth asphalt pavement sections having a drainage and separation layer
602-3G	Full-Depth HMA Pavement with HMA on Compacted Aggregate Shoulder without Underdrain	Designing full-depth asphalt pavement sections having composite pavement shoulders and no underdrains
602-3H	HMA on Compacted Aggregate Pavement	Detailing composite pavement structures
602-3 I	Typical HMA Pavement on Compacted Aggregate	Determining typical asphalt and aggregate layer thickness to be used for various composite pavement section thicknesses
602-3J	Full-Depth HMA Ramp	Designing full-depth asphalt exit and entrance ramps
602-3K	Underdrain for HMA Pavement with Full-Depth HMA Shoulder	Detailing underdrains, drainage layers, and separation layers for full-depth asphalt pavement with full-depth asphalt shoulders
602-3L	Underdrain for Full-Depth HMA Pavement with HMA on Compacted Aggregate Shoulder	Detailing underdrains, drainage layers, and separation layers for full-depth asphalt pavement with compacted aggregate shoulders

Figure No.	Title	Description
CONCRETE CURB & CURB AND GUTTER SECTIONS		
602-3M	Concrete Curb and Gutter Section for HMA Pavement with Underdrain, Curb on HMA Base	Detailing underdrains, drainage layers, and separation layers for full-depth asphalt pavement with curb and gutter placed on the HMA base layer
602-3N	Concrete Curb and Gutter Section for HMA Pavement with Underdrain, Curb on Drainage Layer	Detailing underdrains, drainage layers, and separation layers for full-depth asphalt pavement with curb and gutter placed on the drainage layer
602-3 O	Concrete Curb and Gutter Section for HMA Pavement without Underdrain	Detailing asphalt pavement sections with curb and gutter and no underdrains
602-3P	Concrete Curb and Gutter Section for PCCP Pavement without Underdrain	Detailing full-depth concrete pavement sections with standard curb and gutter and no underdrains
602-3Q	Modified Concrete Curb and Gutter Section for HMA Pavement on Compacted Aggregate without Underdrain	Detailing full-depth concrete pavement sections with modified curb and gutter and no underdrains
602-3R	Modified Concrete Curb and Gutter Section for HMA or PCCP Pavement with Underdrain	Detailing full-depth asphalt or concrete pavement sections with modified curb and gutter and no underdrains
602-3CC	HMA Pavement with Concrete Curb and no Underdrain	Detailing full-depth asphalt pavement with concrete curb only and no underdrains

Figure No.	Title	Description
PCC PAVEMENT SECTIONS		
602-3S	PCCP Section with PCC Shoulder	Detailing full-depth concrete pavement sections with full-depth concrete shoulder
602-3T	PCCP Section with HMA Outside Shoulder	Detailing full-depth concrete pavement sections with asphalt shoulder
602-3U	PCCP with Concrete Curb	Detailing full-depth concrete pavement sections with concrete curb
602-3V	PCCP Ramp	Detailing full-depth concrete ramp pavement sections

UNDERDRAIN SECTIONS		
602-3W	Underdrain for PCCP	Detailing underdrains, drainage layers, and separation layers for concrete pavement with concrete shoulders
602-3X	Underdrain for PCCP with HMA Shoulder	Detailing underdrains, drainage layers, and separation layers for concrete pavement with asphalt shoulders
602-3Y	Underdrain for Curbed PCCP	Detailing underdrains, drainage layers, and separation layers for concrete pavement with curb
602-3BB	Retrofit Underdrain	Detailing the placement of retrofit underdrains

LONGITUDINAL JOINTS, SAFETY EDGE, AND PARKING LOTS		
602-3Z	Longitudinal Joint Options and D-1 Contraction Joint Spacing	Detailing the placement of longitudinal joints in full-depth concrete pavement
602-3AA	Safety Edge	Detailing safety edges for asphalt and concrete pavement sections
602-3EE	Parking Lot Pavement Sections	Detailing parking lot sections

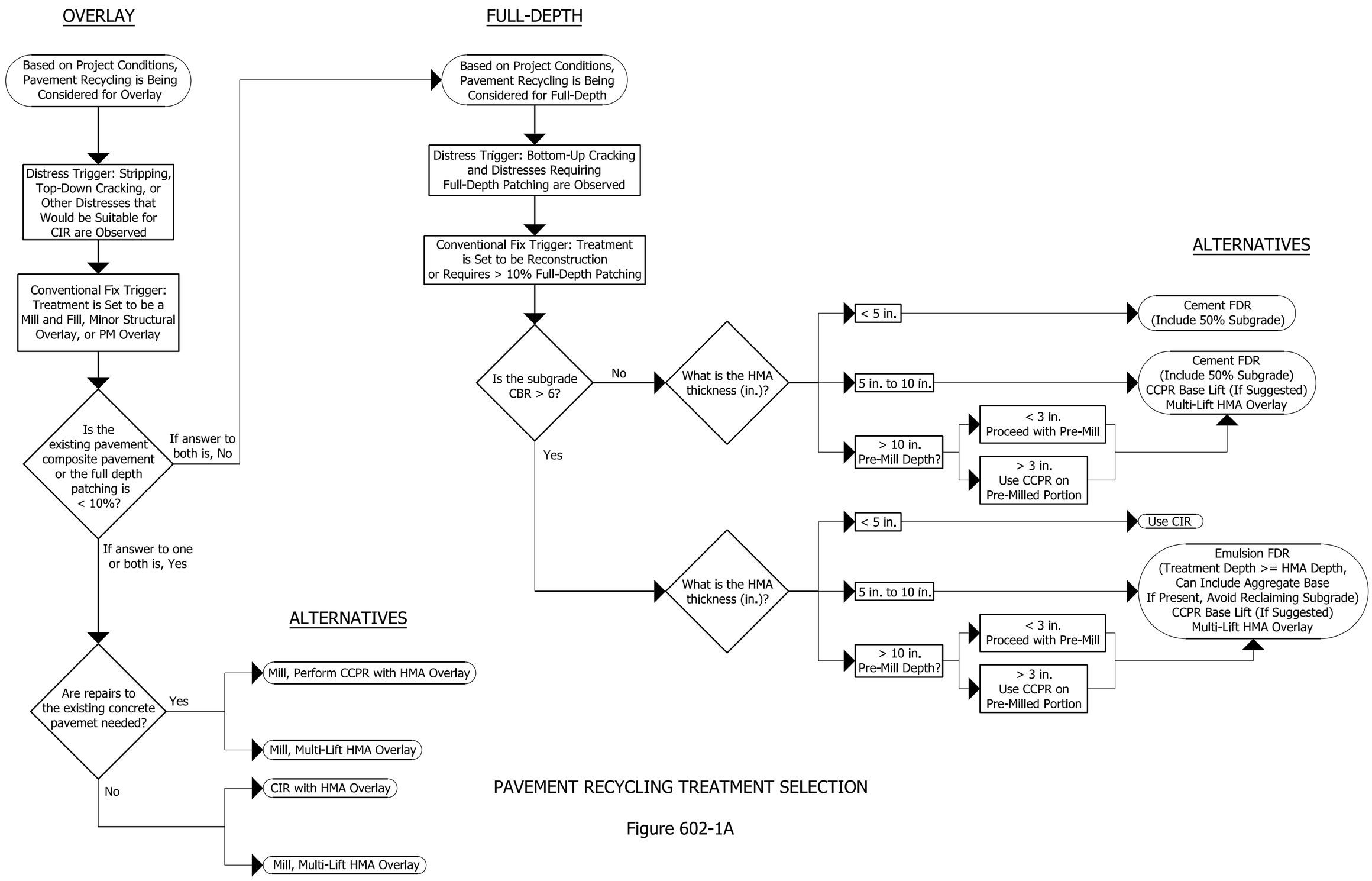

PAVEMENT RECYCLING TREATMENT SELECTION

Figure 602-1A

Treatment	AADT [1]	Pavement Distresses	Rutting, in.	IRI	Friction Treatment?	Surface Aging	Longitudinal Joint
Crack Seal	Any	Low to Moderately Sever Transverse or Longitudinal Joints/Reflective Cracks	n/a	n/a	No	n/a	n/a
Crack Fill	Any	Low to Moderately Severe Longitudinal Cold Joint, Reflective & Edge Cracking Plus Low Severity Block Cracking	n/a	n/a	No	n/a	n/a
Fog Seal	< 5,000 [2]	Low-Severity Environmental Surface Cracks	n/a	n/a	No [3]	Retards aging and oxidation; arrests minor raveling	Required on surface layer over longitudinal joint 24-in. in width
Seal Coat	< 5,000 [2]	Low-Severity Environmental Surface Cracks	< 0.25 [4]	n/a [4]	Yes	Retards aging, oxidation, and minor raveling	n/a
Microsurface	Any	Low-Severity Surface Cracks	Any	< 130	Yes	Retards aging, oxidation, and minor raveling	n/a
UBWC	Any	Low to Moderately Severe Surface Cracks	< 0.25	< 140	Yes	Retards aging, oxidation, and moderate raveling	n/a
HMA Inlay	Any	Low to Moderately Severe Surface Cracks	Any	< 150	Yes	Replaces aged, oxidized, or raveled surface	n/a

HMA PREVENTIVE MAINTENANCE TREATMENTS

Figure 602-1B (Page 1 of 2)

(rev. Sep. 2020)

Treatment	AADT[1]	Pavement Distresses	Rutting, in.	IRI	Friction Treatment?	Surface Aging	Longitudinal Joint
Thin HMA Overlay w/Profile Milling	Less than 10 million, ESAL	Low to Moderately Severe Surface Cracks (For use on Category 1, 2, or 3 roads only)	< 0.25	< 150	Yes	Arrest aging, oxidation, and moderate raveling	n/a
HMA Overlay	Any	Low to Moderately Severe Surface Cracks	Any	< 150	Yes	Arrests aging, oxidation, and moderate raveling	n/a
Hot In-Place Recycling (HIR)	<5,000 [2]	Low-Severity Surface Cracks	<0.25	<150	Yes	Arrests aging, oxidation, and moderate raveling	n/a
Cold In-Place Recycling (CIR)	Any	Low to Severe Cracking and Stripped HMA Layers	Any	Any	Yes	Replaces aged, oxidized, or raveled surface	n/a

Notes:

[1] For mainline pavement
[2] Unless traffic can be adequately controlled
[3] Treatment may reduce skid numbers
[4] Treatment does not address

HMA PREVENTIVE MAINTENANCE TREATMENTS

Figure 602-1B (Page 2 of 2)

(rev. Sep. 2020)

Treatment	AADT [1]	Pavement Distresses	Rutting, in.	IRI	Friction Treatment?	Surface Aging
Crack Seal	Any	Midpanel cracks with aggregate interlock	n/a	n/a	No	n/a
Saw and Seal Joints	Any	> 10% of joints with missing sealant, otherwise joints in good condition	n/a	n/a	No	n/a
Retrofit Load Transfer	Any	Low to medium severity mid-panel cracks; pumping or faulting at joints < 0.25 in.	n/a	n/a	No	n/a
Surface Profiling	Any	Faulting < 0.25 in.; poor ride; friction problems	n/a	n/a	Yes	n/a
Partial-Depth Patch	Any	Localized surface deterioration	n/a	n/a	Yes	n/a
Joint Repair	Any	Surface deterioration located around a transverse or longitudinal joint	n/a	n/a	No	n/a
Full-Depth Patch	Any	Deteriorated joints; faulting ≥ 0.25 in.; cracks	n/a	n/a	No	n/a
Underseal	Any	Pumping; voids under pavement	n/a	n/a	No	n/a
Slab Jacking	Any	Settled slabs	n/a	n/a	No	n/a

Notes:

[1] On mainline pavement

PCCP PREVENTIVE MAINTENANCE TREATMENTS

Figure 602-1C

(rev. Sep. 2020)

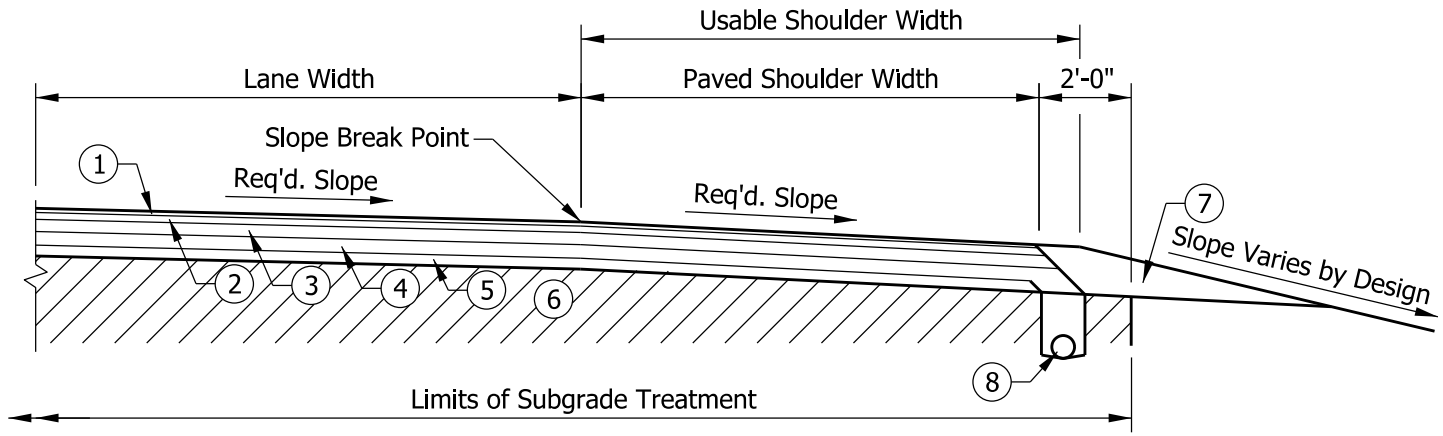

NOTES:

* 1 ___ lb/yd² HMA Surface
* 2 ___ lb/yd² HMA Intermediate
* 3 ___ lb/yd² HMA Base
4 ___ Drainage Layer
5 ___ Separation Layer
6 Subgrade Treatment, Type _____
7 Variable-Depth Compacted Aggregate
8 Underdrain. See Figure 602-3K for detail.

* See Figure 602-3E for lay rate.

9. Safety edge as required for Surface and Intermediate layers. See Figure 602-3AA for detail.
10. Longitudinal joint adhesive required for Surface and Intermediate layers.
11. Configuration for median shoulder is the same as for an outside shoulder except width and slope.

FULL-DEPTH HMA PAVEMENT WITH FULL-DEPTH SHOULDER WITH UNDERDRAIN

Figure 602-3A

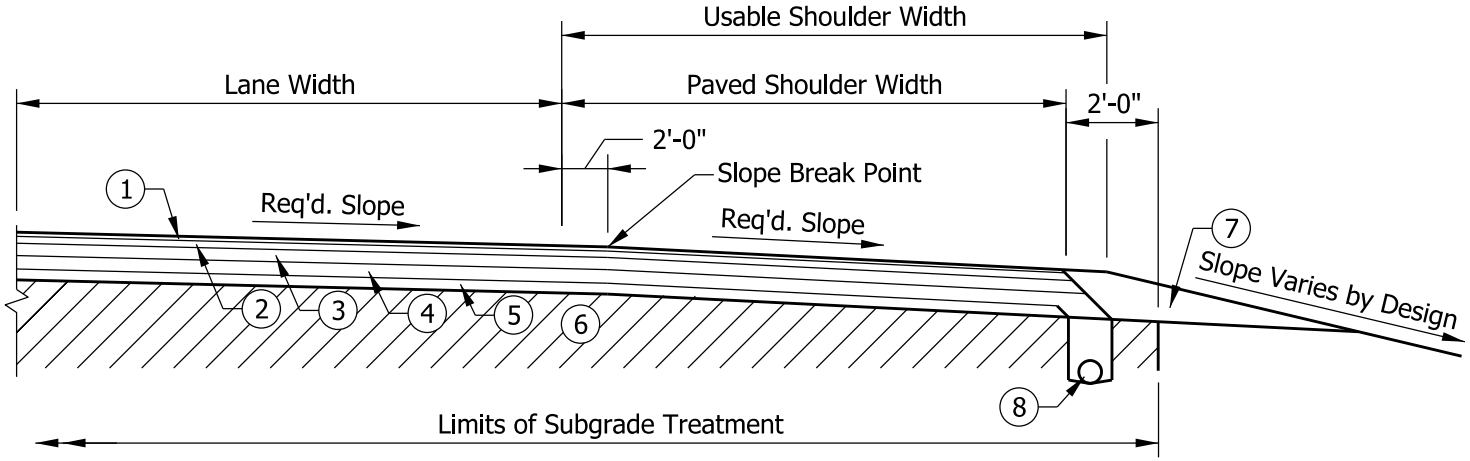

NOTES:

* 1 ___ lb/yd² HMA Surface
* 2 ___ lb/yd² HMA Intermediate
* 3 ___ lb/yd² HMA Base
4 ___ Drainage Layer
5 ___ Separation Layer
6 Subgrade Treatment, Type _____
7 Variable-Depth Compacted Aggregate
8 Underdrain. See Figure 602-3K for detail.

* See Figure 602-3E for lay rate.

9. Safety edge as required for Surface and Intermediate layers. See Figure 602-3AA for detail.
10. Longitudinal joint adhesive required for Surface and Intermediate layers.
11. Configuration for median shoulder is the same as for an outside shoulder when inside shoulder is greater than 4 ft. When inside shoulder is less than 4 ft the slope shall match that of the mainline.

FULL-DEPTH HMA PAVEMENT WITH FULL-DEPTH SHOULDER WITH UNDERDRAIN FOR INTERSTATES AND HIGH VOLUME ROADWAYS

Figure 602-3B

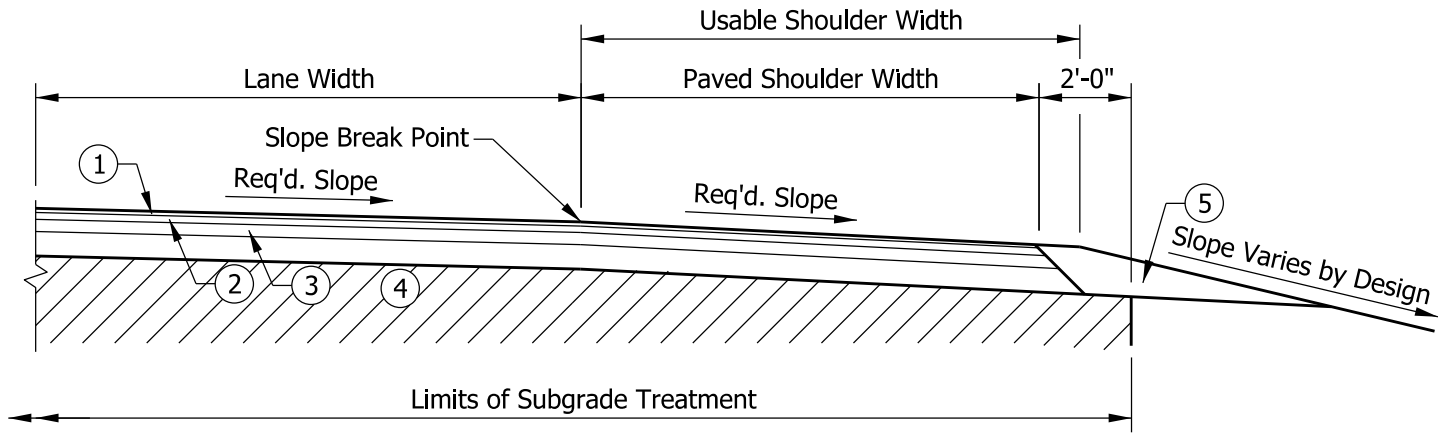

NOTES:

* 1 ___ lb/yd² HMA Surface
* 2 ___ lb/yd² HMA Intermediate
* 3 ___ lb/yd² HMA Base
4 Subgrade Treatment, Type _____
5 Variable-Depth Compacted Aggregate

* See Figure 602-3E for lay rate.

6. Safety edge as required for Surface and Intermediate layers. See Figure 602-3AA for detail.
7. Longitudinal joint adhesive required for Surface and Intermediate layers.
8. Configuration for median shoulder is the same as for an outside shoulder except width and slope.
9. For Interstates and High Volume Roadways, the slope break point may be moved 2 ft. from the edge of the travel lane into the shoulder where the shoulder is greater than 4 ft. wide.

FULL-DEPTH HMA PAVEMENT WITH FULL-DEPTH SHOULDER WITHOUT UNDERDRAIN

Figure 602-3C

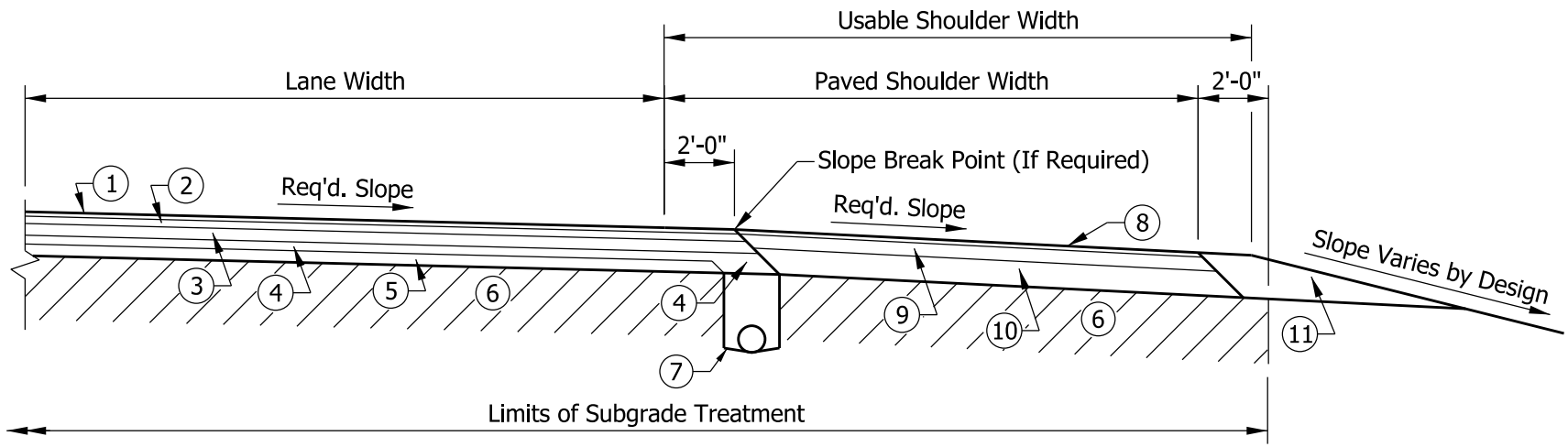

NOTES:

Mainline

1 ___ lb/yd² HMA Surface
2 ___ lb/yd² HMA Intermediate
3 ___ lb/yd² HMA Base
(* See Figure 602-3E for lay rate.)
4 ___ Drainage Layer
5 ___ Separation Layer
6 Subgrade Treatment, Type _____
7 Underdrain. See Figure 602-3L for detail.

Shoulders

8 165 lb/yd² HMA Surface 9.5 mm
9 495 lb/yd² Min. HMA Base 25.0 mm
10 Compacted Aggregate
(Depth equals Mainline HMA thickness minus 6 in.)
11 Variable-Depth Compacted Aggregate
12. Safety edge as required for top two HMA layers. See Figure 602-3AA for detail.
13. Longitudinal joint adhesive required for Surface and Intermediate layers.

FULL-DEPTH HMA PAVEMENT WITH HMA ON COMPACTED AGGREGATE SHOULDER WITH UNDERDRAIN

Figure 602-3D

HMA Thickness	Layer No.	Course	Lay Rate (lb/yd^2)	Aggregate Size, mm
7.0 in.*	1	Surface	165	9.5
	2	Intermediate	275	19.0
	3	Base	330	19.0
7.5 in.*	1	Surface	165	9.5
	2	Intermediate	275	19.0
	3	Base	385	19.0
8 in.*	1	Surface	165	9.5
	2	Intermediate	330	19.0
	3	Base	385	19.0
8.5 in.*	1	Surface	165	9.5
	2	Intermediate	385	19.0
	3	Base	385	19.0
9 in.*	1	Surface	165	9.5
	2	Intermediate	330	19.0
	3	Base	495	25.0
9.5 in.*	1	Surface	165	9.5
	2	Intermediate	330	19.0
	3	Base	550	25.0
10 in.*	1	Surface	165	9.5
	2	Intermediate	330	19.0
	3	Base	605	25.0
10.5 in.*	1	Surface	165	9.5
	2	Intermediate	385	19.0
	3	Base	605	25.0
11.0 in.*	1	Surface	165	9.5
	2	Intermediate	385	19.0
	3	Base	660	25.0
11.5 in.*	1	Surface	165	9.5
	2	Intermediate	330	19.0
	3	Base	385	19.0
	4	Base	385	19.0

FULL-DEPTH HMA PAVEMENT EXAMPLE SECTIONS

Figure 602-3E (Page 1 of 2)

HMA Thickness	Layer No.	Course	Lay Rate (lb/yd^2)	Aggregate Size, mm
12.0 in.*	1	Surface	165	9.5
	2	Intermediate	385	19.0
	3	Base	385	19.0
	4	Base	385	19.0
12.5 in.*	1	Surface	165	9.5
	2	Intermediate	330	19.0
	3	Base	440	25.0
	4	Base	440	25.0
13.0 in.*	1	Surface	165	9.5
	2	Intermediate	275	19.0
	3	Base	495	25.0
	4	Base	495	25.0
13.5 in.*	1	Surface	165	9.5
	2	Intermediate	330	19.0
	3	Base	495	25.0
	4	Base	495	25.0
14.0 in.*	1	Surface	165	9.5
	2	Intermediate	275	19.0
	3	Base	550	25.0
	4	Base	550	25.0

* Full-depth HMA Thicknesses listed are for surface, intermediate, and base layers only. Subbase, subgrade, and foundation layers that may be required are not listed in this table. Various alternatives for drainage and separation layer materials, if required for a project, are discussed in this chapter and are summarized in Figure 602-3F.

FULL-DEPTH HMA PAVEMENT EXAMPLE SECTIONS

Figure 602-3E (Page 2 of 2)

Layer Material Type	Minimum Thickness (in.)	Maximum Thickness (in.)
Aggregate	3.0	6.0
Open-Graded Asphalt	2.5	3.0
Cement-Treated Permeable Base	3.0	6.0
Synthetic Treated Permeable Base	NA	NA

DRAINAGE LAYER THICKNESSES

Layer Material Type	Minimum Thickness (in.)	Maximum Thickness (in.)
Aggregate	4.0	6.0
Geotextile	NA	NA

SEPERATION LAYER THICKNESSES

TYPICAL FULL-DEPTH HMA PAVEMENT DRAINAGE AND SEPARATION LAYERS

Figure 602-3F

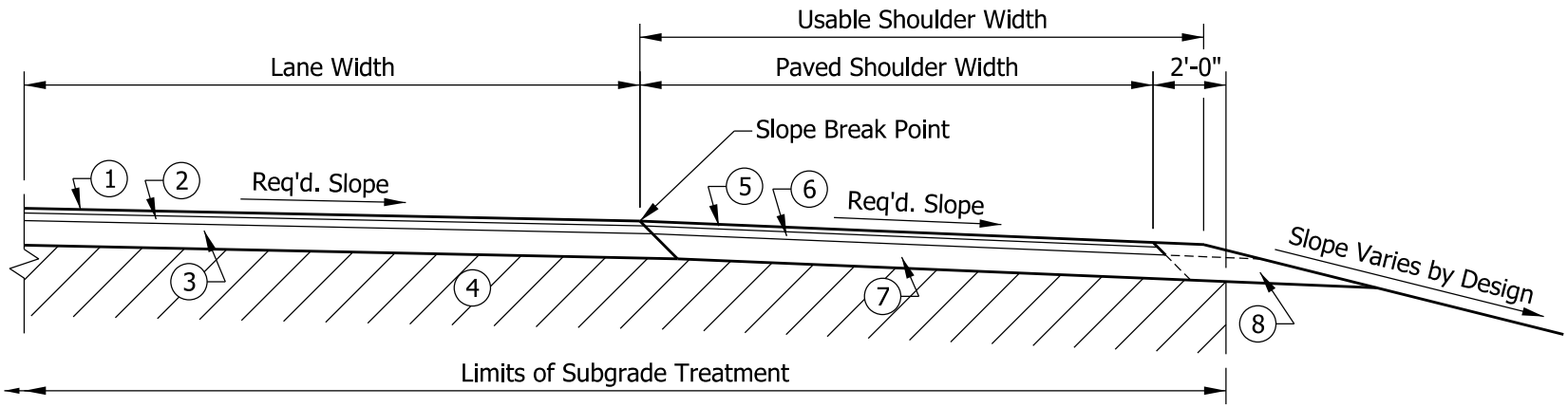

NOTES:

Mainline, Section with Shoulders

* 1 ___ lb/yd² HMA Surface
* 2 ___ lb/yd² HMA Intermediate
* 3 ___ lb/yd² min. HMA Base
4 Subgrade Treatment, Type _____

Shoulders

** 5 ___ lb/yd² HMA Surface
** 6 ___ lb/yd² HMA Intermediate
5, 6, and 7 may be replaced by 10 in. equivalent thickness consisting of 4 in. Compacted Aggregate, No. 73 on 6 in. Compacted Aggregate, No. 53.
7 5.5 in. Compacted Aggregate, No. 53.
Depth equals Mainline HMA thickness minus 4.5 in.
8 Variable-Depth Compacted Aggregate

9. Safety edge as required for Surface and Intermediate layers. See Figure 602-3AA for detail.
10. Longitudinal joint adhesive required for Surface and Intermediate layers.

* See Figure 602-3E for lay rate.

** Surface and Intermediate layer thickness should match mainline Surface and Intermediate thickness

FULL-DEPTH HMA PAVEMENT WITH HMA ON COMPACTED AGGREGATE SHOULDER WITHOUT UNDERDRAIN

Figure 602-3G

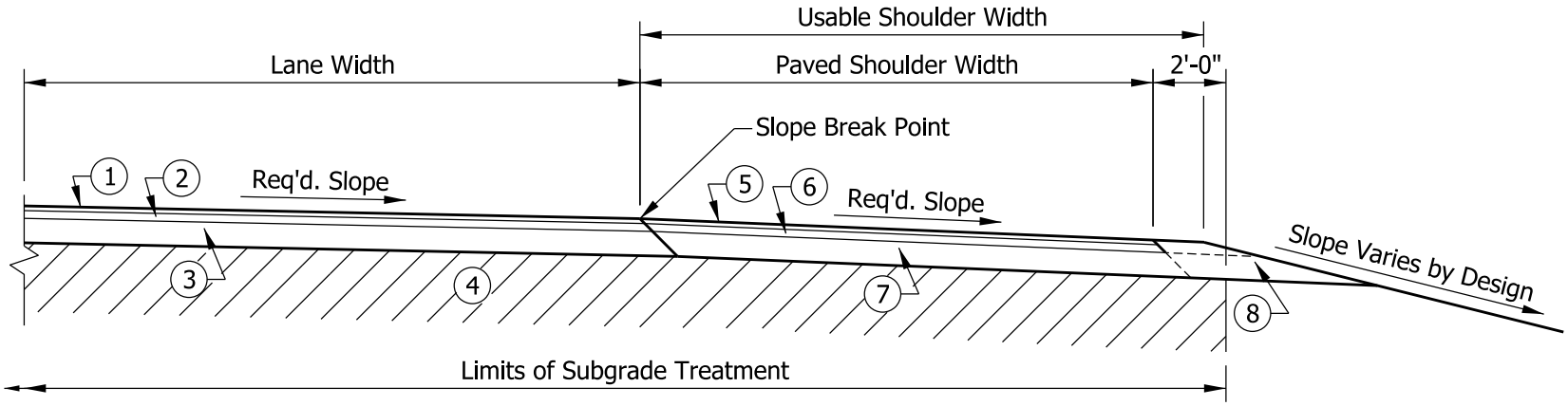

NOTES:

Mainline, Section with Shoulders

* (1) ___ lb/yd² HMA Surface
* (2) ___ lb/yd² HMA Intermediate
* (3) ___ in. Compacted Aggregate, No. 53
(4) Subgrade Treatment, Type _____

Shoulders

* (5) ___ lb/yd² HMA Surface
* (6) ___ lb/yd² HMA Intermediate
(5), (6), and (7) may be replaced by 10 in. equivalent thickness consisting of 4 in. Compacted Aggregate, No. 73 on 6 in. Compacted Aggregate, No. 53.
(7) ___ in. Compacted Aggregate, No. 53. Depth equal to (3).
(8) Variable-Depth Compacted Aggregate

9. Safety edge as required for Surface and Intermediate layers. See Figure 602-3AA for detail.
10. Longitudinal joint adhesive required for Surface and Intermediate layers.

* See Figure 602-3 I for lay rate.

HMA ON COMPACTED AGGREGATE PAVEMENT

Figure 602-3H

HMA Pavement Thickness	Layer No.	Course	Lay Rate lb/yd^2	Aggregate Size, mm	Layer Thickness in.
4.0 inches	1	Surface	165	9.5	
	2	Intermediate	275	19.0	
	3	CA, No. 53	-	-	6"
4.5 inches	1	Surface	165	9.5	
	2	Intermediate	330	19.0	
	3	CA, No. 53	-	-	5.5"
4.5 inches	1	Surface	220	12.5	
	2	Intermediate	275	19.0	
	3	CA, No. 53	-	-	5.5"
5.0 inches	1	Surface	220	12.5	
	2	Intermediate	330	19.0	
	3	CA, No. 53	-	-	5"
5.5 inches	1	Surface	220	12.5	
	2	Intermediate	385	19.0	
	3	CA, No. 53	-	-	4.5"
6.0 inches	1	Surface	220	12.5	
	2	Intermediate	440	25.0	
	3	CA, No. 53	-	-	4"

TYPICAL HMA PAVEMENT ON COMPACTED AGGREGATE

Figure 602-3 I

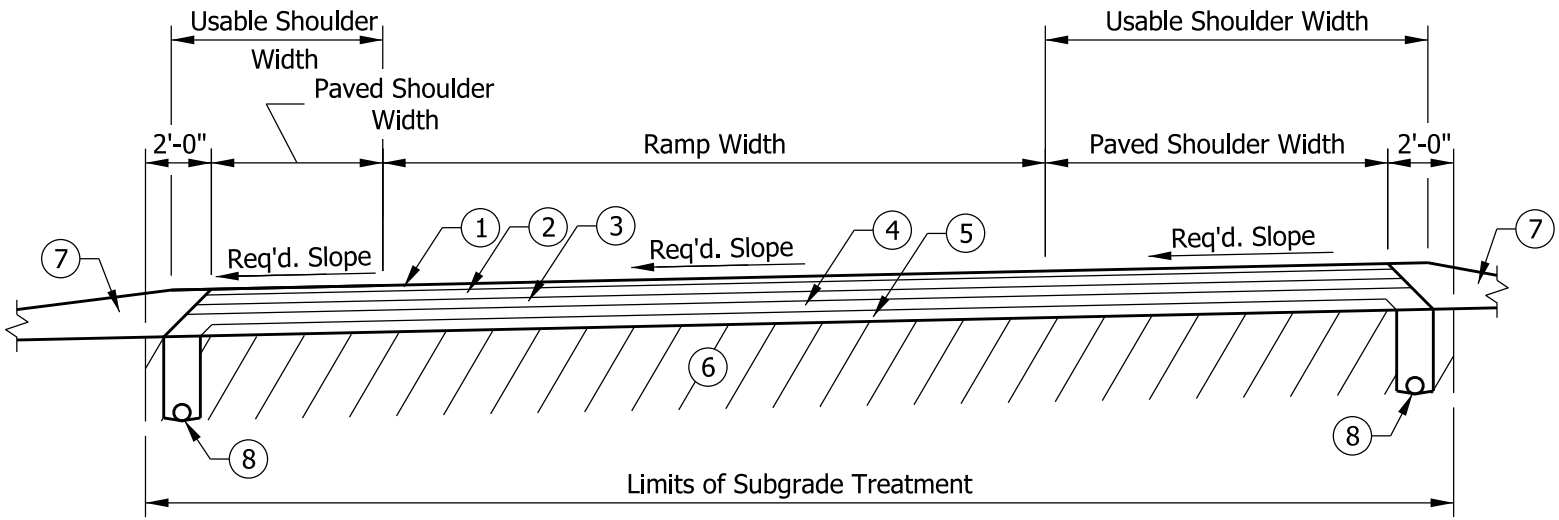

NOTES:

Ramp

* (1) ___ lb/yd² HMA Surface
* (2) ___ lb/yd² HMA Intermediate
* (3) ___ lb/yd² HMA Base
(4) ___ Drainage Layer
(5) ___ Separation
(6) Subgrade Treatment, Type _____
(7) Variable-Depth Compacted Aggregate
(8) Underdrain, See Figure 602-3K for detail.

9. Safety edge as required for Surface and Intermediate layers. See Figure 602-3AA for detail.
10. Longitudinal joint adhesive required for Surface and Intermediate layers.
11. Longitudinal Joint or Longitudinal Contruction Joint, 14-ft max. spacing between two Longitudinal Joints.

* See Figure 602-3E for lay rate.

FULL-DEPTH HMA RAMP

Figure 602-3J

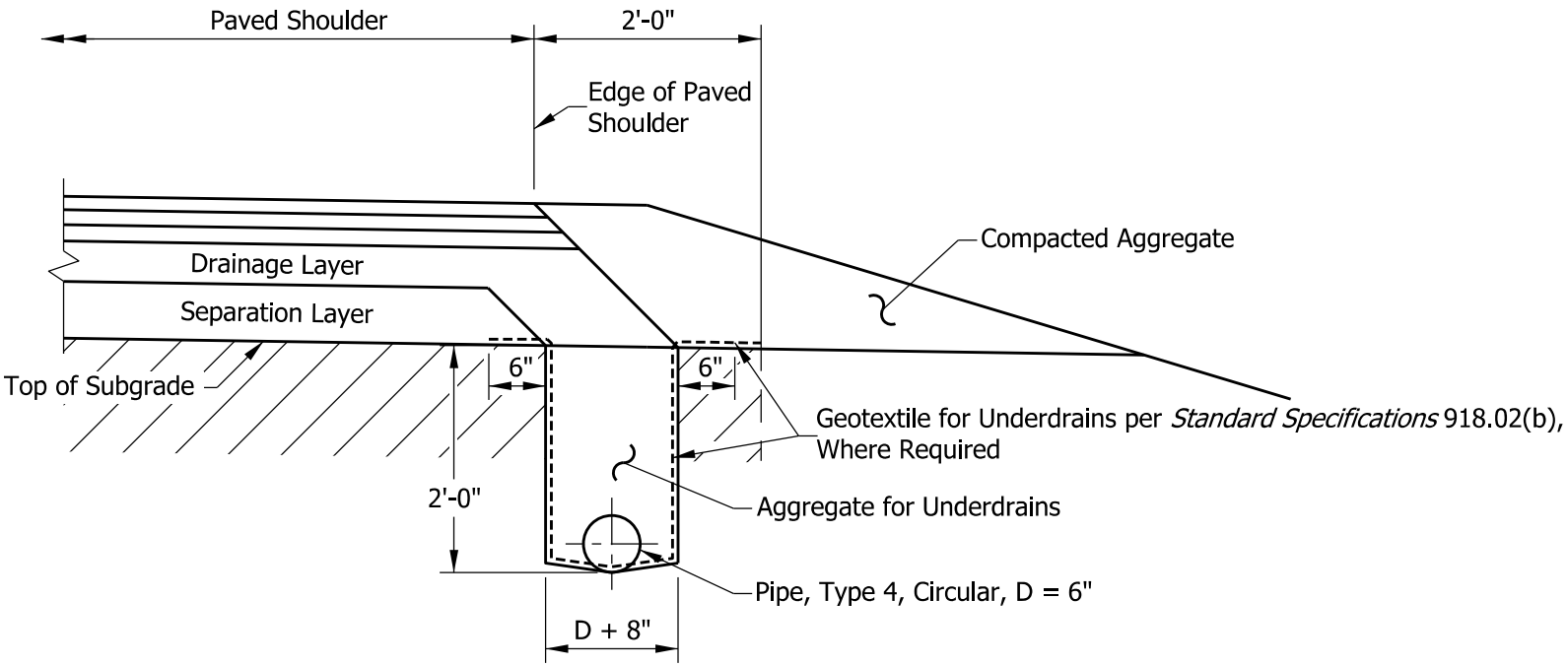

NOTE:

- Configuration for median shoulder is the same as for an outside shoulder.
- Layer thicknesses are not to scale. Apparent thicknesses shown may not be representative of the selected drainage or seperation layer

UNDERDRAIN FOR HMA PAVEMENT WITH FULL-DEPTH HMA SHOULDER

Figure 602-3K

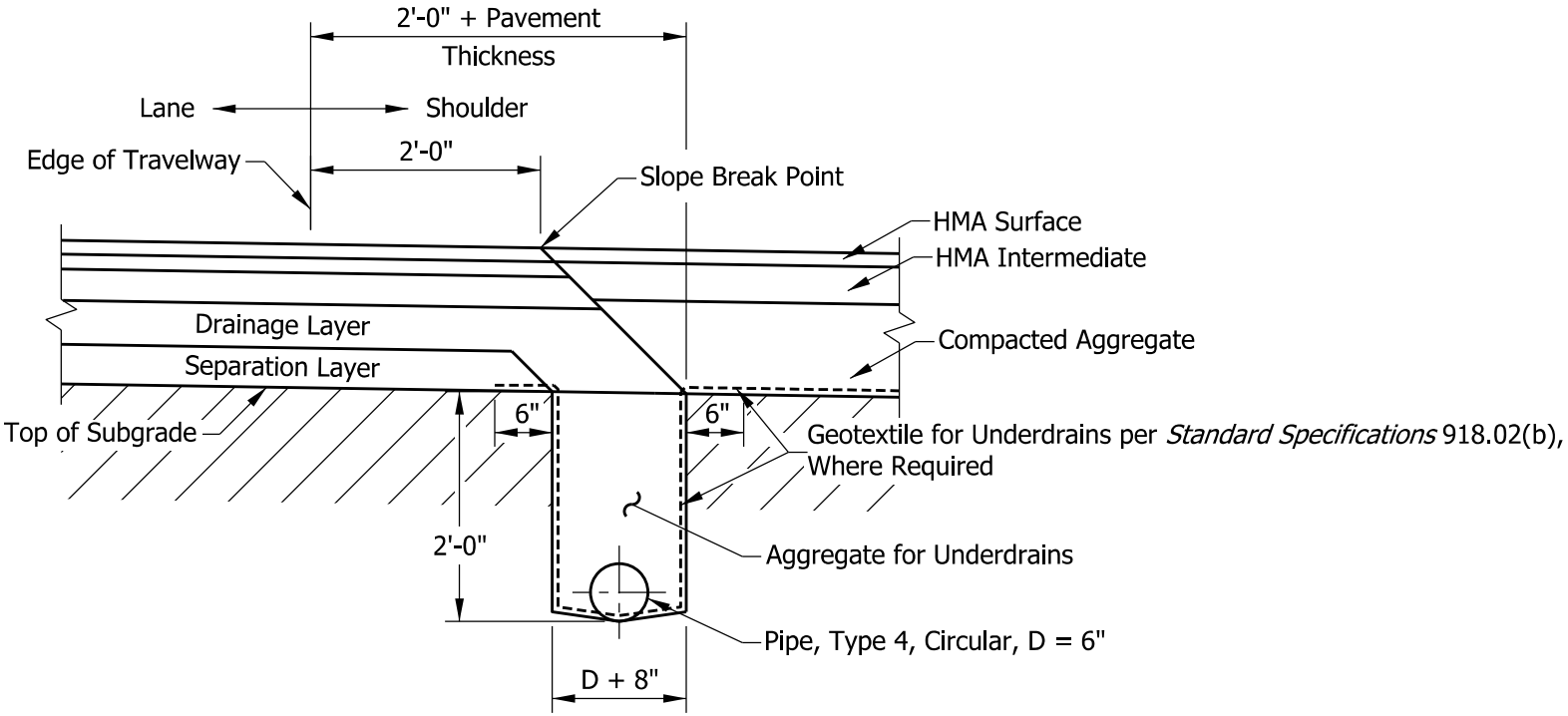

NOTE:

- Configuration for median shoulder is the same as for an outside shoulder.
- Layer thicknesses are not to scale. Apparent thicknesses shown may not be representative of the selected drainage or seperation layer

UNDERDRAIN FOR FULL-DEPTH HMA PAVEMENT WITH HMA ON COMPACTED AGGREGATE SHOULDER

Figure 602-3L

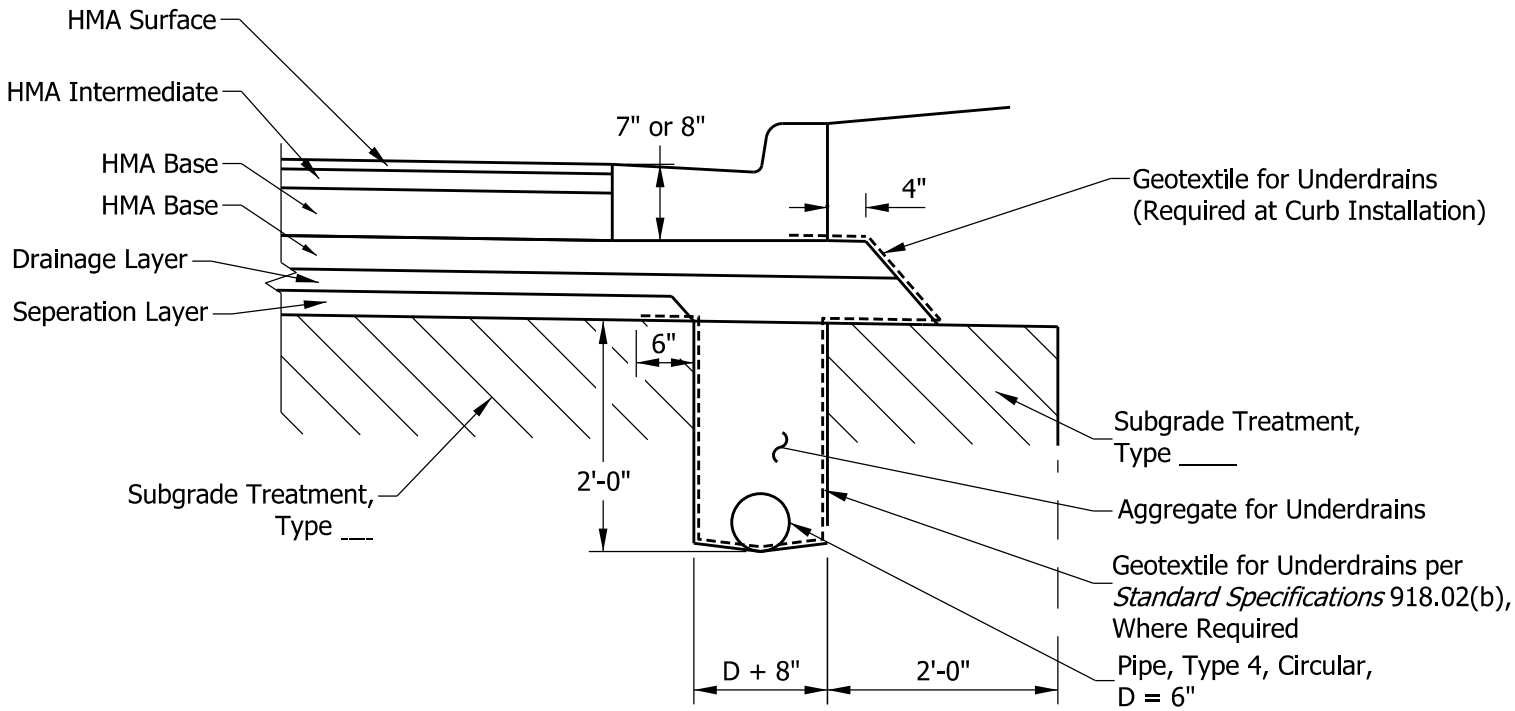

CONCRETE CURB AND GUTTER SECTION FOR HMA PAVEMENT
WITH UNDERDRAIN, CURB ON HMA BASE

Figure 602-3M

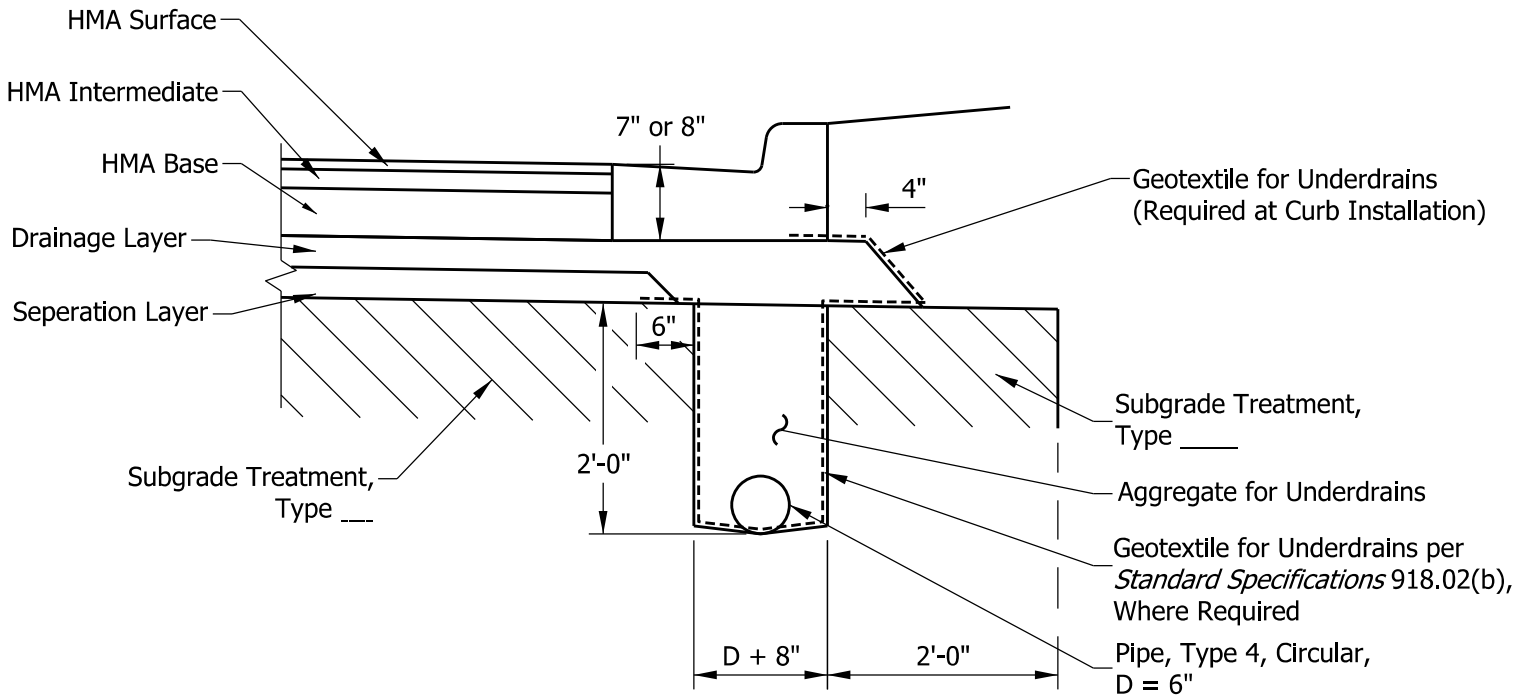

CONCRETE CURB AND GUTTER SECTION FOR HMA PAVEMENT
WITH UNDERDRAIN, CURB ON DRAINAGE LAYER

Figure 602-3N

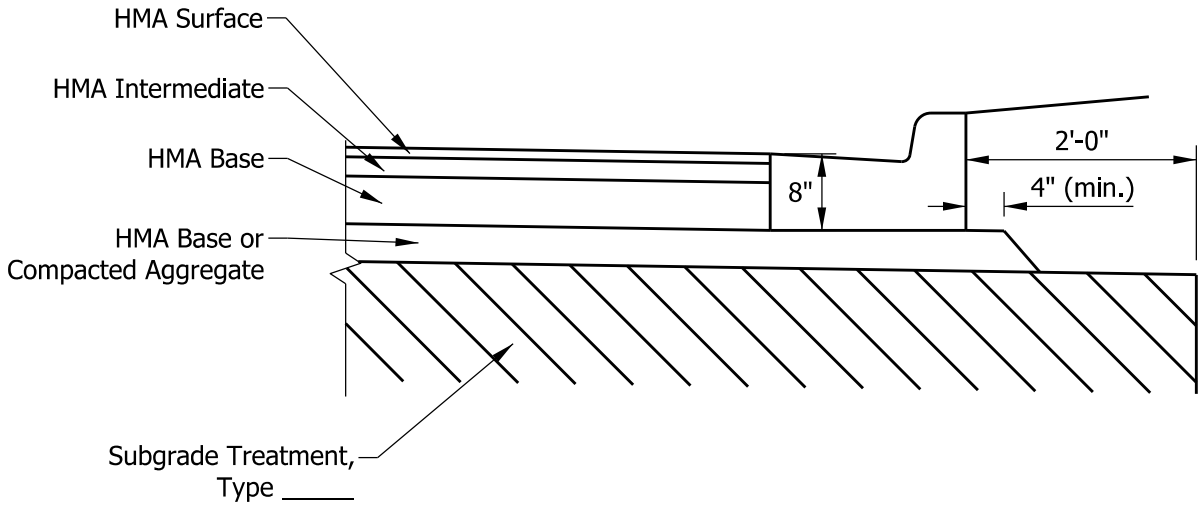

CONCRETE CURB AND GUTTER SECTION FOR HMA PAVEMENT
WITHOUT UNDERDRAIN

Figure 602-3 O

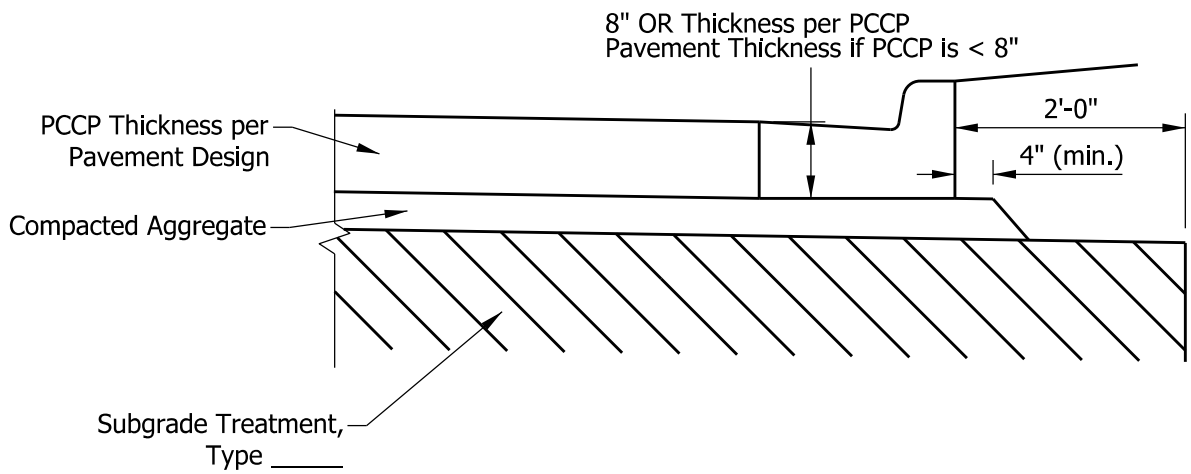

CONCRETE CURB AND GUTTER SECTION FOR PCCP PAVEMENT
WITHOUT UNDERDRAIN

Figure 602-3P

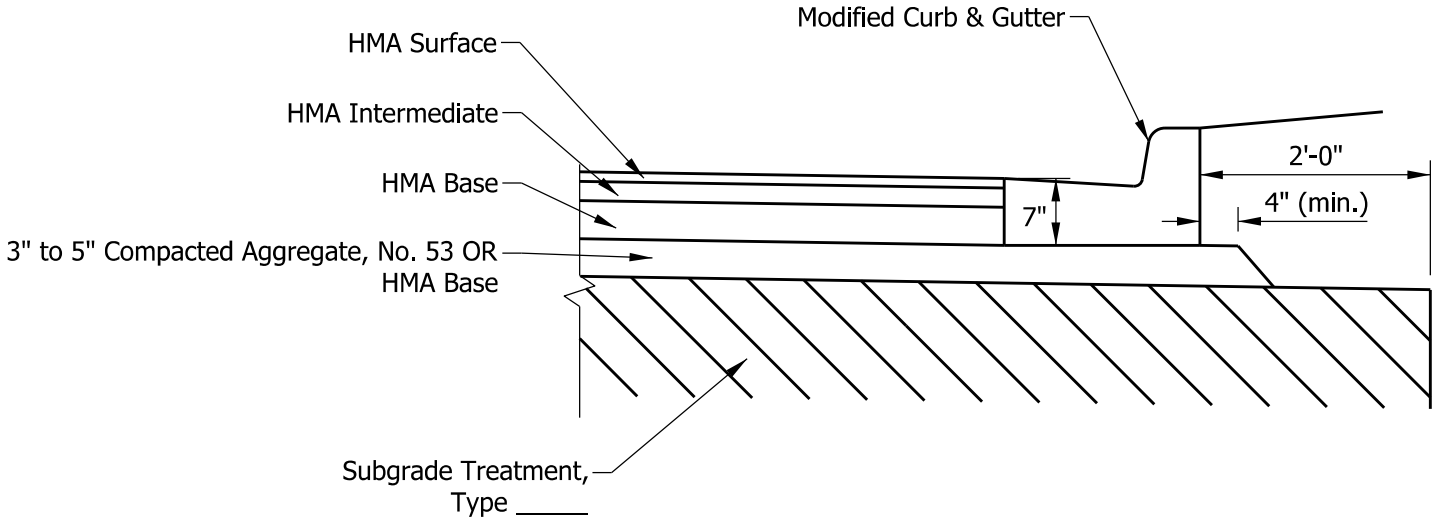

MODIFIED CONCRETE CURB AND GUTTER SECTION FOR HMA PAVEMENT ON COMPACTED AGGREGATE WITHOUT UNDERDRAIN

Figure 602-3Q

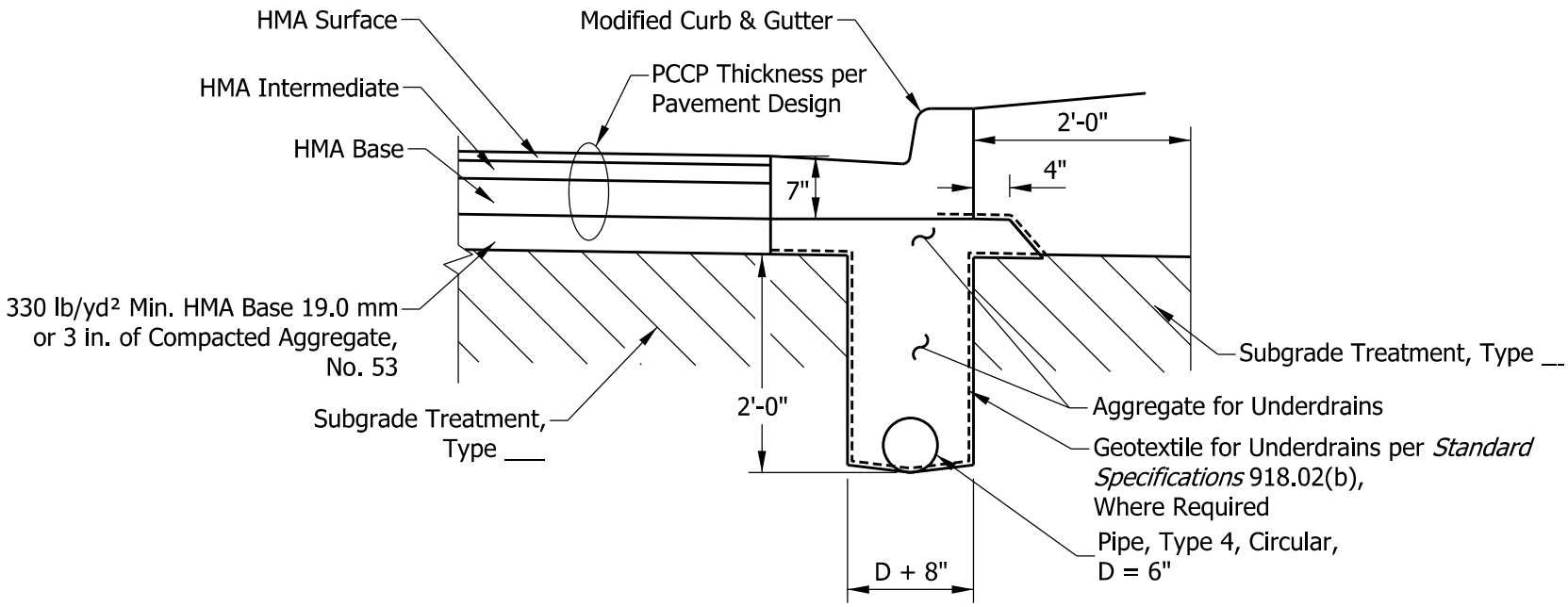

MODIFIED CONCRETE CURB AND GUTTER SECTION FOR HMA OR PCCP PAVEMENT WITH UNDERDRAIN

Figure 602-3R

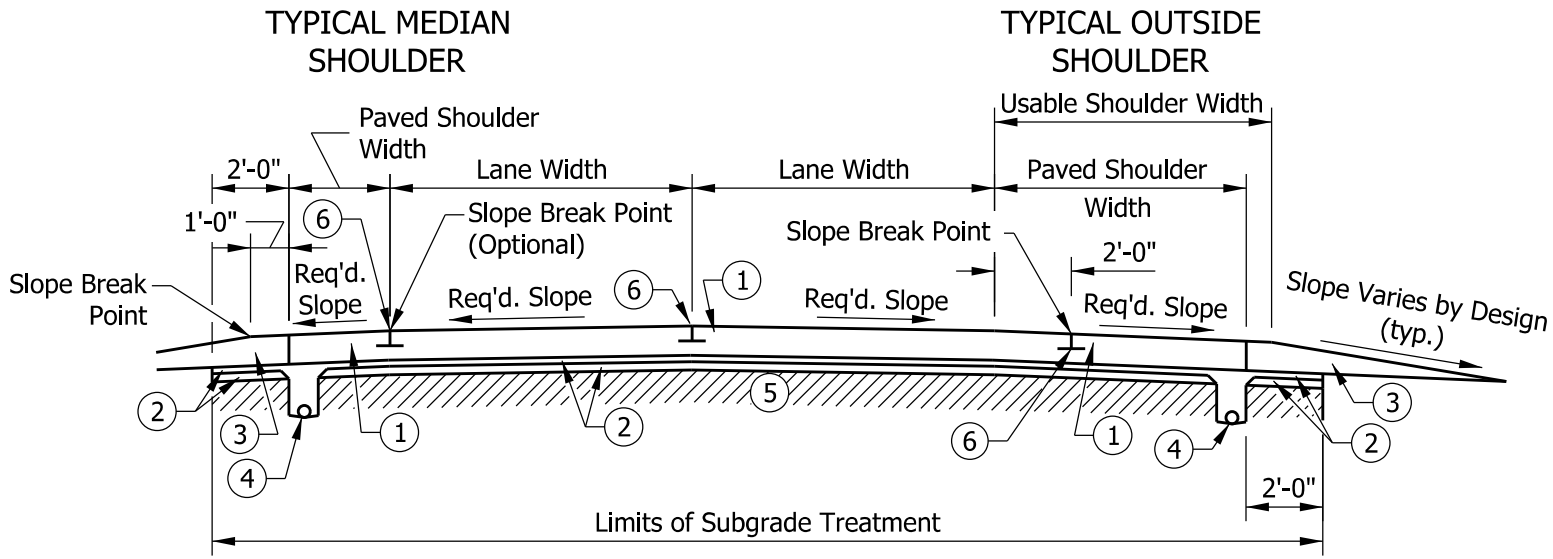

TYPICAL MEDIAN SHOULDER WITH BARRIER WALL

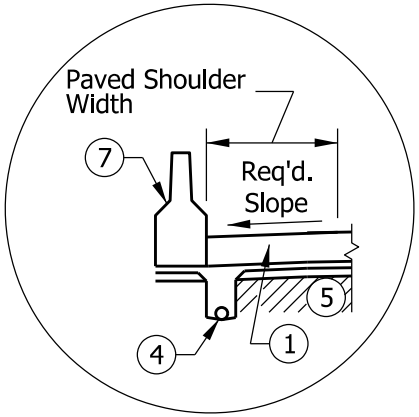

Mainline and Shoulders

1. PCCP
2. * Subbase for PCCP (3 in. Agg. Drainage Layer on 6 in. Agg. Separation Layer)
3. Variable-Depth Compacted Aggregate
4. Underdrain. See Figure 602-3W for detail.
5. Subgrade Treatment, Type _____
6. Longitudinal Joint or Longitudinal Construction Joint. See Figure 602-3Z for detail. (Widen Slab Option Shown)
7. Concrete Median Barrier
8. Safety edge as required. See Figure 602-3AA for detail.

* Where underdrains are not required, Dense Graded Subbase should be used.

PCCP SECTION WITH PCC SHOULDER

Figure 602-3S

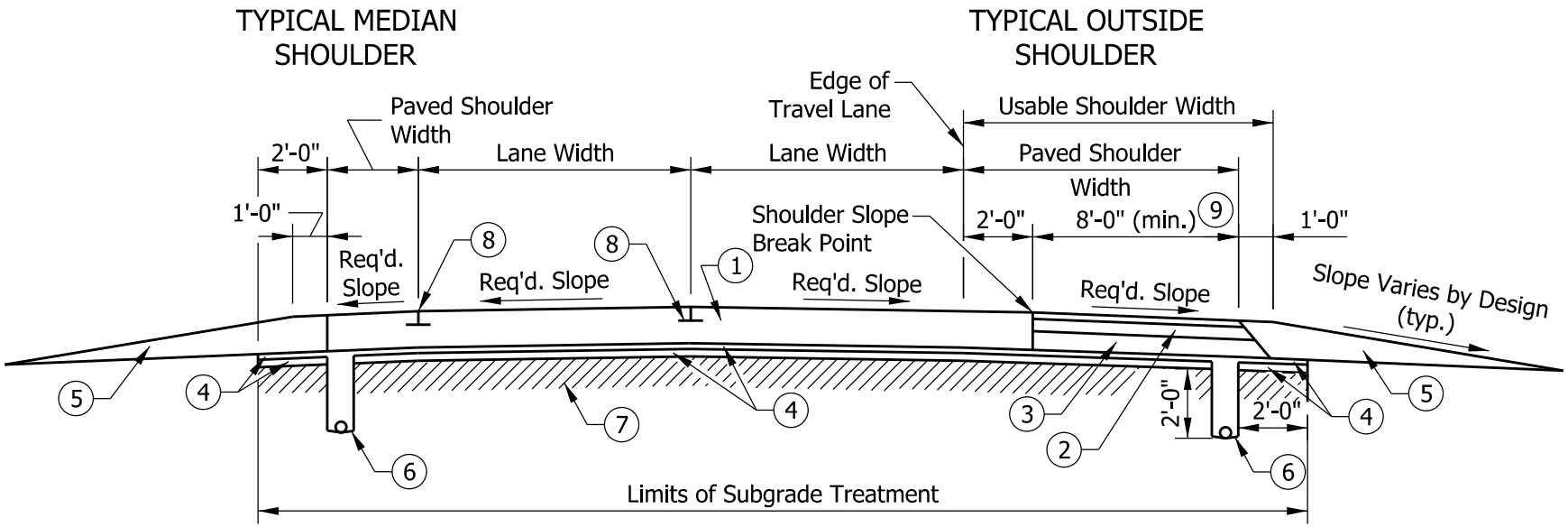

NOTES:

1. PCCP
2. 165 lb/yd² HMA Surface 9.5 mm
   275 lb/yd² HMA Intermediate 19.0 mm
3. HMA Base 25.0 mm
4. * Subbase for PCCP (3 in. Agg. Drainage Layer on 6 in. Agg. Separation Layer)
5. Variable-Depth Compacted Aggregate
6. Underdrain. See Figure 602-3X for detail.
7. Subgrade Treatment, Type ____
8. Longitudinal Joint or Longitudinal Construction Joint. See figure 602-3Z for detail.
9. For width < 8'-0", pavement type is per pavement design.
10. Safety edge as required. See Figure 602-3AA for detail.

* Where underdrains are not required, Dense Graded Subbase should be used.

PCCP SECTION WITH HMA OUTSIDE SHOULDER

Figure 602-3T

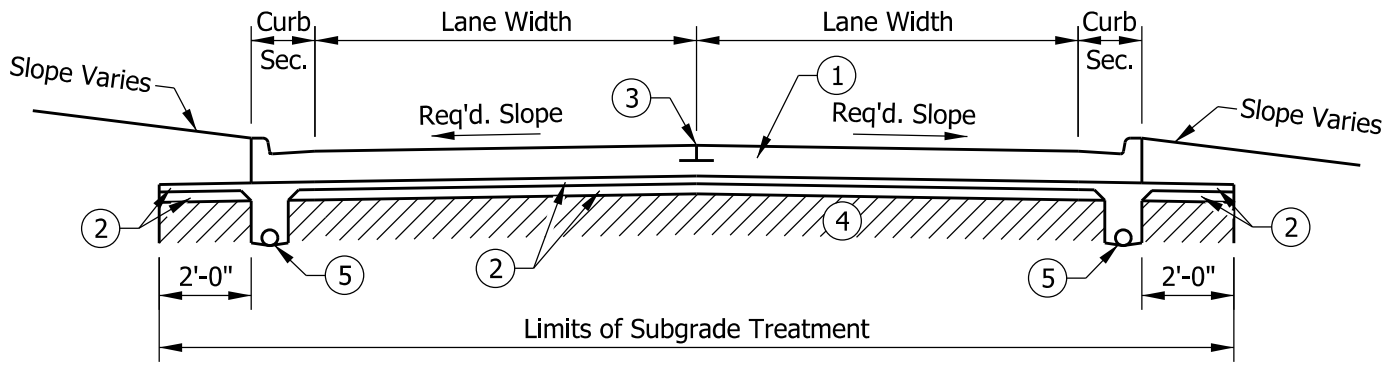

NOTES:

Mainline

1. PCCP
2. Subbase for PCCP (3 in. Agg. Drainage Layer on 6 in. Agg. Seperation Layer)
3. Longitudinal Joint or Longitudinal Construction Joint
4. Subgrade Treatment, Type ____
5. Underdrain. See Figure 602-3Y for detail.

PCCP WITH CONCRETE CURB

Figure 602-3U

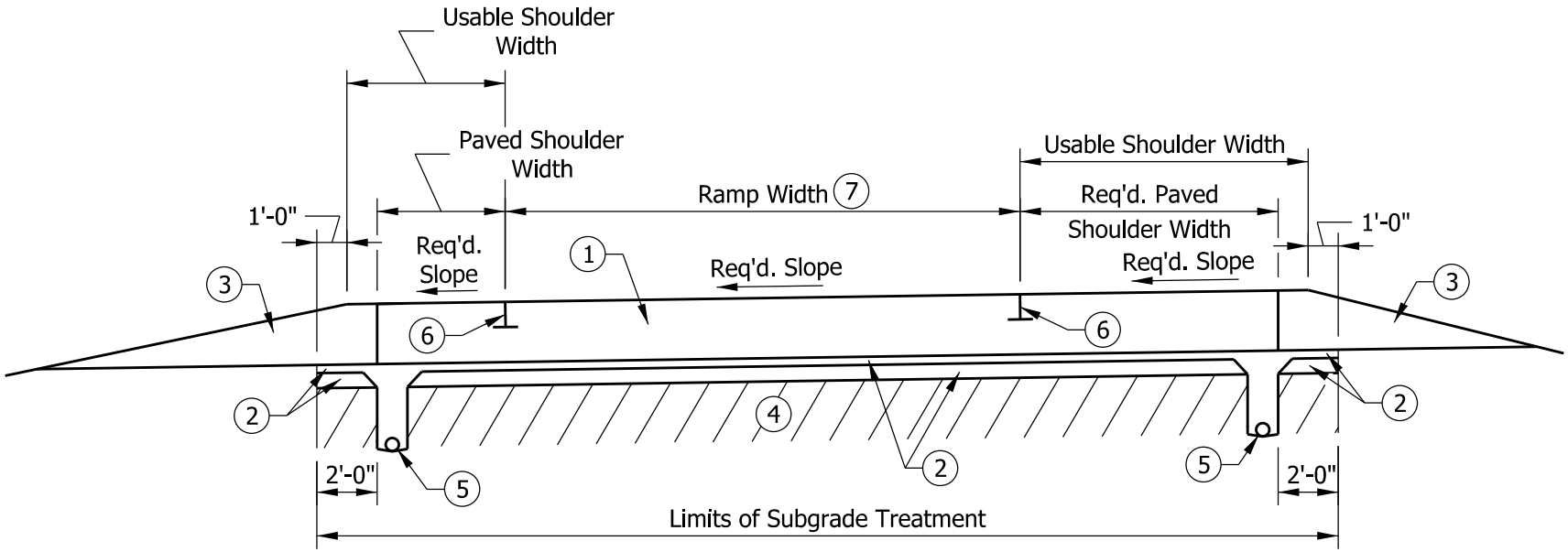

NOTES:

Ramp

1. PCCP
2. Subbase for PCCP (3 in. Agg. Drainage Layer on 6 in. Agg. Separation Layer)
3. Variable-Depth Compacted Aggregate, No. 53
4. Subgrade Treatment, Type ____
5. Underdrain. See Figure 602-3W for detail.
6. Longitudinal Joint or Longitudinal Construction Joint, 14-ft max. spacing between two Longitudinal Joints.
7. For multi-lane ramp, see Figure 602-3S.

PCCP RAMP

Figure 602-3V

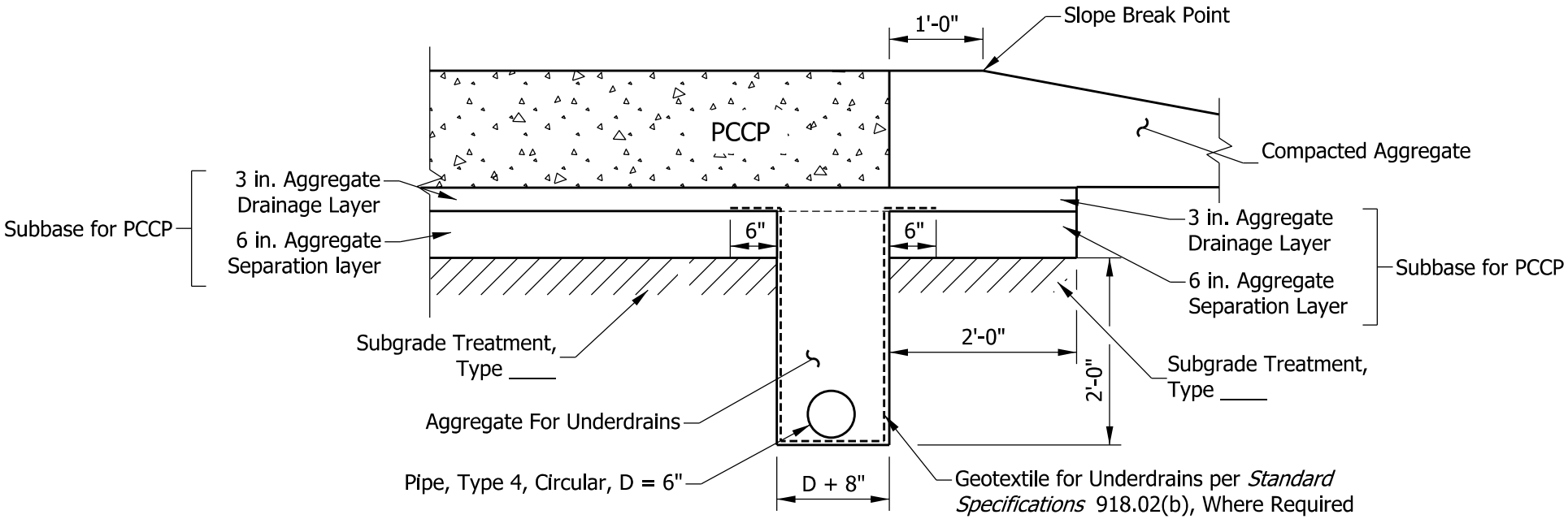

UNDERDRAIN FOR PCCP

Figure 602-3W

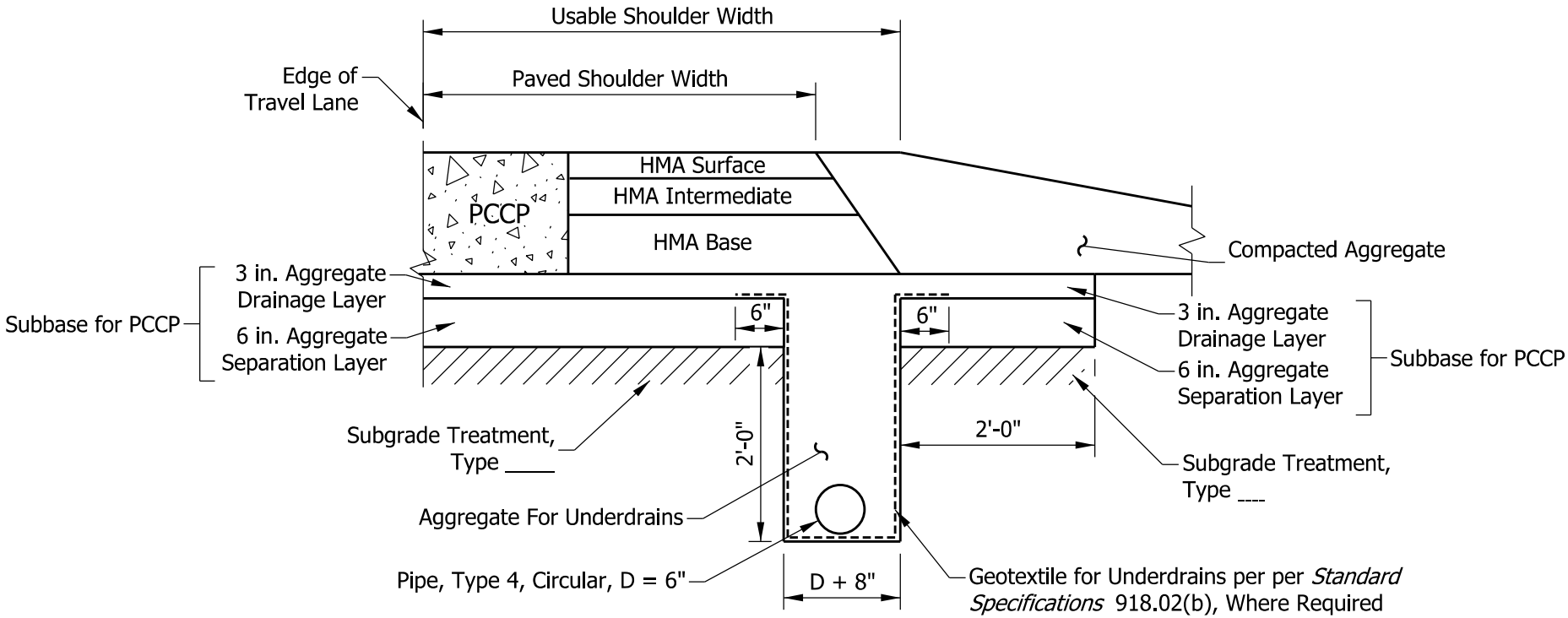

UNDERDRAIN FOR PCCP WITH HMA SHOULDER

Figure 602-3X

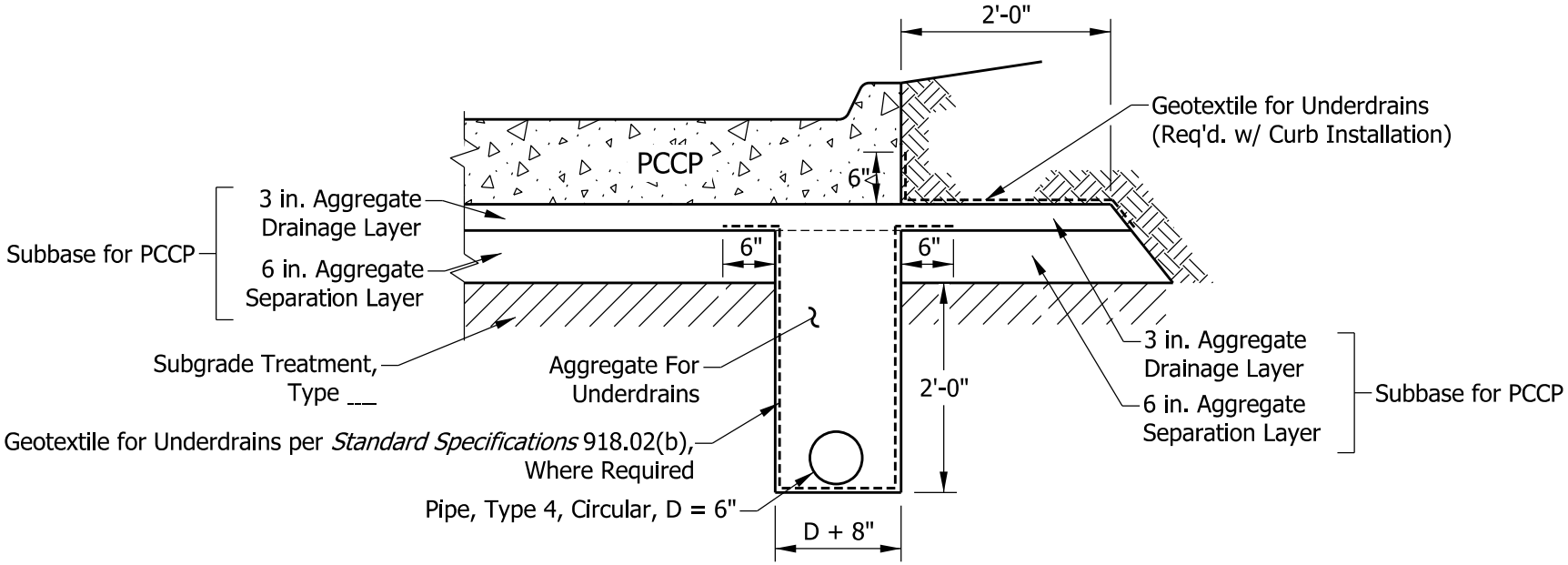

NOTE:

Standard Drawing E 605-CCIN-01 for curb detail.

UNDERDRAIN FOR CURBED PCCP

Figure 602-3Y

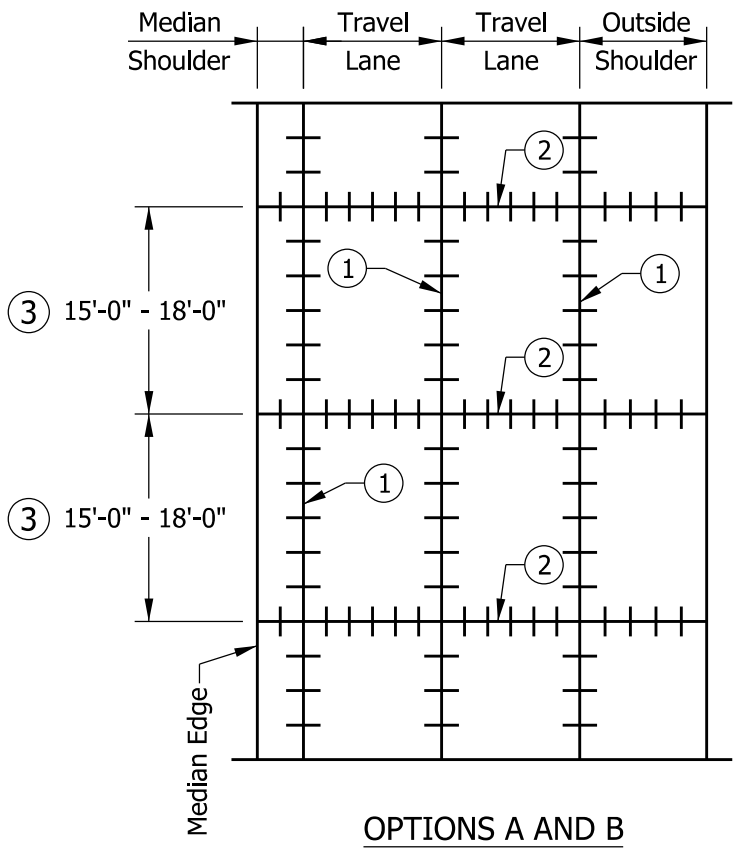

KEY:

1. Option A: Longitudinal Joint
   Option B: Longitudinal Constr. Joint

   If Widened slabs are used the joint shall be constructed 2 ft into the outside shoulder

2. Type D-1 Contraction Joint

3. Spacing between the D-1 Contraction Joints should be as specified in the Pavement Design.

MEDIAN EDGE OF CONCRETE PAVEMENT LONGITUDINAL JOINT OPTIONS

Figure 602-3Z

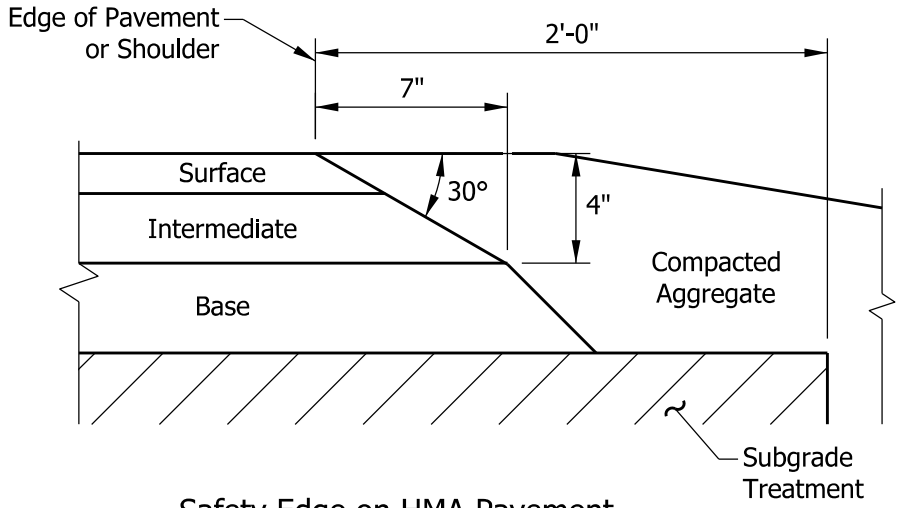

Safety Edge on HMA Pavement

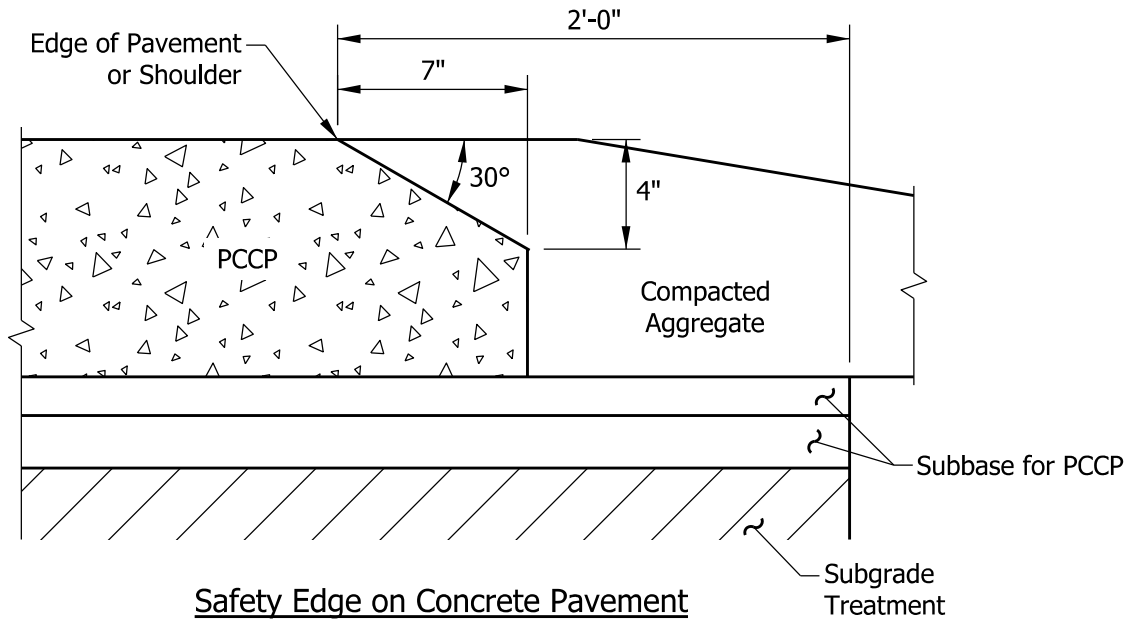

Safety Edge on Concrete Pavement

SAFETY EDGE

Figure 602-3AA

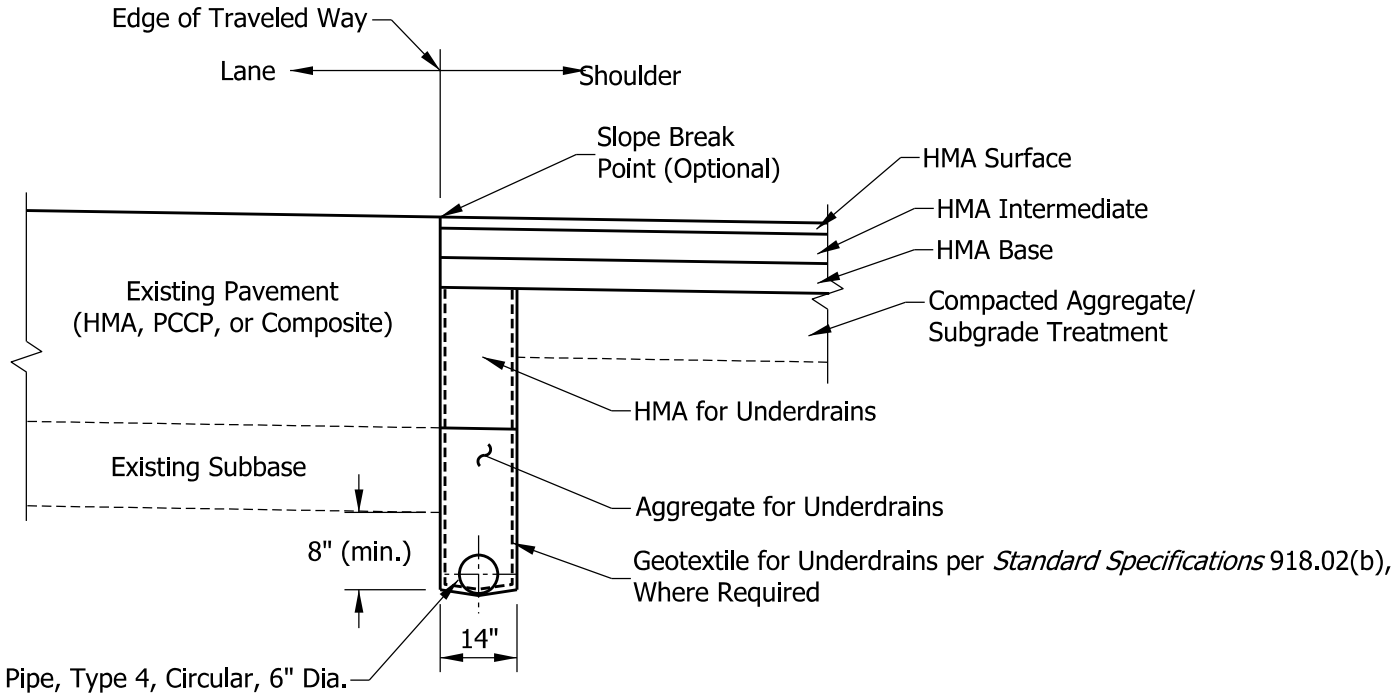

RETROFIT UNDERDRAIN

Figure 602-3BB

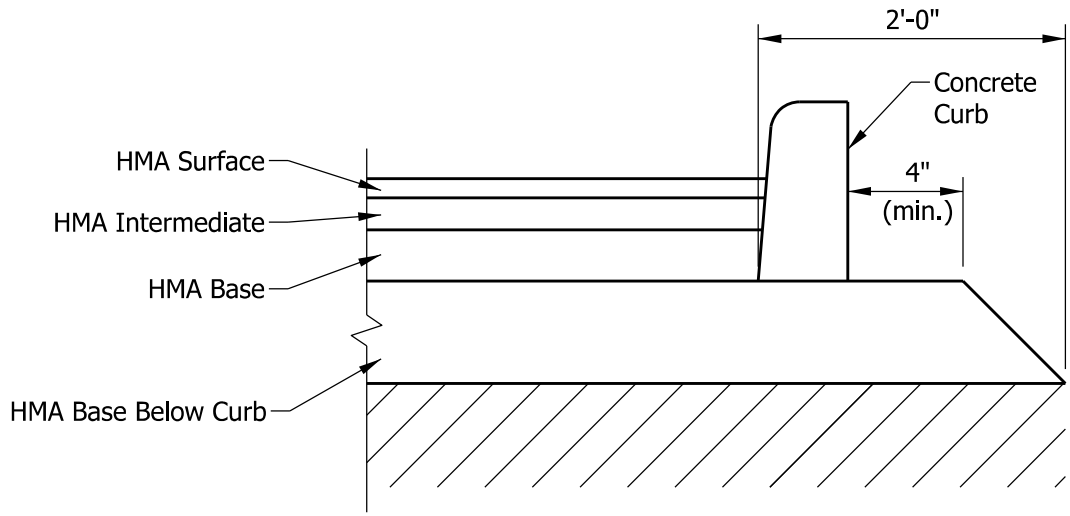

HMA PAVEMENT WITH CONCRETE CURB AND NO UNDERDRAIN

Figure 602-3CC

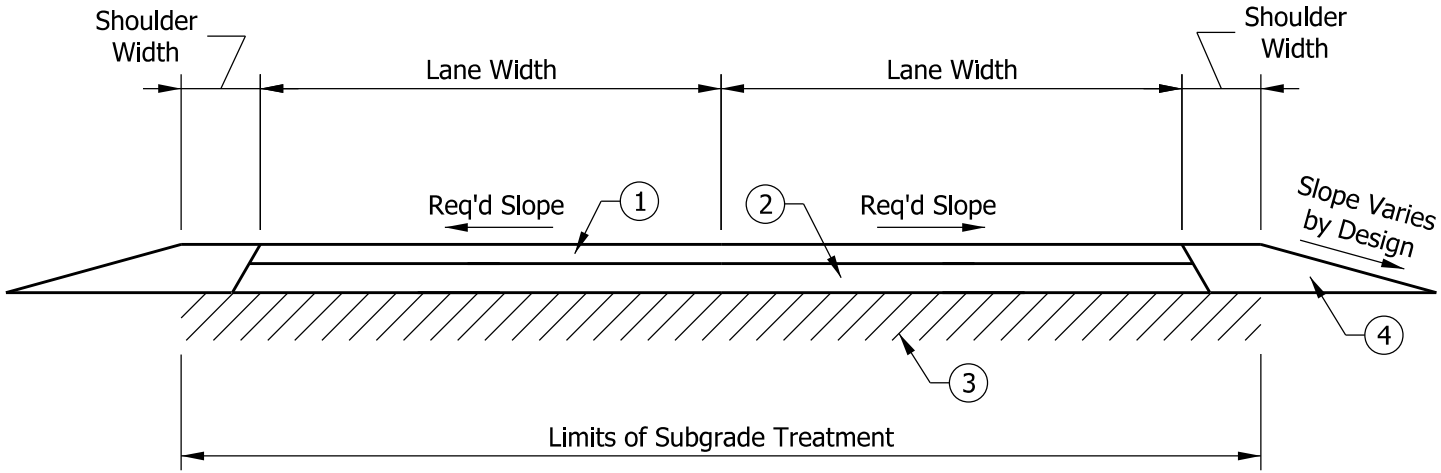

NOTES:

1. 4 in. Compacted Aggregate, No. 73
2. 6 in. Compacted Aggregate, No. 53
3. Subgrade Treatment, Type ___
4. Variable-Depth Suitable Material

AGGREGATE PAVEMENT

Figure 602-3DD

HMA Section (Except Rest Area):

1. HMA on Compacted Aggregate Pavement (AADTT < 50)
   165 lb/yd^2 QC/QA, HMA, 2, 58S, Surface 9.5 mm on
   275 lb/yd^2 QC/QA, HMA, 2, 58S, Intermediate 19.0 mm on
   6 in. Compacted Aggregate, No. 53 on
   Subgrade Treatment Type II

2. HMA on Compacted Aggregate Pavement (AADTT < 250)
   165 lb/yd^2 QC/QA, HMA, 2, 58S, Surface 9.5 mm on
   385 lb/yd^2 QC/QA, HMA, 2, 58S, Intermediate 19.0 mm on
   5 in. Compacted Aggregate, No. 53 on
   Subgrade Treatment Type II

3. HMA on Compacted Aggregate Pavement (AADTT < 500)
   165 lb/yd^2 QC/QA, HMA, 2, 58S, Surface 9.5 mm on
   495 lb/yd^2 QC/QA, HMA, 2, 58S, Base 19.0 mm on
   4 in. Compacted Aggregate, No. 53 on
   Subgrade Treatment Type II

PCCP Section (AADTT≤ 500) (Except Rest Area):

7.5 in. of PCCP at 15-ft joint spacing with 1-in. dowel bar on 6 in.
of Dense Graded Subbase on
Subgrade Treatment Type II

For a parking lot with an AADTT equal to or greater than 500, a pavement design request is required.

Rest Area Parking (All AADTT):

12 in. QC/QA-PCCP at 15ft joint spa. with 1.5-in. dowel bar on
300 lb/yd^2 QC/QA-HMA, 4, 76, Intermediate, OG 19.0mm, on
6 in. Compacted Aggregate, No. 53 on
Geotextile for Pavement, Type 2B on
Subgrade Treatment Type IC

Where the geotechnical report recommendation for subgrade treatment differs from this figure, the subgrade treatment in the geotechnical report should be used.

PARKING LOT PAVEMENT SECTIONS

Figure 602-3EE