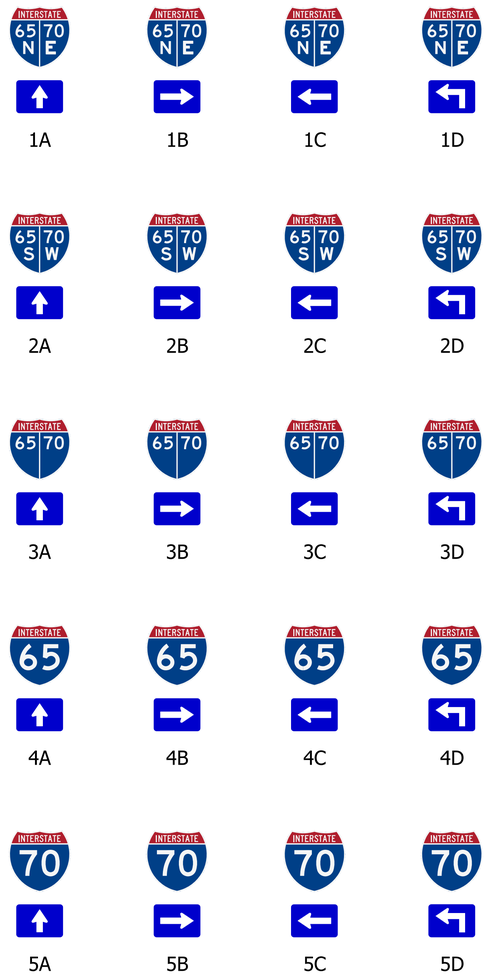

ROUTE MARKER ASSEMBLY LEGEND

1A EXISTING SIGN (RMA)

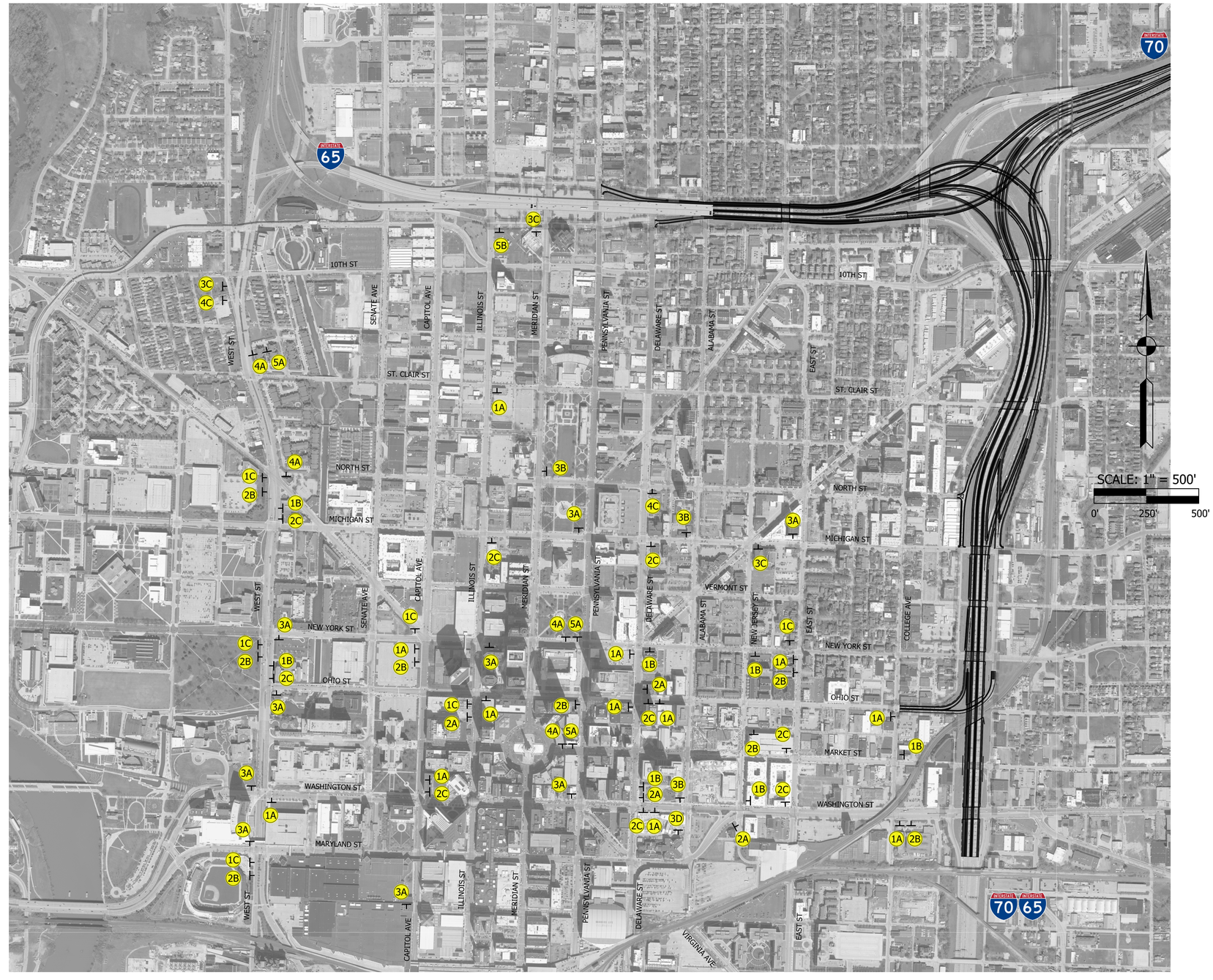

DRAFT
NOT FOR CONSTRUCTION

RECOMMENDED FOR APPROVAL _____ DESIGN ENGINEER _____ DATE

DESIGNED: SEM JSE
DRAWN: SEM
CHECKED: RMG
CHECKED: RMG

INDIANA
DEPARTMENT OF TRANSPORTATION

EXISTING WAYFINDING SIGNS

HORIZONTAL SCALE	BRIDGE FILE
1"=200'	N/A
VERTICAL SCALE	DESIGNATION
N/A	1901936

SURVEY BOOK	SHEETS WAY-01
ELECTRONIC	39 of 54
CONTRACT	PROJECT
B-36910	1600808

fjelks
2/24/2020 9:18:11 pm
model:Sheet1
file:p:\1297 - i-65 i-70 north split\dwgs\road\010-traf de\1600808-rd-s-way01.dgn

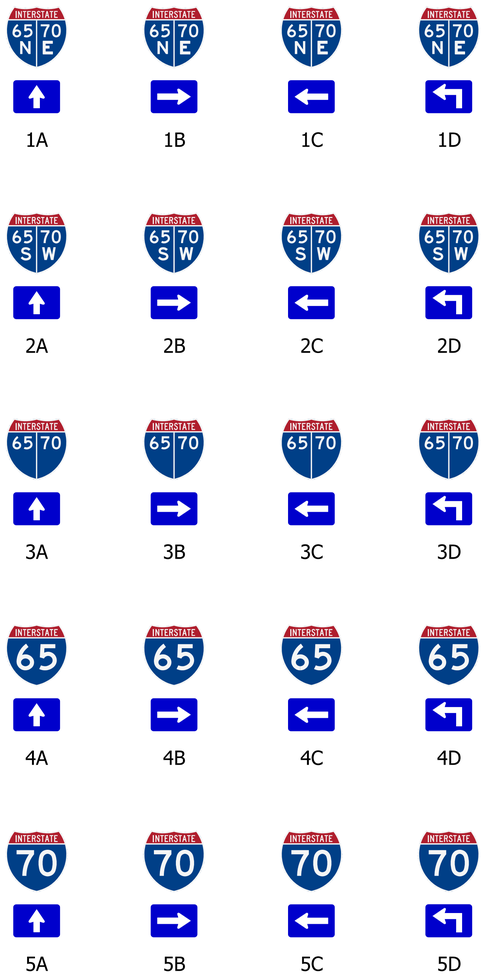

ROUTE MARKER ASSEMBLY LEGEND

1A EXISTING SIGN (RMA)

1A PROPOSED SIGN (RMA)

ROUTE TO I-65 SOUTH

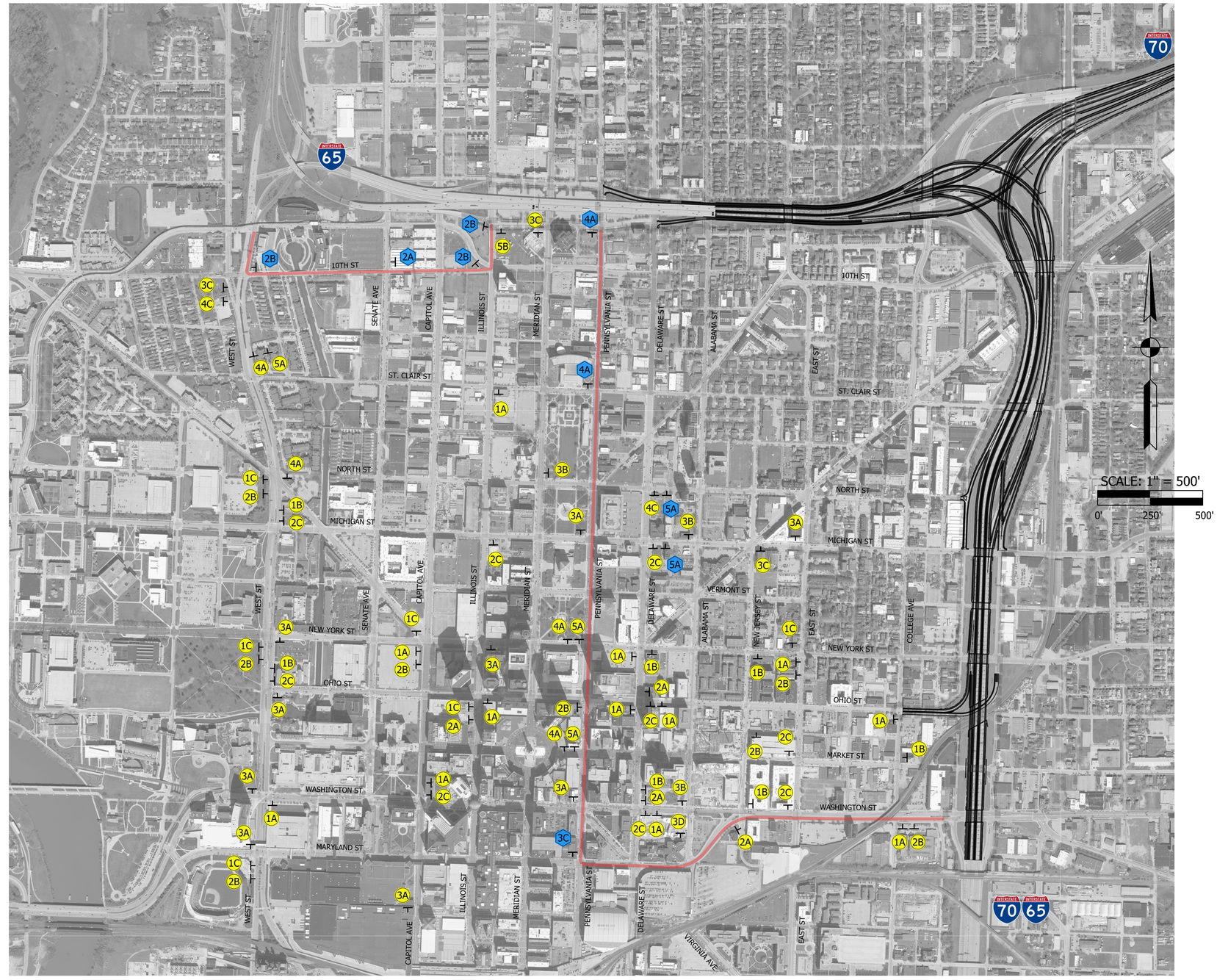

DRAFT
NOT FOR CONSTRUCTION

RECOMMENDED FOR APPROVAL _____ DESIGN ENGINEER DATE

DESIGNED: SEM JSE DRAWN: SEM

CHECKED: RMG CHECKED: RMG

INDIANA
DEPARTMENT OF TRANSPORTATION

PROPOSED WAYFINDING SIGNS

HORIZONTAL SCALE	BRIDGE FILE
1"=200'	N/A
VERTICAL SCALE	DESIGNATION
N/A	1901936
SURVEY BOOK	SHEETS WAY-02
ELECTRONIC	40 of 54
CONTRACT	PROJECT
B-36910	1600808

fjelks
2/24/2020 9:18:37 pm
model:Sheet1
file:p:\1297 - i-65 i-70 north split\dwgs\road\010-traf de\1600808-rd-s-way02.dgn

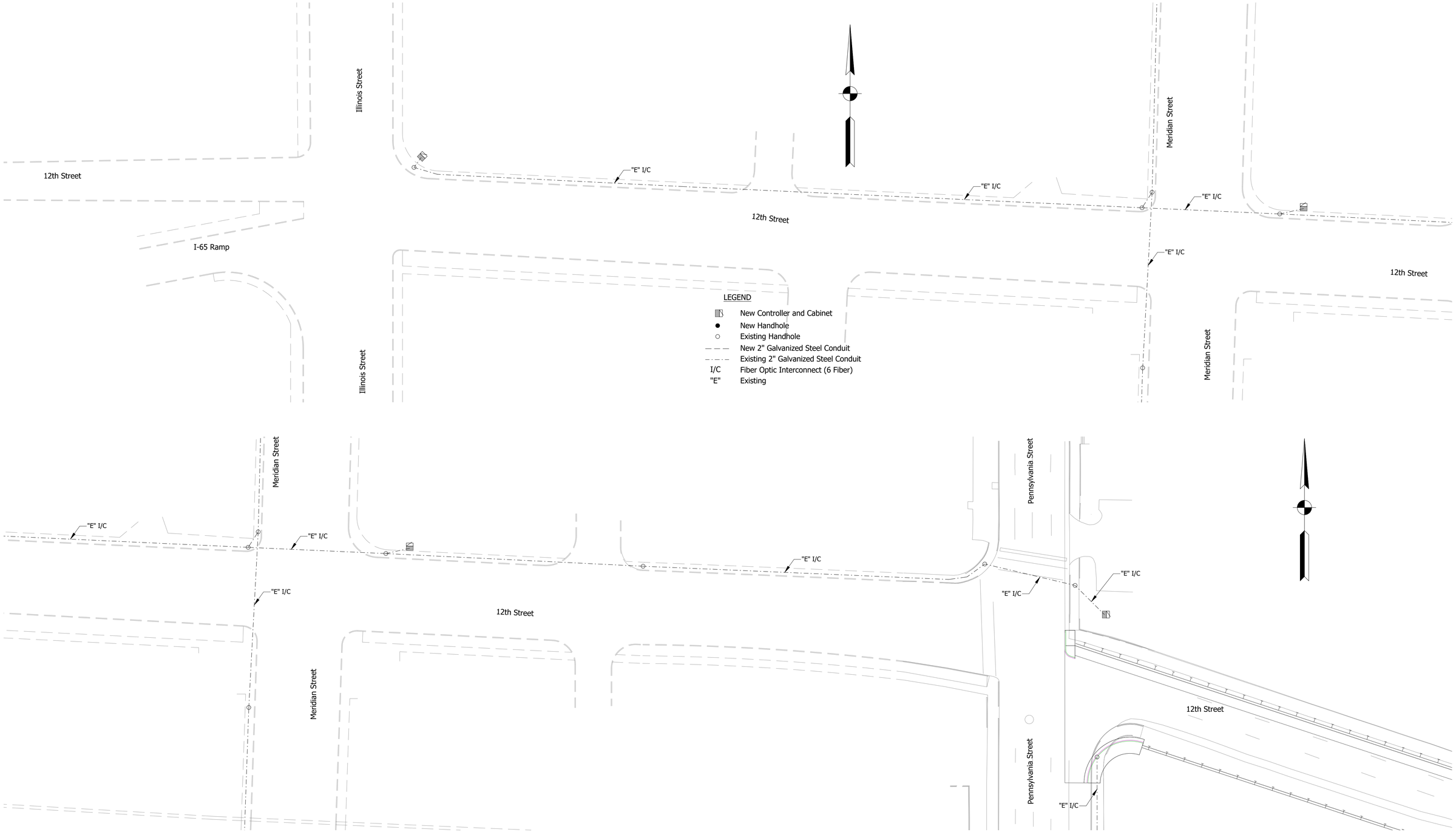

Z:\2019\19057P - JANSSEN SPAANS - NORTH SPLIT\DWG\SIGNALS\19057P-SIGNAL_INTERCONNECT.DWG Created By: Date Created: 3/26/2018

A&F ENGINEERING
Transportation & Site Engineering
Creating Order Since 1966
8365 Keystone Crossing, Suite 201, Indianapolis, IN. 46240 (317) 202-0864

RECOMMENDED FOR APPROVAL _____ DESIGN ENGINEER DATE

DESIGNED: xxx DRAWN: xxx

CHECKED: xxx CHECKED: xxx

INDIANA
DEPARTMENT OF TRANSPORTATION

INTERCONNECT MODERNIZATION DETAIL

HORIZONTAL SCALE	BRIDGE FILE
1" = 30'	N/A
VERTICAL SCALE	DESIGNATION
N/A	1901936
SURVEY BOOK	SHEETS
	41 of 54
CONTRACT	PROJECT
--	--

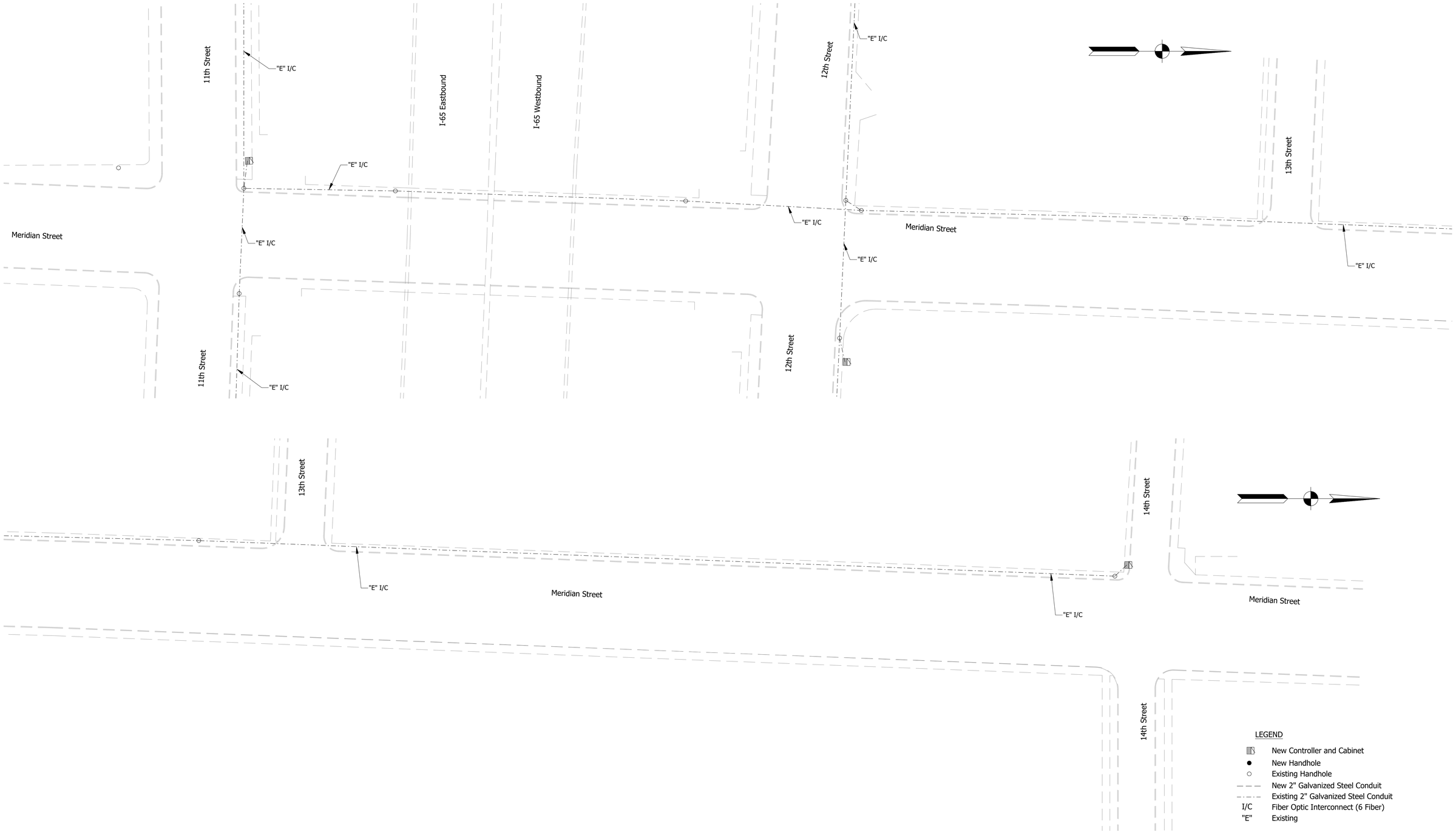

Z:\2019\19057P - JANSSEN SPAANS - NORTH SPLIT\DWG\SIGNALS\19057P-SIGNAL_INTERCONNECT.DWG Created By: Date Created: 3/26/2018

A&F ENGINEERING
Transportation & Site Engineering
Creating Order Since 1966
8365 Keystone Crossing, Suite 201, Indianapolis, IN. 46240 (317) 202-0864

RECOMMENDED FOR APPROVAL
DESIGN ENGINEER DATE

DESIGNED: xxx DRAWN: xxx
CHECKED: xxx CHECKED: xxx

INDIANA
DEPARTMENT OF TRANSPORTATION

INTERCONNECT MODERNIZATION DETAIL

HORIZONTAL SCALE	BRIDGE FILE
1" = 30'	N/A
VERTICAL SCALE	DESIGNATION
N/A	1901936

SURVEY BOOK	SHEETS		
	42	of	54
CONTRACT	PROJECT		
--	--		

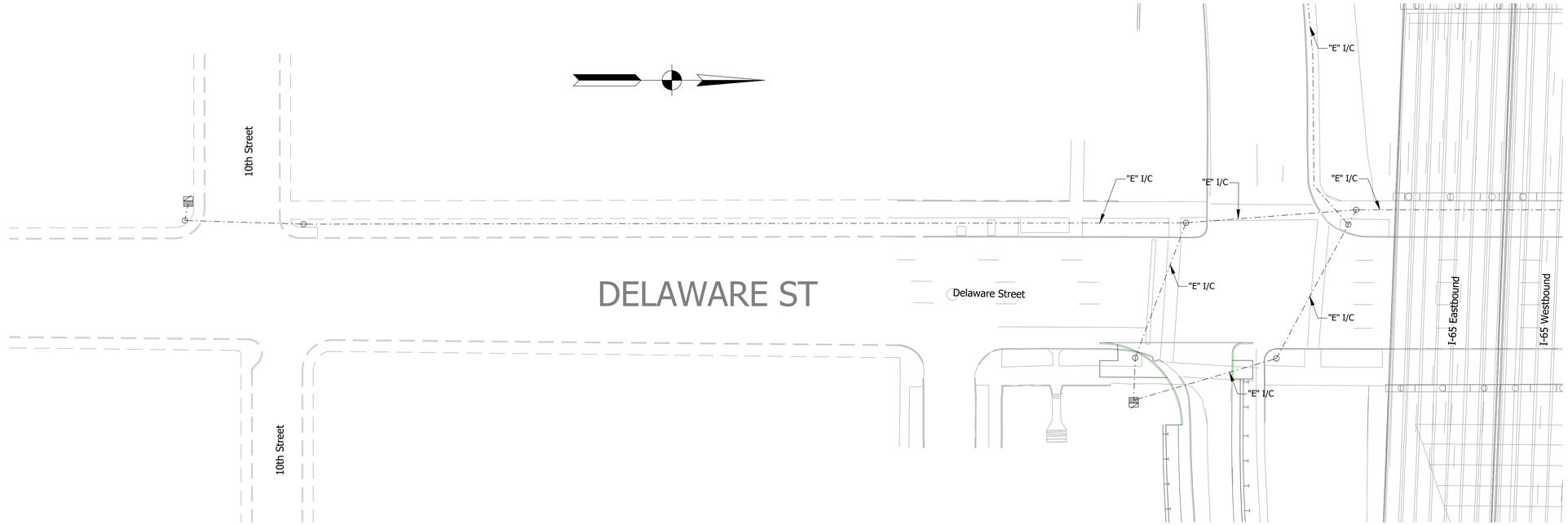

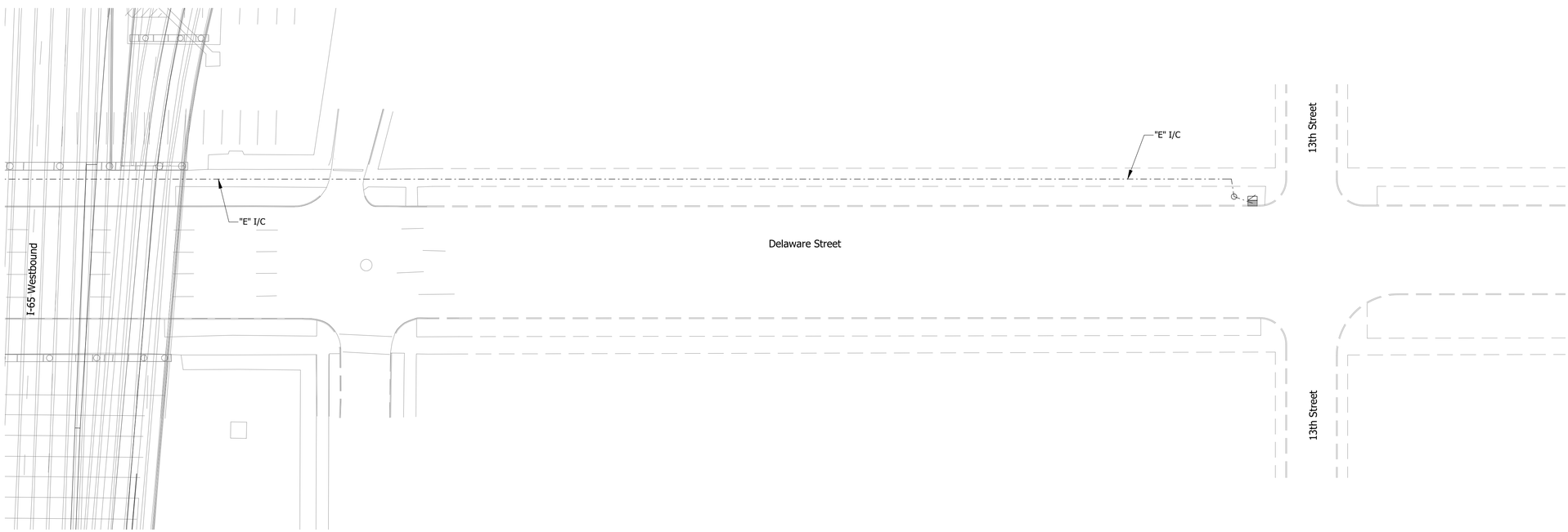

LEGEND

▥	New Controller and Cabinet
●	New Handhole
○	Existing Handhole
— — —	New 2" Galvanized Steel Conduit
– · – · –	Existing 2" Galvanized Steel Conduit
I/C	Fiber Optic Interconnect (6 Fiber)
"E"	Existing

A&F ENGINEERING
Transportation & Site Engineering
Creating Order Since 1966
8365 Keystone Crossing, Suite 201, Indianapolis, IN. 46240 (317) 202-0864

RECOMMENDED FOR APPROVAL _____ DESIGN ENGINEER DATE

DESIGNED: xxx DRAWN: xxx
CHECKED: xxx CHECKED: xxx

INDIANA
DEPARTMENT OF TRANSPORTATION

INTERCONNECT MODERNIZATION DETAIL

HORIZONTAL SCALE	BRIDGE FILE
1" = 30'	N/A
VERTICAL SCALE	DESIGNATION
N/A	1901936
SURVEY BOOK	SHEETS
	43 of 54
CONTRACT	PROJECT
--	--

Z:\2019\19057P - JANSSEN SPAANS - NORTH SPLIT\DWG\SIGNALS\19057P-SIGNAL_INTERCONNECT.DWG Created By: Date Created: 3/26/2018

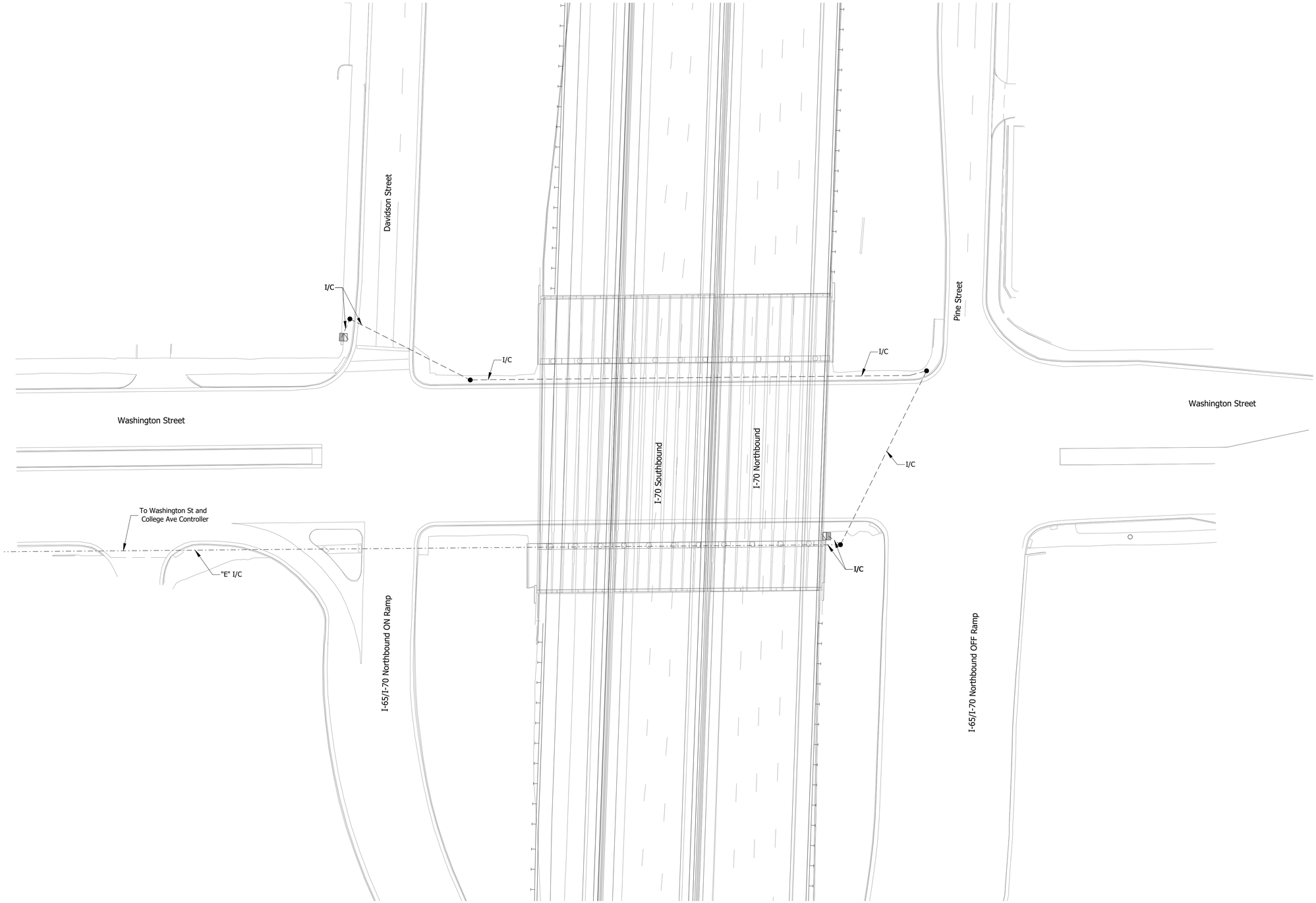

LEGEND

▨	New Controller and Cabinet
●	New Handhole
○	Existing Handhole
— — —	New 2" Galvanized Steel Conduit
— · — · —	Existing 2" Galvanized Steel Conduit
I/C	Fiber Optic Interconnect (6 Fiber)
"E"	Existing

A&F ENGINEERING
Transportation & Site Engineering
Creating Order Since 1966
8365 Keystone Crossing, Suite 201, Indianapolis, IN. 46240 (317) 202-0864

RECOMMENDED FOR APPROVAL _____ DESIGN ENGINEER DATE

DESIGNED: xxx DRAWN: xxx
CHECKED: xxx CHECKED: xxx

INDIANA
DEPARTMENT OF TRANSPORTATION

INTERCONNECT MODERNIZATION DETAIL

HORIZONTAL SCALE	BRIDGE FILE
1" = 30'	N/A
VERTICAL SCALE	DESIGNATION
N/A	1901936
SURVEY BOOK	SHEETS
	44 of 54
CONTRACT	PROJECT
--	--

Z:\2019\19057P - JANSSEN SPAANS - NORTH SPLIT\DWG\SIGNALS\19057P-SIGNAL_INTERCONNECT.DWG Created By: Date Created: 3/26/2018

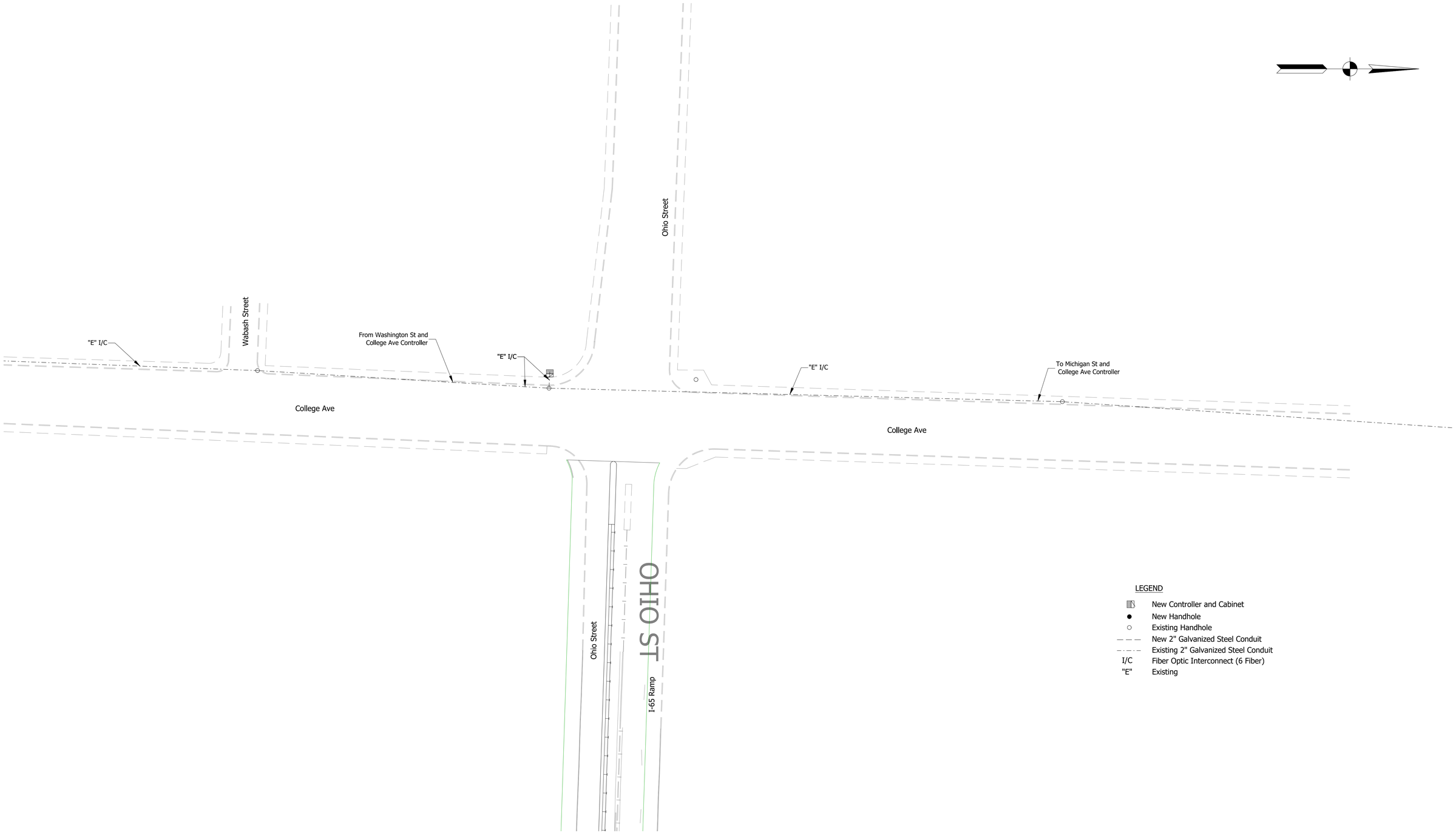

Z:\2019\19057P - JANSSEN SPAANS - NORTH SPLIT\DWG\SIGNALS\19057P-SIGNAL_INTERCONNECT.DWG Created By: Date Created: 3/26/2018

A&F ENGINEERING
Transportation & Site Engineering
Creating Order Since 1966
8365 Keystone Crossing, Suite 201, Indianapolis, IN. 46240 (317) 202-0864

RECOMMENDED FOR APPROVAL
DESIGN ENGINEER DATE

DESIGNED: xxx DRAWN: xxx
CHECKED: xxx CHECKED: xxx

INDIANA
DEPARTMENT OF TRANSPORTATION

INTERCONNECT MODERNIZATION DETAIL

HORIZONTAL SCALE	BRIDGE FILE
1" = 30'	N/A
VERTICAL SCALE	DESIGNATION
N/A	1901936
SURVEY BOOK	SHEETS
	45 of 54
CONTRACT	PROJECT
--	--

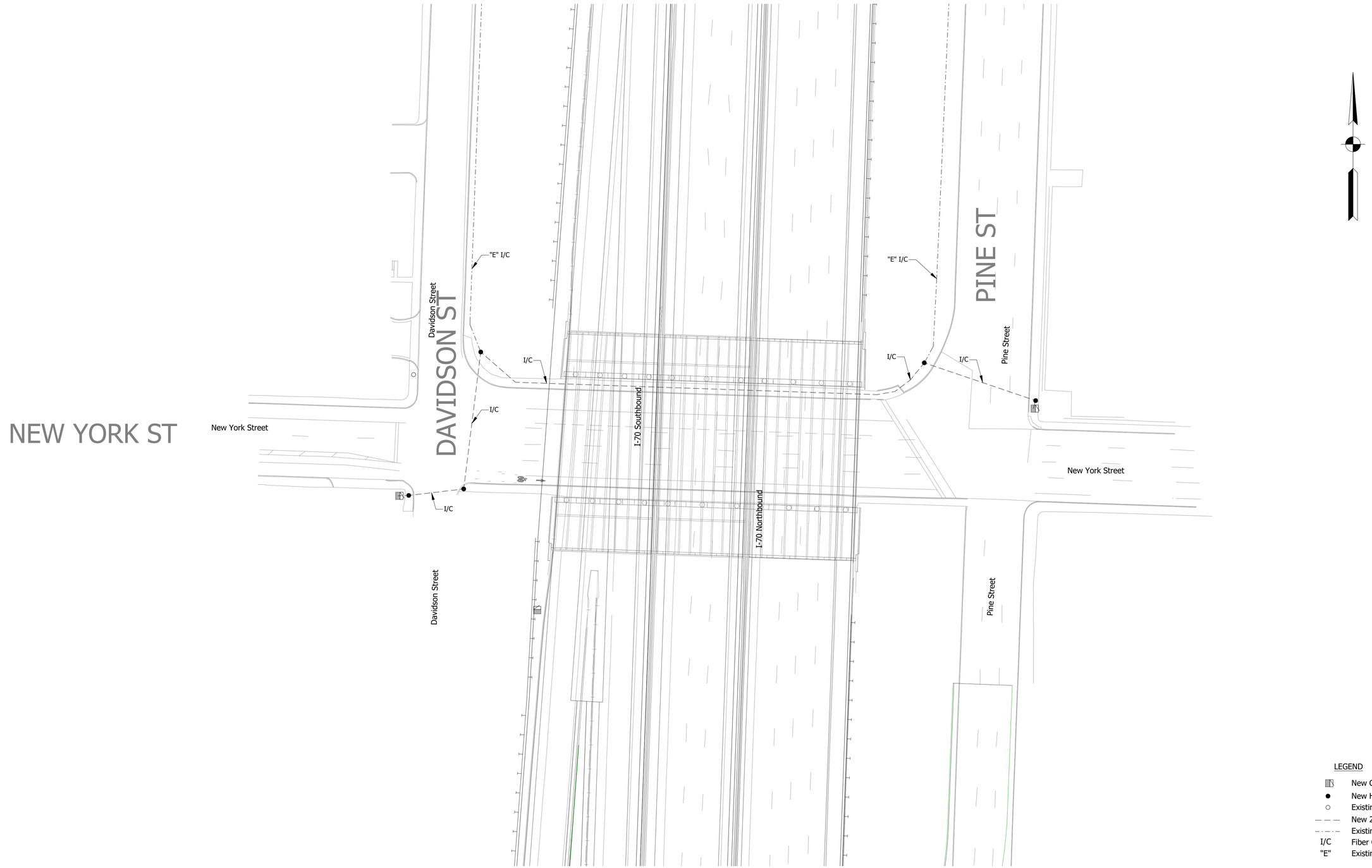

LEGEND

	New Controller and Cabinet
●	New Handhole
○	Existing Handhole
— — —	New 2" Galvanized Steel Conduit
— · — · —	Existing 2" Galvanized Steel Conduit
I/C	Fiber Optic Interconnect (6 Fiber)
"E"	Existing

A&F ENGINEERING
Transportation & Site Engineering
Creating Order Since 1966
8365 Keystone Crossing, Suite 201, Indianapolis, IN. 46240 (317) 202-0864

RECOMMENDED FOR APPROVAL
DESIGN ENGINEER DATE

DESIGNED: xxx DRAWN: xxx
CHECKED: xxx CHECKED: xxx

INDIANA
DEPARTMENT OF TRANSPORTATION

INTERCONNECT MODERNIZATION DETAIL

HORIZONTAL SCALE	BRIDGE FILE
1" = 30'	N/A
VERTICAL SCALE	DESIGNATION
N/A	1901936
SURVEY BOOK	SHEETS
	46 of 54
CONTRACT	PROJECT
--	--

Z:\2019\190572P - JANSSEN SPAANS - NORTH SPLIT\DWG\SIGNALS\190572P-SIGNAL_INTERCONNECT.DWG Created By: Date Created: 3/26/2018

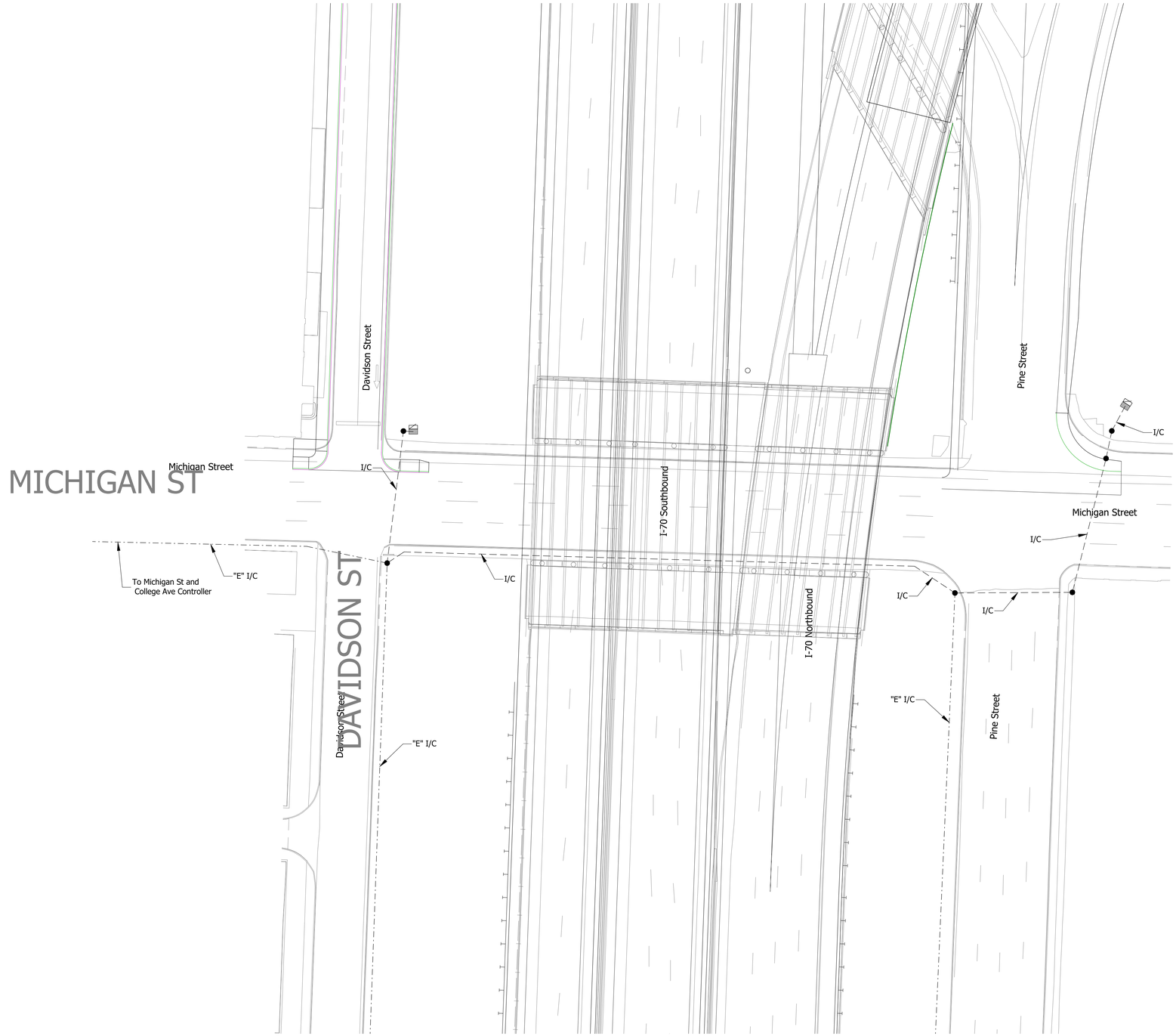

LEGEND

	New Controller and Cabinet
●	New Handhole
○	Existing Handhole
— — —	New 2" Galvanized Steel Conduit
— · — · —	Existing 2" Galvanized Steel Conduit
I/C	Fiber Optic Interconnect (6 Fiber)
"E"	Existing

A&F ENGINEERING
Transportation & Site Engineering
Creating Order Since 1966
8365 Keystone Crossing, Suite 201, Indianapolis, IN. 46240 (317) 202-0864

RECOMMENDED FOR APPROVAL _____ DESIGN ENGINEER DATE

DESIGNED: xxx DRAWN: xxx

CHECKED: xxx CHECKED: xxx

INDIANA
DEPARTMENT OF TRANSPORTATION

INTERCONNECT MODERNIZATION DETAIL

HORIZONTAL SCALE	BRIDGE FILE
1" = 30'	N/A
VERTICAL SCALE	DESIGNATION
N/A	1901936
SURVEY BOOK	SHEETS
	47 of 54
CONTRACT	PROJECT
--	--

Z:\2019\19057P - JANSSEN SP&ANS - NORTH SPLIT\DWG\SIGNALS\19057P-SIGNAL_INTERCONNECT.DWG Created By: Date Created: 3/26/2018

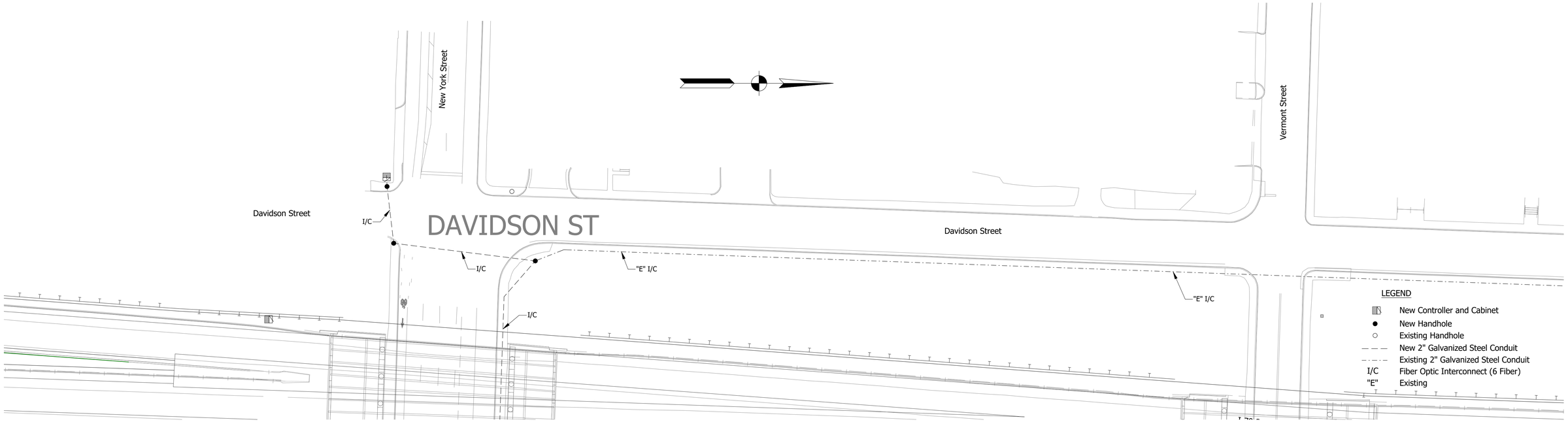

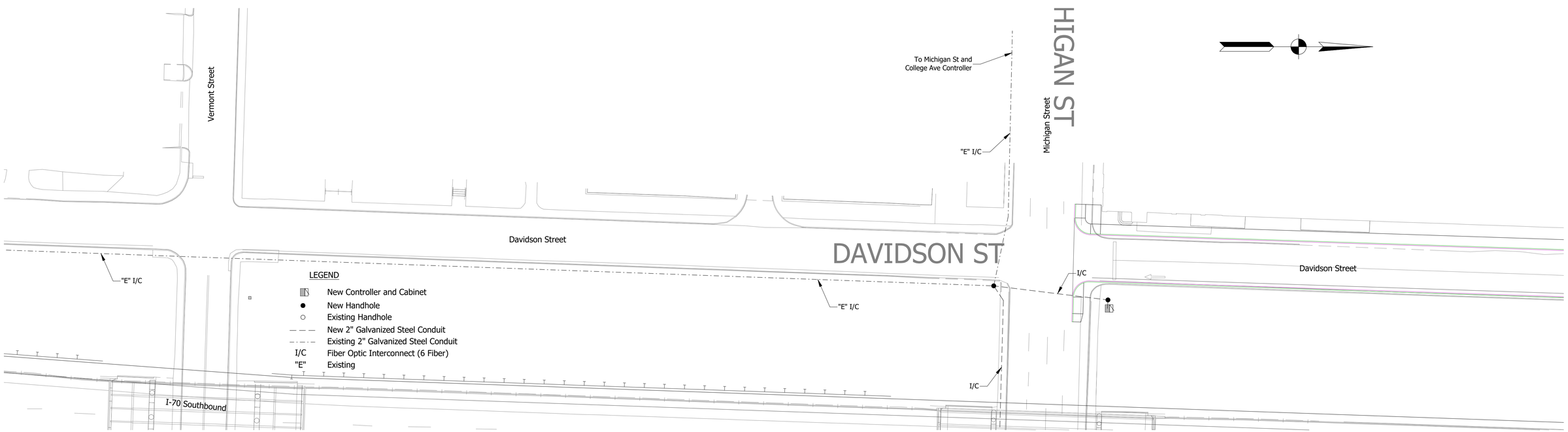

Z:\2019\190579 - JANSSEN SPAANS - NORTH SPLIT\DWG\SIGNALS\190579-SIGNAL_INTERCONNECT.DWG Created By: Date Created: 3/26/2018

A&F ENGINEERING
Transportation & Site Engineering
Creating Order Since 1966
8365 Keystone Crossing, Suite 201, Indianapolis, IN. 46240 (317) 202-0864

RECOMMENDED FOR APPROVAL _____ DESIGN ENGINEER DATE

DESIGNED: xxx DRAWN: xxx

CHECKED: xxx CHECKED: xxx

INDIANA
DEPARTMENT OF TRANSPORTATION

INTERCONNECT MODERNIZATION DETAIL

HORIZONTAL SCALE	BRIDGE FILE
1" = 30'	N/A
VERTICAL SCALE	DESIGNATION
N/A	1901936
SURVEY BOOK	SHEETS
	48 of 54
CONTRACT	PROJECT
--	--

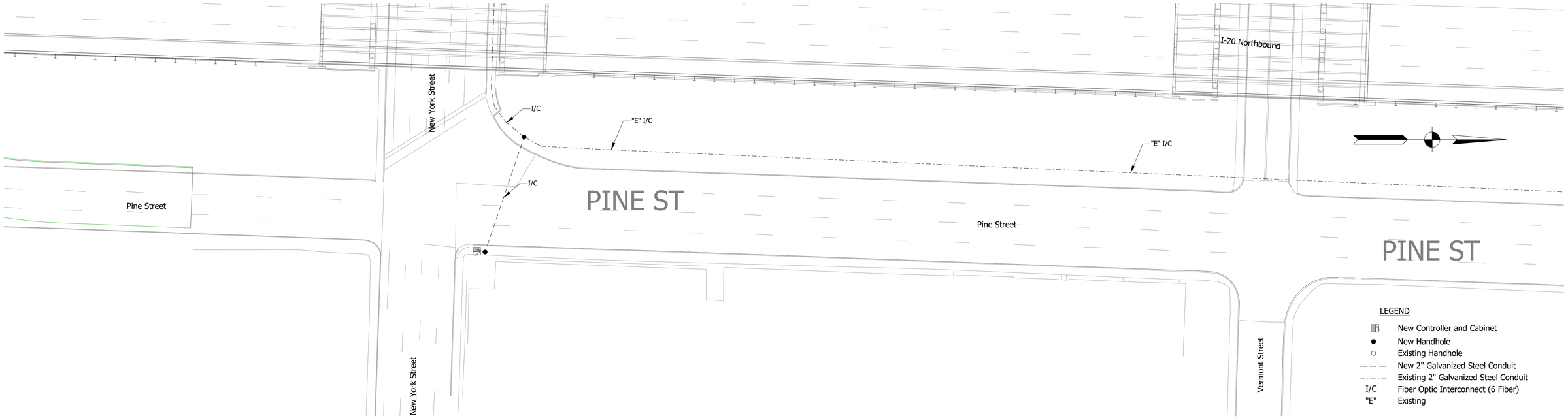

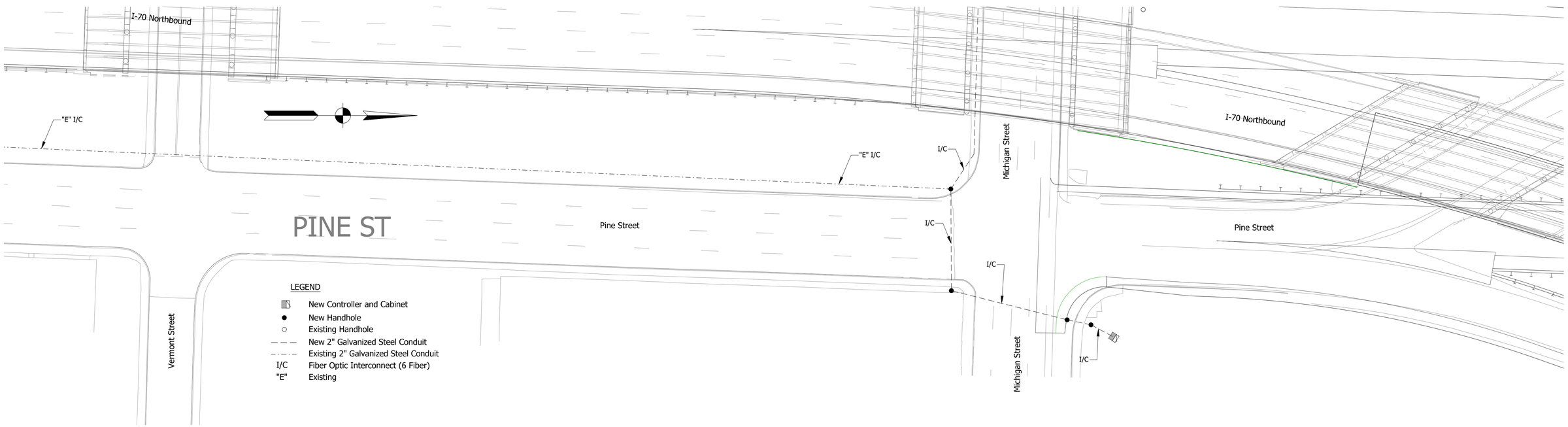

Z:\2019\19057P - JANSSEN SPAANS - NORTH SPLIT\DWG\SIGNALS\19057P-SIGNAL_INTERCONNECT.DWG Created By: Date Created: 3/26/2018

A&F ENGINEERING
Transportation & Site Engineering
Creating Order Since 1966
8365 Keystone Crossing, Suite 201, Indianapolis, IN. 46240 (317) 202-0864

RECOMMENDED FOR APPROVAL
DESIGN ENGINEER DATE

DESIGNED: xxx DRAWN: xxx
CHECKED: xxx CHECKED: xxx

INDIANA
DEPARTMENT OF TRANSPORTATION

INTERCONNECT MODERNIZATION DETAIL

HORIZONTAL SCALE	BRIDGE FILE
1" = 30'	N/A
VERTICAL SCALE	DESIGNATION
N/A	1901936

SURVEY BOOK	SHEETS		
	49	of	54
CONTRACT	PROJECT		
--	--		

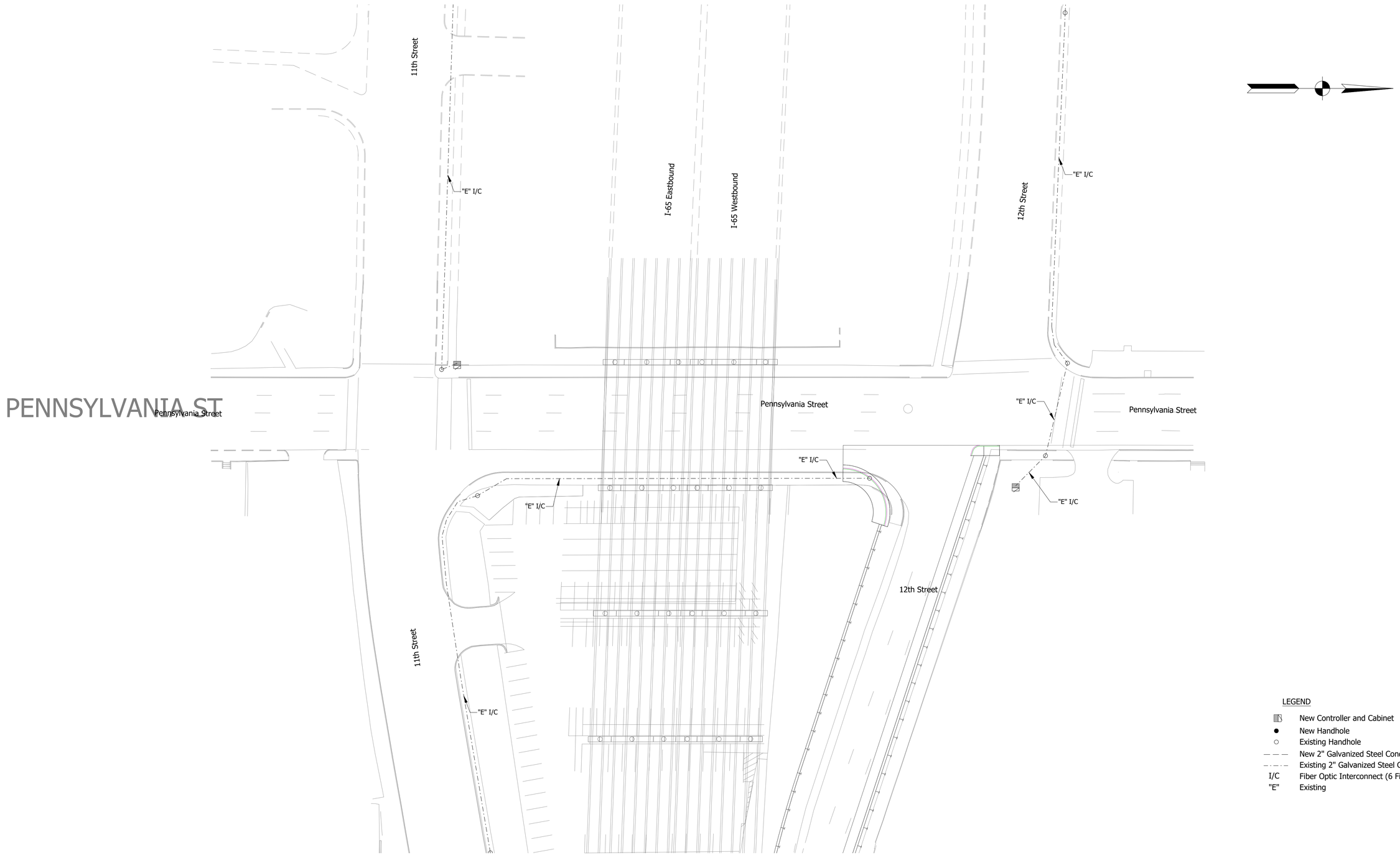

LEGEND

▨	New Controller and Cabinet
●	New Handhole
○	Existing Handhole
— — —	New 2" Galvanized Steel Conduit
– · – · –	Existing 2" Galvanized Steel Conduit
I/C	Fiber Optic Interconnect (6 Fiber)
"E"	Existing

A&F ENGINEERING
Transportation & Site Engineering
Creating Order Since 1966
8365 Keystone Crossing, Suite 201, Indianapolis, IN. 46240 (317) 202-0864

RECOMMENDED FOR APPROVAL _____ DESIGN ENGINEER DATE

DESIGNED: xxx DRAWN: xxx
CHECKED: xxx CHECKED: xxx

INDIANA
DEPARTMENT OF TRANSPORTATION

INTERCONNECT MODERNIZATION DETAIL

HORIZONTAL SCALE	BRIDGE FILE
1" = 30'	N/A
VERTICAL SCALE	DESIGNATION
N/A	1901936
SURVEY BOOK	SHEETS
	50 of 54
CONTRACT	PROJECT
--	--

Z:\2019\19057P - JANSSEN SPAANS - NORTH SPLIT\DWG\SIGNALS\190057P-SIGNAL_INTERCONNECT.DWG Created By: Date Created: 3/26/2018

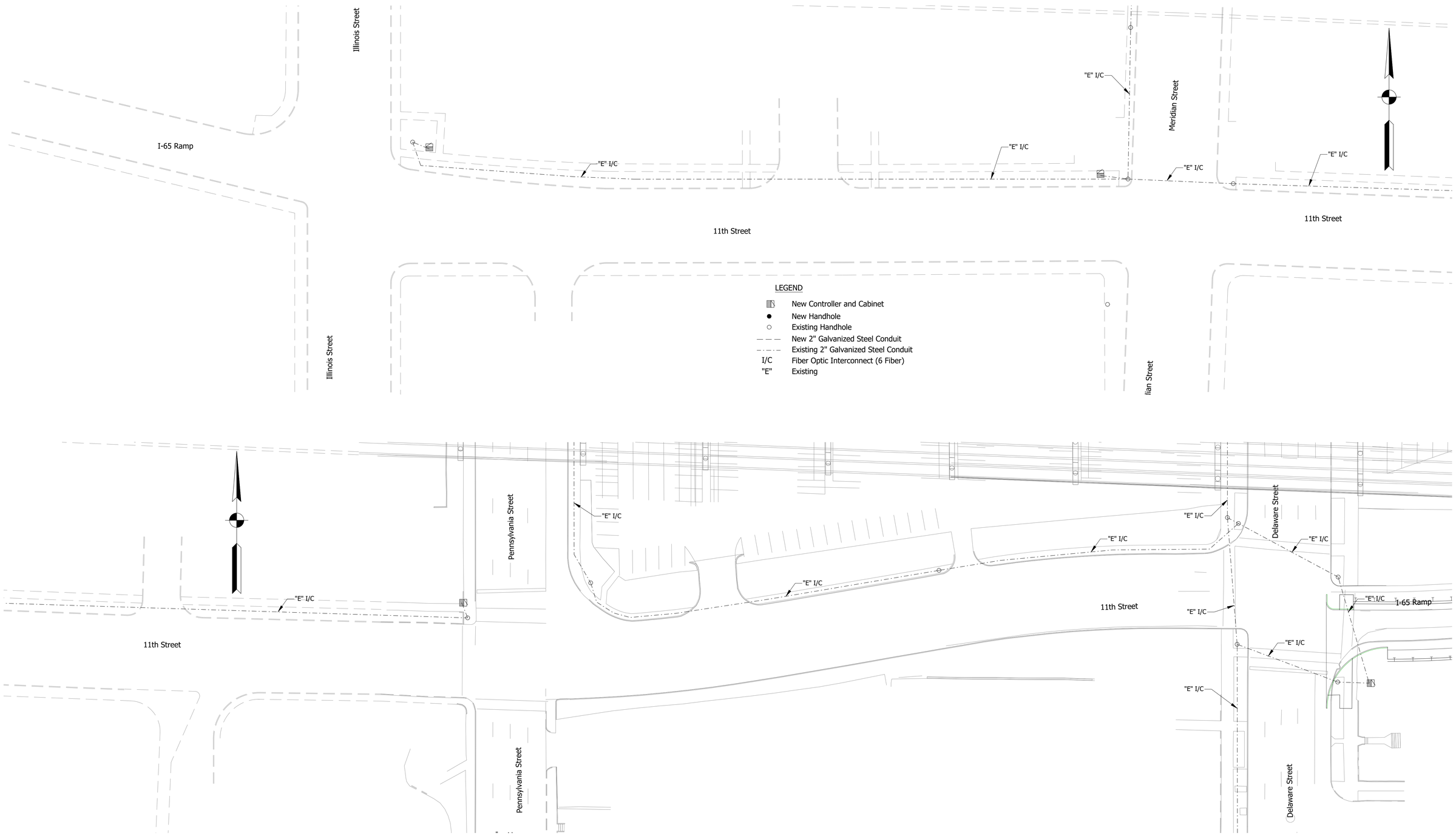

Z:\2019\19057P - JANSSEN SPAANS - NORTH SPLIT\DWG\SIGNALS\19057P-SIGNAL_INTERCONNECT.DWG Created By: Date Created: 3/26/2018

A&F ENGINEERING
Transportation & Site Engineering
Creating Order Since 1966
8365 Keystone Crossing, Suite 201, Indianapolis, IN. 46240 (317) 202-0864

RECOMMENDED FOR APPROVAL
DESIGN ENGINEER DATE

DESIGNED: xxx DRAWN: xxx
CHECKED: xxx CHECKED: xxx

INDIANA
DEPARTMENT OF TRANSPORTATION

INTERCONNECT MODERNIZATION DETAIL

HORIZONTAL SCALE	BRIDGE FILE
1" = 30'	N/A
VERTICAL SCALE	DESIGNATION
N/A	1901936
SURVEY BOOK	SHEETS
	51 of 54
CONTRACT	PROJECT
--	--

NOTES:

1. All Spans Are Span, Catenary, And Tether.
2. Each Pedestrian Indication Shall Have A Pedestrian Push Button And Sign R10-3e.

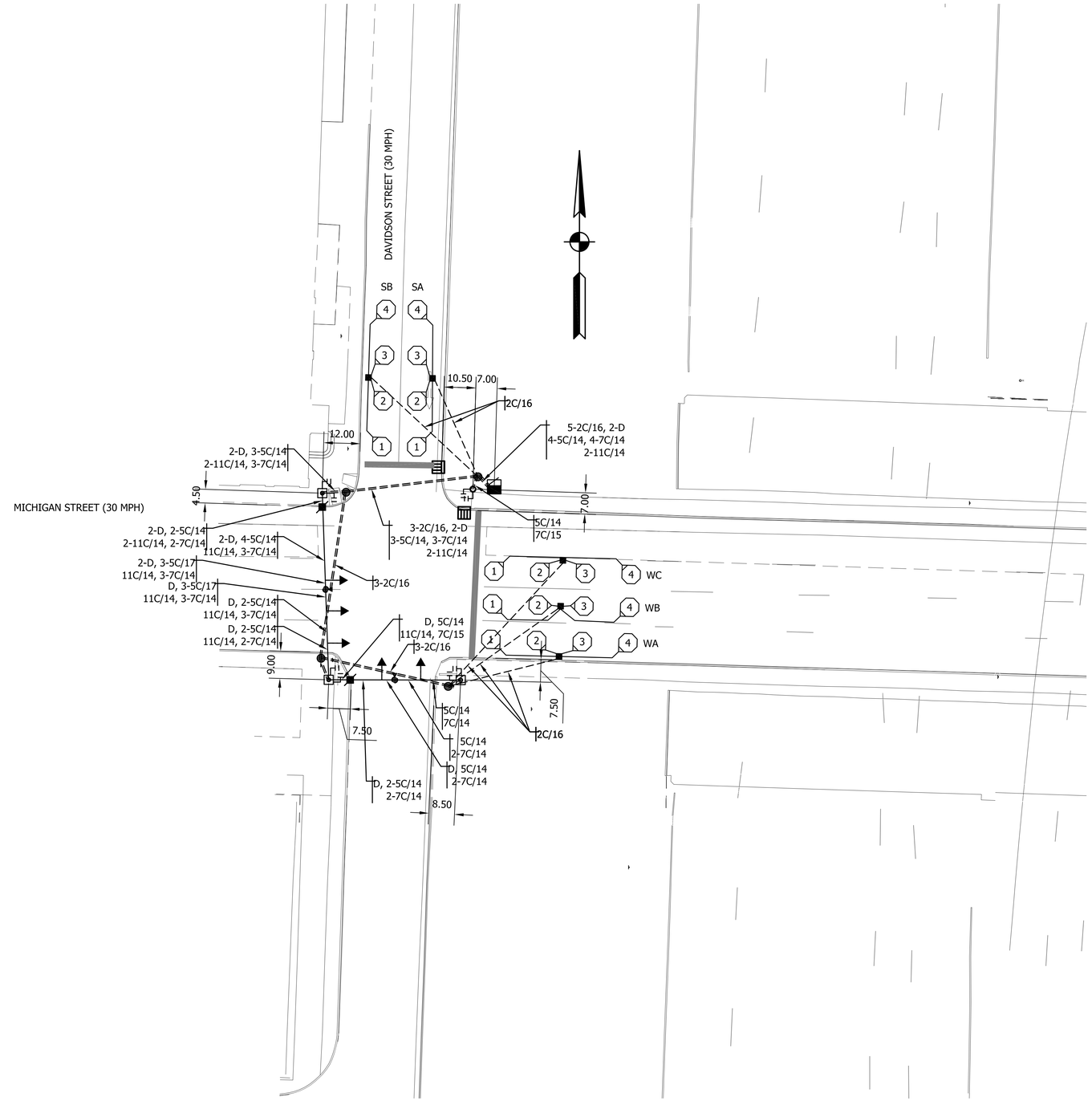

LEGEND

- 1-Way, 3-Section (12" Red Led, 12" Amber Led, 12" Green Led) Signal Indication
- Controller, 8 Phase, TS2 Type 1, In "P-1" Cabinet On "P-1" Foundation
- 30' Steel Strain Pole And Foundation
- Span Mount Junction Box
- Pedestal on Type A Foundation
- Pedestrian Indication
- Overhead Street Name Sign, Single Mount
- Overhead Street Name Sign, Double Mount
- Handhole
- Detector Housing
- 2'-6" Octagonal Loop - 4 Turns Series
- 2" Galvanized Steel Conduit
- D — 3C/14 & 3C/20
- Emergency Vehicle Detector

A&F ENGINEERING
Transportation & Site Engineering
Creating Order Since 1966
8365 Keystone Crossing, Suite 201, Indianapolis, IN. 46240 (317) 202-0864

RECOMMENDED FOR APPROVAL _____ DESIGN ENGINEER DATE

DESIGNED: xxx DRAWN: xxx
CHECKED: xxx CHECKED: xxx

INDIANA
DEPARTMENT OF TRANSPORTATION

TRAFFIC SIGNAL MODERNIZATION
MICHIGAN ST & DAVIDSON ST

HORIZONTAL SCALE	BRIDGE FILE
1" = 20'	N/A
VERTICAL SCALE	DESIGNATION
N/A	1901936
SURVEY BOOK	SHEETS
	52 of 54
CONTRACT	PROJECT
--	--

Z:\2019\19057P - JANSSEN SPAANS - NORTH SPLIT\DWG\SIGNALS\19057P-TS MICHIGAN & DAVIDSON.DWG Created By: Date Created: 3/26/2018

NOTES:

1. All Spans Are Span, Catenary, And Tether.
2. Each Pedestrian Indication Shall Have A Pedestrian Push Button And Sign R10-3e.

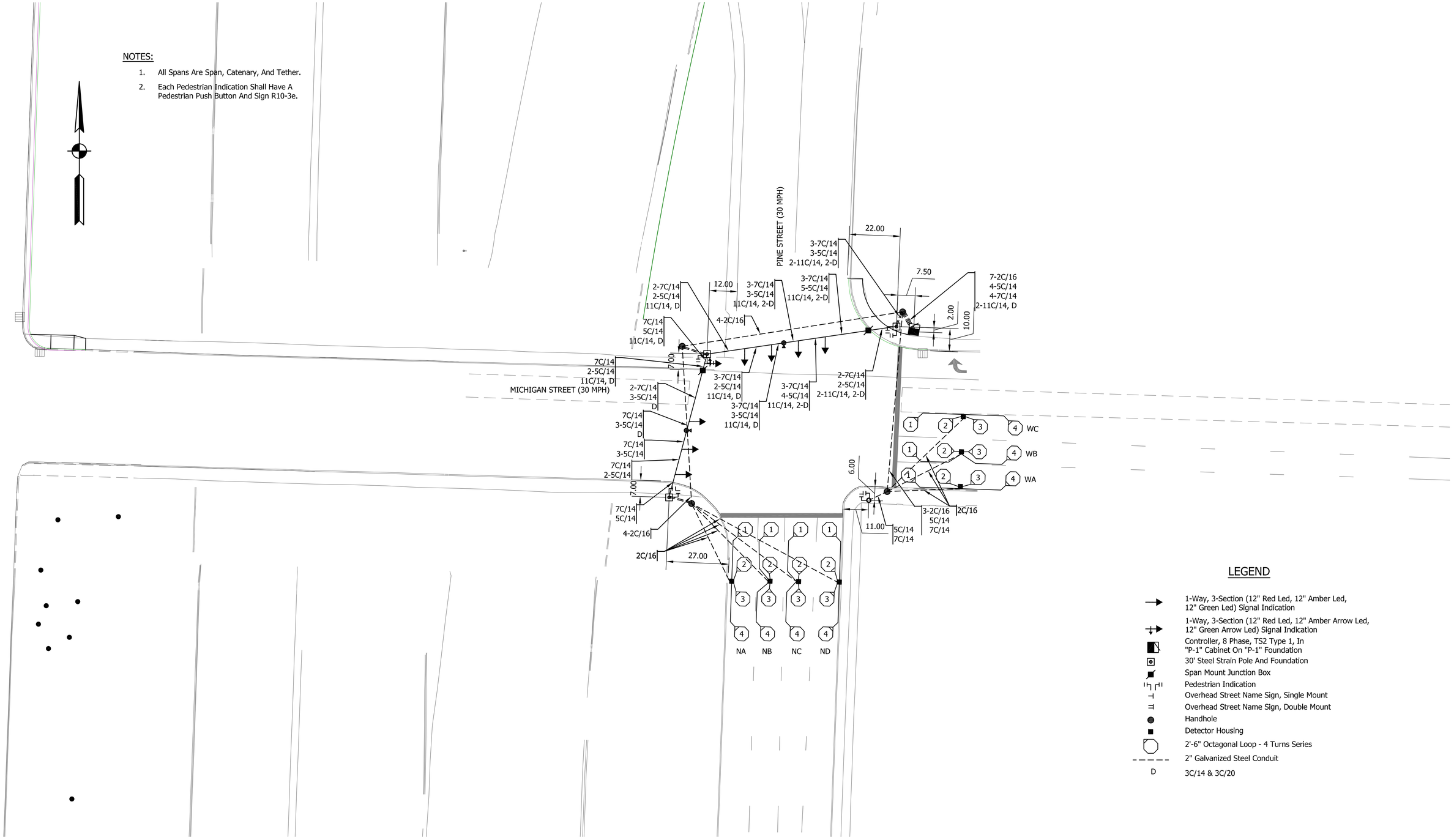

LEGEND

- 1-Way, 3-Section (12" Red Led, 12" Amber Led, 12" Green Led) Signal Indication
- 1-Way, 3-Section (12" Red Led, 12" Amber Arrow Led, 12" Green Arrow Led) Signal Indication
- Controller, 8 Phase, TS2 Type 1, In "P-1" Cabinet On "P-1" Foundation
- 30' Steel Strain Pole And Foundation
- Span Mount Junction Box
- Pedestrian Indication
- Overhead Street Name Sign, Single Mount
- Overhead Street Name Sign, Double Mount
- Handhole
- Detector Housing
- 2'-6" Octagonal Loop - 4 Turns Series
- 2" Galvanized Steel Conduit
- D — 3C/14 & 3C/20

A&F ENGINEERING
Transportation & Site Engineering
Creating Order Since 1966
8365 Keystone Crossing, Suite 201, Indianapolis, IN. 46240 (317) 202-0864

RECOMMENDED FOR APPROVAL _____ DESIGN ENGINEER DATE

DESIGNED: MCN DRAWN: MCN
CHECKED: JTR CHECKED: JTR

INDIANA
DEPARTMENT OF TRANSPORTATION

TRAFFIC SIGNAL MODERNIZATION
MICHIGAN ST & PINE ST

HORIZONTAL SCALE	BRIDGE FILE
1" = 20'	N/A
VERTICAL SCALE	DESIGNATION
N/A	1901936
SURVEY BOOK	SHEETS
	53 of 54
CONTRACT	PROJECT
--	--

Z:\2019\19057P - JANSSEN SPAANS - NORTH SPLIT\DWG\SIGNALS\19057P-TS MICHIGAN & PINE.DWG Created By: MCN Date Created: 1/15/2020

NOTES:

1. All Spans Are Span, Catenary, And Tether.
2. Each Pedestrian Indication Shall Have A Pedestrian Push Button And Sign R10-3e.

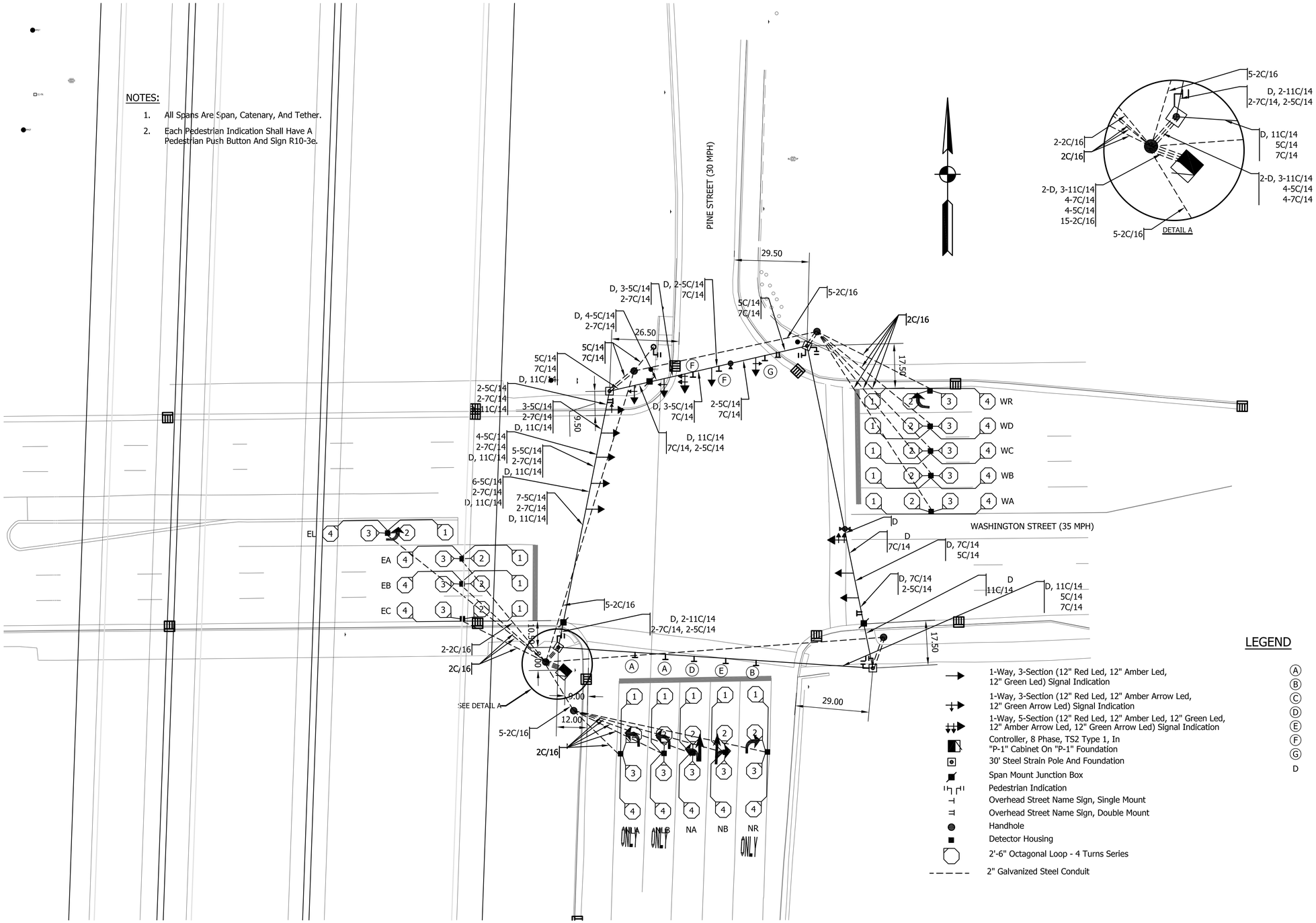

LEGEND

1-Way, 3-Section (12" Red Led, 12" Amber Led, 12" Green Led) Signal Indication	Ⓐ R3-5(L) Sign (30x36)
1-Way, 3-Section (12" Red Led, 12" Amber Arrow Led, 12" Green Arrow Led) Signal Indication	Ⓑ R3-5(R) Sign (30x36)
1-Way, 5-Section (12" Red Led, 12" Amber Led, 12" Green Led, 12" Amber Arrow Led, 12" Green Arrow Led) Signal Indication	Ⓒ R10-12 Sign (24x30)
Controller, 8 Phase, TS2 Type 1, In "P-1" Cabinet On "P-1" Foundation	Ⓓ R3-6(L) Sign (30x36)
30' Steel Strain Pole And Foundation	Ⓔ R3-6(R) Sign (30x36)
Span Mount Junction Box	Ⓕ R12-3 Sign (24x36)
Pedestrian Indication	Ⓖ R10-11b Sign (36x36)
Overhead Street Name Sign, Single Mount	D 3C/14 & 3C/20
Overhead Street Name Sign, Double Mount	
Handhole	
Detector Housing	
2'-6" Octagonal Loop - 4 Turns Series	
2" Galvanized Steel Conduit	

A&F ENGINEERING
Transportation & Site Engineering
Creating Order Since 1966
8365 Keystone Crossing, Suite 201, Indianapolis, IN. 46240 (317) 202-0864

RECOMMENDED FOR APPROVAL _____ DESIGN ENGINEER DATE

DESIGNED: MCN DRAWN: MCN
CHECKED: JTR CHECKED: JTR

INDIANA
DEPARTMENT OF TRANSPORTATION

TRAFFIC SIGNAL MODERNIZATION
WASHINGTON ST & PINE ST

HORIZONTAL SCALE	BRIDGE FILE
1" = 20'	N/A
VERTICAL SCALE	DESIGNATION
N/A	1901936
SURVEY BOOK	SHEETS
	54 of 54
CONTRACT	PROJECT
--	--

Z:\2019\19057P - JANSSEN SPAANS - NORTH SPLIT\DWG\SIGNALS\19057P-TS WASHINGTON & OFF RAMP.DWG Created By:MCN Date Created: 1/14/2020

BRIDGE STRUCTURES TECHNICAL /
DESIGN DRAWINGS, GRAPHS, & DATA

PROJECT	DESIGNATION
1600808	1901847
CONTRACT	BRIDGE FILE
B-36910	I65-111-10601 NBL

STRUCTURE INFORMATION				
STRUCTURE	TYPE	SPAN & SKEW	OVER	STATION
I65-111-10601 NBL	PRESTRESSED COMPOSITE CONCRETE BULB-TEE BEAM BRIDGE	1 SPAN: 123'-6" SKEW 02°30'00" LT.	WASHINGTON STREET	117+19.91 LINE "P_ALG_I65-I70"

INDIANA DEPARTMENT OF TRANSPORTATION

BRIDGE PLANS

FOR SPANS OVER 20 FEET

ROUTE: I-65 / I-70 N.B. AT: RP 112+22

PROJECT NO. 1600808 P.E.

1600808 CONST.

NO ADDITIONAL RIGHT OF WAY REQUIRED FOR THIS PROJECT

BRIDGE REPLACEMENT ON I-65 / I-70 N.B. OVER WASHINGTON STREET
LOCATED 0.92 MILES NORTH OF I-70 (SOUTH SPLIT) INTERCHANGE
SECTIONS 1 & 12, TOWNSHIP 15 NORTH, RANGE 3 EAST
CENTER TOWNSHIP, MARION COUNTY INDIANA

END PROJECT No. 1600808
STATION 25+75.00 LINE "P_ALG_I65"

END PROJECT No. 1600808
STATION 41+85.70 LINE "P_ALG_I70"

R. 3 E. | R. 4 E.

T. 16 N.

T. 15 N.

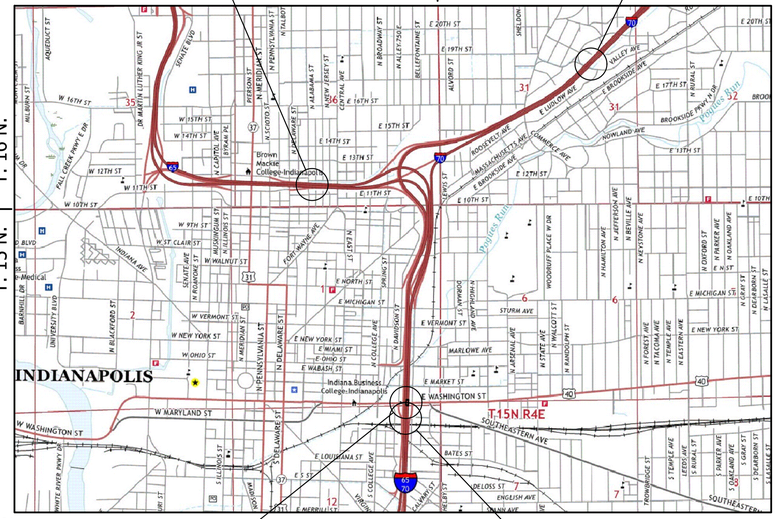

PROJECT LOCATION
BRIDGE FILE No. I65-111-10601 NBL
I-65 / I-70 N.B. OVER WASHINGTON STREET
STA. 117+19.91 LINE "P_ALG_I65-I70"

LOCATION MAP
MARION COUNTY

BEGIN PROJECT No. 1600808
STATION 113+00.00 LINE "P_ALG_I65/I70"

SCALE: 1" = 2000'

TRAFFIC DATA	I-65 / I-70 N.B.	WASHINGTON STREET
A.D.T. (2021)	62,989 V.P.D.	30,000 V.P.D.
A.D.T. (2041)	76,198 V.P.D.	40,451 V.P.D.
D.H.V. (2041)	6,553 V.P.H.	4,491 V.P.D.
DIRECTIONAL DISTRIBUTION	100 %	31 %
TRUCKS	9% D.H.V.	4% D.H.V.
DESIGN DATA		
DESIGN SPEED	55 M.P.H.	35 M.P.H.
PROJECT DESIGN CRITERIA	4R (FREEWAY)	N/A
FUNCTIONAL CLASSIFICATION	URBAN FREEWAY	PRINCIPAL ARTERIAL
RURAL/URBAN	URBAN (BUILT-UP)	URBAN (BUILT-UP)
TERRAIN	LEVEL	LEVEL
ACCESS CONTROL	FULL CONTROL	NONE

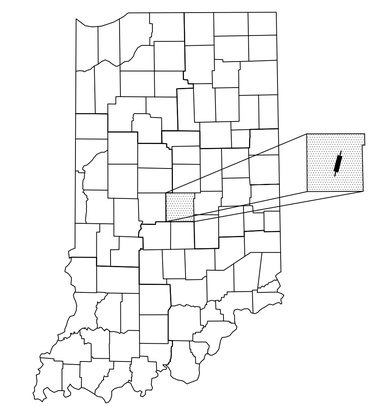

PROJECT LOCATION SHOWN BY

LATITUDE: 39°46'01" N LONGITUDE: 86°08'35" W

BRIDGE LENGTH :	0.024 MI.
ROADWAY LENGTH :	SEE ROAD PLANS
TOTAL LENGTH :	SEE ROAD PLANS
MAX GRADE :	3.50%

HUC: 05120201130020

INDIANA DEPARTMENT OF TRANSPORTATION
STANDARD SPECIFICATIONS DATED 2020 TO
BE USED WITH THESE PLANS.

SUPERIOR CONSTRUCTION

PLANS PREPARED BY: Butler Fairman and Seufert Inc. (317)713-4615 PHONE

CERTIFIED BY: . DATE

APPROVED FOR LETTING: . INDIANA DEPARTMENT OF TRANSPORTATION DATE

BRIDGE FILE		
I65-111-10601 NBL		
DESIGNATION		
1901847		
SURVEY BOOK	SHEET	
ELECTRONIC	1 OF 14	
CONTRACT	PROJECT	
B-36910	1600808	

6412

\\bfsn1241\Jobs5\641200.0000\ProjDevelopment\Design\Drawings\BRIDGES\01_OVER WASHINGTON STREET\Structure 1901847\1901847_S_BR_TTL01.dwg Dylan Piercefield Plot:2/24/2020 5:26 AM Save:2/21/2020 9:09 AM

UTILITIES

REVISIONS

SHEET NO.	DATE	REVISED

KIN PROJECT INFORMATION

DESIGNATION	PROJECT DESCRIPTION	
1600808	COMPLETE ROAD RECONSTRUCTION OF I-65/I-70 FROM WASHINGTON STREET TO I-65 OVER DELAWARE STREET AND I-70 OVER VALLEY AVENUE	LEAD DES
1901935	ITS FOR I-65/I-70 FROM WASHINGTON STREET TO I-65 OVER DELAWARE STREET AND I-70 OVER VALLEY AVENUE	
1901936	SIGNS, LIGHTING, SIGNALS AND MARKING FOR I-65/I-70 FROM WASHINGTON STREET TO I-65 OVER DELAWARE STREET AND I-70 OVER VALLEY AVENUE	
1901847	BRIDGE REPLACEMENT ON I-65/I-70 NB OVER WASHINGTON STREET	
1901848	BRIDGE REPLACEMENT ON I-65/I-70 SB OVER WASHINGTON STREET	
1901849	BRIDGE REPLACEMENT ON I-65/I-70 SB CD OVER WASHINGTON STREET	
1901850	BRIDGE REPLACEMENT ON I-65/I-70 NB OVER MARKET STREET	
1901851	BRIDGE REPLACEMENT ON I-65/I-70 SB OVER MARKET STREET	
1901852	BRIDGE REPLACEMENT ON I-65/I-70 SB CD OVER MARKET STREET	
1901853	BRIDGE REPLACEMENT ON I-65/I-70 NB OVER CSX RAILROAD & OHIO STREET	
1901854	BRIDGE REPLACEMENT ON I-65/I-70 SB OVER CSX RAILROAD & OHIO STREET	
1901855	BRIDGE REPLACEMENT ON I-65/I-70 SB CD OVER CSX RAILROAD & OHIO STREET	
1901856	BRIDGE REPLACEMENT ON I-65/I-70 NB OVER NEW YORK STREET	
1901857	BRIDGE REPLACEMENT ON I-65/I-70 SB OVER NEW YORK STREET	
1901858	BRIDGE REPLACEMENT ON I-65/I-70 SB CD OVER NEW YORK STREET	
1901861	BRIDGE REPLACEMENT ON I-65/I-70 SB CD OVER VERMONT STREET	
1901862	BRIDGE REPLACEMENT ON I-65 NB & I-70 EB OVER MICHIGAN STREET	
1901863	BRIDGE REPLACEMENT ON I-65 SB/I-70 WB OVER MICHIGAN STREET	
1901864	BRIDGE REPLACEMENT ON I-65/I-70 SB CD OVER MICHIGAN STREET	
1901865	BRIDGE REPLACEMENT ON I-65 NB OVER I-70 EB ENTRANCE RAMP	
1901881	BRIDGE REPLACEMENT ON I-65 NB OVER ST. CLAIR STREET	
1901889	NEW BRIDGE CONSTRUCTION ON I-70 EB OVER ST. CLAIR STREET	
1901892	BRIDGE REPLACEMENT ON I-65 SB/I-70 WB OVER ST. CLAIR STREET	
1901896	NEW BRIDGE CONSTRUCTION ON SB CD OVER ST. CLAIR STREET	
1901897	BRIDGE REPLACEMENT ON I-65 NB OVER EAST 10TH STREET	
1901899	NEW BRIDGE CONSTRUCTION ON I-70 EB OVER EAST 10TH STREET	
1901901	BRIDGE REPLACEMENT ON I-65 SB OVER EAST 10TH STREET	
1901903	BRIDGE REPLACEMENT ON I-70 WB OVER EAST 10TH STREET	
1901905	NEW BRIDGE CONSTRUCTION ON SB CD & RAMP OVER EAST 10TH STREET	
1901906	NEW BRIDGE CONSTRUCTION ON I-65 NB CD EXIT RAMP OVER CENTRAL AVENUE	
1901907	BRIDGE REPLACEMENT ON I-65 NB OVER CENTRAL AVENUE	
1901908	BRIDGE REPLACEMENT ON I-65 SB OVER CENTRAL AVENUE	
1901909	NEW BRIDGE CONSTRUCTION ON I-65 SB CD ENTRANCE RAMP OVER CENTRAL AVE.	
1901914	BRIDGE REPLACEMENT ON I-70 WB TO I-65 NB OVER COLLEGE AVENUE	
1901915	BRIDGE REPLACEMENT ON I-65 NB & PENNSYLVANIA EXIT RAMP OVER COLLEGE AVENUE	
1901917	BRIDGE REPLACEMENT ON I-65 SB & SB CD RAMP OVER COLLEGE AVENUE	
1901918	BRIDGE REPLACEMENT ON I-65 SB & DELAWARE ENTRANCE RAMP TO I-70 EB OVER COLLEGE AVENUE & FIVE RAMPS	
1901919	BRIDGE REPLACEMENT ON I-65 NB OVER I-70 WB & RAMP	
1901920	BRIDGE REPLACEMENT ON I-70 WB TO I-65 NB OVER THREE RAMPS	
1901921	BRIDGE REPLACEMENT ON I-65 SB OVER I-70 WB & SB CD RAMP	
1901922	NEW BRIDGE CONSTRUCTION ON I-70 EB OVER I-65 NB	
1901923	BRIDGE REPLACEMENT ON I-70 WB & SB CD OVER LEWIS STREET & MONON TRAIL	
1901925	NEW BRIDGE CONSTRUCTION ON I-70 WB TO I-65 NB OVER LEWIS STREET & MONON TRAIL	
1901927	NOT USED	
1901928	BRIDGE REPLACEMENT ON I-70 EB OVER LEWIS STREET & MONON TRAIL	
1901929	PREVENTATIVE MAINTENANCE ON I-70 WB OVER ROOSEVELT AT COMMERCE AVENUE	
1901930	PREVENTATIVE MAINTENANCE ON I-70 EB OVER ROOSEVELT AT COMMERCE AVENUE	
1901931	PREVENTATIVE MAINTENANCE ON I-70 WB OVER VALLEY AVENUE	
1901932	PREVENTATIVE MAINTENANCE ON I-70 EB OVER VALLEY AVENUE	
1901933	REHABILITATE AND WIDEN ON I-65 OVER 7 STREETS, ACCESS RD, MONORAIL (AKA "MONSTER BRIDGE") - PENNSYLVANIA EXIT RAMP	
1901934	REHABILITATE AND WIDEN ON I-65 OVER 7 STREETS, ACCESS RD, MONORAIL (AKA "MONSTER BRIDGE") - DELAWARE ENTRANCE RAMP	
1902179	BRIDGE REPLACEMENT ON I-65 NB/I70 EB OVER VERMONT STREET	
1902180	BRIDGE REPLACEMENT ON I-65 SB/I70 WB OVER VERMONT STREET	

INDEX

SHEET NO.	DESIGNATION
1	TITLE
2	INDEX
3	MAINTENANCE OF TRAFFIC
4	LAYOUT
5	GENERAL PLAN - PLAN & ELEVATION VIEWS
6	GENERAL PLAN - TYPICAL SECTION
7	BENTS NO. 1 AND NO. 2 DETAILS
8	BENT DETAILS
9	FRAMING PLAN
10	BEAM DETAILS
11	FLOOR DETAILS
12	APPROACH SLAB
13	WALL LAYOUT
14	WALL LAYOUT

RECOMMENDED FOR APPROVAL: _____ DESIGN ENGINEER _____ DATE

DESIGNED: B. WRIGHT DRAWN: L. KIRSCH

CHECKED: B. BUTZ CHECKED: B. WRIGHT

INDIANA
DEPARTMENT OF TRANSPORTATION

NB OVER WASHINGTON

HORIZONTAL SCALE	BRIDGE FILE
N/A	I65-111-10601 NBL
VERTICAL SCALE	DESIGNATION
N/A	1901847
SURVEY BOOK	SHEET
ELECTRONIC	2 OF 14
CONTRACT	PROJECT
B-36910	1600808

BFS NO. 6412

\\bfsn1241\jobs5\641200.0000\Proj.Development\Design\Drawings\BRIDGES\01 OVER WASHINGTON STREET\Structure 1901847\1901847_S_BR_IND01.dwg Dylan Piercefield Plot: 2/24/2020 5:26 AM Save: 2/17/2020 12:12 PM

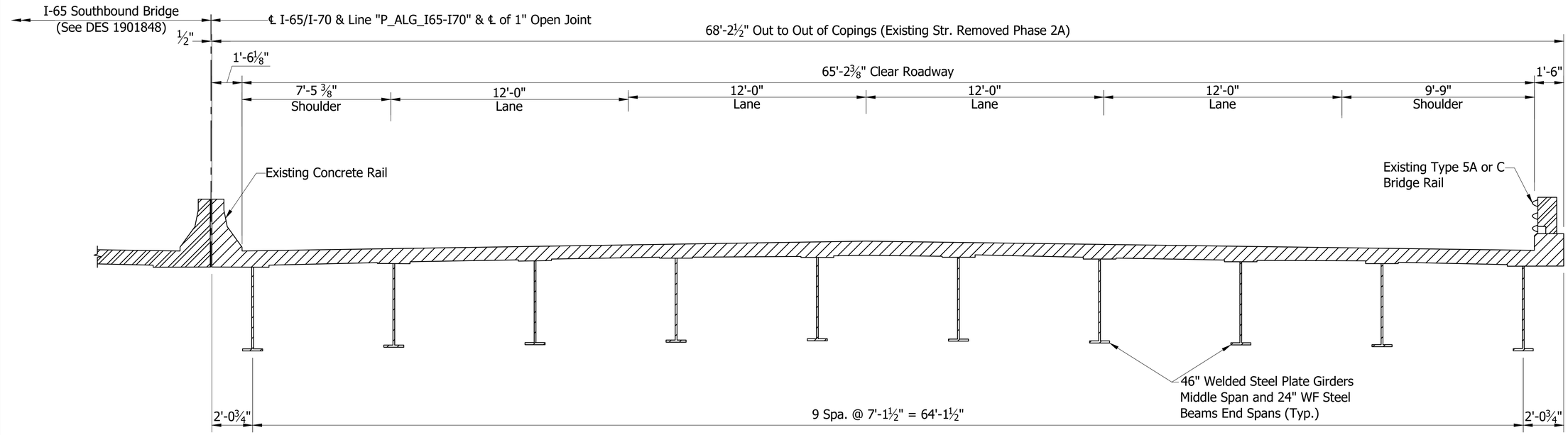

EXISTING NORTHBOUND TYPICAL SECTION

NOT TO SCALE

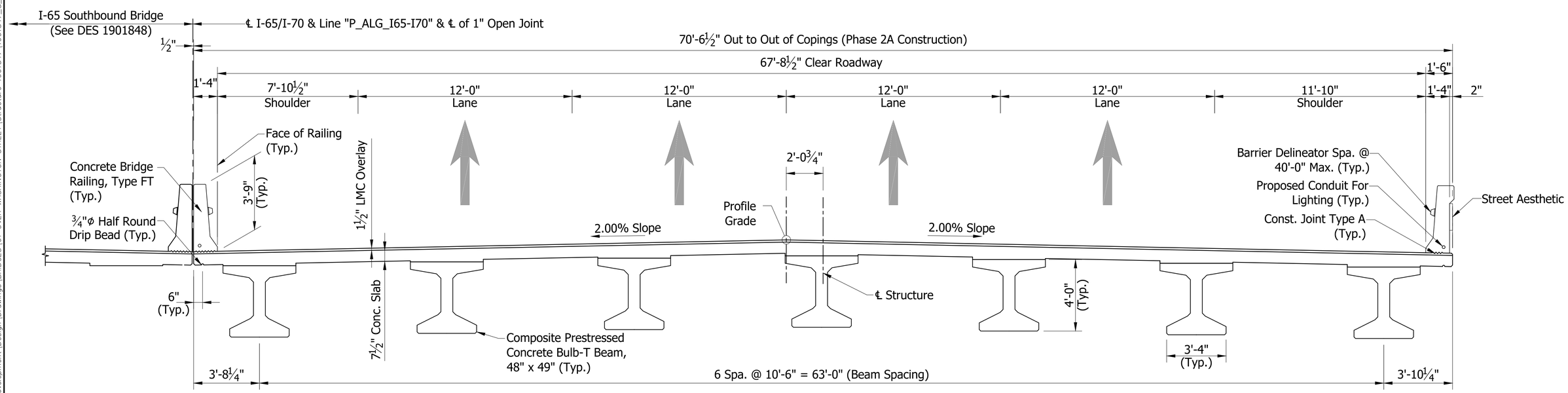

TYPICAL SECTION

Scale: 3/8"= 1'-0"

RECOMMENDED FOR APPROVAL: DESIGN ENGINEER DATE	INDIANA DEPARTMENT OF TRANSPORTATION	HORIZONTAL SCALE: As Noted	BRIDGE FILE: I65-111-10601 NBL
		VERTICAL SCALE: N/A	DESIGNATION: 1901847
DESIGNED: B. WRIGHT DRAWN: K. COFFMAN	MAINTENANCE OF TRAFFIC	SURVEY BOOK: ELECTRONIC	SHEET: 3 OF 14
CHECKED: M. EICHENAUER CHECKED: B. WRIGHT		CONTRACT: B-36910	PROJECT: 1600808

6412

BFS NO.

\\bfsn1241\Jobs5\641200.0000\Proj\Development\Design\Drawings\BRIDGES\01 OVER WASHINGTON STREET\Structure 1901847\1901847_S_BR_MOT01.dwg Dylan Piercefield Plot:2/24/2020 5:26 AM Save:2/17/2020 8:16 AM

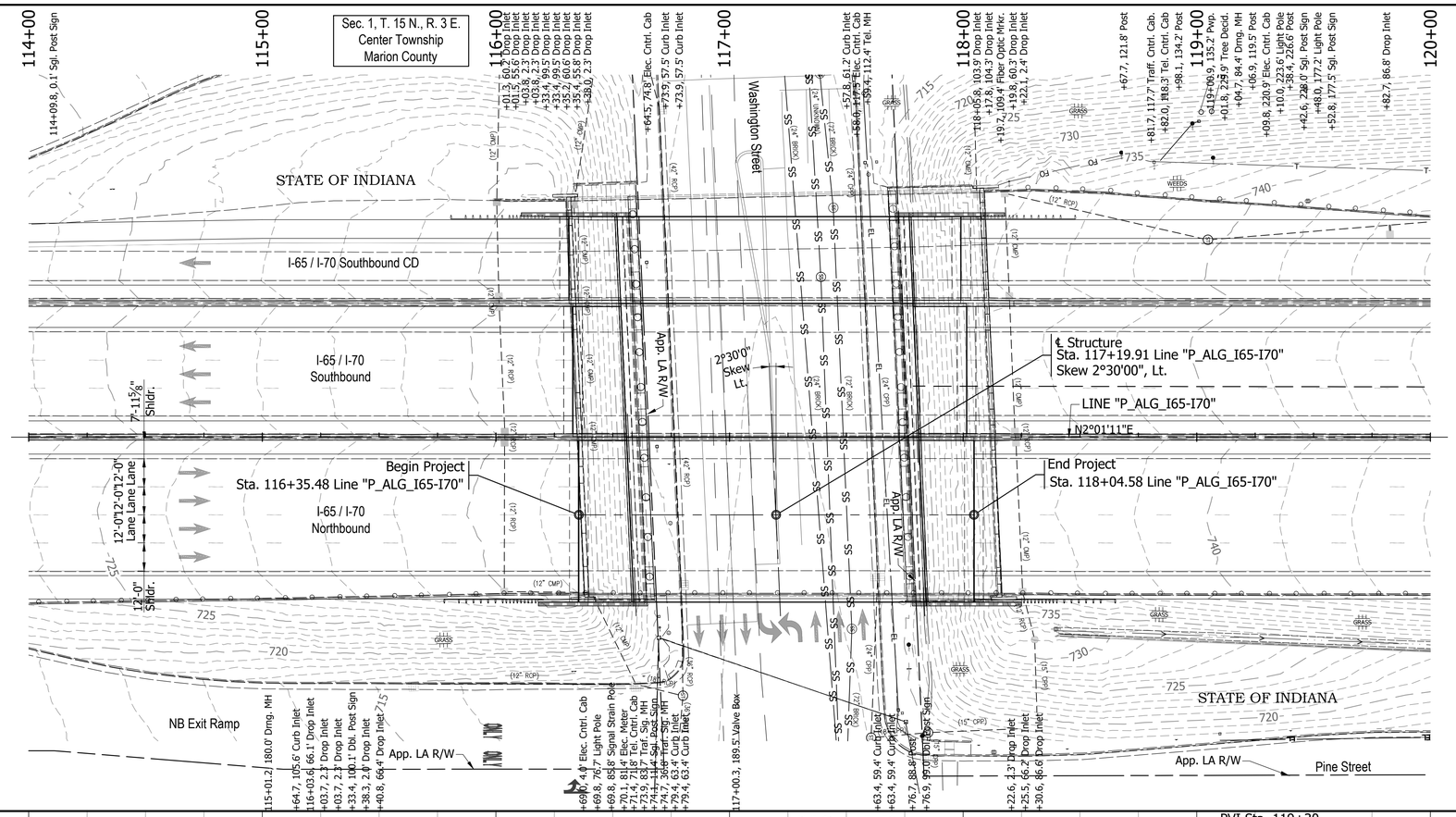

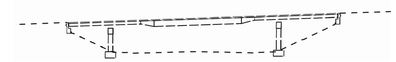

EXISTING STRUCTURE

The existing structure was built in 1974. Structure was rehabilitated in 2003. The structure is a 3-span continuous composite bridge with 46" welded steel plate girders in the middle span and 24" WF steel beams in the end spans.

Span lengths: 1 @ 27'-3", 1 @ 111'-6", 1 @ 38'-6"

Clear roadway 65'-2½". Total length of 179'-10¾"

Existing structure to be removed.

Existing plans are on file with the Indiana Department of Transportation under Bridge File No. I-65-112-5725.

EARTHWORK TABULATION

See Roadway Plans (DES #_____) for earthwork tabulation.

NOTE: ALL TOPOGRAPHY INFORMATION REFERENCED TO LINE "P_ALG_I65-I70" UNLESS NOTED.

ALL R/W ON THIS SHEET DESCRIBED FROM LINE "P_ALG_I65-I70" UNLESS OTHERWISE NOTED

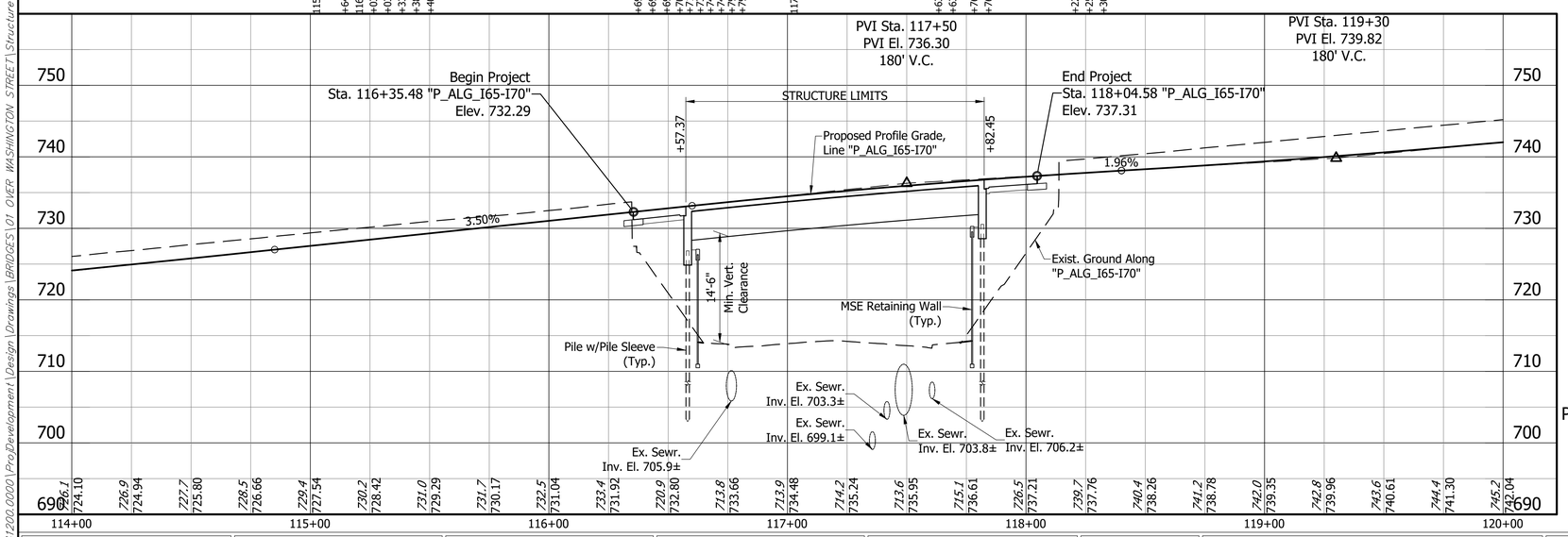

Notes:

1. For R/W and property information, see Location Control Route Survey (DES # _____).
2. For alignment data, see Geometric Layout Sheets (DES #_____).
3. See Road Plans (DES #_____) for Horizontal & Vertical Control Data.

PRESTRESSED COMPOSITE CONCRETE BULB-TEE BEAM BRIDGE
1 SPAN: 123'-6"
67'-8 1/2" CLEAR ROADWAY; SKEW 02°30'00" LT.
I-65 / I-70 N.B. OVER WASHINGTON STREET
MARION COUNTY

RECOMMENDED FOR APPROVAL: _____ DESIGN ENGINEER _____ DATE

DESIGNED: B. WRIGHT DRAWN: L. KIRSCH
CHECKED: B. BUTZ CHECKED: B. WRIGHT

INDIANA
DEPARTMENT OF TRANSPORTATION

LAYOUT

HORIZONTAL SCALE	BRIDGE FILE
1" = 30'	I65-111-10601 NBL
VERTICAL SCALE	DESIGNATION
1" = 10'	1901847
SURVEY BOOK	SHEET
ELECTRONIC	4 OF 14
CONTRACT	PROJECT
B-36910	1600808

BFS NO. 6412

\\vfsnt241\Jobs5\641200.0000\Pro_Development\Design\Drawings\BRIDGES\01 OVER WASHINGTON STREET\Structure 1901847_S_BR_LAY01.dwg Dylan Piercefield Plot:2/24/2020 5:26 AM Save:2/20/2020 4:00 PM

STRUCTURE TO BE BUILT ON A 180' VERTICAL CURVE

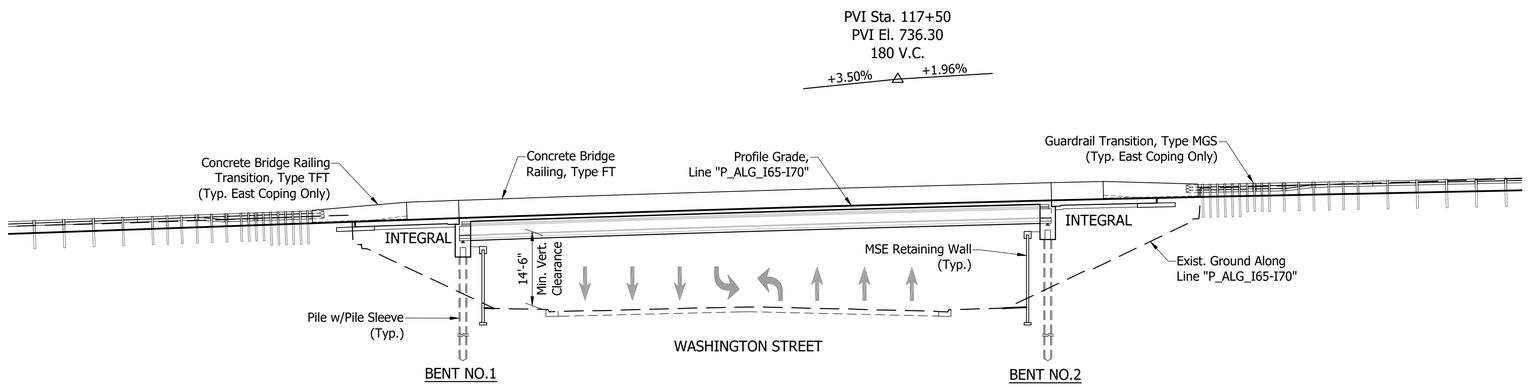

ELEVATION

Scale: 1/16" = 1'-0"

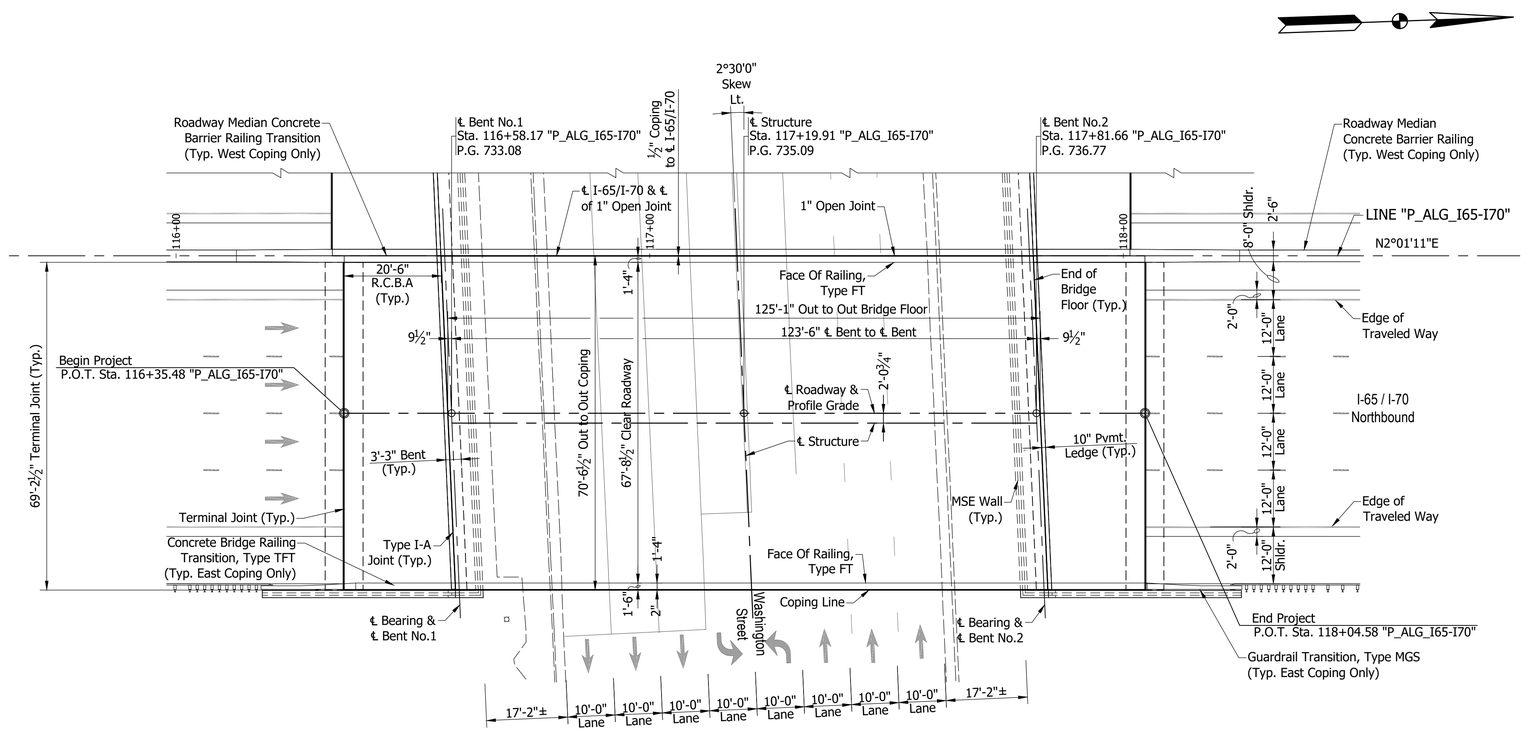

PLAN

Scale: 1/16" = 1'-0"

NOTE:
See Sheet 6 For Typical Section

PRESTRESSED COMPOSITE CONCRETE BULB-TEE BEAM BRIDGE
1 SPAN: 123'-6"
67'-8 1/2" CLEAR ROADWAY; SKEW 02°30'00" LT.
I-65 / I-70 N.B. OVER WASHINGTON STREET
MARION COUNTY

RECOMMENDED FOR APPROVAL: DESIGN ENGINEER DATE	INDIANA DEPARTMENT OF TRANSPORTATION	HORIZONTAL SCALE: As Noted	BRIDGE FILE: I65-111-10601 NBL
		VERTICAL SCALE: N/A	DESIGNATION: 1901847
DESIGNED: B. WRIGHT DRAWN: L. KIRSCH	GENERAL PLAN - PLAN & ELEVATION VIEWS	SURVEY BOOK	SHEET
CHECKED: B. BUTZ CHECKED: B. WRIGHT		ELECTRONIC	5 OF 14
		CONTRACT: B-36910	PROJECT: 1600808

BFS NO. 6412

\\bsn1241\Jobs5\641200.0000\ProjDevelopment\Design\Drawings\BRIDGES\01 OVER WASHINGTON STREET\Structure 1901847\1901847_S_BR_PLN01.dwg Dylan Piercefield Plot:2/24/2020 6:47 AM Save:2/24/2020 6:45 AM

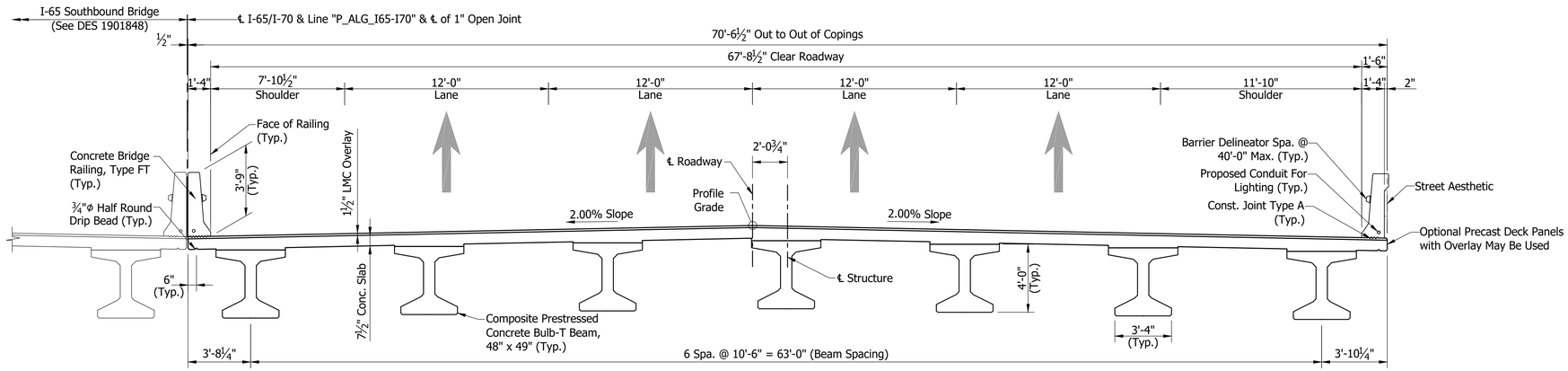

TYPICAL SECTION

Scale: 1/4"= 1'-0"

GENERAL NOTES

The existing structure shall be removed.

Reinforcing bars covering shall be 3 ½" in top and 1" min. in bottom of floor slabs and 3" in footings except bottom steel which shall be 4", and 2" in all other parts, unless noted.

Concrete in floor slab, and diaphragms, barriers, and end bents shall be an alternate Class C in accordance with the Technical Provisions.

Reinforcing Bars in Deck, Barrier, and End Bent Diaphragm Extending into the Deck shall be Stainless Steel. Reinforcing Bars in End Bent Diaphragm not Extending into the Deck and in the Cap shall be Epoxy Coated.

All exposed faces of the MSE walls and reinforced concrete bridge approach slabs shall receive surface seal.

See Bridge Aesthetic Plan for Architectural Details.

DESIGN DATA

LIVE LOAD:

Superstructure and Substructure Designed for HL-93 loading in accordance with the AASHTO LRFD Bridge Design Specifications, 8th Edition, 2017 and its subsequent revisions.

DEAD LOAD:

Designed for Actual Dead Load plus 35 psf of future wearing surface, and 15 psf for SIP Metal Deck Forms.

FLOOR SLAB:

Slab designed with a 7 ½" structural depth and a 1 ½" very early strength LMC wearing surface.

DESIGN STRESSES

CONSTRUCTION LOADING:

The exterior girder has been checked for strength, deflection, and overturning using the construction loads shown below. Cantilever overhang brackets were assumed for support of the deck overhang past the edge of the exterior beam. The finishing machine was assumed to be supported 6 in. outside the vertical coping form. The top overhang brackets were assumed to be located 6 in. past the edge of the vertical coping form. The bottom overhang brackets were assumed to be braced against the intersection of the girder bottom flange and web.

DECK FALSEWORK LOADS:

Designed for 15 psf for permanent metal stay-in-place deck forms, removable deck forms, and 2 ft. exterior walkway.

CONSTRUCTION LIVE LOAD:

Designed for 20 psf extending 2 ft. past the edge of coping and 75 lb/ft vertical force applied at a distance of 6 in. outside the face of coping over a 30 foot length of the deck centered with the finishing machine.

FINISHING-MACHINE LOAD:

4500 lb distributed over 10 ft. along the coping.

WIND LOAD:

Designed for 70 mph horizontal wind load in accordance with LRFD 3.8.1.

ULTIMATE DESIGN STRENGTHS:

Class "A" Concrete	f'c = 3,500 p.s.i.
Class "B" Concrete	f'c = 3,000 p.s.i.
Class "C" Concrete	f'c = 4,000 p.s.i.
Reinforcing Steel (Grade 60)	Fy = 60,000 p.s.i. (barrier)
	Fy = 75,000 p.s.i. (deck)
	Fy = 75,000 p.s.i. (all other locations)

SEISMIC DESIGN DATA:

Seismic Site Class	C
PGA (g)	0.051
S_s (g)	0.12
S_1 (g)	0.051
S_{D1} (g)	0.086
Seismic Design Category	A

PRESTRESSED COMPOSITE CONCRETE BULB-TEE BEAM BRIDGE
1 SPAN: 123'-6"
67'-8 1/2" CLEAR ROADWAY; SKEW 02°30'00" LT.
I-65 / I-70 N.B. OVER WASHINGTON STREET
MARION COUNTY

RECOMMENDED FOR APPROVAL: _____ DESIGN ENGINEER _____ DATE

DESIGNED: V. SATHIRAJU DRAWN: L. KIRSCH
CHECKED: B. WRIGHT CHECKED: M. MATEL

INDIANA
DEPARTMENT OF TRANSPORTATION

GENERAL PLAN - TYPICAL SECTION

HORIZONTAL SCALE	BRIDGE FILE
As Noted	I65-111-10601 NBL
VERTICAL SCALE	DESIGNATION
N/A	1901847
SURVEY BOOK	SHEET
ELECTRONIC	6 OF 14
CONTRACT	PROJECT
B-36910	1600808

BFS NO. 6412

\\bfsn1241\jobs5\641200.0000\ProjDevelopment\Design\Drawings\BRIDGES\01 OVER WASHINGTON STREET\Structure 1901847\1901847_S_BR_PLN02.dwg Dylan Piercefield Plot:2/24/2020 5:27 AM Save:2/20/2020 4:00 PM

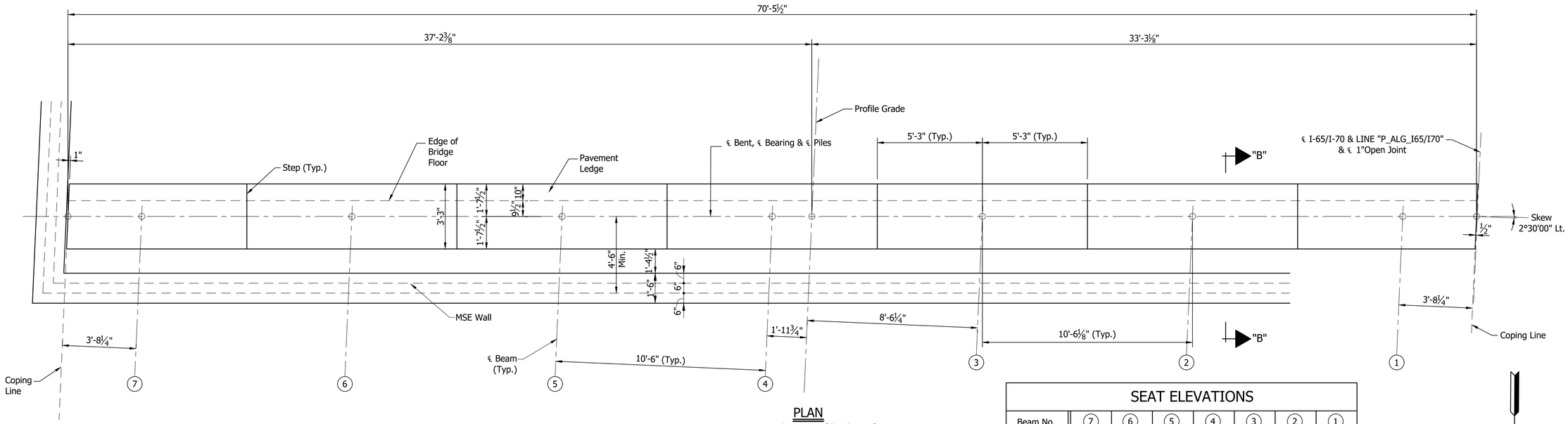

PLAN
BENT NO.1 NB (SHOWN)
BENT NO.2 NB (SIMILAR)
Scale: ⅜"=1'-0"

SEAT ELEVATIONS

Beam No.	7	6	5	4	3	2	1
Bent No.1	727.21	727.28	727.48	727.67	727.52	727.30	727.07
Bent No.2	730.76	730.96	731.16	731.36	731.21	731.00	730.77

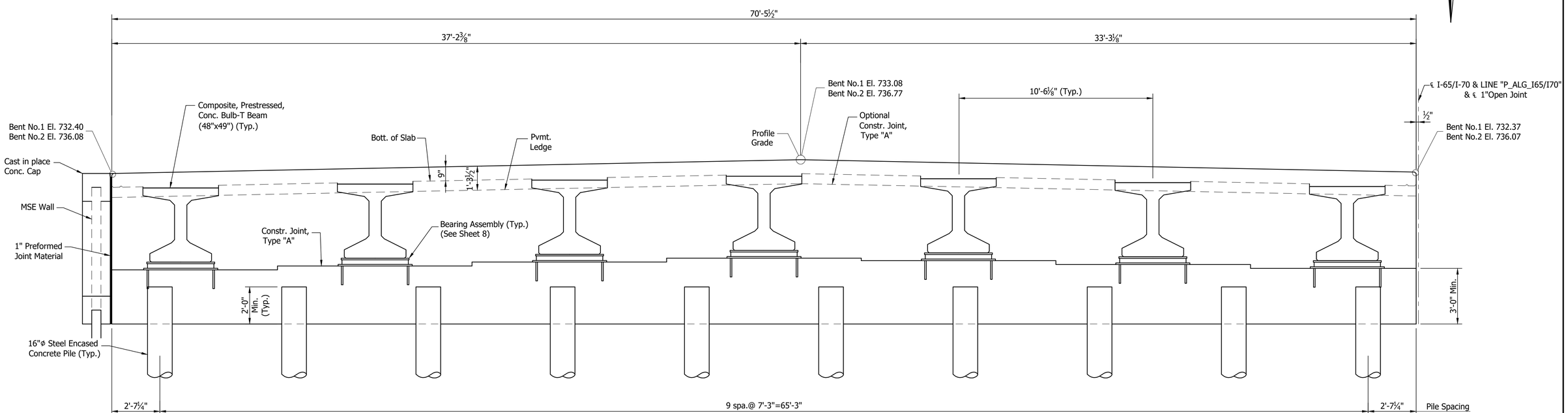

SECTION ALONG ℄ BENT
Scale: ⅜"=1'-0"

RECOMMENDED FOR APPROVAL: DESIGN ENGINEER DATE	INDIANA DEPARTMENT OF TRANSPORTATION	HORIZONTAL SCALE: As Noted	BRIDGE FILE: I65-111-10601 NBL
		VERTICAL SCALE: N/A	DESIGNATION: 1901847
DESIGNED: V. SATHIRAJU DRAWN: D. SHEETZ	BENTS NO. 1 AND NO. 2 DETAILS	SURVEY BOOK: ELECTRONIC	SHEET: 7 OF 14
CHECKED: B. WRIGHT CHECKED: B. WRIGHT		CONTRACT: B-36910	PROJECT: 1600808

6412
BFS NO.

\\bfsnt241\jobs5\641200.0000\ProDevelopment\Design\Drawings\BRIDGES\01_OVER_WASHINGTON_STREET\Structure 1901847\1901847_S_BR_BWT01.dwg Dylan Piercefield Plot:2/24/2020 5:27 AM Save:2/17/2020 8:48 AM

⊛ As an alternate a ⅞"ø x 1'-3" Long Headed Automatic Welded Stud may be used.

⊗ Setting Tolerance of Bottom Plate-Level with to not more than 1/16" below top of Concrete.

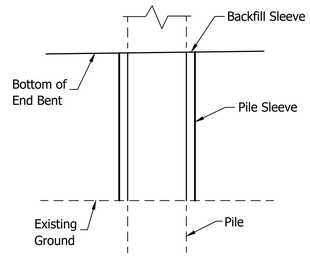

PILE SLEEVE DETAIL

Not to Scale

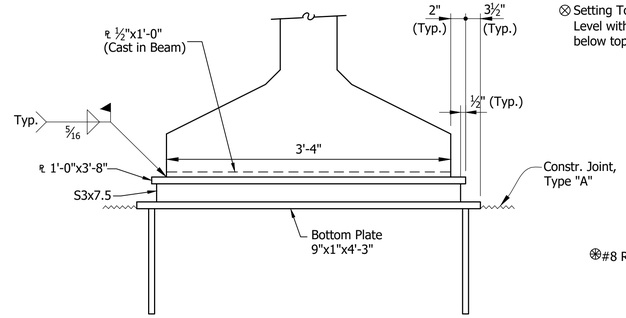

ELEVATION

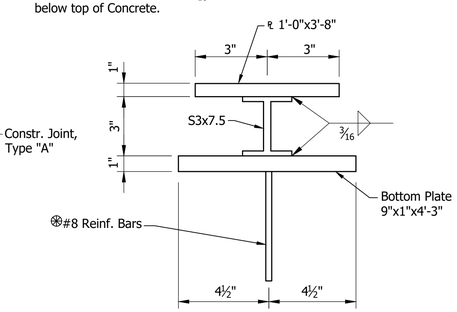

SECTION

BEARING ASSEMBLY

Not to Scale

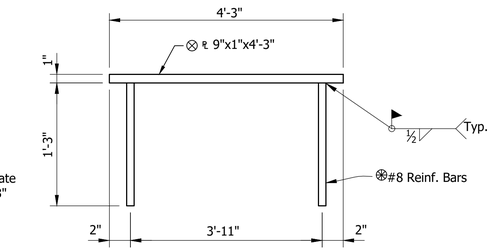

BOTTOM PLATE DETAIL

Not to Scale

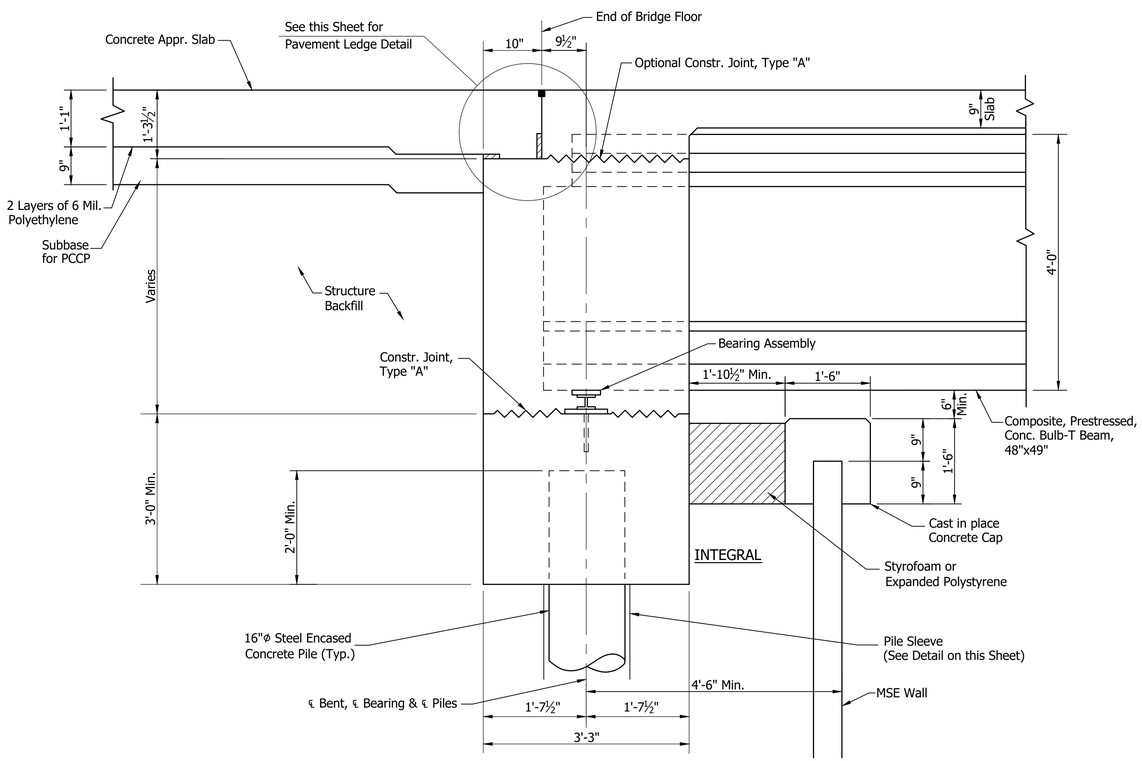

SECTION "B-B"

Not to Scale

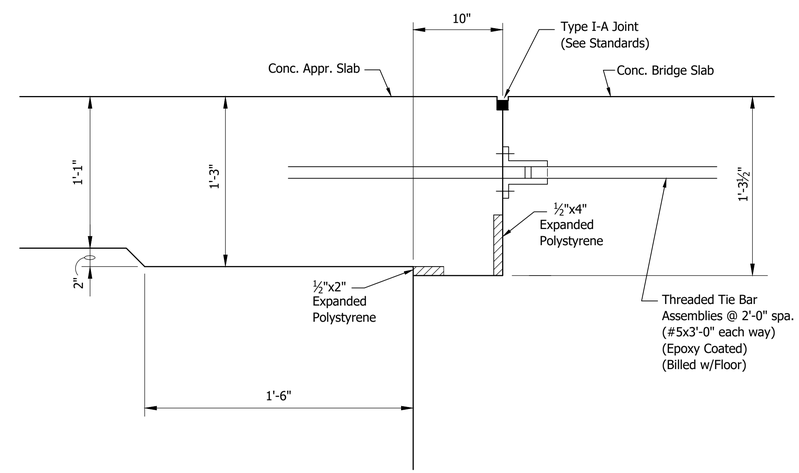

PAVEMENT LEDGE DETAIL

Not to Scale

RECOMMENDED FOR APPROVAL: DESIGN ENGINEER DATE	INDIANA DEPARTMENT OF TRANSPORTATION	HORIZONTAL SCALE: As Noted	BRIDGE FILE: I65-111-10601 NBL	
		VERTICAL SCALE: N/A	DESIGNATION: 1901847	
DESIGNED: V. SATHIRAJU DRAWN: D. SHEETZ	BENT DETAILS	SURVEY BOOK	SHEET	
CHECKED: B. WRIGHT CHECKED: B. WRIGHT		ELECTRONIC	8 OF 14	
		CONTRACT: B-36910	PROJECT: 1600808	

6412

BFS NO.

\\bfsnt241\jobs5\641200.0000\ProjDevelopment\Design\Drawings\BRIDGES\01_OVER WASHINGTON STREET\Structure 1901847\1901847_S_BR_BNT02.dwg Dylan Piercefield Plot:2/24/2020 5:27 AM Save:2/17/2020 8:50 AM

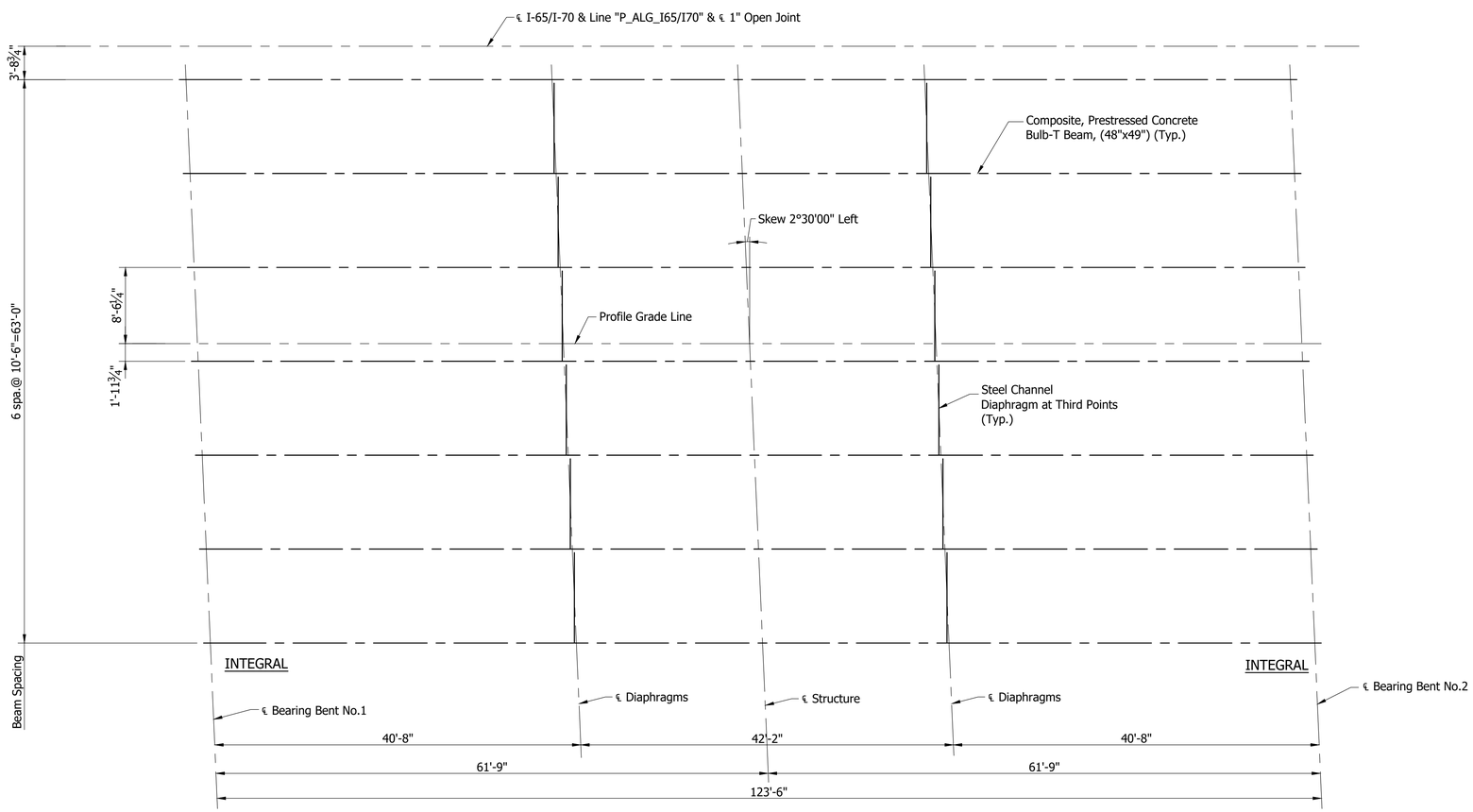

BEAM ERECTION PLAN

Scale: 1/8" = 1'-0"

RECOMMENDED FOR APPROVAL: _____ DESIGN ENGINEER DATE	INDIANA DEPARTMENT OF TRANSPORTATION	HORIZONTAL SCALE: As Noted	BRIDGE FILE: I65-111-10601 NBL	
		VERTICAL SCALE: N/A	DESIGNATION: 1901847	
DESIGNED: V. SATHIRAJU DRAWN: D. SHEETZ	FRAMING PLAN	SURVEY BOOK: ELECTRONIC	SHEET: 9 OF 14	
CHECKED: B. WRIGHT CHECKED: B. WRIGHT		CONTRACT: B-36910	PROJECT: 1600808	

BPS NO. 6412

\\bfsnt241\jobs5\641200.0000\ProjDevelopment\Design\Drawings\BRIDGES\01 OVER WASHINGTON STREET\Structure 1901847\1901847_S_BR_FRM01.dwg Dylan Piercefield Plot-2/24/2020 5:27 AM Save:12/12/2019 7:36 AM

Notes:
Connect Angles to Beams with
⅞"ø H.S. Bolt with Hardened Washer, (ASTM F436)
Connect Channel to Angles with ⅞"ø H.S. Bolt
with Lock Nut, one Hardened Washer and
2 Washers 3"x5/16"x0'-3" (ASTM F436)

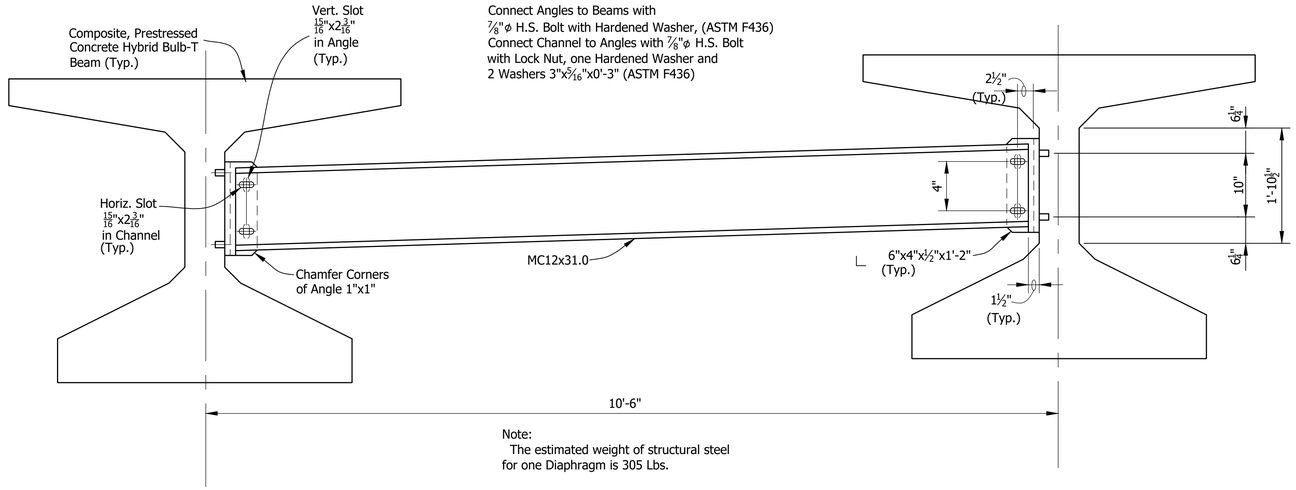

Note:
The estimated weight of structural steel
for one Diaphragm is 305 Lbs.

ELEVATION
Not to Scale

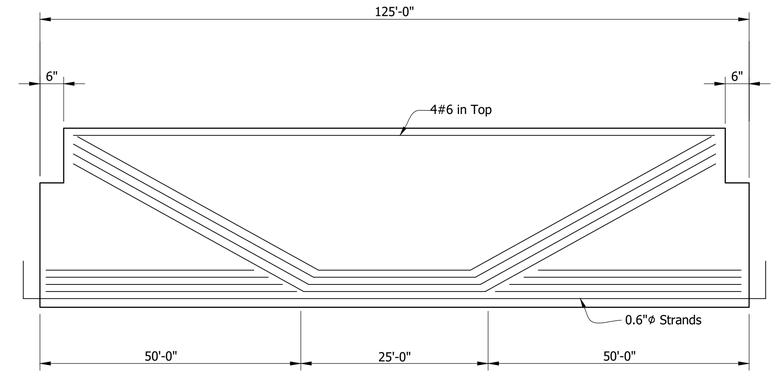

BEAM ELEVATION
SPAN "A"
SHOWING DRAPED STRANDS
Not to Scale

✳ Denotes Epoxy Coated

Note:
Bars 1" Clear
unless noted.

1. Surface Seal req'd on top of all Beams and Exterior Face of Exterior Beams
2. 1"ø Holes or ¾"ø Inserts for Dowels at Bent or Pier. (See Beam Plans)
3. ℞ ½"x12"x3'-2½" at End Bent Ends only

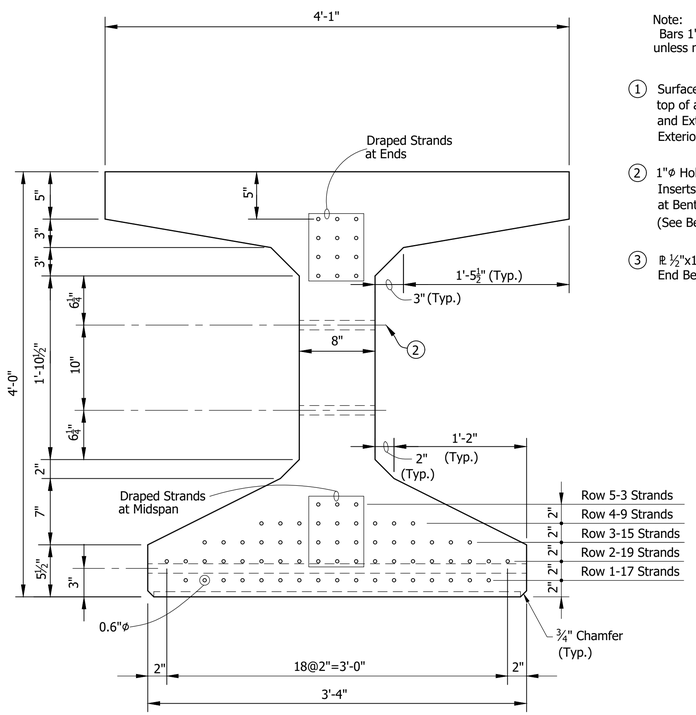

SECTION SHOWING STRANDS

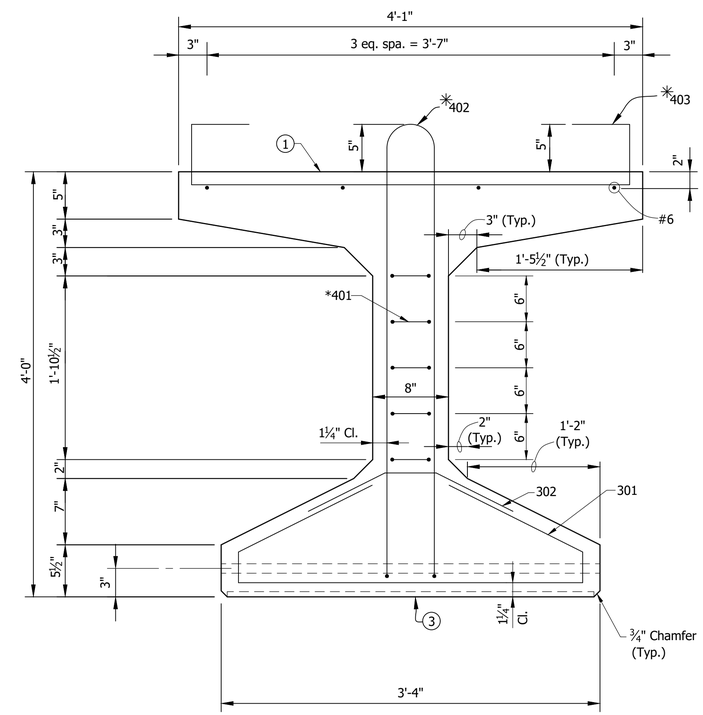

SECTION SHOWING REINFORCING

BEAM SECTIONS
Not to Scale

RECOMMENDED FOR APPROVAL: DESIGN ENGINEER DATE	INDIANA DEPARTMENT OF TRANSPORTATION	HORIZONTAL SCALE: As Noted	BRIDGE FILE: I65-111-10601 NBL
		VERTICAL SCALE: N/A	DESIGNATION: 1901847
DESIGNED: V. SATHIRAJU DRAWN: J. BIER	BEAM DETAILS	SURVEY BOOK	SHEET
CHECKED: B. WRIGHT CHECKED: B. WRIGHT		ELECTRONIC	10 OF 14
		CONTRACT: B-36910	PROJECT: 1600808

BFS NO. 6412

\\bfsn1241\jobs5\641200.0000\Proj\Development\Design\Drawings\BRIDGES\01 OVER WASHINGTON STREET\Structure 1901847\1901847_S_BR_BMD01.dwg Dylan Piercefield Plot:2/24/2020 5:27 AM Save:12/12/2019 7:38 AM

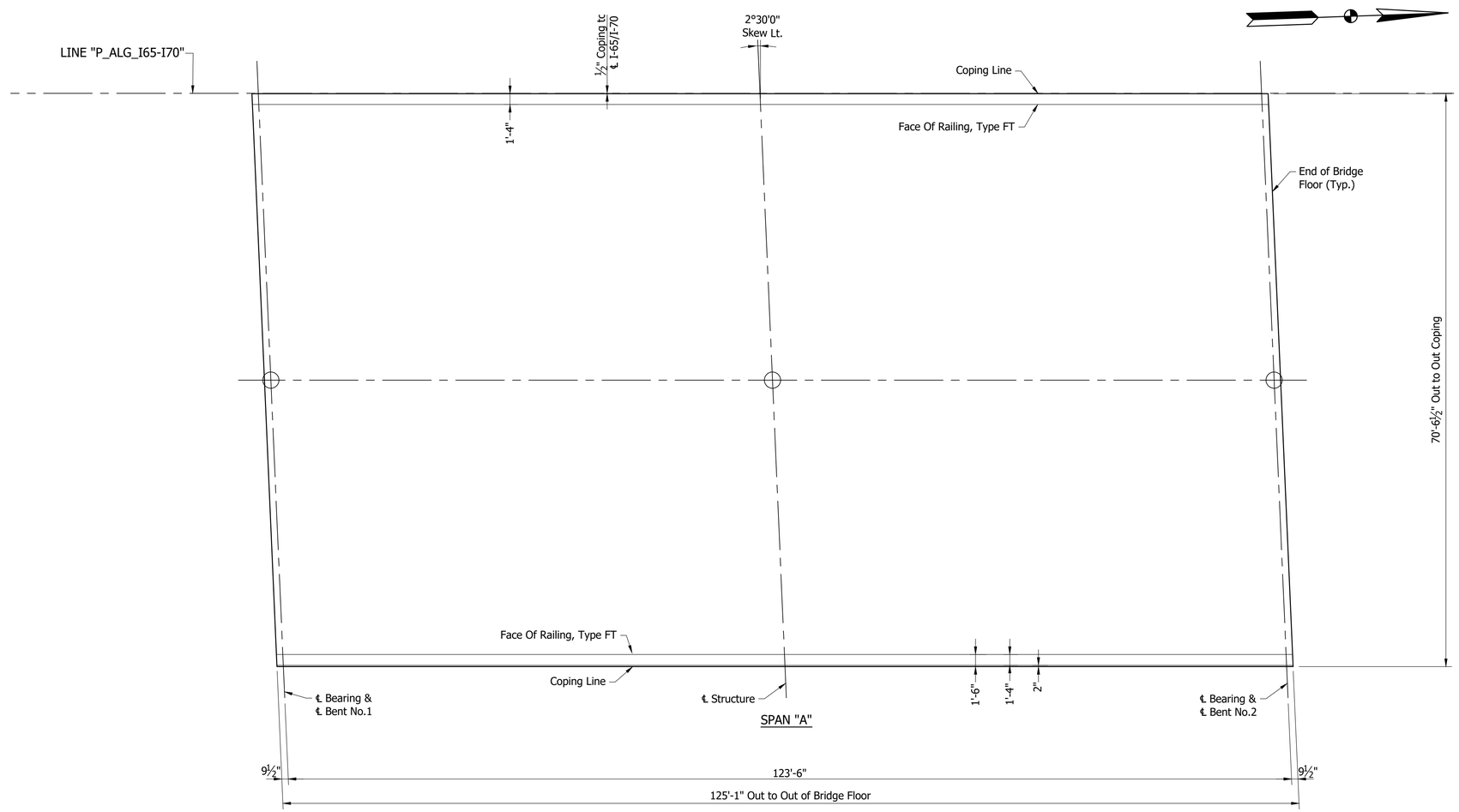

FLOOR PLAN

Scale: 1/8" = 1'-0"

NOTE:
See Sheet ____ For _____

	RECOMMENDED FOR APPROVAL: _____ DESIGN ENGINEER _____ DATE	INDIANA DEPARTMENT OF TRANSPORTATION	HORIZONTAL SCALE: As Noted	BRIDGE FILE: I65-111-10601 NBL
			VERTICAL SCALE: N/A	DESIGNATION: 1901847
	DESIGNED: B. WRIGHT DRAWN: L. KIRSCH	FLOOR DETAILS	SURVEY BOOK: ELECTRONIC	SHEET: 11 OF 14
	CHECKED: B. BUTZ CHECKED: B. WRIGHT		CONTRACT: B-36910	PROJECT: 1600808

6412

BFS NO.

\\bfsn1241\Jobs5\641200.0000\ProDevelopment\Design\Drawings\BRIDGES\01 OVER WASHINGTON STREET\Structure 1901847\1901847_S_BR_FLR01.dwg Dylan Piercefield Plot:2/24,2020 5:27 AM Save:1/31,2020 6:03 AM

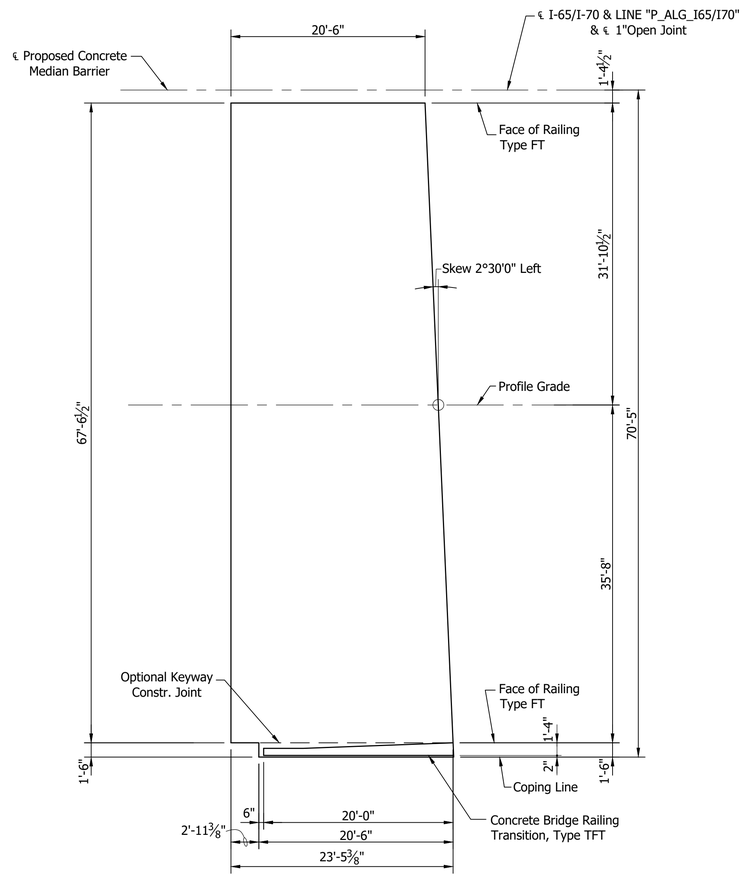

PLAN
SOUTH SLAB
Scale: ⅛"=1'-0"

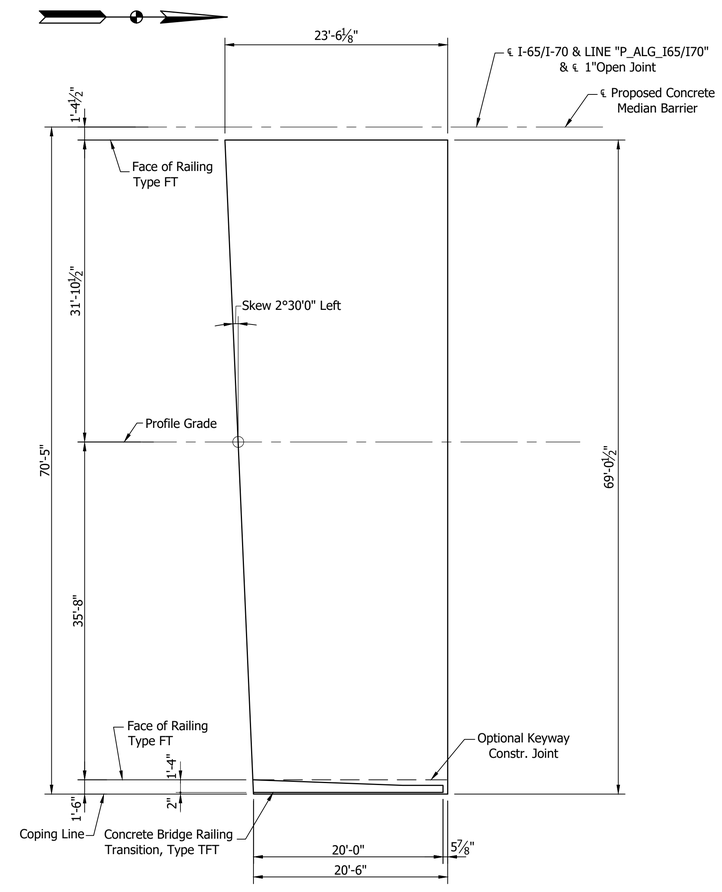

PLAN
NORTH SLAB
Scale: ⅛"=1'-0"

RECOMMENDED FOR APPROVAL: DESIGN ENGINEER DATE	INDIANA DEPARTMENT OF TRANSPORTATION	HORIZONTAL SCALE: As Noted	BRIDGE FILE: I65-111-10601 NBL	
		VERTICAL SCALE: N/A	DESIGNATION: 1901847	
DESIGNED: D. SHEETZ DRAWN: D. SHEETZ	APPROACH SLAB	SURVEY BOOK: ELECTRONIC	SHEET: 12 OF 14	
CHECKED: B. WRIGHT CHECKED: M. MATEL		CONTRACT: B-36910	PROJECT: 1600808	

6412

BFS NO.

\\vfsnt241\jobs5\641200.0000\ProDevelopment\Design\Drawings\BRIDGES\01 OVER WASHINGTON STREET\Structure 1901842\1901842_S_BR_AP501.dwg Dylan Piercefield Plot:2/24/2020 5:27 AM Save:1/27/2020 8:39 AM

\\bfsn1241\Jobs5\641200.0000\Proj\Development\Design\Drawings\BRIDGES\01_OVER WASHINGTON STREET\Structure 1901847\1901847_S_BR_WL01.dwg Dylan Piercefield Plot:2/24/2020 5:27 AM Save:2/20/2020 11:31 AM

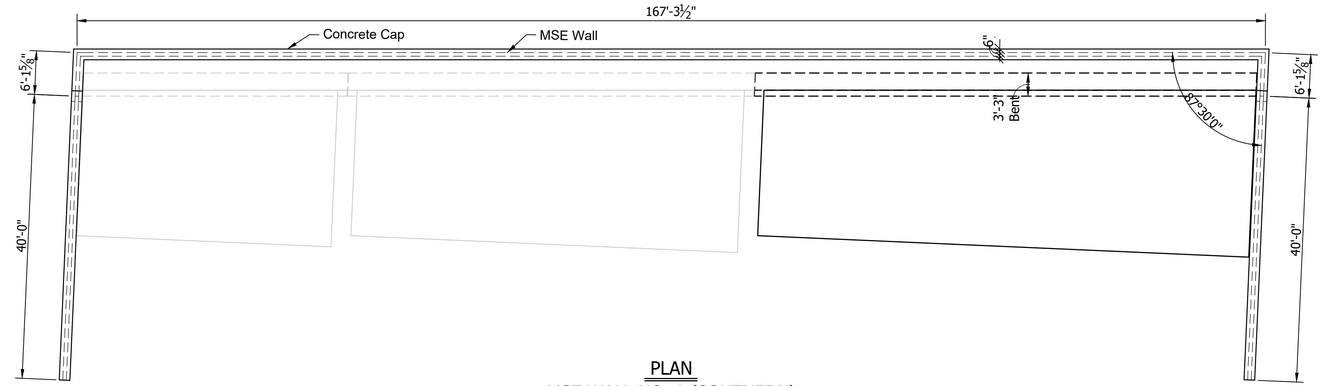

PLAN
MSE WALL NO. 1 (SOUTHERN)
Scale: 3/32"=1'-0"

NOTE:
Elevation Looking At Back Face of Wall

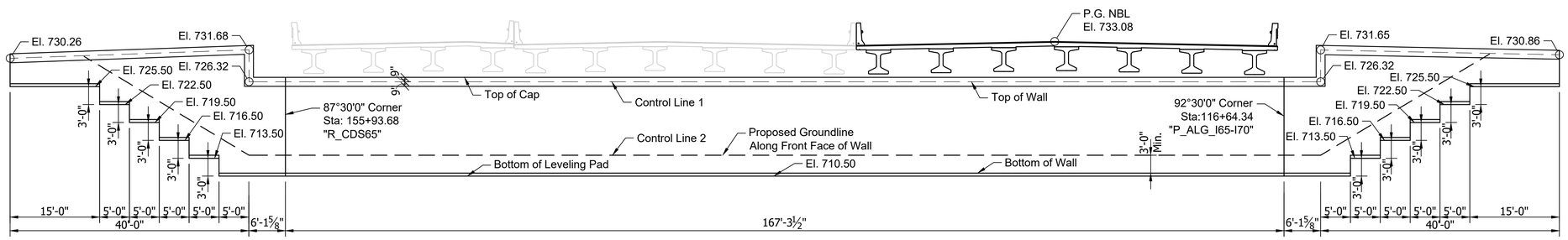

ELEVATION
MSE WALL NO. 1 (SOUTHERN)
Scale: 3/32"=1'-0"

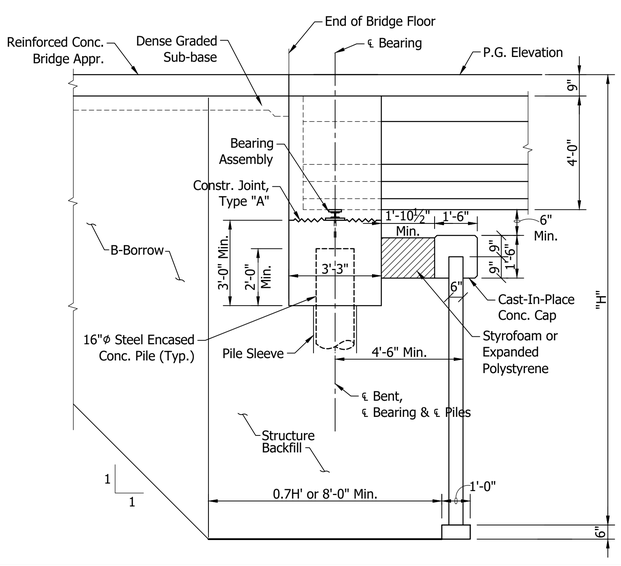

SECTION
MSE WALL NO. 1
Scale: 3/8"=1'-0"

	RECOMMENDED FOR APPROVAL: DESIGN ENGINEER DATE	INDIANA DEPARTMENT OF TRANSPORTATION	HORIZONTAL SCALE: As Noted	BRIDGE FILE: I65-111-10601 NBL
			VERTICAL SCALE: N/A	DESIGNATION: 1901847
	DESIGNED: B. WRIGHT DRAWN: D. PIERCEFIELD	WALL LAYOUT	SURVEY BOOK: ELECTRONIC	SHEET: 13 OF 14
	CHECKED: M. EICHENAUER CHECKED: B. WRIGHT		CONTRACT: B-36910	PROJECT: 1600808

6412
BFS NO.

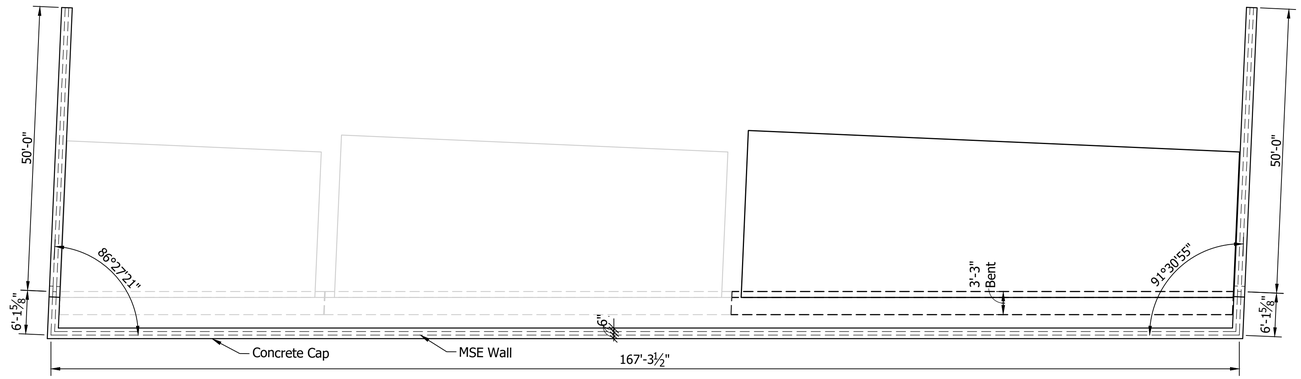

PLAN
MSE WALL NO. 2 (NORTHERN)
Scale: 3/32"=1'-0"

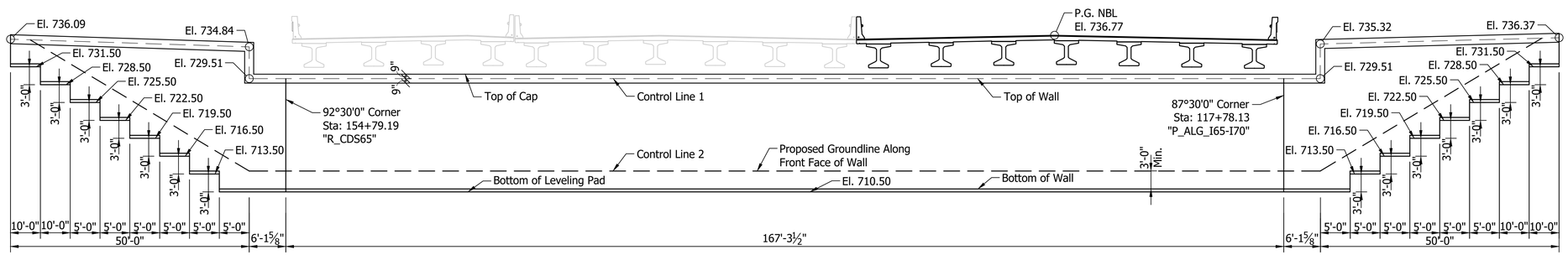

ELEVATION
MSE WALL NO. 2 (NORTHERN)
Scale: 3/32"=1'-0"

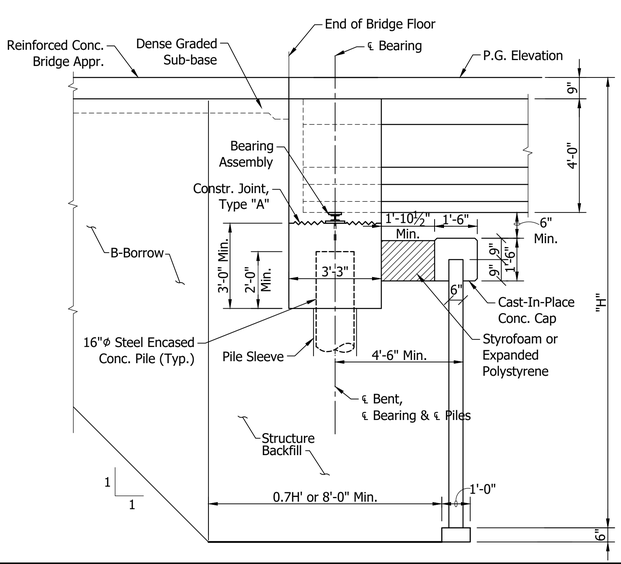

SECTION
MSE WALL NO. 2
Scale: 3/8"=1'-0"

RECOMMENDED FOR APPROVAL: DESIGN ENGINEER DATE	INDIANA DEPARTMENT OF TRANSPORTATION	HORIZONTAL SCALE: As Noted	BRIDGE FILE: I65-111-10601 NBL
		VERTICAL SCALE: N/A	DESIGNATION: 1901847
DESIGNED: B. WRIGHT DRAWN: D. PIERCEFIELD	WALL LAYOUT	SURVEY BOOK: ELECTRONIC	SHEET: 14 OF 14
CHECKED: M. EICHENAUER CHECKED: B. WRIGHT		CONTRACT: B-36910	PROJECT: 1600808

BFS NO. 6412

\\bfsn1241\jobs5\641200.0000\ProjDevelopment\Design\Drawings\BRIDGES\01 OVER WASHINGTON STREET\Structure 1901847\1901847_S_BR_WLL02.dwg Dylan Piercefield Plot:2/24/2020 11:04 AM Save:2/20/2020 11:42 AM

PROJECT	DESIGNATION
1600808	1901848
CONTRACT	BRIDGE FILE
B-36910	I65-111-10602 SBL

STRUCTURE INFORMATION				
STRUCTURE	TYPE	SPAN & SKEW	OVER	STATION
I65-111-10602 SBL	PRESTRESSED COMPOSITE CONCRETE BULB-TEE BEAM BRIDGE	1 SPAN: 123'-6" SKEW 02°30'00" LT.	WASHINGTON STREET	117+17.02 LINE "P_ALG_I65-I70"

INDIANA DEPARTMENT OF TRANSPORTATION

BRIDGE PLANS

FOR SPANS OVER 20 FEET

ROUTE: I-65 / I-70 S.B. AT: RP 112+22

PROJECT NO. 1600808 P.E.

1600808 CONST.

NO ADDITIONAL RIGHT OF WAY REQUIRED FOR THIS PROJECT

BRIDGE REPLACEMENT ON I-65 / I-70 S.B. OVER WASHINGTON STREET
LOCATED 0.92 MILES NORTH OF I-70 (SOUTH SPLIT) INTERCHANGE
SECTIONS 1 & 12, TOWNSHIP 15 NORTH, RANGE 3 EAST
CENTER TOWNSHIP, MARION COUNTY INDIANA

TRAFFIC DATA	I-65 / I-70 S.B.	WASHINGTON STREET
A.D.T. (2021)	58,288 V.P.D.	30,000 V.P.D.
A.D.T. (2041)	64,063 V.P.D.	40,451 V.P.D.
D.H.V. (2041)	5,125 V.P.H.	4,491 V.P.D.
DIRECTIONAL DISTRIBUTION	100 %	31 %
TRUCKS	10% D.H.V.	4% D.H.V.
DESIGN DATA		
DESIGN SPEED	55 M.P.H.	35 M.P.H.
PROJECT DESIGN CRITERIA	4R (FREEWAY)	N/A
FUNCTIONAL CLASSIFICATION	URBAN FREEWAY	PRINCIPAL ARTERIAL
RURAL/URBAN	URBAN (BUILT-UP)	URBAN (BUILT-UP)
TERRAIN	LEVEL	LEVEL
ACCESS CONTROL	FULL CONTROL	NONE

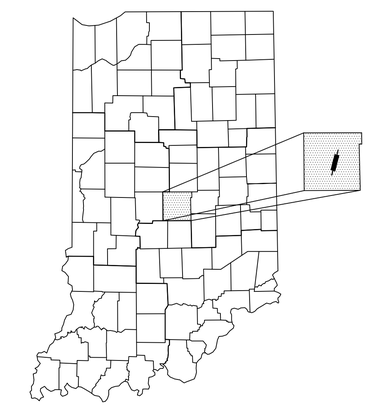

PROJECT LOCATION SHOWN BY

LATITUDE: 39°46'01" N LONGITUDE: 86°08'35" W

BRIDGE LENGTH :	0.024 MI.
ROADWAY LENGTH :	SEE ROAD PLANS
TOTAL LENGTH :	SEE ROAD PLANS
MAX GRADE :	3.50%

HUC: 05120201130020

END PROJECT No. 1600808
STATION 25+75.00 LINE "P_ALG_I65"

END PROJECT No. 1600808
STATION 41+85.70 LINE "P_ALG_I70"

R. 3 E. | R. 4 E.

T. 16 N.

T. 15 N.

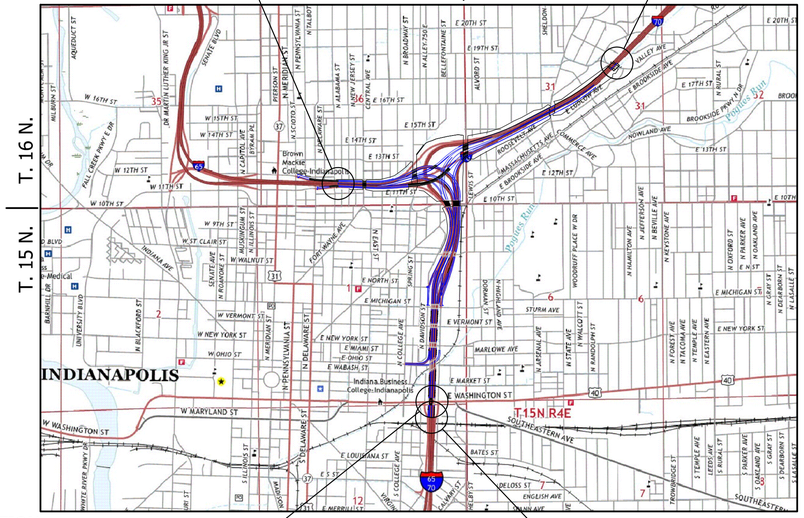

SCALE: 1" = 2000'

PROJECT LOCATION
BRIDGE FILE No. I65-111-10602 SBL
I-65 / I-70 S.B. OVER WASHINGTON STREET
STA. 117+17.02 LINE "P_ALG_I65-I70"

LOCATION MAP
MARION COUNTY

BEGIN PROJECT No. 1600808
STATION 113+00.00 LINE "P_ALG_I65/I70"

INDIANA DEPARTMENT OF TRANSPORTATION
STANDARD SPECIFICATIONS DATED 2020 TO
BE USED WITH THESE PLANS.

SUPERIOR CONSTRUCTION

PLANS PREPARED BY: Butler Fairman and Seufert Inc. (317)713-4615 PHONE

CERTIFIED BY: . DATE

APPROVED FOR LETTING: . INDIANA DEPARTMENT OF TRANSPORTATION DATE

BRIDGE FILE	
I65-111-10602 SBL	
DESIGNATION	
1901848	
SURVEY BOOK	SHEET
ELECTRONIC	1 OF 14
CONTRACT	PROJECT
B-36910	1600808

6412

\\bfsnt241\Jobs5\641200.0000\ProDevelopment\Design\Drawings\BRIDGES\01 OVER WASHINGTON STREET\Structure 1901848\901848_S_BR_TTL01.dwg Dylan Piercefield Plot:2/24/2020 5:29 AM Save:2/21/2020 9:22 AM

UTILITIES

REVISIONS

SHEET NO.	DATE	REVISED

KIN PROJECT INFORMATION

DESIGNATION	PROJECT DESCRIPTION	
1600808	COMPLETE ROAD RECONSTRUCTION OF I-65/I-70 FROM WASHINGTON STREET TO I-65 OVER DELAWARE STREET AND I-70 OVER VALLEY AVENUE	LEAD DES
1901935	ITS FOR I-65/I-70 FROM WASHINGTON STREET TO I-65 OVER DELAWARE STREET AND I-70 OVER VALLEY AVENUE	
1901936	SIGNS, LIGHTING, SIGNALS AND MARKING FOR I-65/I-70 FROM WASHINGTON STREET TO I-65 OVER DELAWARE STREET AND I-70 OVER VALLEY AVENUE	
1901847	BRIDGE REPLACEMENT ON I-65/I-70 NB OVER WASHINGTON STREET	
1901848	BRIDGE REPLACEMENT ON I-65/I-70 SB OVER WASHINGTON STREET	
1901849	BRIDGE REPLACEMENT ON I-65/I-70 SB CD OVER WASHINGTON STREET	
1901850	BRIDGE REPLACEMENT ON I-65/I-70 NB OVER MARKET STREET	
1901851	BRIDGE REPLACEMENT ON I-65/I-70 SB OVER MARKET STREET	
1901852	BRIDGE REPLACEMENT ON I-65/I-70 SB CD OVER MARKET STREET	
1901853	BRIDGE REPLACEMENT ON I-65/I-70 NB OVER CSX RAILROAD & OHIO STREET	
1901854	BRIDGE REPLACEMENT ON I-65/I-70 SB OVER CSX RAILROAD & OHIO STREET	
1901855	BRIDGE REPLACEMENT ON I-65/I-70 SB CD OVER CSX RAILROAD & OHIO STREET	
1901856	BRIDGE REPLACEMENT ON I-65/I-70 NB OVER NEW YORK STREET	
1901857	BRIDGE REPLACEMENT ON I-65/I-70 SB OVER NEW YORK STREET	
1901858	BRIDGE REPLACEMENT ON I-65/I-70 SB CD OVER NEW YORK STREET	
1901861	BRIDGE REPLACEMENT ON I-65/I-70 SB CD OVER VERMONT STREET	
1901862	BRIDGE REPLACEMENT ON I-65 NB & I-70 EB OVER MICHIGAN STREET	
1901863	BRIDGE REPLACEMENT ON I-65 SB/I-70 WB OVER MICHIGAN STREET	
1901864	BRIDGE REPLACEMENT ON I-65/I-70 SB CD OVER MICHIGAN STREET	
1901865	BRIDGE REPLACEMENT ON I-65 NB OVER I-70 EB ENTRANCE RAMP	
1901881	BRIDGE REPLACEMENT ON I-65 NB OVER ST. CLAIR STREET	
1901889	NEW BRIDGE CONSTRUCTION ON I-70 EB OVER ST. CLAIR STREET	
1901892	BRIDGE REPLACEMENT ON I-65 SB/I-70 WB OVER ST. CLAIR STREET	
1901896	NEW BRIDGE CONSTRUCTION ON SB CD OVER ST. CLAIR STREET	
1901897	BRIDGE REPLACEMENT ON I-65 NB OVER EAST 10TH STREET	
1901899	NEW BRIDGE CONSTRUCTION ON I-70 EB OVER EAST 10TH STREET	
1901901	BRIDGE REPLACEMENT ON I-65 SB OVER EAST 10TH STREET	
1901903	BRIDGE REPLACEMENT ON I-70 WB OVER EAST 10TH STREET	
1901905	NEW BRIDGE CONSTRUCTION ON SB CD & RAMP OVER EAST 10TH STREET	
1901906	NEW BRIDGE CONSTRUCTION ON I-65 NB CD EXIT RAMP OVER CENTRAL AVENUE	
1901907	BRIDGE REPLACEMENT ON I-65 NB OVER CENTRAL AVENUE	
1901908	BRIDGE REPLACEMENT ON I-65 SB OVER CENTRAL AVENUE	
1901909	NEW BRIDGE CONSTRUCTION ON I-65 SB CD ENTRANCE RAMP OVER CENTRAL AVE.	
1901914	BRIDGE REPLACEMENT ON I-70 WB TO I-65 NB OVER COLLEGE AVENUE	
1901915	BRIDGE REPLACEMENT ON I-65 NB & PENNSYLVANIA EXIT RAMP OVER COLLEGE AVENUE	
1901917	BRIDGE REPLACEMENT ON I-65 SB & SB CD RAMP OVER COLLEGE AVENUE	
1901918	BRIDGE REPLACEMENT ON I-65 SB & DELAWARE ENTRANCE RAMP TO I-70 EB OVER COLLEGE AVENUE & FIVE RAMPS	
1901919	BRIDGE REPLACEMENT ON I-65 NB OVER I-70 WB & RAMP	
1901920	BRIDGE REPLACEMENT ON I-70 WB TO I-65 NB OVER THREE RAMPS	
1901921	BRIDGE REPLACEMENT ON I-65 SB OVER I-70 WB & SB CD RAMP	
1901922	NEW BRIDGE CONSTRUCTION ON I-70 EB OVER I-65 NB	
1901923	BRIDGE REPLACEMENT ON I-70 WB & SB CD OVER LEWIS STREET & MONON TRAIL	
1901925	NEW BRIDGE CONSTRUCTION ON I-70 WB TO I-65 NB OVER LEWIS STREET & MONON TRAIL	
1901927	NOT USED	
1901928	BRIDGE REPLACEMENT ON I-70 EB OVER LEWIS STREET & MONON TRAIL	
1901929	PREVENTATIVE MAINTENANCE ON I-70 WB OVER ROOSEVELT AT COMMERCE AVENUE	
1901930	PREVENTATIVE MAINTENANCE ON I-70 EB OVER ROOSEVELT AT COMMERCE AVENUE	
1901931	PREVENTATIVE MAINTENANCE ON I-70 WB OVER VALLEY AVENUE	
1901932	PREVENTATIVE MAINTENANCE ON I-70 EB OVER VALLEY AVENUE	
1901933	REHABILITATE AND WIDEN ON I-65 OVER 7 STREETS, ACCESS RD, MONORAIL (AKA "MONSTER BRIDGE") - PENNSYLVANIA EXIT RAMP	
1901934	REHABILITATE AND WIDEN ON I-65 OVER 7 STREETS, ACCESS RD, MONORAIL (AKA "MONSTER BRIDGE") - DELAWARE ENTRANCE RAMP	
1902179	BRIDGE REPLACEMENT ON I-65 NB/I70 EB OVER VERMONT STREET	
1902180	BRIDGE REPLACEMENT ON I-65 SB/I70 WB OVER VERMONT STREET	

INDEX

SHEET NO.	DESIGNATION
1	TITLE
2	INDEX
3	MAINTENANCE OF TRAFFIC
4	LAYOUT
5	GENERAL PLAN - PLAN & ELEVATION VIEWS
6	GENERAL PLAN - TYPICAL SECTION
7	BENTS NO. 1 AND NO. 2 DETAILS
8	BENT DETAILS
9	FRAMING PLAN
10	BEAM DETAILS
11	FLOOR DETAILS
12	APPROACH SLAB
13	WALL LAYOUT
14	WALL LAYOUT

RECOMMENDED FOR APPROVAL: _____ DESIGN ENGINEER _____ DATE

DESIGNED: B. WRIGHT DRAWN: K. COFFMAN

CHECKED: M. EICHENAUER CHECKED: B. WRIGHT

INDIANA
DEPARTMENT OF TRANSPORTATION

INDEX

HORIZONTAL SCALE	BRIDGE FILE
N/A	I65-111-10602 SBL
VERTICAL SCALE	DESIGNATION
N/A	1901848
SURVEY BOOK	SHEET
ELECTRONIC	2 OF 14
CONTRACT	PROJECT
B-36910	1600808

BFS NO. 6412

\\bfsn1241\jobs5\641200.0000\Proj.Development\Design\Drawings\BRIDGES\01 OVER WASHINGTON STREET\Structure 1901848\1901848_S_BR_IND01.dwg Dylan Piercefield Plot: 2/24/2020 5:29 AM Save: 2/17/2020 11:19 AM

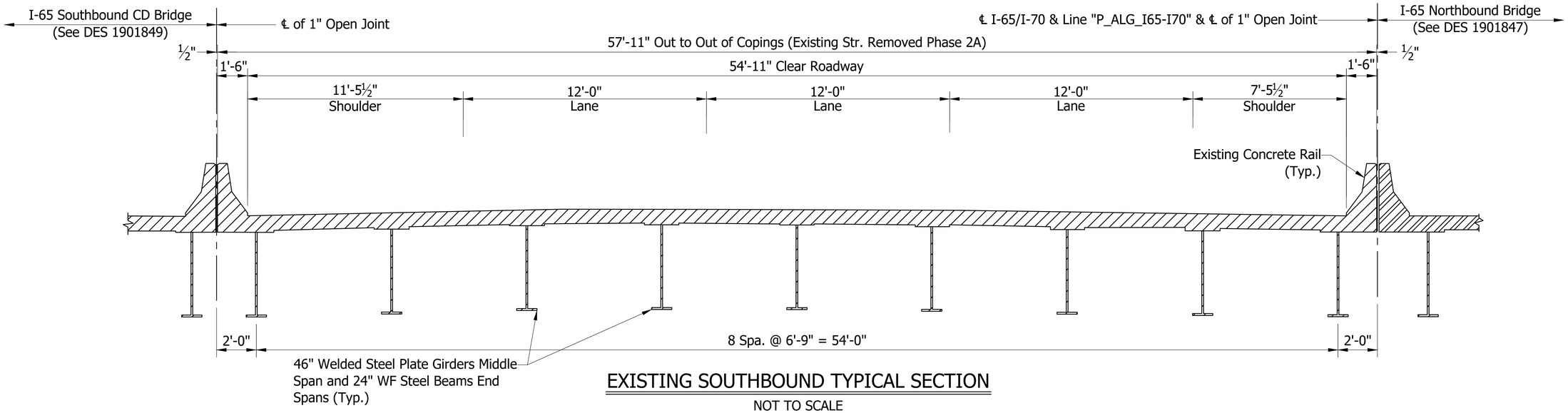

EXISTING SOUTHBOUND TYPICAL SECTION

NOT TO SCALE

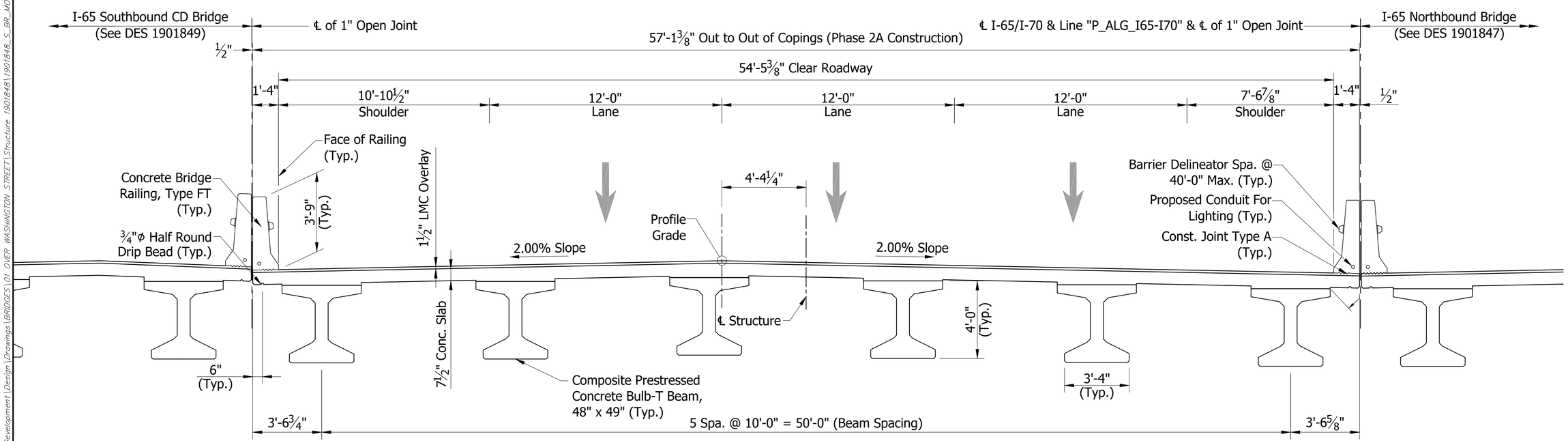

TYPICAL SECTION

Scale: 3/8"= 1'-0"

RECOMMENDED FOR APPROVAL: DESIGN ENGINEER DATE	INDIANA DEPARTMENT OF TRANSPORTATION	HORIZONTAL SCALE: As Noted	BRIDGE FILE: I65-111-10602 SBL
		VERTICAL SCALE: N/A	DESIGNATION: 1901848
DESIGNED: B. WRIGHT DRAWN: K. COFFMAN	MAINTENANCE OF TRAFFIC	SURVEY BOOK: ELECTRONIC	SHEET: 3 OF 14
CHECKED: M. EICHENAUER CHECKED: B. WRIGHT		CONTRACT: B-36910	PROJECT: 1600808

BFS NO. 6412

\\bfsn1241\Jobs5\641200.0000\ProjDevelopment\Design\Drawings\BRIDGES\01 OVER WASHINGTON STREET\Structure 1901848\1901848_S_BR_MOT01.dwg Dylan Piercefield Plot:2/24/2020 5:29 AM Save:2/17/2020 9:57 AM

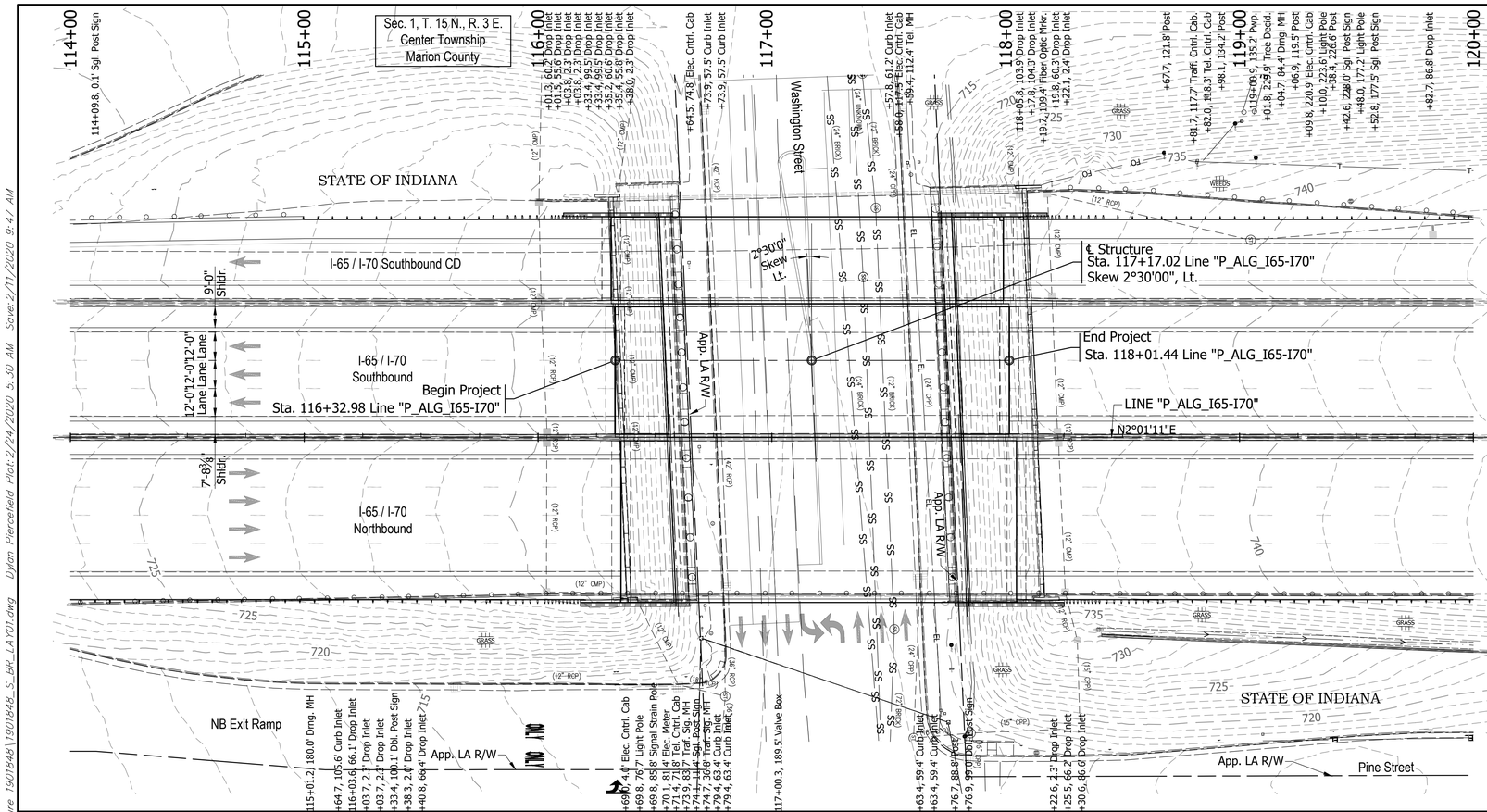

EXISTING STRUCTURE

The existing structure was built in 1974. Structure was rehabilitated in 2003. The structure is a 3-span continuous composite bridge with 46" welded steel plate girders in the middle span and 24" WF steel beams in the end spans.

Span lengths: 1 @ 27'-3", 1 @ 111'-6", 1 @ 38'-6"

Clear roadway 54'-11". Total length of 179'-10¾"

Existing structure to be removed.

Existing plans are on file with the Indiana Department of Transportation under Bridge File No. I-65-112-5725.

EARTHWORK TABULATION

See Roadway Plans (DES #_____) for earthwork tabulation.

NOTE: ALL TOPOGRAPHY INFORMATION REFERENCED TO LINE "P_ALG_I65-I70" UNLESS NOTED.

ALL R/W ON THIS SHEET DESCRIBED FROM LINE "P_ALG_I65-I70" UNLESS OTHERWISE NOTED

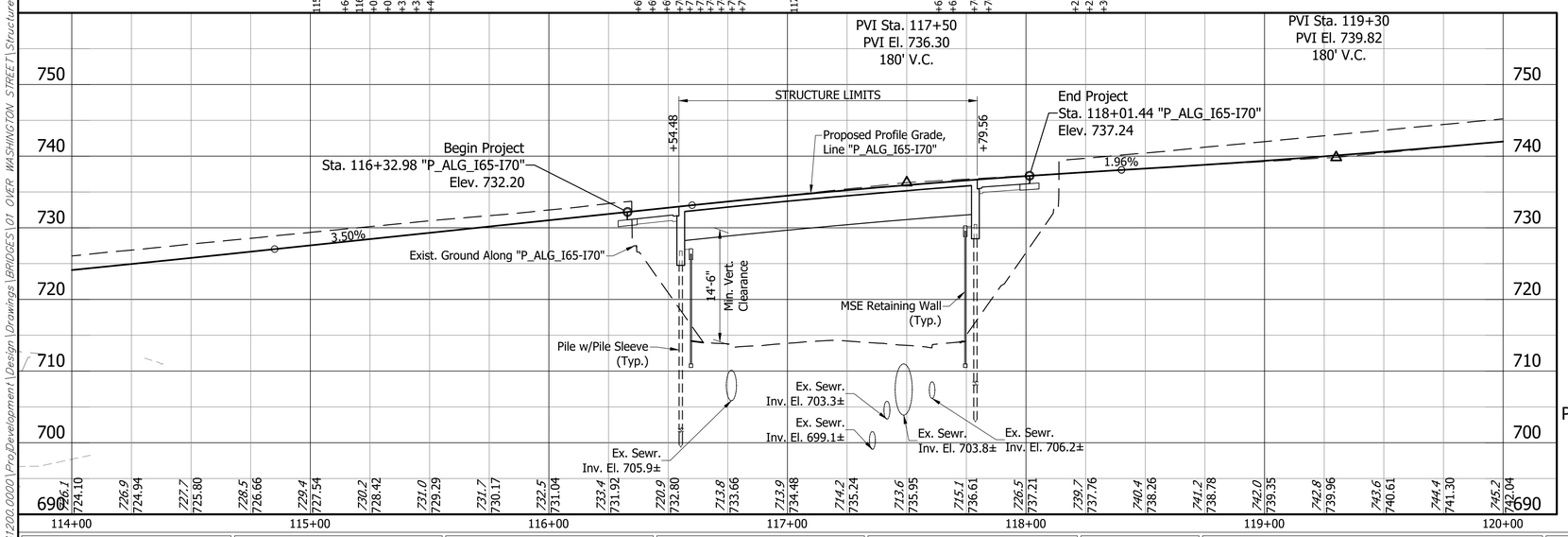

Notes:

1. For R/W and property information, see Location Control Route Survey (DES # _____).
2. For alignment data, see Geometric Layout Sheets (DES #_____).
3. See Road Plans (DES #_____) for Horizontal & Vertical Control Data.

PRESTRESSED COMPOSITE CONCRETE BULB-TEE BEAM BRIDGE
1 SPAN: 123'-6"
54'-5 3/8" CLEAR ROADWAY; SKEW 02°30'00" LT.
I-65 / I-70 S.B. OVER WASHINGTON STREET
MARION COUNTY

RECOMMENDED FOR APPROVAL: _____ DESIGN ENGINEER _____ DATE

DESIGNED: B. WRIGHT DRAWN: L. KIRSCH
CHECKED: V. SATHIRAJU CHECKED: B. WRIGHT

INDIANA
DEPARTMENT OF TRANSPORTATION

LAYOUT

HORIZONTAL SCALE	BRIDGE FILE
1" = 30'	I65-111-10602 SBL
VERTICAL SCALE	DESIGNATION
1" = 10'	1901848
SURVEY BOOK	SHEET
ELECTRONIC	4 OF 14
CONTRACT	PROJECT
B-36910	1600808

BFS NO. 6412

\\bfsnt241\Jobs5\641200.0000\ProDevelopment\Design\Drawings\BRIDGES\01 OVER WASHINGTON STREET\Structure 1901848\1901848_S_BR_LAY01.dwg Dylan Piercefield Plot:2/24/2020 5:30 AM Save:2/11/2020 9:47 AM

STRUCTURE TO BE BUILT ON A 180' VERTICAL CURVE

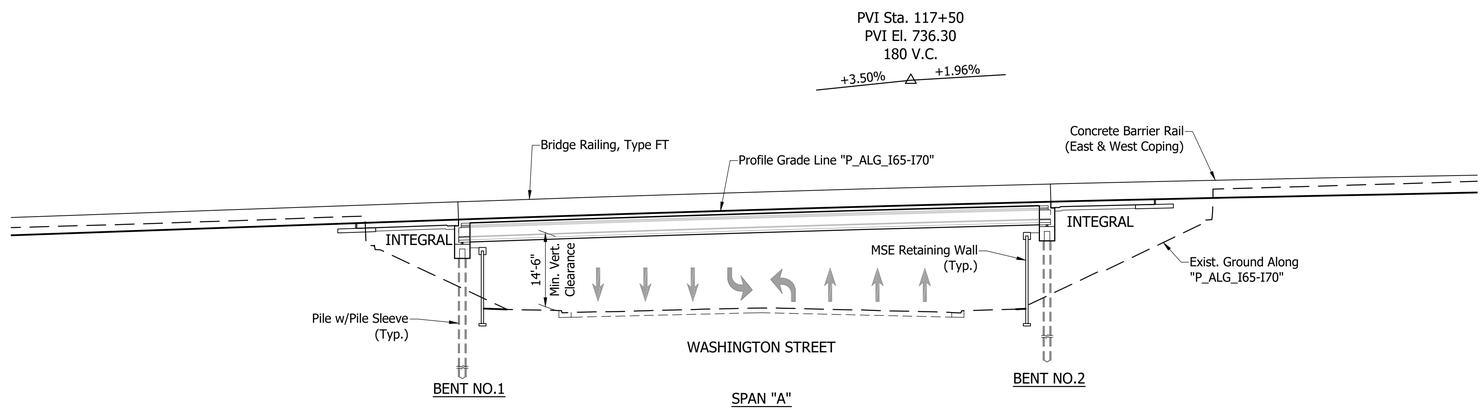

ELEVATION

Scale: 1/16" = 1'-0"

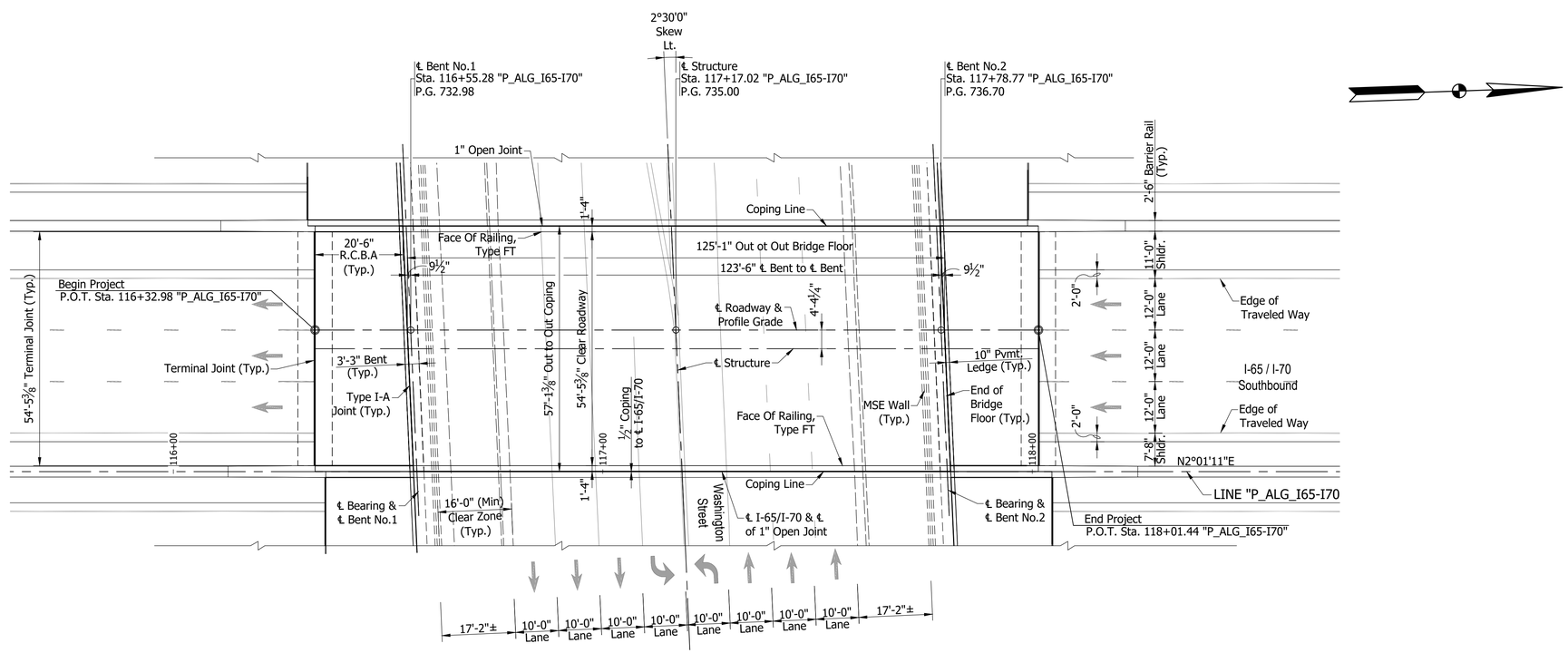

PLAN

Scale: 1/16" = 1'-0"

NOTE:
See Sheet 6 For Typical Section

PRESTRESSED COMPOSITE CONCRETE BULB-TEE BEAM BRIDGE
1 SPAN: 123'-6"
54'-5 3/8" CLEAR ROADWAY; SKEW 02°30'00" LT.
I-65 / I-70 S.B. OVER WASHINGTON STREET
MARION COUNTY

RECOMMENDED FOR APPROVAL: _____ DESIGN ENGINEER _____ DATE	INDIANA DEPARTMENT OF TRANSPORTATION	HORIZONTAL SCALE: As Noted	BRIDGE FILE: I65-111-10602 SBL
		VERTICAL SCALE: N/A	DESIGNATION: 1901848
DESIGNED: B. WRIGHT DRAWN: L. KIRSCH	GENERAL PLAN - PLAN & ELEVATION VIEWS	SURVEY BOOK: ELECTRONIC	SHEET: 5 OF 14
CHECKED: V. SATHIRAJU CHECKED: B. WRIGHT		CONTRACT: B-36910	PROJECT: 1600808

6412

BFS NO.

\\bfsn1241\Jobs5\641200.0000\ProDevelopment\Design\Drawings\BRIDGES\01 OVER WASHINGTON STREET\Structure 1901848\1901848_S-BR_PLN01.dwg Dylan Piercefield Plot:2/24/2020 5:30 AM Save:2/20/2020 4:32 PM

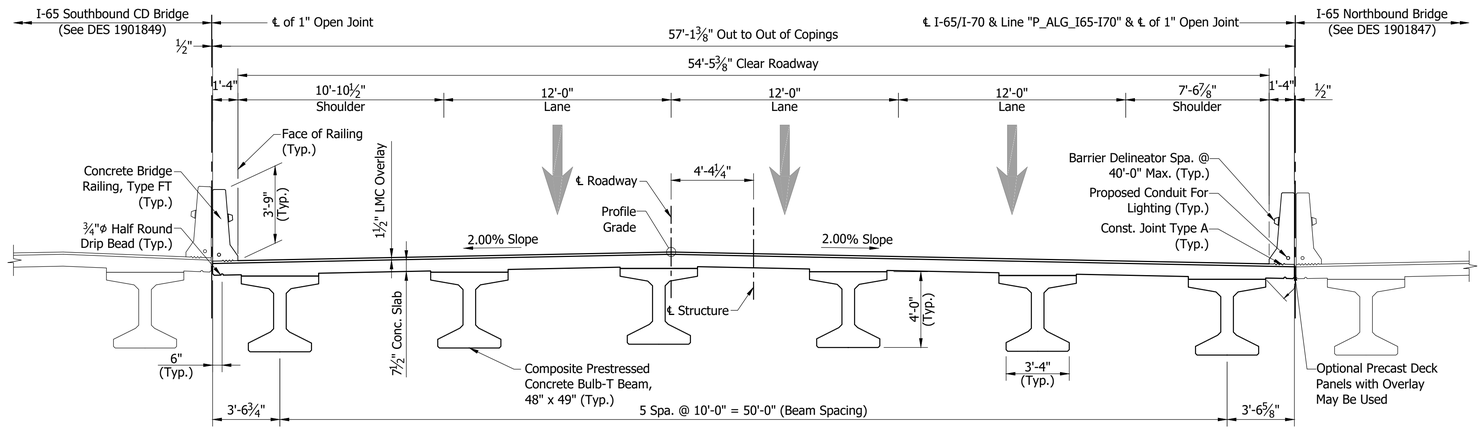

TYPICAL SECTION

Scale: 1/4"= 1'-0"

GENERAL NOTES

The existing structure shall be removed.

Reinforcing bars covering shall be 3 ½" in top and 1" min. in bottom of floor slabs and 3" in footings except bottom steel which shall be 4", and 2" in all other parts, unless noted.

Concrete in floor slab, and diaphragms, barriers, and end bents shall be an alternate Class C in accordance with the Technical Provisions.

Reinforcing Bars in Deck, Barrier, and End Bent Diaphragm Extending into the Deck shall be Stainless Steel. Reinforcing Bars in End Bent Diaphragm not Extending into the Deck and in the Cap shall be Epoxy Coated.

All exposed faces of the MSE walls and reinforced concrete bridge approach slabs shall receive surface seal.

See Bridge Aesthetic Plan for Architectural Details.

DESIGN DATA

LIVE LOAD:

Superstructure and Substructure Designed for HL-93 loading in accordance with the AASHTO LRFD Bridge Design Specifications, 8th Edition, 2017 and its subsequent revisions.

DEAD LOAD:

Designed for Actual Dead Load plus 35 psf of future wearing surface, and 15 psf for SIP Metal Deck Forms.

FLOOR SLAB:

Slab designed with a 7 ½" structural depth and a 1 ½" very early strength LMC wearing surface.

DESIGN STRESSES

CONSTRUCTION LOADING:

The exterior girder has been checked for strength, deflection, and overturning using the construction loads shown below. Cantilever overhang brackets were assumed for support of the deck overhang past the edge of the exterior beam. The finishing machine was assumed to be supported 6 in. outside the vertical coping form. The top overhang brackets were assumed to be located 6 in. past the edge of the vertical coping form. The bottom overhang brackets were assumed to be braced against the intersection of the girder bottom flange and web.

DECK FALSEWORK LOADS:

Designed for 15 psf for permanent metal stay-in-place deck forms, removable deck forms, and 2 ft. exterior walkway.

CONSTRUCTION LIVE LOAD:

Designed for 20 psf extending 2 ft. past the edge of coping and 75 lb/ft vertical force applied at a distance of 6 in. outside the face of coping over a 30 foot length of the deck centered with the finishing machine.

FINISHING-MACHINE LOAD:

4500 lb distributed over 10 ft. along the coping.

WIND LOAD:

Designed for 70 mph horizontal wind load in accordance with LRFD 3.8.1.

ULTIMATE DESIGN STRENGTHS:

Class "A" Concrete	f'c = 3,500 p.s.i.
Class "B" Concrete	f'c = 3,000 p.s.i.
Class "C" Concrete	f'c = 4,000 p.s.i.
Reinforcing Steel (Grade 60)	Fy = 60,000 p.s.i. (barrier)
	Fy = 75,000 p.s.i. (deck)
	Fy = 75,000 p.s.i. (all other locations)

SEISMIC DESIGN DATA:

Seismic Site Class	C
PGA (g)	0.051
S_s (g)	0.12
S_1 (g)	0.051
S_{D1} (g)	0.086
Seismic Design Category	A

PRESTRESSED COMPOSITE CONCRETE BULB-TEE BEAM BRIDGE
1 SPAN: 123'-6"
54'-5 3/8" CLEAR ROADWAY; SKEW 02°30'00" LT.
I-65 / I-70 S.B. OVER WASHINGTON STREET
MARION COUNTY

RECOMMENDED FOR APPROVAL: _____ DESIGN ENGINEER _____ DATE

DESIGNED: V. SATHIRAJU DRAWN: L. KIRSCH
CHECKED: B. WRIGHT CHECKED: M. MATEL

INDIANA
DEPARTMENT OF TRANSPORTATION

GENERAL PLAN - TYPICAL SECTION

HORIZONTAL SCALE	BRIDGE FILE
As Noted	I65-111-10602 SBL
VERTICAL SCALE	DESIGNATION
N/A	1901848
SURVEY BOOK	SHEET
ELECTRONIC	6 OF 14
CONTRACT	PROJECT
B-36910	1600808

BFS NO. 6412

\\bfsn1241\jobs5\641200.0000\ProjDevelopment\Design\Drawings\BRIDGES\01 OVER WASHINGTON STREET\Structure 1901848\1901848_S_BR_PLN02.dwg Dylan Piercefield Plot:2/24/2020 5:30 AM Save:2/20/2020 10:10 AM

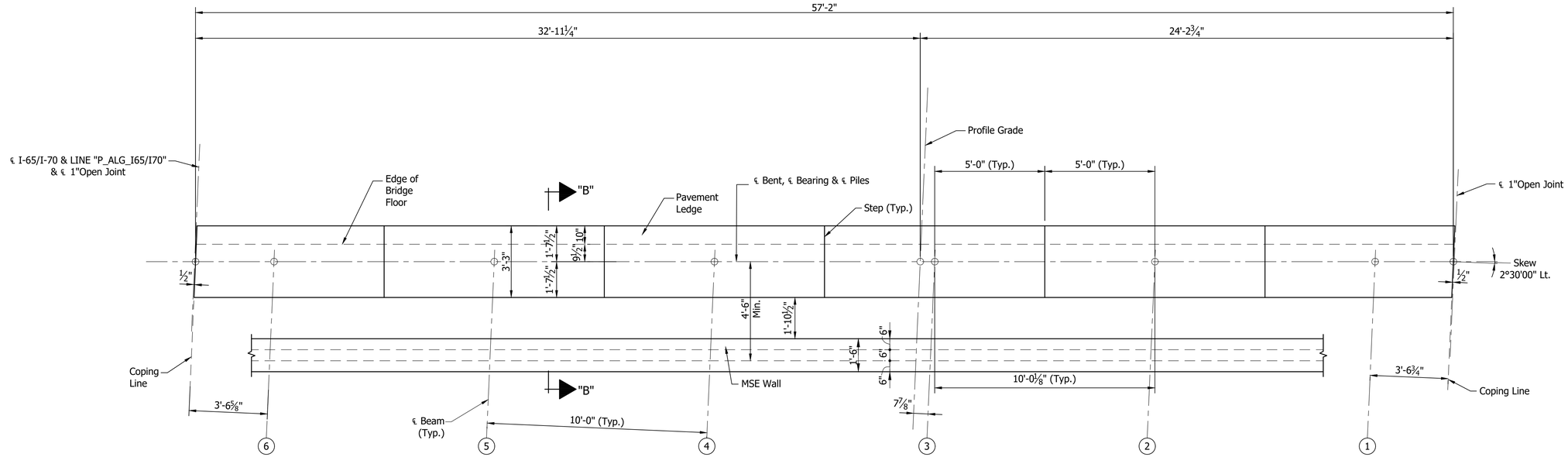

PLAN
BENT NO.1 SB (SHOWN)
BENT NO.2 SB (SIMILAR)
Scale: ⅜"=1'-0"

SEAT ELEVATIONS						
Beam No.	6	5	4	3	2	1
Bent No.1	726.95	727.13	727.32	727.47	727.26	727.04
Bent No.2	730.65	730.84	731.03	731.20	730.98	730.77

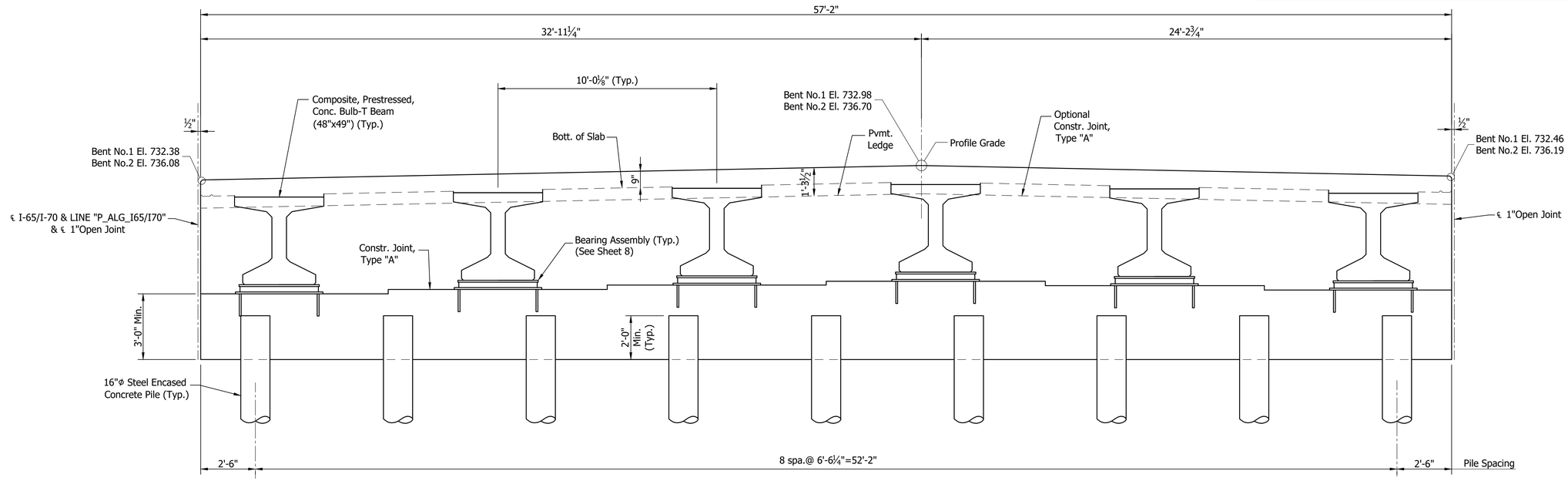

SECTION ALONG ℄ BENT
Scale: ⅜"=1'-0"

RECOMMENDED FOR APPROVAL: _____ DESIGN ENGINEER DATE

DESIGNED: V. SATHIRAJU DRAWN: D. SHEETZ
CHECKED: B. WRIGHT CHECKED: B. WRIGHT

INDIANA
DEPARTMENT OF TRANSPORTATION

BENTS NO. 1 AND NO. 2 DETAILS

HORIZONTAL SCALE	BRIDGE FILE
As Noted	I65-111-10602 SBL
VERTICAL SCALE	DESIGNATION
N/A	1901848
SURVEY BOOK	SHEET
ELECTRONIC	7 OF 14
CONTRACT	PROJECT
B-36910	1600808

BFS NO. 6412

\\bfsnt241\jobs5\641200.0000\ProjDevelopment\Design\Drawings\BRIDGES\01 OVER WASHINGTON STREET\Structure 1901848\1901848_S_BR_BNT01.dwg Dylan Piercefield Plot:2/24/2020 5:30 AM Save:1/21/2020 8:28 AM

⊛ As an alternate a ⅞"ϕx1'-3" Long Headed Automatic Welded Stud may be used.

⊗ Setting Tolerance of Bottom Plate-Level with to not more than 1/16" below top of Concrete.

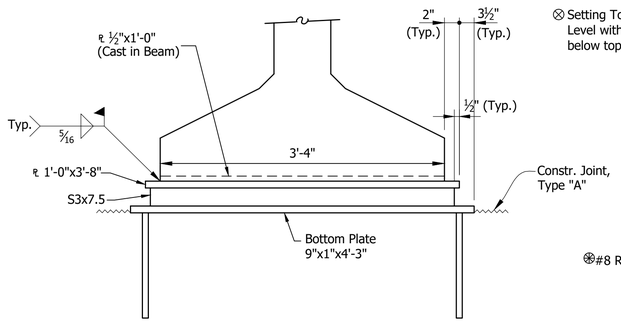

ELEVATION

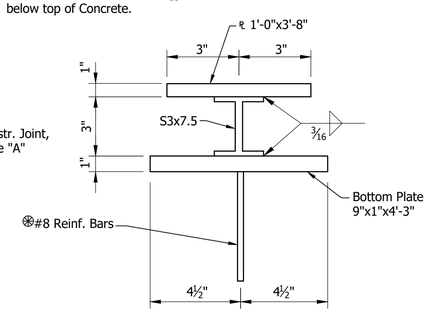

SECTION

BEARING ASSEMBLY

Not to Scale

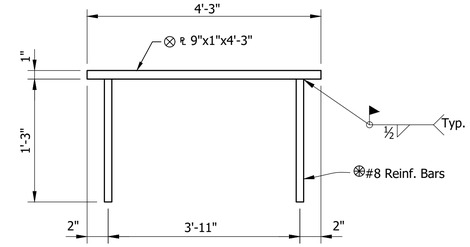

BOTTOM PLATE DETAIL

Not to Scale

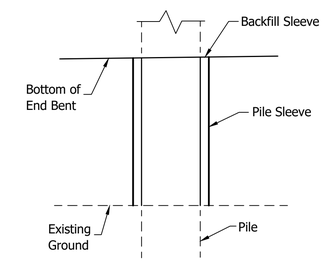

PILE SLEEVE DETAIL

Not to Scale

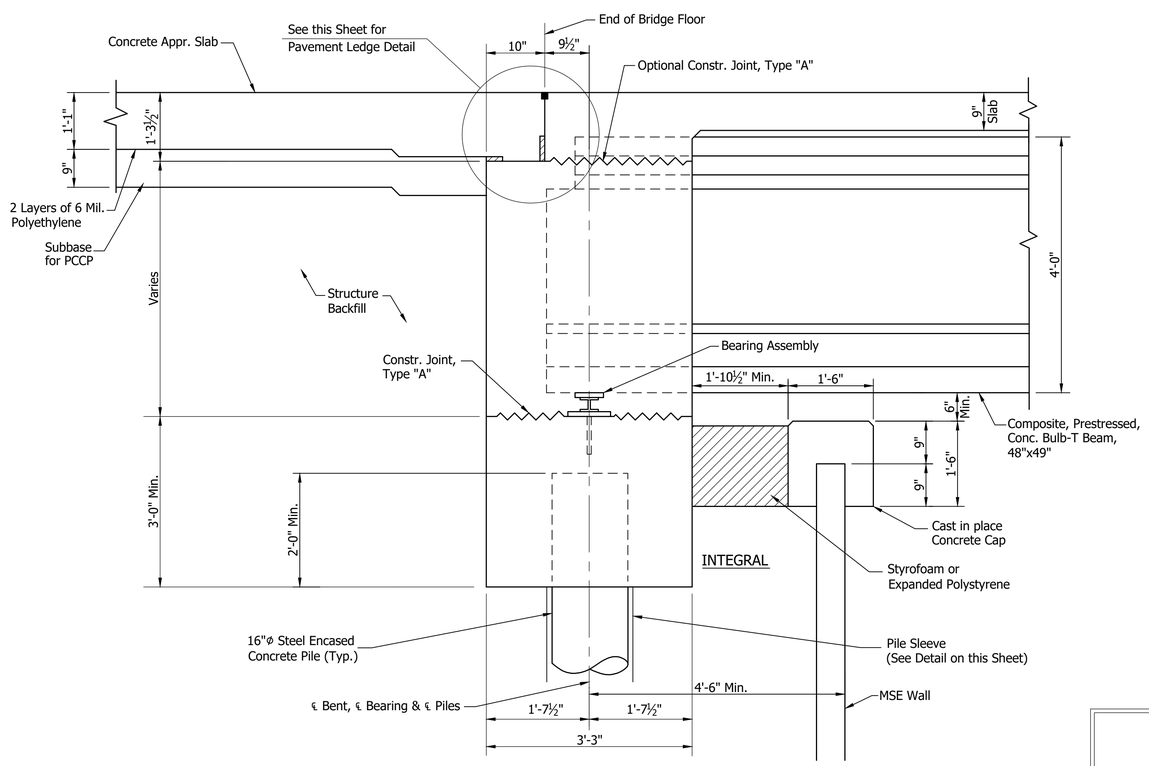

SECTION "B-B"

Not to Scale

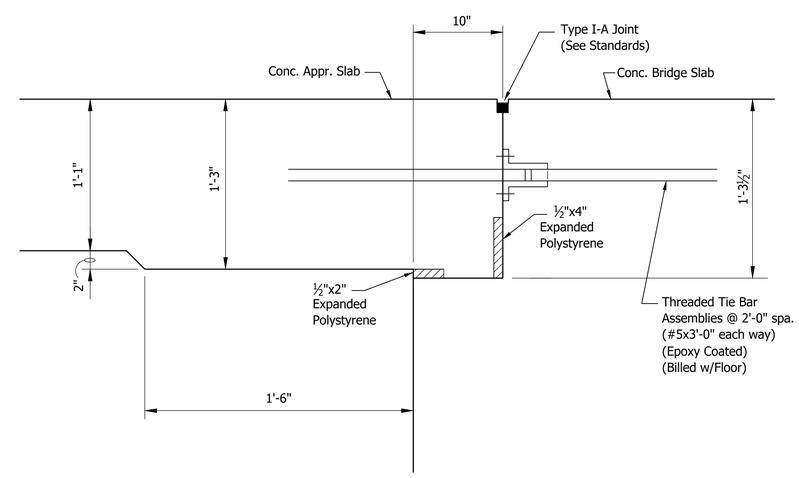

PAVEMENT LEDGE DETAIL

Not to Scale

RECOMMENDED FOR APPROVAL: DESIGN ENGINEER DATE	INDIANA DEPARTMENT OF TRANSPORTATION	HORIZONTAL SCALE: As Noted	BRIDGE FILE: I65-111-10602 SBL
		VERTICAL SCALE: N/A	DESIGNATION: 1901848
DESIGNED: V. SATHIRAJU DRAWN: D. SHEETZ	BENT DETAILS	SURVEY BOOK	SHEET
CHECKED: B. WRIGHT CHECKED: B. WRIGHT		ELECTRONIC	8 OF 14
		CONTRACT: B-36910	PROJECT: 1600808

BFS NO. 6412

\\bfsn1241\jobs5\641200.0000\Proj.Development\Design\Drawings\BRIDGES\01 OVER WASHINGTON STREET\Structure 1901848\1901848_S_BR_BWT02.dwg Dylan Piercefield Plot:2/24/2020 5:30 AM Save:2/17/2020 10:46 AM

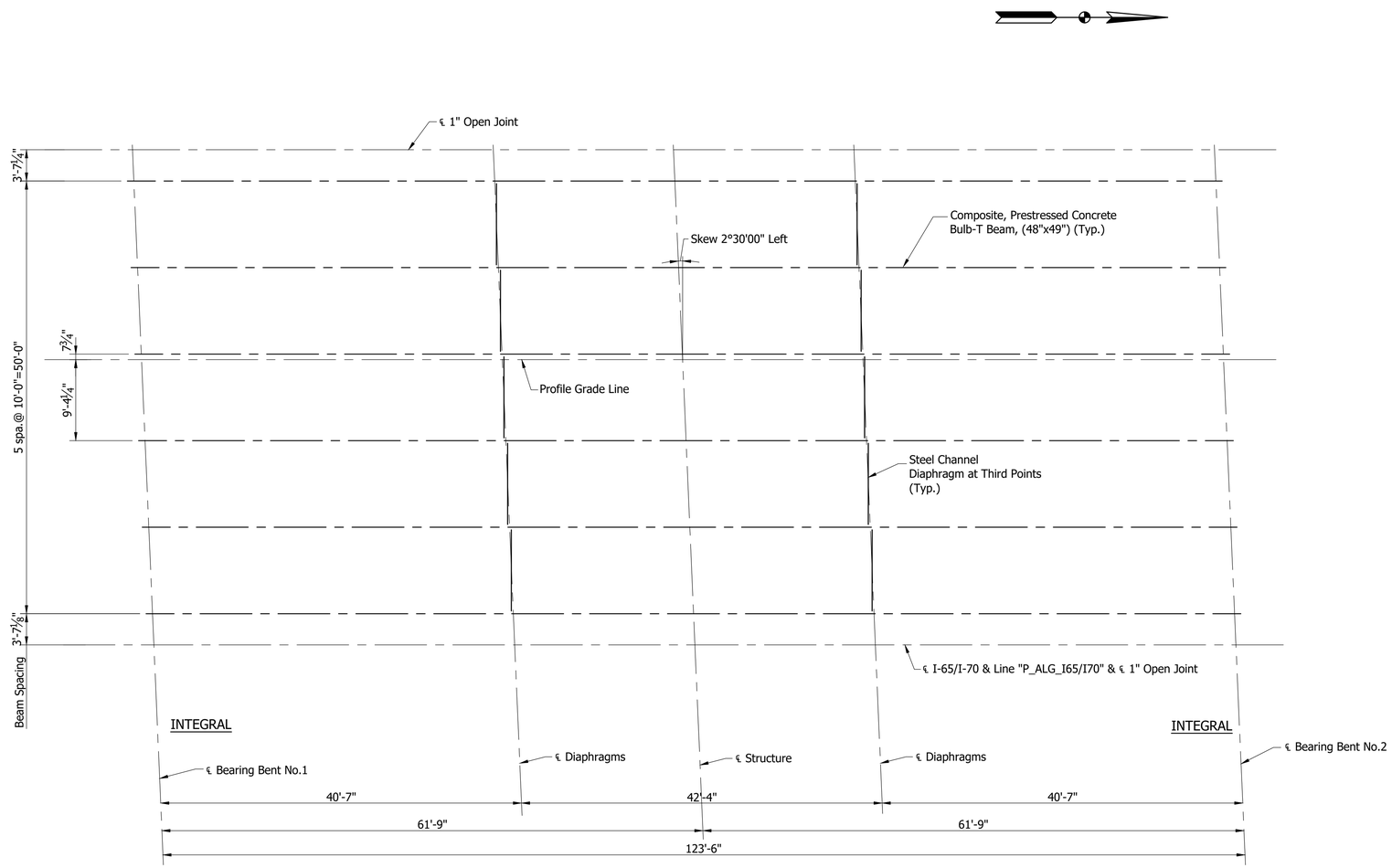

BEAM ERECTION PLAN

Scale: 1/8" = 1'-0"

RECOMMENDED FOR APPROVAL: _____ DESIGN ENGINEER DATE	INDIANA DEPARTMENT OF TRANSPORTATION	HORIZONTAL SCALE: As Noted	VERTICAL SCALE: N/A	BRIDGE FILE: I65-111-10602 SBL; DESIGNATION: 1901848
DESIGNED: V. SATHIRAJU DRAWN: D. SHEETZ CHECKED: B. WRIGHT CHECKED: B. WRIGHT	FRAMING PLAN	SURVEY BOOK: ELECTRONIC	SHEET: 9 OF 14	PROJECT: 1600808
		CONTRACT: B-36910		

6412

BFS NO.

\\bfsnt241\jobs5\641200.0000\ProjDevelopment\Design\Drawings\BRIDGES\01 OVER WASHINGTON STREET\Structure 1901848\1901848_S_BR_FRM01.dwg Dylan Piercefield Plot-2/24/2020 5:30 AM Save:12/23/2019 9:22 AM

Notes:
Connect Angles to Beams with
⅞"ø H.S. Bolt with Hardened Washer, (ASTM F436)
Connect Channel to Angles with ⅞"ø H.S. Bolt
with Lock Nut, one Hardened Washer and
2 Washers 3"x5/16"x0'-3" (ASTM F436)

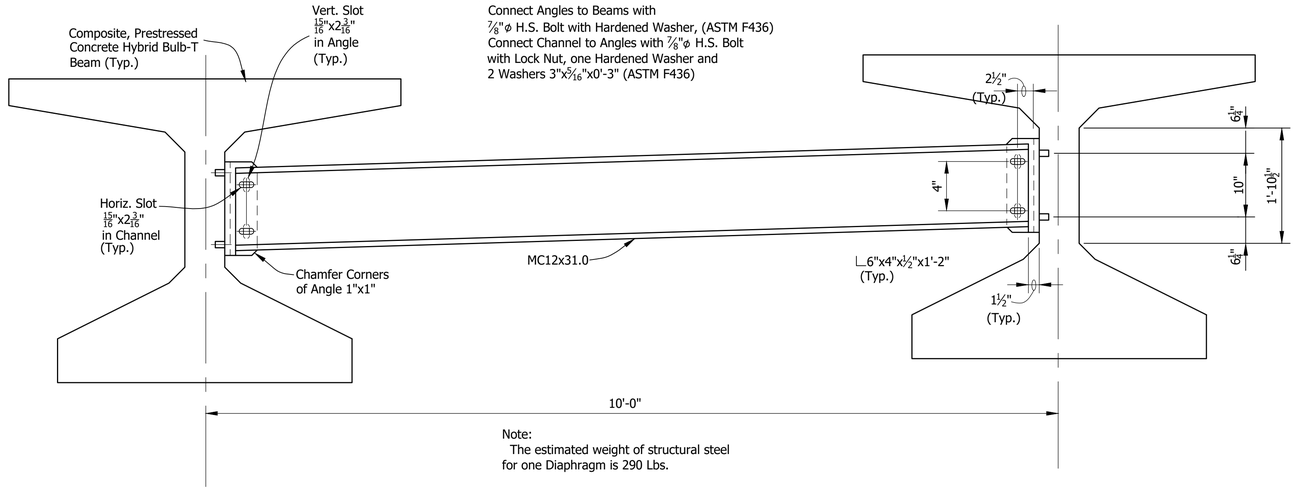

Note:
The estimated weight of structural steel for one Diaphragm is 290 Lbs.

ELEVATION
Not to Scale

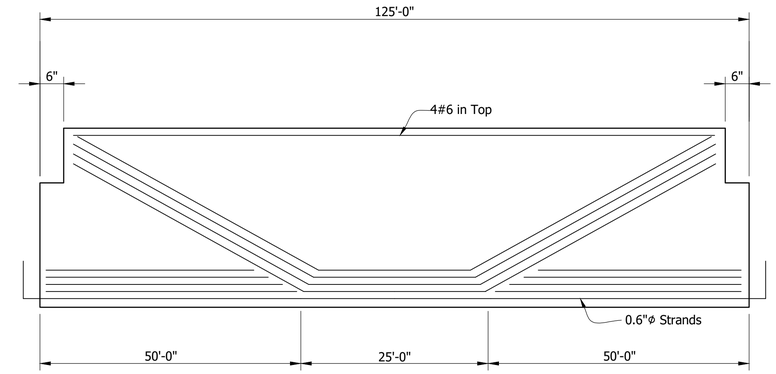

BEAM ELEVATION
SPAN "A"
SHOWING DRAPED STRANDS
Not to Scale

✳ Denotes Epoxy Coated

Note:
Bars 1" Clear unless noted.

1. Surface Seal req'd on top of all Beams and Exterior Face of Exterior Beams
2. 1"ø Holes or ¾"ø Inserts for Dowels at Bent or Pier. (See Beam Plans)
3. ℞ ½"x12"x3'-2½" at End Bent Ends only

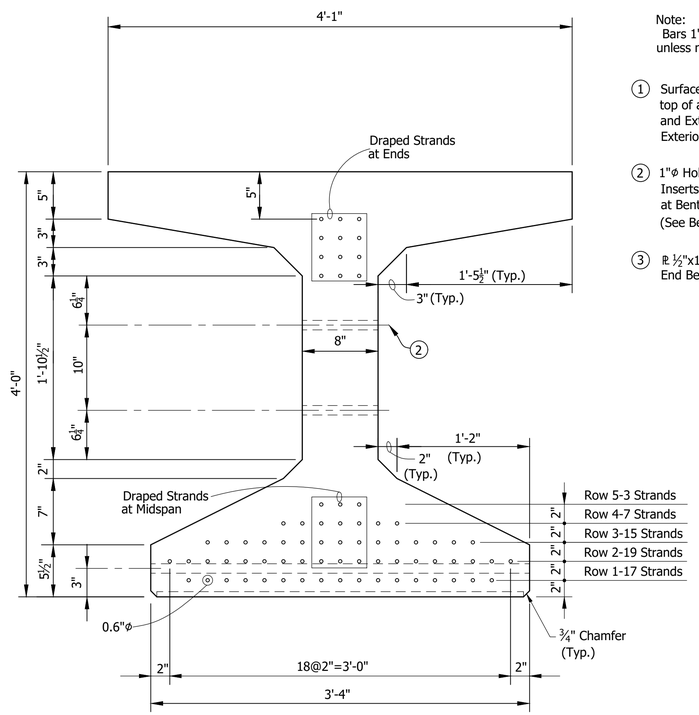

SECTION SHOWING STRANDS

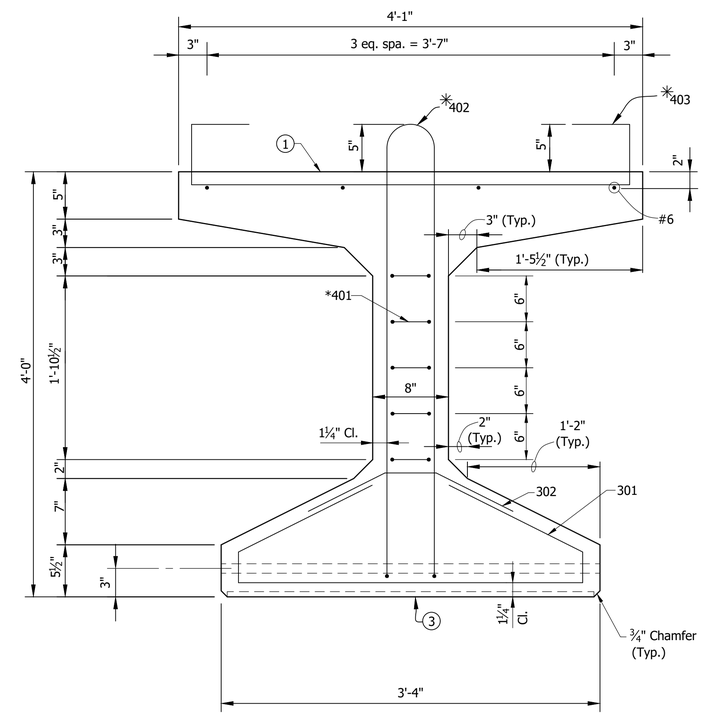

SECTION SHOWING REINFORCING

BEAM SECTIONS
Not to Scale

RECOMMENDED FOR APPROVAL: DESIGN ENGINEER DATE	INDIANA DEPARTMENT OF TRANSPORTATION	HORIZONTAL SCALE: As Noted	BRIDGE FILE: I65-111-10602 SBL
		VERTICAL SCALE: N/A	DESIGNATION: 1901848
DESIGNED: V. SATHIRAJU DRAWN: J. BIER	BEAM DETAILS	SURVEY BOOK: ELECTRONIC	SHEET: 10 OF 14
CHECKED: B. WRIGHT CHECKED: B. WRIGHT		CONTRACT: B-36910	PROJECT: 1600808

BFS NO. 6412

\\bfsn1241\jobs5\641200.0000\Proj\Development\Design\Drawings\BRIDGES\01 OVER WASHINGTON STREET\Structure 1901848\1901848_S_BR_BMD01.dwg Dylan Piercefield Plot:2/24/2020 5:30 AM Save:12/11/2019 9:56 AM

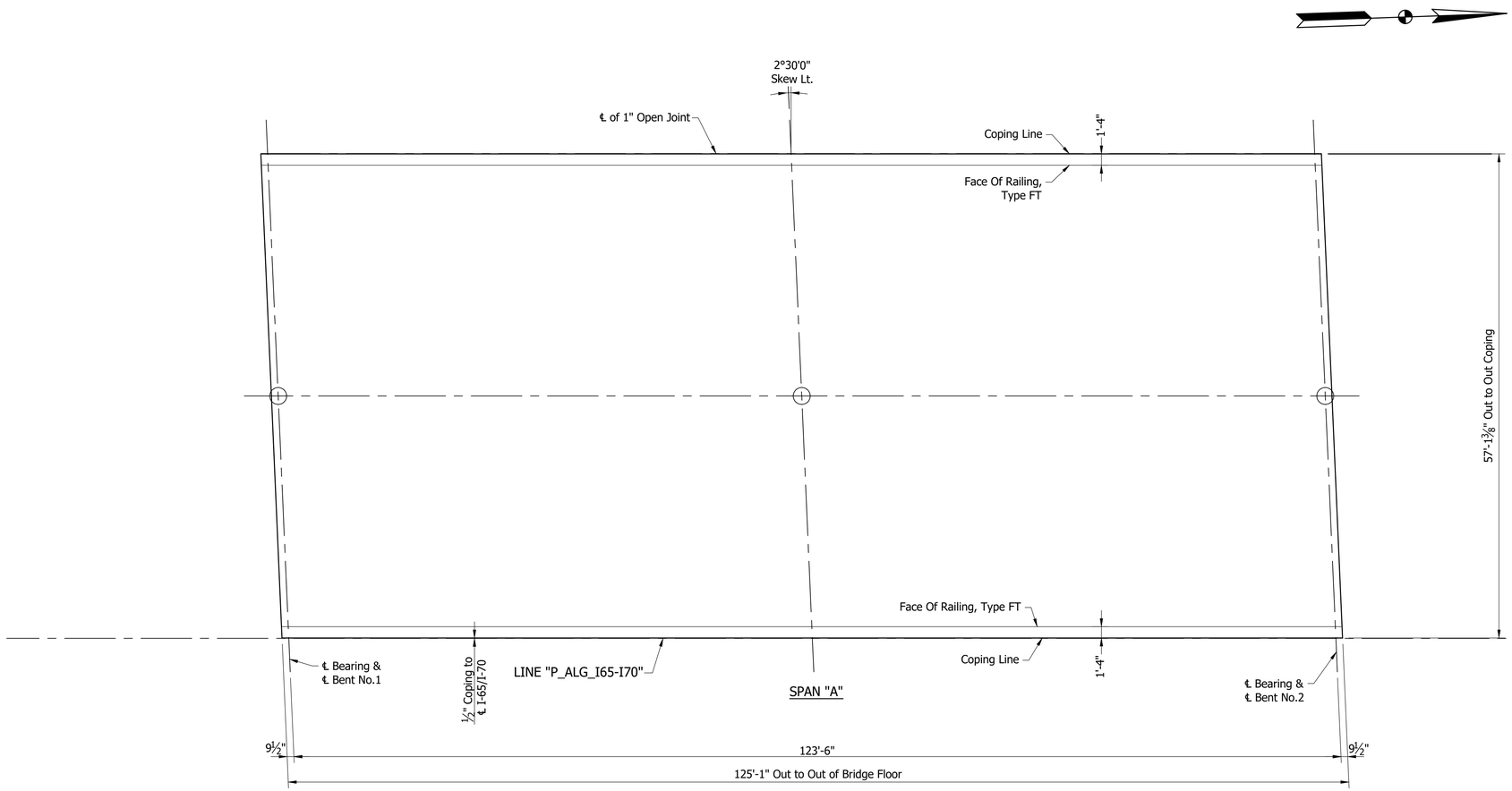

FLOOR PLAN

Scale: 1/8" = 1'-0"

NOTE:
See Sheet ____ For _____

RECOMMENDED FOR APPROVAL: _____ DESIGN ENGINEER _____ DATE	INDIANA DEPARTMENT OF TRANSPORTATION	HORIZONTAL SCALE: As Noted	BRIDGE FILE: I65-111-10602 SBL
		VERTICAL SCALE: N/A	DESIGNATION: 1901848
DESIGNED: B. WRIGHT DRAWN: D. PIERCEFIELD	FLOOR DETAILS	SURVEY BOOK: ELECTRONIC	SHEET: 11 OF 14
CHECKED: M. EICHENAUER CHECKED: B. WRIGHT		CONTRACT: B-36910	PROJECT: 1600808

BFS NO. 6412

\\bfsn1241\jobs5\641200.0000\ProjDevelopment\Design\Drawings\BRIDGES\01 OVER WASHINGTON STREET\Structure 1901848\1901848_S_BR_FLR01.dwg Dylan Piercefield Plot:2/24/2020 5:31 AM Save:1/31/2020 6:05 AM

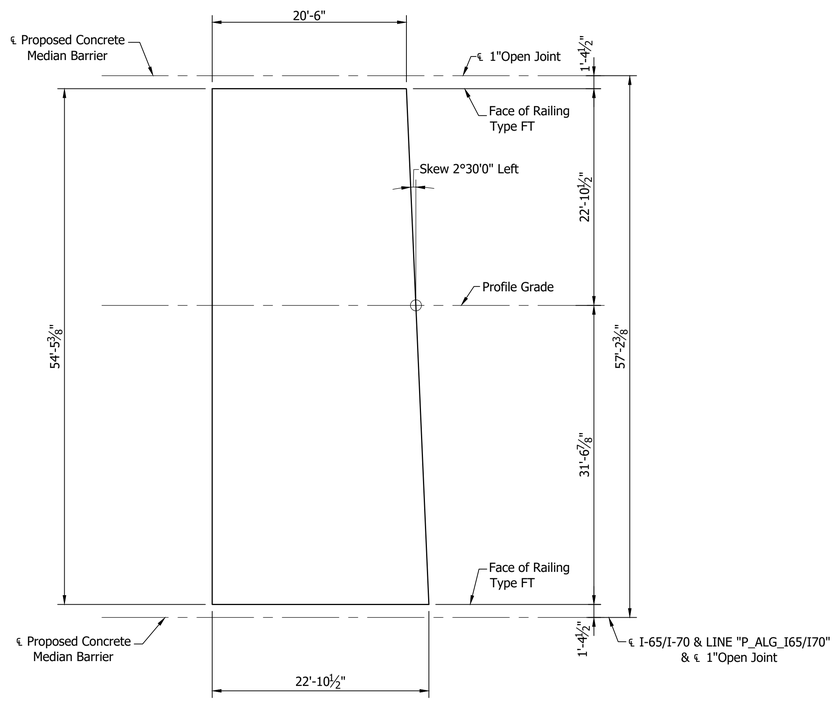

PLAN
SOUTH SLAB
Scale: ⅛"=1'-0"

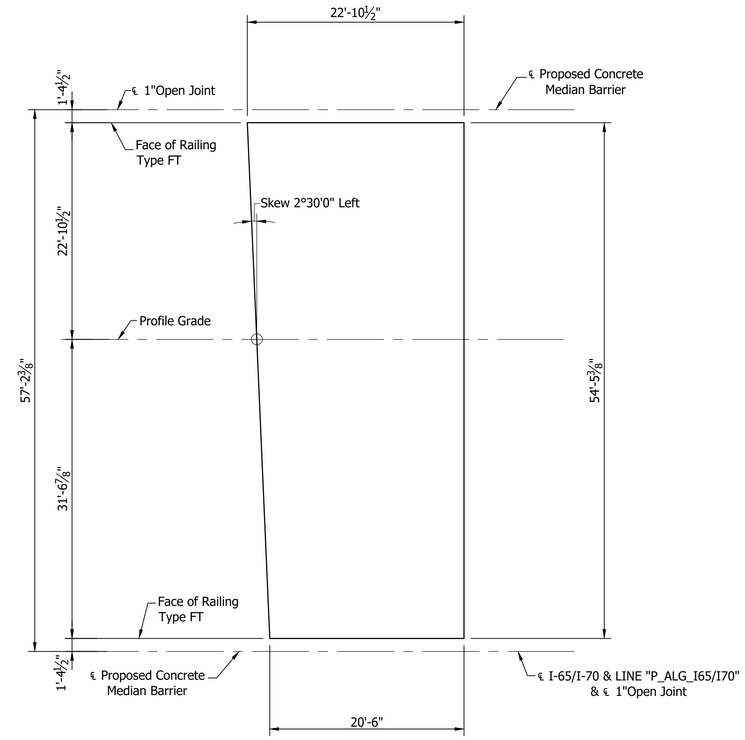

PLAN
NORTH SLAB
Scale: ⅛"=1'-0"

	RECOMMENDED FOR APPROVAL: DESIGN ENGINEER DATE	INDIANA DEPARTMENT OF TRANSPORTATION	HORIZONTAL SCALE: As Noted	BRIDGE FILE: I65-111-10602 SBL
			VERTICAL SCALE: N/A	DESIGNATION: 1901848
	DESIGNED: D. SHEETZ DRAWN: D. SHEETZ	APPROACH SLAB	SURVEY BOOK: ELECTRONIC	SHEET: 12 OF 14
	CHECKED: B. WRIGHT CHECKED: M. MATEL		CONTRACT: B-36910	PROJECT: 1600808

6412
BFS NO.

\\bfsnt241\job5\641200.0000\ProDevelopment\Design\Drawings\BRIDGES\01 OVER WASHINGTON STREET\Structure 1901848\1901848_S_BR_AP501.dwg Dylan Piercefield Plot:2/24/2020 5:31 AM Save:1/27/2020 10:27 AM

\\bfsn1241\jobs5\641200.0000\Proj\Development\Design\Drawings\BRIDGES\01 OVER WASHINGTON STREET\Structure 1901848\1901848_S_BR_WL01.dwg Dylan Piercefield Plot:2/24/2020 5:31 AM Save:2/20/2020 11:34 AM

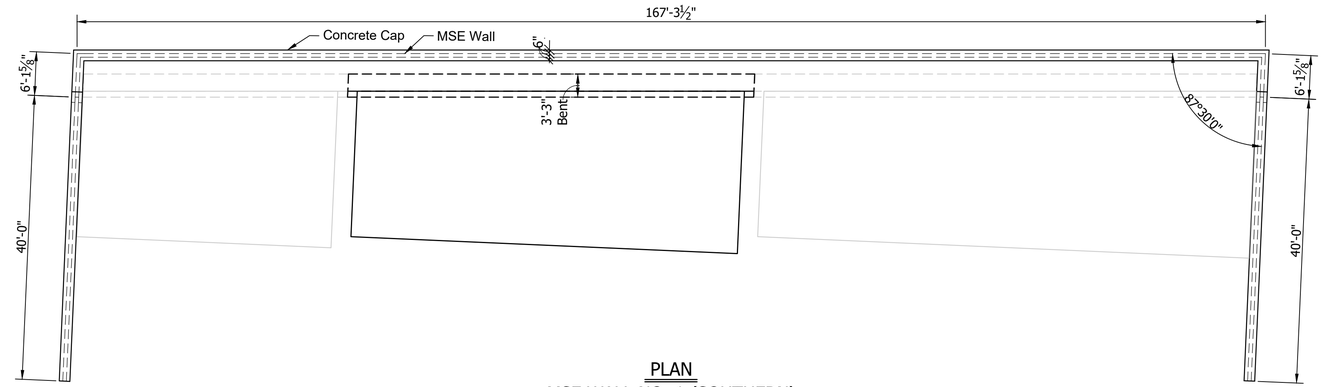

PLAN
MSE WALL NO. 1 (SOUTHERN)
Scale: 3/32"=1'-0"

NOTE:
Elevation Looking At Back Face of Wall

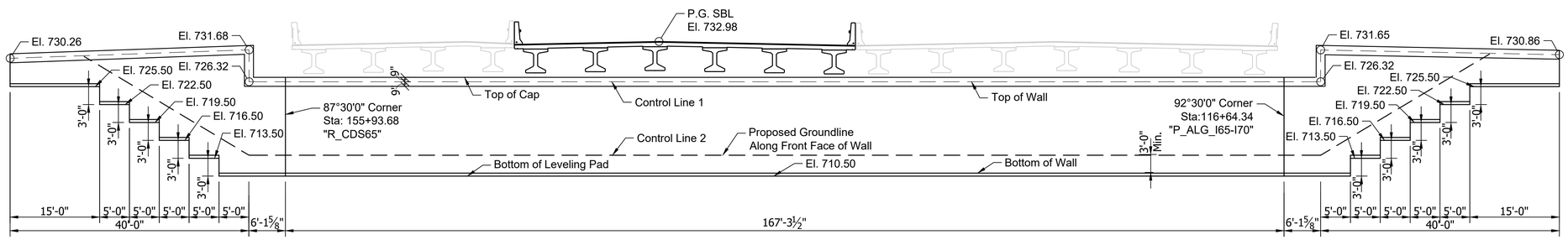

ELEVATION
MSE WALL NO. 1 (SOUTHERN)
Scale: 3/32"=1'-0"

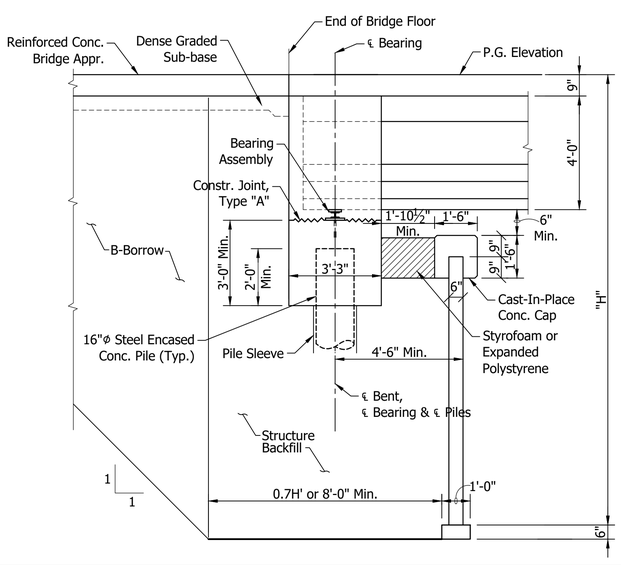

SECTION
MSE WALL NO. 1
Scale: 3/8"=1'-0"

RECOMMENDED FOR APPROVAL: DESIGN ENGINEER DATE	INDIANA DEPARTMENT OF TRANSPORTATION	HORIZONTAL SCALE: As Noted	BRIDGE FILE: 165-111-10602 SBL	
		VERTICAL SCALE: N/A	DESIGNATION: 1901848	
DESIGNED: B. WRIGHT DRAWN: D. PIERCEFIELD	WALL LAYOUT	SURVEY BOOK: ELECTRONIC	SHEET: 13 OF 14	6412
CHECKED: M. EICHENAUER CHECKED: B. WRIGHT		CONTRACT: B-36910	PROJECT: 1600808	BFS NO.

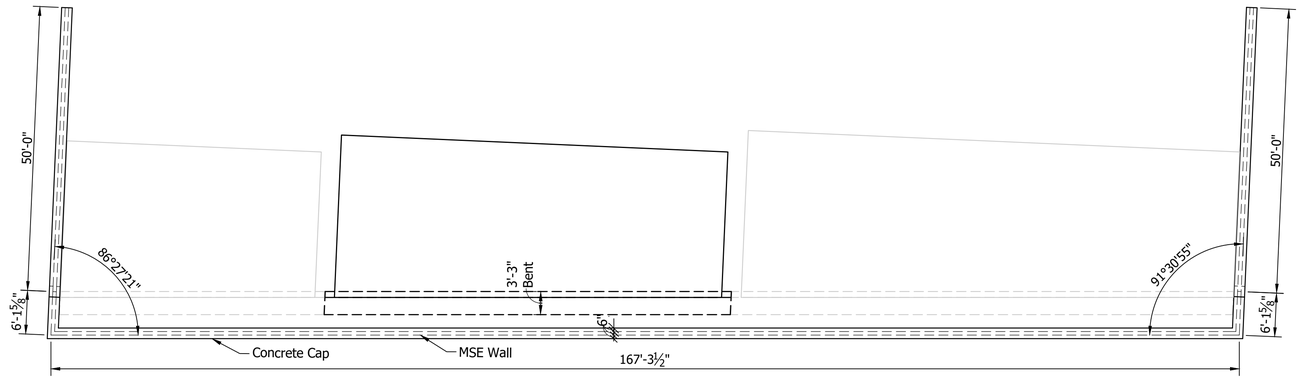

PLAN
MSE WALL NO. 2 (NORTHERN)
Scale: 3/32"=1'-0"

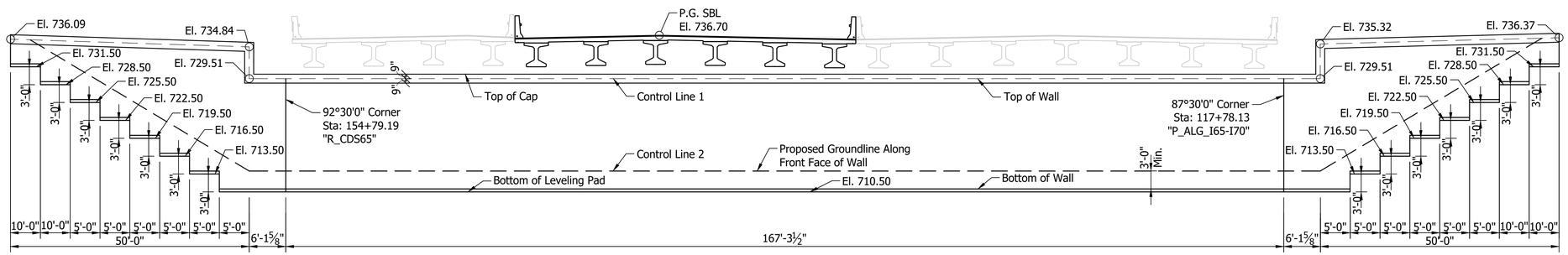

ELEVATION
MSE WALL NO. 2 (NORTHERN)
Scale: 3/32"=1'-0"

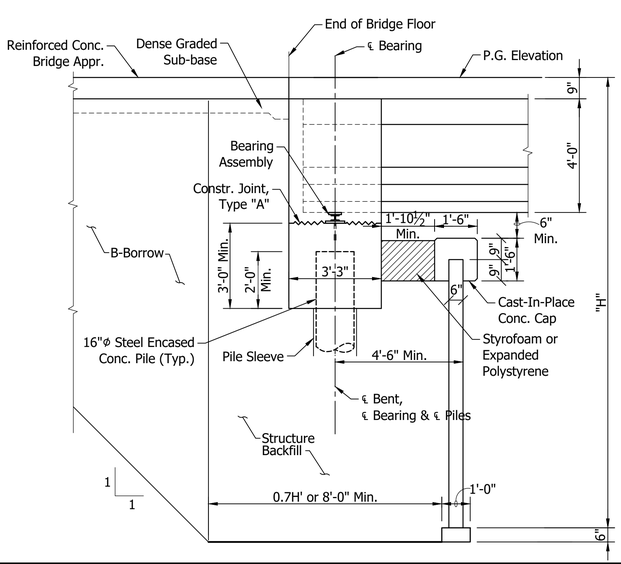

SECTION
MSE WALL NO. 2
Scale: 3/8"=1'-0"

RECOMMENDED FOR APPROVAL: DESIGN ENGINEER DATE	INDIANA DEPARTMENT OF TRANSPORTATION	HORIZONTAL SCALE: As Noted	BRIDGE FILE: I65-111-10602 SBL
		VERTICAL SCALE: N/A	DESIGNATION: 1901848
DESIGNED: B. WRIGHT DRAWN: D. PIERCEFIELD	WALL LAYOUT	SURVEY BOOK: ELECTRONIC	SHEET: 14 OF 14
CHECKED: M. EICHENAUER CHECKED: B. WRIGHT		CONTRACT: B-36910	PROJECT: 1600808

BFS NO. 6412

\\bfsn1241\jobs5\641200.0000\Proj\Development\Design\Drawings\BRIDGES\01 OVER WASHINGTON STREET\Structure 1901848\1901848_S_BR_WL02.dwg Dylan Piercefield Plot:2/24/2020 11:04 AM Save:2/20/2020 11:46 AM

PROJECT	DESIGNATION
1600808	1901849
CONTRACT	BRIDGE FILE
B-36910	I65-111-10603 CD

STRUCTURE INFORMATION				
STRUCTURE	TYPE	SPAN & SKEW	OVER	STATION
I65-111-10603 CD	PRESTRESSED COMPOSITE CONCRETE BULB-TEE BEAM BRIDGE	1 SPAN: 123'-6" SKEW 02°30'00" LT.	WASHINGTON STREET	155+27.91 LINE "R_CDS65"

INDIANA DEPARTMENT OF TRANSPORTATION

BRIDGE PLANS

FOR SPANS OVER 20 FEET

ROUTE: I-65 / I-70 S.B. CD AT: RP 112+22

PROJECT NO. 1600808 P.E.
1600808 CONST.

NO ADDITIONAL RIGHT OF WAY REQUIRED FOR THIS PROJECT

BRIDGE REPLACEMENT ON I-65 / I-70 S.B. CD OVER WASHINGTON STREET
LOCATED 0.92 MILES NORTH OF I-70 (SOUTH SPLIT) INTERCHANGE
SECTIONS 1 & 12, TOWNSHIP 15 NORTH, RANGE 3 EAST
CENTER TOWNSHIP, MARION COUNTY INDIANA

END PROJECT No. 1600808
STATION 25+75.00 LINE "P_ALG_I65"

END PROJECT No. 1600808
STATION 41+85.70 LINE "P_ALG_I70"

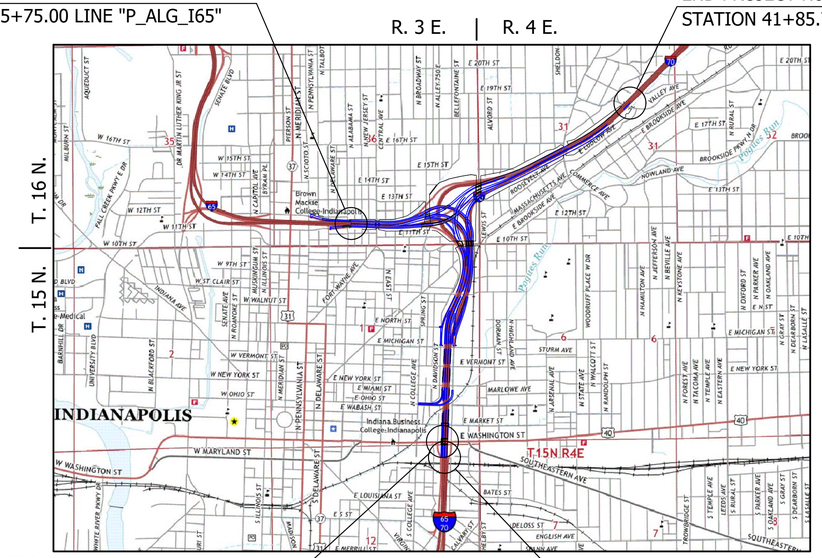

PROJECT LOCATION
BRIDGE FILE No. I65-111-10603 CD
I-65 / I-70 S.B. CD OVER WASHINGTON STREET
STA. 155+27.91 LINE "R_CDS65"

LOCATION MAP
MARION COUNTY

BEGIN PROJECT No. 1600808
STATION 113+00.00 LINE "P_ALG_I65/I70"

SCALE: 1" = 2000'

TRAFFIC DATA	I-65 / I-70 S.B. CD	WASHINGTON STREET
A.D.T. (2021)	11,569 V.P.D.	30,000 V.P.D.
A.D.T. (2041)	11,189 V.P.D.	40,451 V.P.D.
D.H.V. (2041)	1,127 V.P.H.	4,491 V.P.D.
DIRECTIONAL DISTRIBUTION	0 %	31 %
TRUCKS	8% D.H.V.	4% D.H.V.
DESIGN DATA		
DESIGN SPEED	55 M.P.H.	35 M.P.H.
PROJECT DESIGN CRITERIA	4R (FREEWAY)	N/A
FUNCTIONAL CLASSIFICATION	URBAN FREEWAY	PRINCIPAL ARTERIAL
RURAL/URBAN	URBAN (BUILT-UP)	URBAN (BUILT-UP)
TERRAIN	LEVEL	LEVEL
ACCESS CONTROL	FULL CONTROL	NONE

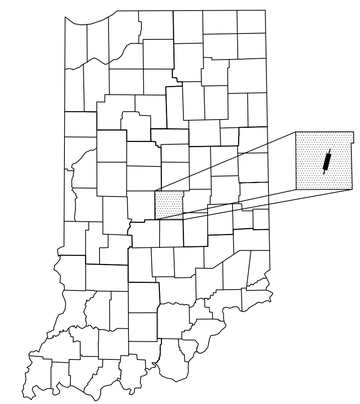

PROJECT LOCATION SHOWN BY

LATITUDE: 39°46'01" N LONGITUDE: 86°08'35" W

BRIDGE LENGTH :	0.024 MI.
ROADWAY LENGTH :	SEE ROAD PLANS
TOTAL LENGTH :	SEE ROAD PLANS
MAX GRADE :	-3.46%

HUC: 05120201130020

INDIANA DEPARTMENT OF TRANSPORTATION
STANDARD SPECIFICATIONS DATED 2020 TO
BE USED WITH THESE PLANS.

SUPERIOR CONSTRUCTION

PLANS PREPARED BY: Butler Fairman and Seufert Inc. (317)713-4615
PHONE

CERTIFIED BY: #/#/#
DATE

APPROVED FOR LETTING: #/#/#
INDIANA DEPARTMENT OF TRANSPORTATION DATE

BRIDGE FILE
I65-111-10603 CD
DESIGNATION
1901849

SURVEY BOOK	SHEET		
ELECTRONIC	1	OF	14
CONTRACT	PROJECT		
B-36910	1600808		

6412

\\bfsn1241\Jobs5\641200.0000\ProjDevelopment\Design\Drawings\BRIDGES\01 OVER WASHINGTON STREET\Structure 1901849\901849_S_BR_TTL01.dwg Dylan Piercefield Plot:2/24/2020 5:32 AM Save:2/21/2020 9:10 AM

UTILITIES

REVISIONS

SHEET NO.	DATE	REVISED

KIN PROJECT INFORMATION

DESIGNATION	PROJECT DESCRIPTION	
1600808	COMPLETE ROAD RECONSTRUCTION OF I-65/I-70 FROM WASHINGTON STREET TO I-65 OVER DELAWARE STREET AND I-70 OVER VALLEY AVENUE	LEAD DES
1901935	ITS FOR I-65/I-70 FROM WASHINGTON STREET TO I-65 OVER DELAWARE STREET AND I-70 OVER VALLEY AVENUE	
1901936	SIGNS, LIGHTING, SIGNALS AND MARKING FOR I-65/I-70 FROM WASHINGTON STREET TO I-65 OVER DELAWARE STREET AND I-70 OVER VALLEY AVENUE	
1901847	BRIDGE REPLACEMENT ON I-65/I-70 NB OVER WASHINGTON STREET	
1901848	BRIDGE REPLACEMENT ON I-65/I-70 SB OVER WASHINGTON STREET	
1901849	BRIDGE REPLACEMENT ON I-65/I-70 SB CD OVER WASHINGTON STREET	
1901850	BRIDGE REPLACEMENT ON I-65/I-70 NB OVER MARKET STREET	
1901851	BRIDGE REPLACEMENT ON I-65/I-70 SB OVER MARKET STREET	
1901852	BRIDGE REPLACEMENT ON I-65/I-70 SB CD OVER MARKET STREET	
1901853	BRIDGE REPLACEMENT ON I-65/I-70 NB OVER CSX RAILROAD & OHIO STREET	
1901854	BRIDGE REPLACEMENT ON I-65/I-70 SB OVER CSX RAILROAD & OHIO STREET	
1901855	BRIDGE REPLACEMENT ON I-65/I-70 SB CD OVER CSX RAILROAD & OHIO STREET	
1901856	BRIDGE REPLACEMENT ON I-65/I-70 NB OVER NEW YORK STREET	
1901857	BRIDGE REPLACEMENT ON I-65/I-70 SB OVER NEW YORK STREET	
1901858	BRIDGE REPLACEMENT ON I-65/I-70 SB CD OVER NEW YORK STREET	
1901861	BRIDGE REPLACEMENT ON I-65/I-70 SB CD OVER VERMONT STREET	
1901862	BRIDGE REPLACEMENT ON I-65 NB & I-70 EB OVER MICHIGAN STREET	
1901863	BRIDGE REPLACEMENT ON I-65 SB/I-70 WB OVER MICHIGAN STREET	
1901864	BRIDGE REPLACEMENT ON I-65/I-70 SB CD OVER MICHIGAN STREET	
1901865	BRIDGE REPLACEMENT ON I-65 NB OVER I-70 EB ENTRANCE RAMP	
1901881	BRIDGE REPLACEMENT ON I-65 NB OVER ST. CLAIR STREET	
1901889	NEW BRIDGE CONSTRUCTION ON I-70 EB OVER ST. CLAIR STREET	
1901892	BRIDGE REPLACEMENT ON I-65 SB/I-70 WB OVER ST. CLAIR STREET	
1901896	NEW BRIDGE CONSTRUCTION ON SB CD OVER ST. CLAIR STREET	
1901897	BRIDGE REPLACEMENT ON I-65 NB OVER EAST 10TH STREET	
1901899	NEW BRIDGE CONSTRUCTION ON I-70 EB OVER EAST 10TH STREET	
1901901	BRIDGE REPLACEMENT ON I-65 SB OVER EAST 10TH STREET	
1901903	BRIDGE REPLACEMENT ON I-70 WB OVER EAST 10TH STREET	
1901905	NEW BRIDGE CONSTRUCTION ON SB CD & RAMP OVER EAST 10TH STREET	
1901906	NEW BRIDGE CONSTRUCTION ON I-65 NB CD EXIT RAMP OVER CENTRAL AVENUE	
1901907	BRIDGE REPLACEMENT ON I-65 NB OVER CENTRAL AVENUE	
1901908	BRIDGE REPLACEMENT ON I-65 SB OVER CENTRAL AVENUE	
1901909	NEW BRIDGE CONSTRUCTION ON I-65 SB CD ENTRANCE RAMP OVER CENTRAL AVE.	
1901914	BRIDGE REPLACEMENT ON I-70 WB TO I-65 NB OVER COLLEGE AVENUE	
1901915	BRIDGE REPLACEMENT ON I-65 NB & PENNSYLVANIA EXIT RAMP OVER COLLEGE AVENUE	
1901917	BRIDGE REPLACEMENT ON I-65 SB & SB CD RAMP OVER COLLEGE AVENUE	
1901918	BRIDGE REPLACEMENT ON I-65 SB & DELAWARE ENTRANCE RAMP TO I-70 EB OVER COLLEGE AVENUE & FIVE RAMPS	
1901919	BRIDGE REPLACEMENT ON I-65 NB OVER I-70 WB & RAMP	
1901920	BRIDGE REPLACEMENT ON I-70 WB TO I-65 NB OVER THREE RAMPS	
1901921	BRIDGE REPLACEMENT ON I-65 SB OVER I-70 WB & SB CD RAMP	
1901922	NEW BRIDGE CONSTRUCTION ON I-70 EB OVER I-65 NB	
1901923	BRIDGE REPLACEMENT ON I-70 WB & SB CD OVER LEWIS STREET & MONON TRAIL	
1901925	NEW BRIDGE CONSTRUCTION ON I-70 WB TO I-65 NB OVER LEWIS STREET & MONON TRAIL	
1901927	NOT USED	
1901928	BRIDGE REPLACEMENT ON I-70 EB OVER LEWIS STREET & MONON TRAIL	
1901929	PREVENTATIVE MAINTENANCE ON I-70 WB OVER ROOSEVELT AT COMMERCE AVENUE	
1901930	PREVENTATIVE MAINTENANCE ON I-70 EB OVER ROOSEVELT AT COMMERCE AVENUE	
1901931	PREVENTATIVE MAINTENANCE ON I-70 WB OVER VALLEY AVENUE	
1901932	PREVENTATIVE MAINTENANCE ON I-70 EB OVER VALLEY AVENUE	
1901933	REHABILITATE AND WIDEN ON I-65 OVER 7 STREETS, ACCESS RD, MONORAIL (AKA "MONSTER BRIDGE") - PENNSYLVANIA EXIT RAMP	
1901934	REHABILITATE AND WIDEN ON I-65 OVER 7 STREETS, ACCESS RD, MONORAIL (AKA "MONSTER BRIDGE") - DELAWARE ENTRANCE RAMP	
1902179	BRIDGE REPLACEMENT ON I-65 NB/I70 EB OVER VERMONT STREET	
1902180	BRIDGE REPLACEMENT ON I-65 SB/I70 WB OVER VERMONT STREET	

INDEX

SHEET NO.	DESIGNATION
1	TITLE
2	INDEX
3	MAINTENANCE OF TRAFFIC
4	LAYOUT
5	GENERAL PLAN - PLAN & ELEVATION VIEWS
6	GENERAL PLAN - TYPICAL SECTION
7	BENTS NO. 1 AND NO. 2 DETAILS
8	BENT DETAILS
9	FRAMING PLAN
10	BEAM DETAILS
11	FLOOR DETAILS
12	APPROACH SLAB
13	WALL LAYOUT
14	WALL LAYOUT

RECOMMENDED FOR APPROVAL: _____ DESIGN ENGINEER #/#/# DATE

DESIGNED: B. WRIGHT DRAWN: K. COFFMAN

CHECKED: M. EICHENAUER CHECKED: B. WRIGHT

INDIANA
DEPARTMENT OF TRANSPORTATION

INDEX

HORIZONTAL SCALE	BRIDGE FILE
N/A	I65-111-10603 CD
VERTICAL SCALE	DESIGNATION
N/A	1901849
SURVEY BOOK	SHEET
ELECTRONIC	2 OF 14
CONTRACT	PROJECT
B-36910	1600808

BFS NO. 6412

\\bfsn1241\jobs5\641200.0000\Proj.Development\Design\Drawings\BRIDGES\01 OVER WASHINGTON STREET\Structure 1901849\1901849_S_BR_IND01.dwg Dylan Piercefield Plot: 2/24/2020 6:55 AM Save: 2/24/2020 6:54 AM

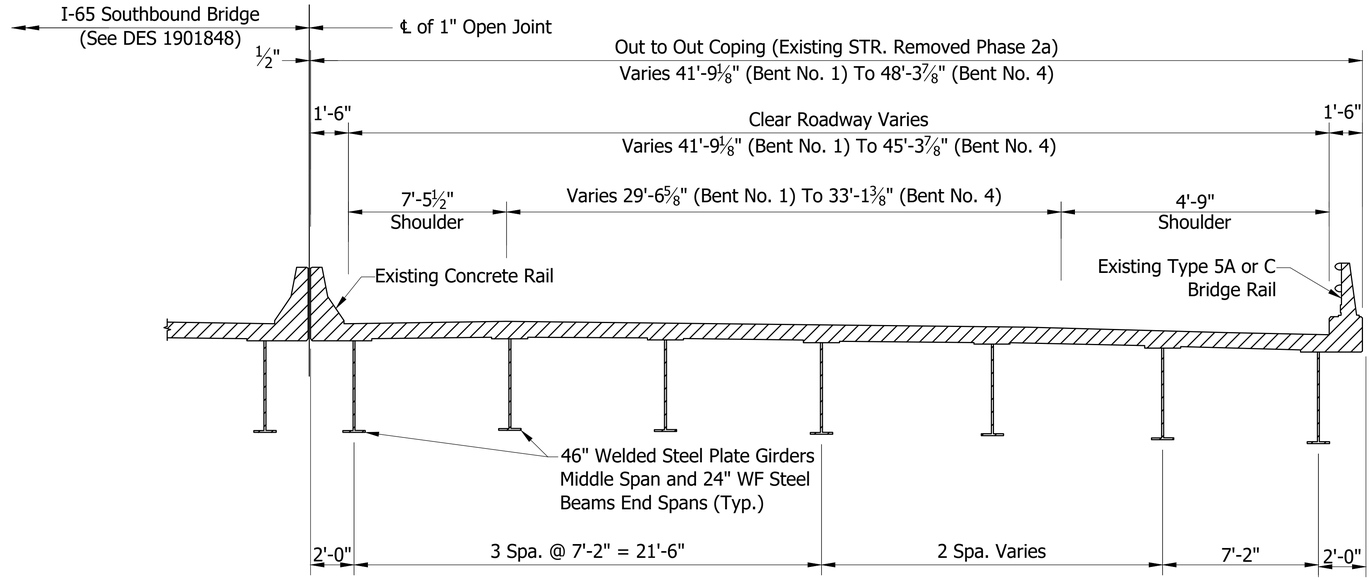

EXISTING NORTHBOUND TYPICAL SECTION

NOT TO SCALE

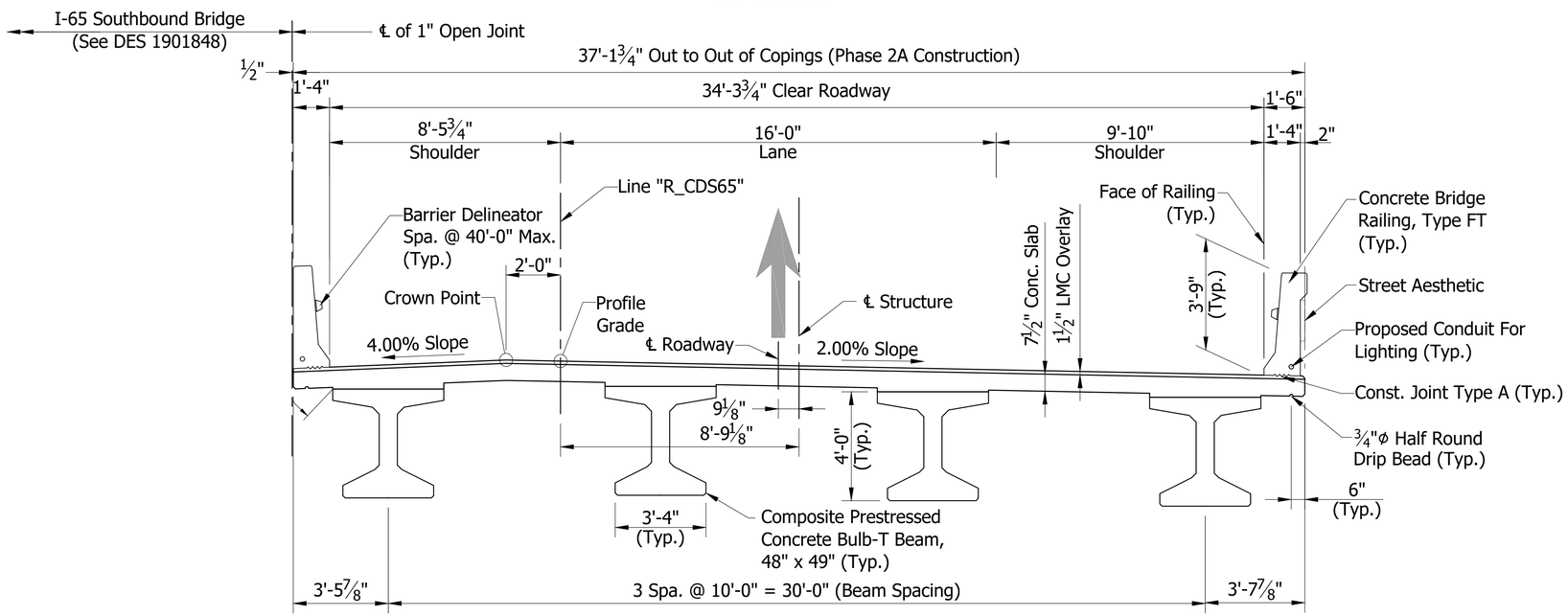

TYPICAL SECTION

Scale: 1/4"= 1'-0"

	RECOMMENDED FOR APPROVAL: DESIGN ENGINEER DATE	INDIANA DEPARTMENT OF TRANSPORTATION	HORIZONTAL SCALE: As Noted	BRIDGE FILE: I65-111-10603 CD
			VERTICAL SCALE: N/A	DESIGNATION: 1901849
	DESIGNED: B. WRIGHT DRAWN: K. COFFMAN	MAINTENANCE OF TRAFFIC	SURVEY BOOK: ELECTRONIC	SHEET: 3 OF 14
	CHECKED: M. EICHENAUER CHECKED: B. WRIGHT		CONTRACT: B-36910	PROJECT: 1600808

6412

BPS NO.

\\bfsnt241\Jobs5\641200.0000\ProjDevelopment\Design\Drawings\BRIDGES\01 OVER WASHINGTON STREET\Structure 1901849\1901849_S_BR_MOT01.dwg Dylan Piercefield Plot:2/24/2020 5:32 AM Save:2/17/2020 11:23 AM

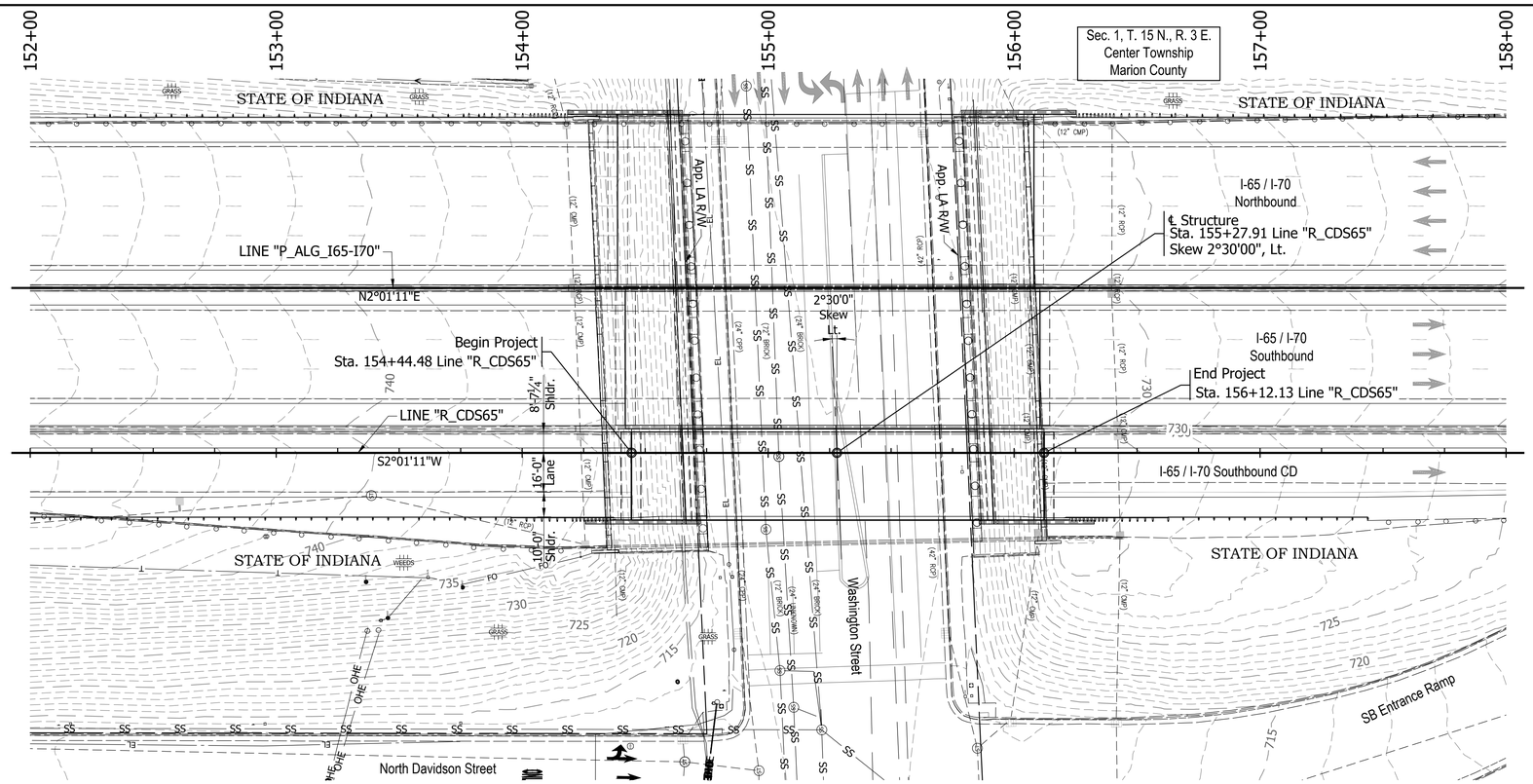

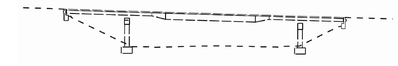

EXISTING STRUCTURE

The existing structure was built in 1974. Structure was rehabilitated in 2003. The structure is a 3-span continuous composite bridge with 46" welded steel plate girders in the middle span and 24" WF steel beams in the end spans.

Span lengths: 1 @ 27'-3", 1 @ 111'-6", 1 @ 38'-6"

Clear roadway width varies from 41'-9⅛" to 45'-3⅞". Total length of 179'-10¾"

Existing structure to be removed.

Existing plans are on file with the Indiana Department of Transportation under Bridge File No. I-65-112-5725 and I-65-112-5725A.

EARTHWORK TABULATION

See Roadway Plans (DES #_____) for earthwork tabulation.

NOTE: ALL TOPOGRAPHY INFORMATION REFERENCED TO LINE "R_CDS65" UNLESS NOTED.

ALL R/W ON THIS SHEET DESCRIBED FROM LINE "R_CDS65" UNLESS OTHERWISE NOTED

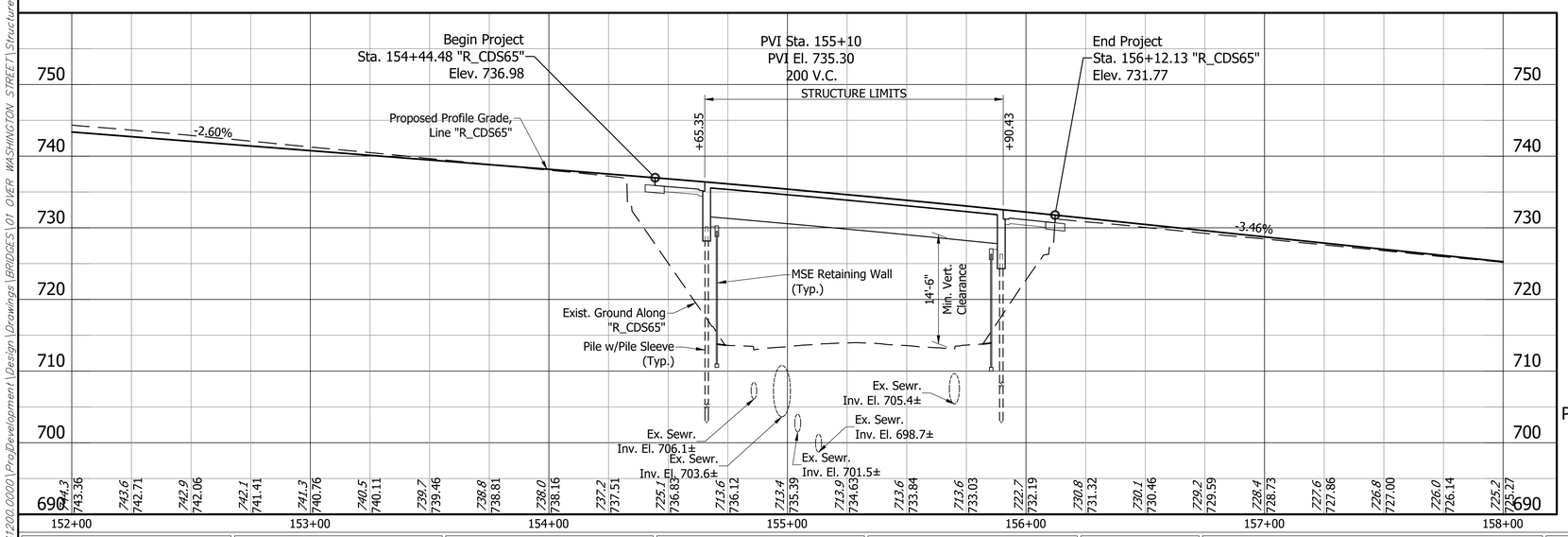

Notes:

1. For R/W and property information, see Location Control Route Survey (DES # _____).
2. For alignment data, see Geometric Layout Sheets (DES #_____).
3. See Road Plans (DES #_____) for Horizontal & Vertical Control Data.

PRESTRESSED COMPOSITE CONCRETE BULB-TEE BEAM BRIDGE
1 SPAN: 123'-6"
34'-3 3/4" CLEAR ROADWAY; SKEW 02°30'00" LT.
I-65 / I-70 S.B. CD OVER WASHINGTON STREET
MARION COUNTY

RECOMMENDED FOR APPROVAL: _____ DESIGN ENGINEER	DATE ##/##/##	INDIANA DEPARTMENT OF TRANSPORTATION	HORIZONTAL SCALE: 1" = 30'
DESIGNED: B. WRIGHT	DRAWN: L. KIRSCH		VERTICAL SCALE: 1" = 10'
CHECKED: M. EICHENAUER	CHECKED: B. WRIGHT	LAYOUT	BRIDGE FILE: I65-111-10603 CD
			DESIGNATION: 1901849
			SURVEY BOOK: ELECTRONIC
			SHEET: 4 OF 14
			CONTRACT: B-36910
			PROJECT: 1600808

BFS NO. 6412

\\bfsnt241\Jobs5\641200.0000\Pro\Development\Design\Drawings\BRIDGES\01 OVER WASHINGTON STREET\Structure 1901849\901849_S_BR_LAY01.dwg Dylan Piercefield Plot:2/24/2020 5:33 AM Save:2/11/2020 10:10 AM

STRUCTURE TO BE BUILT ON A 200' VERTICAL CURVE

PVI Sta. 155+10
PVI El. 735.30
200 V.C.
-2.60% -3.46%

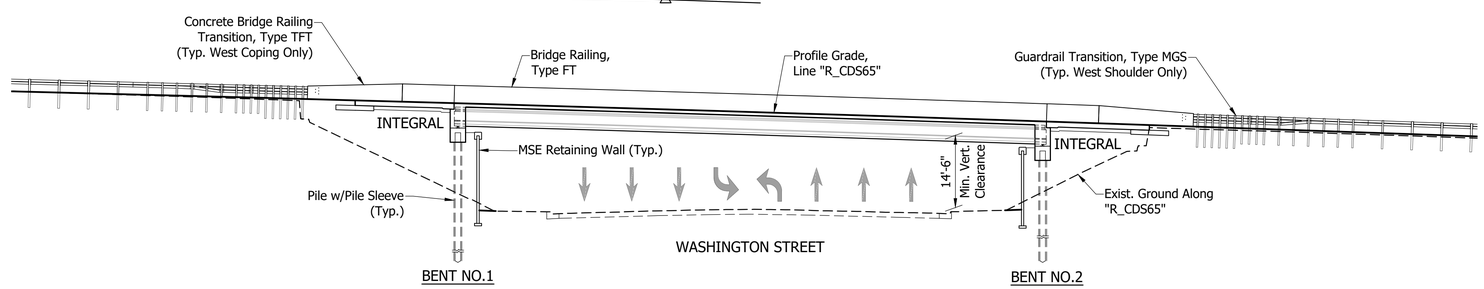

ELEVATION

Scale: 1/8" = 1'-0"

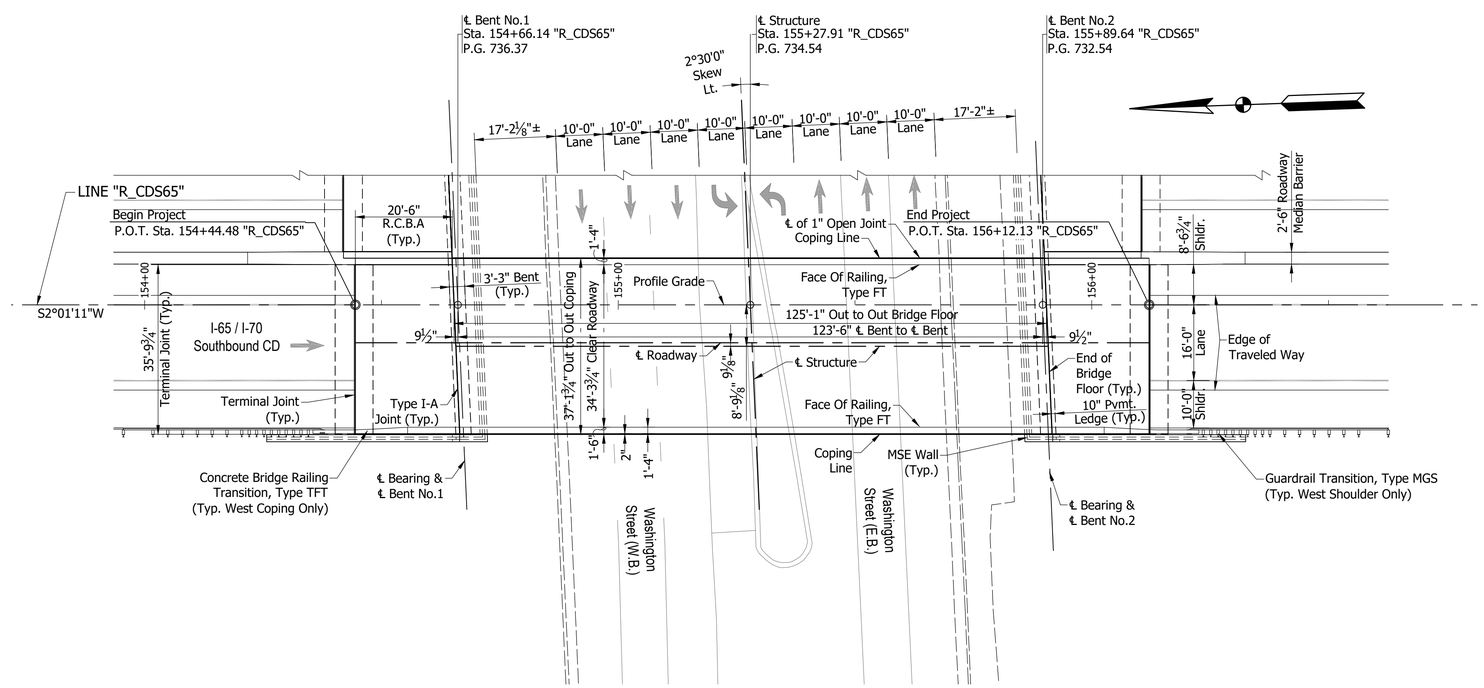

PLAN

Scale: 1/8" = 1'-0"

NOTE:
See Sheet 6 For Typical Section

PRESTRESSED COMPOSITE CONCRETE BULB-TEE BEAM BRIDGE
1 SPAN: 123'-6"
34'-3 3/4" CLEAR ROADWAY; SKEW 02°30'00" LT.
I-65 / I-70 S.B. CD OVER WASHINGTON STREET
MARION COUNTY

RECOMMENDED FOR APPROVAL: _____ DESIGN ENGINEER #/#/# DATE

DESIGNED: B. WRIGHT DRAWN: L. KIRSCH
CHECKED: M. EICHENAUER CHECKED: B. WRIGHT

INDIANA
DEPARTMENT OF TRANSPORTATION

GENERAL PLAN - PLAN & ELEVATION VIEWS

HORIZONTAL SCALE	BRIDGE FILE
As Noted	I65-111-10603 CD
VERTICAL SCALE	DESIGNATION
N/A	1901849
SURVEY BOOK	SHEET
ELECTRONIC	5 OF 14
CONTRACT	PROJECT
B-36910	1600808

BFS NO. 6412

\\bfsn1241\jobs5\641200.0000\ProjDevelopment\Design\Drawings\BRIDGES\01 OVER WASHINGTON STREET\Structure 1901849\1901849_S-BR_PLN01.dwg Dylan Piercefield Plot:2/24/2020 5:33 AM Save:2/17/2020 11:51 AM

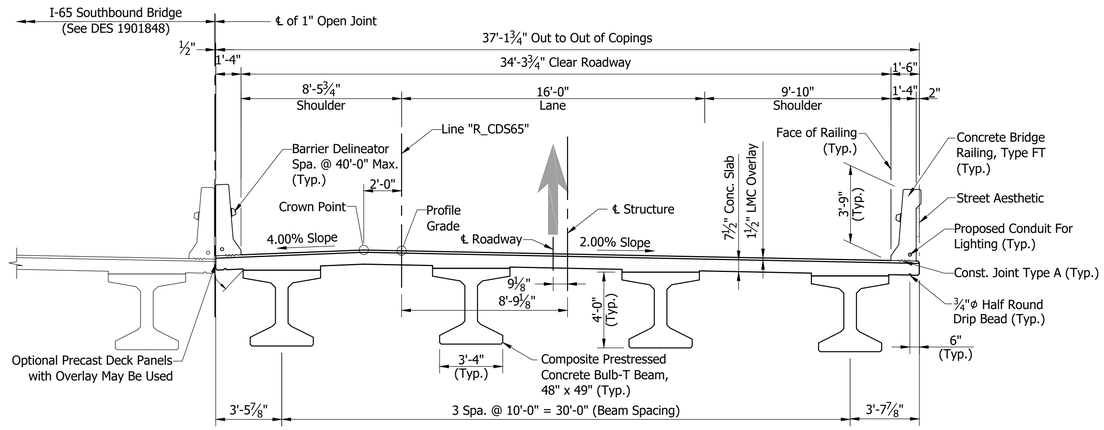

TYPICAL SECTION

Scale: 1/4"= 1'-0"

GENERAL NOTES

The existing structure shall be removed.

Reinforcing bars covering shall be 3 ½" in top and 1" min. in bottom of floor slabs and 3" in footings except bottom steel which shall be 4", and 2" in all other parts, unless noted.

Concrete in floor slab, and diaphragms, barriers, and end bents shall be an alternate Class C in accordance with the Technical Provisions.

Reinforcing Bars in Deck, Barrier, and End Bent Diaphragm Extending into the Deck shall be Stainless Steel. Reinforcing Bars in End Bent Diaphragm not Extending into the Deck and in the Cap shall be Epoxy Coated.

All exposed faces of the MSE walls and reinforced concrete bridge approach slabs shall receive surface seal.

See Bridge Aesthetic Plan for Architectural Details.

DESIGN DATA

LIVE LOAD:

Superstructure and Substructure Designed for HL-93 loading in accordance with the AASHTO LRFD Bridge Design Specifications, 8th Edition, 2017 and its subsequent revisions.

DEAD LOAD:

Designed for Actual Dead Load plus 35 psf of future wearing surface, and 15 psf for SIP Metal Deck Forms.

FLOOR SLAB:

Slab designed with a 7 ½" structural depth and a 1 ½" very early strength LMC wearing surface.

DESIGN STRESSES

CONSTRUCTION LOADING:

The exterior girder has been checked for strength, deflection, and overturning using the construction loads shown below. Cantilever overhang brackets were assumed for support of the deck overhang past the edge of the exterior beam. The finishing machine was assumed to be supported 6 in. outside the vertical coping form. The top overhang brackets were assumed to be located 6 in. past the edge of the vertical coping form. The bottom overhang brackets were assumed to be braced against the intersection of the girder bottom flange and web.

DECK FALSEWORK LOADS:

Designed for 15 psf for permanent metal stay-in-place deck forms, removable deck forms, and 2 ft. exterior walkway.

CONSTRUCTION LIVE LOAD:

Designed for 20 psf extending 2 ft. past the edge of coping and 75 lb/ft vertical force applied at a distance of 6 in. outside the face of coping over a 30 foot length of the deck centered with the finishing machine.

FINISHING-MACHINE LOAD:

4500 lb distributed over 10 ft. along the coping.

WIND LOAD:

Designed for 70 mph horizontal wind load in accordance with LRFD 3.8.1.

ULTIMATE DESIGN STRENGTHS:

Class "A" Concrete	f'c = 3,500 p.s.i.
Class "B" Concrete	f'c = 3,000 p.s.i.
Class "C" Concrete	f'c = 4,000 p.s.i.
Reinforcing Steel (Grade 60)	Fy = 60,000 p.s.i. (barrier)
	Fy = 75,000 p.s.i. (deck)
	Fy = 75,000 p.s.i. (all other locations)

SEISMIC DESIGN DATA:

Seismic Site Class	C
PGA (g)	0.051
S_s (g)	0.12
S_1 (g)	0.051
S_{D1} (g)	0.086
Seismic Design Category	A

PRESTRESSED COMPOSITE CONCRETE BULB-TEE BEAM BRIDGE
1 SPAN: 123'-6"
34'-3 3/4" CLEAR ROADWAY; SKEW 02°30'00" LT.
I-65 / I-70 S.B. CD OVER WASHINGTON STREET
MARION COUNTY

RECOMMENDED FOR APPROVAL: _____ DESIGN ENGINEER — #/#/# DATE

DESIGNED: B. WRIGHT DRAWN: L. KIRSCH
CHECKED: M. EICHENAUER CHECKED: B. WRIGHT

INDIANA
DEPARTMENT OF TRANSPORTATION

GENERAL PLAN - TYPICAL SECTION

HORIZONTAL SCALE	BRIDGE FILE
As Noted	I65-111-10603 CD
VERTICAL SCALE	DESIGNATION
N/A	1901849
SURVEY BOOK	SHEET
ELECTRONIC	6 OF 14
CONTRACT	PROJECT
B-36910	1600808

BFS NO. 6412

\\bfsn1241\jobs5\641200.0000\ProjDevelopment\Design\Drawings\BRIDGES\01 OVER WASHINGTON STREET\Structure 1901849\1901849_S_BR_PLN02.dwg Dylan Piercefield Plot:2/24/2020 5:33 AM Save:2/20/2020 10:08 AM

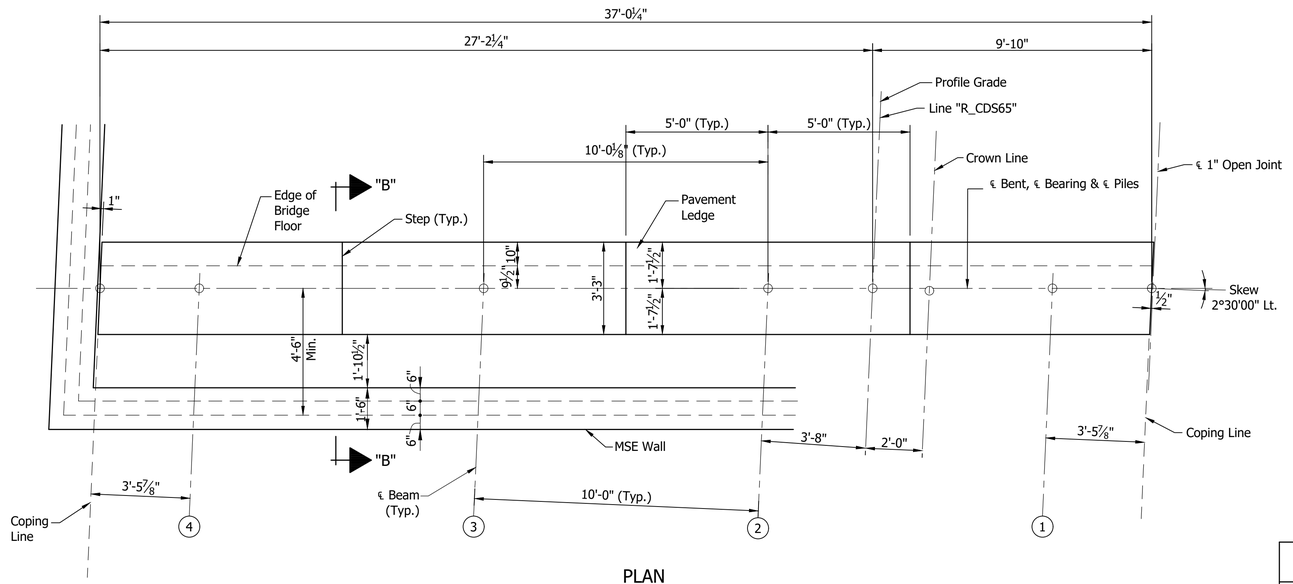

PLAN
BENT NO.1 SB CD (SHOWN)
BENT NO.2 SB CD (SIMILAR)
Scale: ⅜"=1'-0"

SEAT ELEVATIONS				
Beam No.	4	3	2	1
Bent No.1	730.14	730.36	730.57	730.53
Bent No.2	726.26	726.48	726.65	726.66

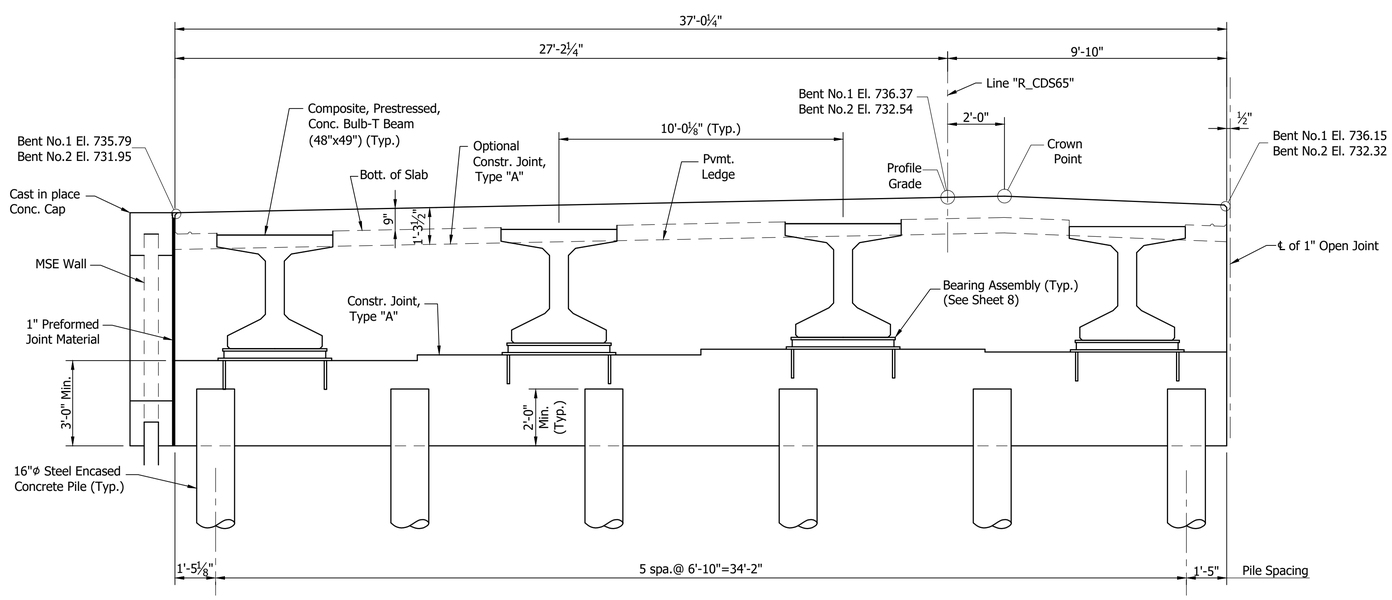

SECTION ALONG ℄ BENT
Scale: ⅜"=1'-0"

RECOMMENDED FOR APPROVAL: _____ DESIGN ENGINEER DATE

DESIGNED: V. SATHIRAJU DRAWN: D. SHEETZ
CHECKED: B. WRIGHT CHECKED: B. WRIGHT

INDIANA
DEPARTMENT OF TRANSPORTATION

BENTS NO. 1 AND NO. 2 DETAILS

HORIZONTAL SCALE	BRIDGE FILE
As Noted	I65-111-10603 CD
VERTICAL SCALE	DESIGNATION
N/A	1901849
SURVEY BOOK	SHEET
ELECTRONIC	7 OF 14
CONTRACT	PROJECT
B-36910	1600808

BFS NO. 6412

\\bfsn1241\jobs5\641200.0000\Proj.Development\Design\Drawings\BRIDGES\01 OVER WASHINGTON STREET\Structure 1901849\1901849_S_BR_BNT01.dwg Dylan Piercefield Plot:2/24/2020 11:05 AM Save:2/24/2020 11:02 AM

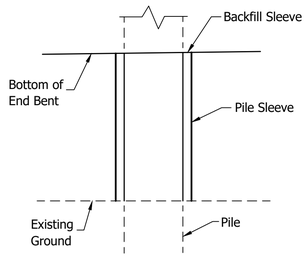

PILE SLEEVE DETAIL

Not to Scale

⊛ As an alternate a ⅞"Φx1'-3" Long Headed Automatic Welded Stud may be used.

⊗ Setting Tolerance of Bottom Plate-Level with to not more than 1/16" below top of Concrete.

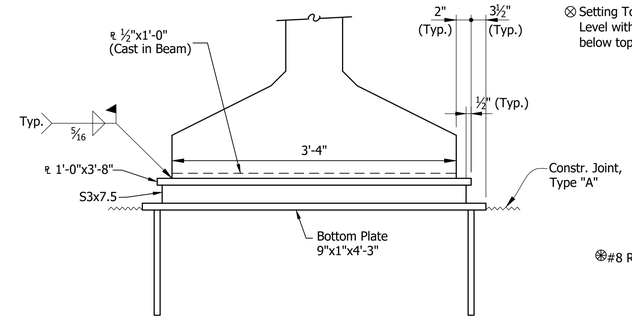

ELEVATION

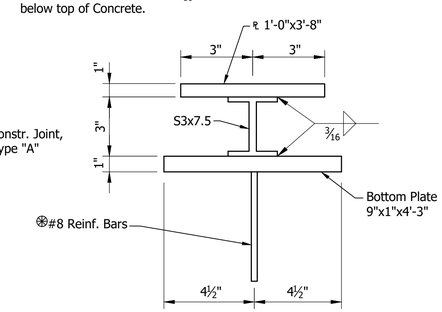

SECTION

BEARING ASSEMBLY

Not to Scale

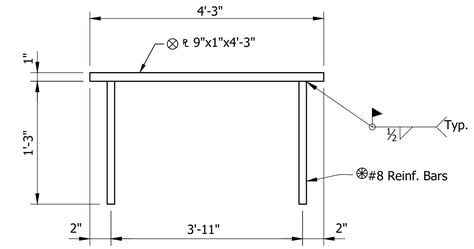

BOTTOM PLATE DETAIL

Not to Scale

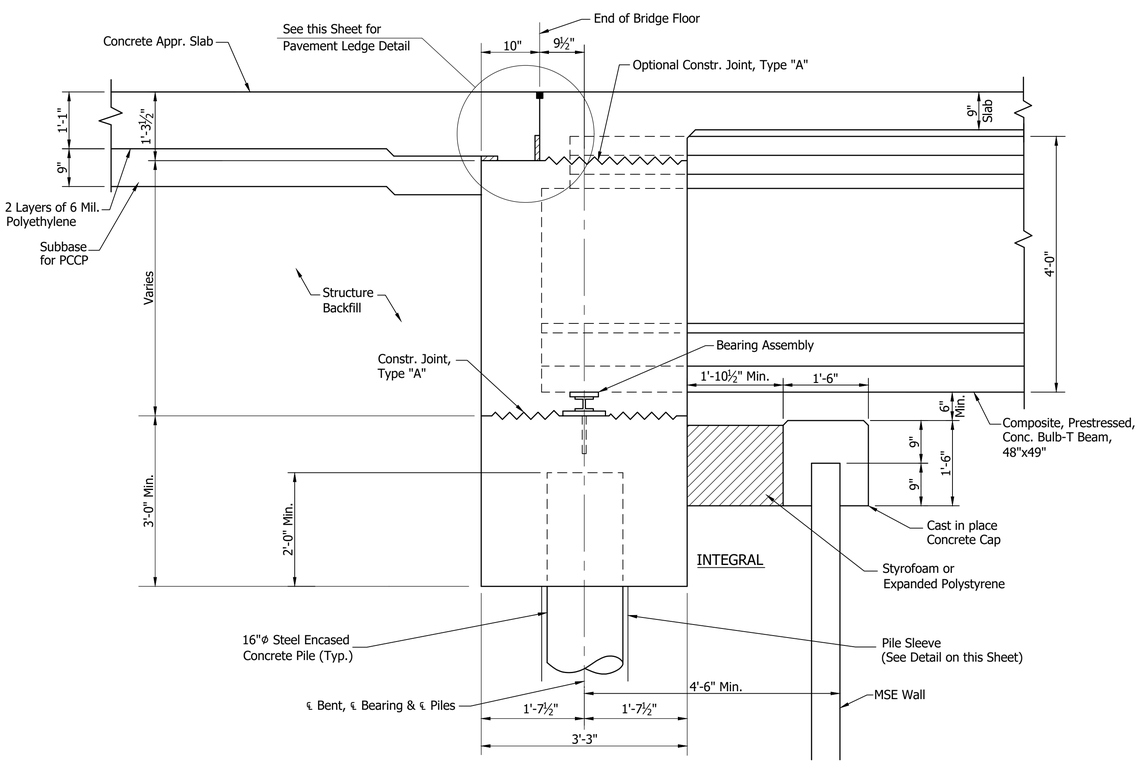

SECTION "B-B"

Not to Scale

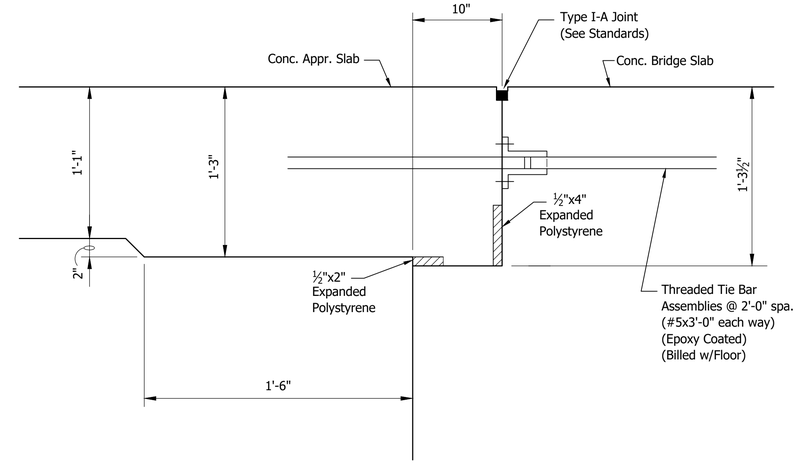

PAVEMENT LEDGE DETAIL

Not to Scale

RECOMMENDED FOR APPROVAL: DESIGN ENGINEER DATE	INDIANA DEPARTMENT OF TRANSPORTATION	HORIZONTAL SCALE: As Noted	BRIDGE FILE: I65-111-10603 CD	6412
		VERTICAL SCALE: N/A	DESIGNATION: 1901849	
DESIGNED: V. SATHIRAJU DRAWN: D. SHEETZ	BENT DETAILS	SURVEY BOOK: ELECTRONIC	SHEET: 8 OF 14	BFS NO.
CHECKED: B. WRIGHT CHECKED: B. WRIGHT		CONTRACT: B-36910	PROJECT: 1600808	

\\bfsnt241\Jobs5\641200.0000\ProjDevelopment\Design\Drawings\BRIDGES\01 OVER WASHINGTON STREET\Structure 1901849\1901849_S_BR_BENT DETAIL.dwg Dylan Piercefield Plot:2/24/2020 5:33 AM Save:2/17/2020 11:31 AM

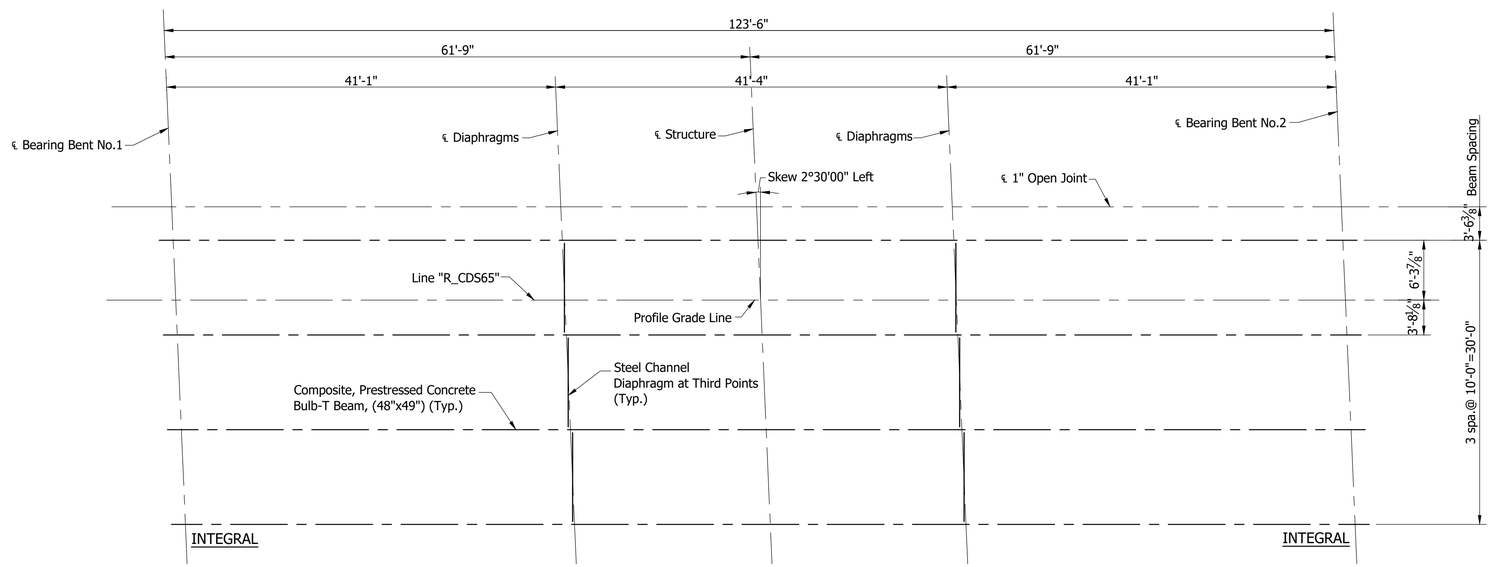

BEAM ERECTION PLAN

Scale: 1/8" = 1'-0"

RECOMMENDED FOR APPROVAL: DESIGN ENGINEER DATE	INDIANA DEPARTMENT OF TRANSPORTATION	HORIZONTAL SCALE: As Noted	BRIDGE FILE: I65-111-10603 CD
		VERTICAL SCALE: N/A	DESIGNATION: 1901849
DESIGNED: J. GOULD DRAWN: D. SHEETZ	FRAMING PLAN	SURVEY BOOK: ELECTRONIC	SHEET: 9 OF 14
CHECKED: B. WRIGHT CHECKED: B. WRIGHT		CONTRACT: B-36910	PROJECT: 1600808

BFS NO. 6412

\\bfsnt241\jobs5\641200.0000\ProjDevelopment\Design\Drawings\BRIDGES\01 OVER WASHINGTON STREET\Structure 1901849\1901849_S_BR_FRM01.dwg Dylan Piercefield Plot:2/24/2020 5:33 AM Save:12/12/2019 8:06 AM

Notes:
Connect Angles to Beams with
⅞"ϕ H.S. Bolt with Hardened Washer, (ASTM F436)
Connect Channel to Angles with ⅞"ϕ H.S. Bolt
with Lock Nut, one Hardened Washer and
2 Washers 3"x5/16"x0'-3" (ASTM F436)

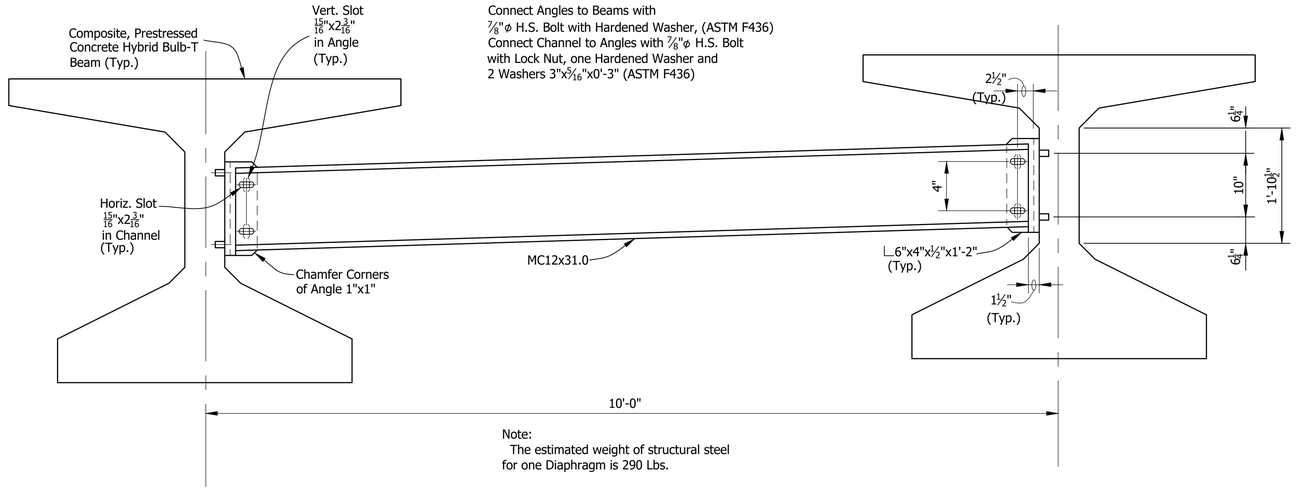

Note:
The estimated weight of structural steel for one Diaphragm is 290 Lbs.

ELEVATION
Not to Scale

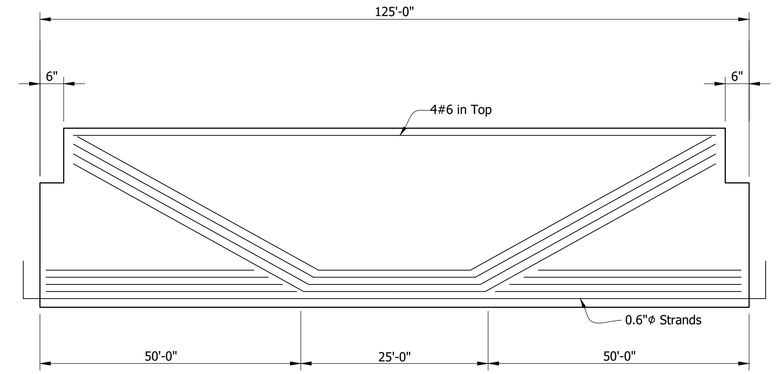

BEAM ELEVATION
SPAN "A"
SHOWING DRAPED STRANDS
Not to Scale

BOTTOM STRAND DEBONDING			
SPAN	STRAND SYMBOL	DEBONDED LENGTH FROM EACH END OF BEAM	APPROXIMATE STRAND SHORTENING
A	◬	3'-0"	¼"

✳ Denotes Epoxy Coated

Note:
Bars 1" Clear unless noted.

1. Surface Seal req'd on top of all Beams and Exterior Face of Exterior Beams
2. 1"ϕ Holes or ¾"ϕ Inserts for Dowels at Bent or Pier. (See Beam Plans)
3. PL ½"x12"x3'-2½" at End Bent Ends only

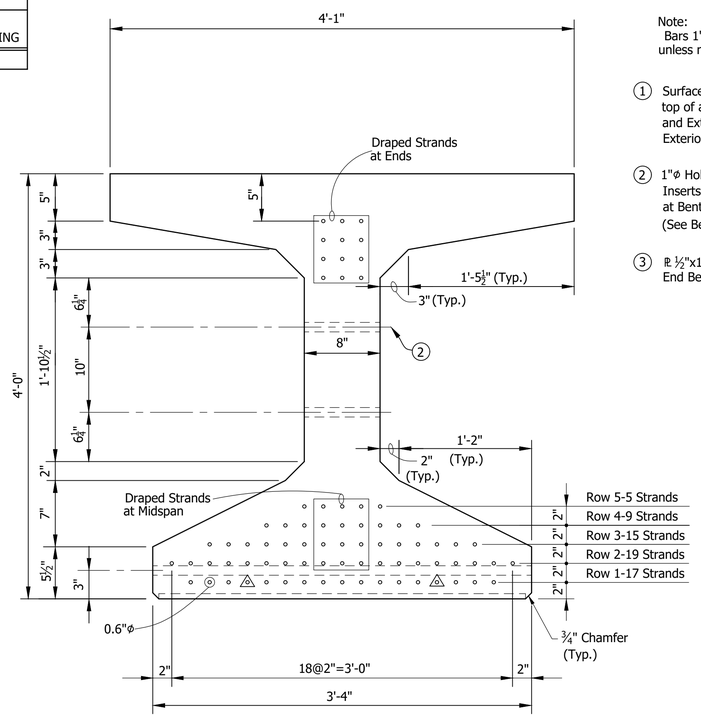

SECTION SHOWING STRANDS

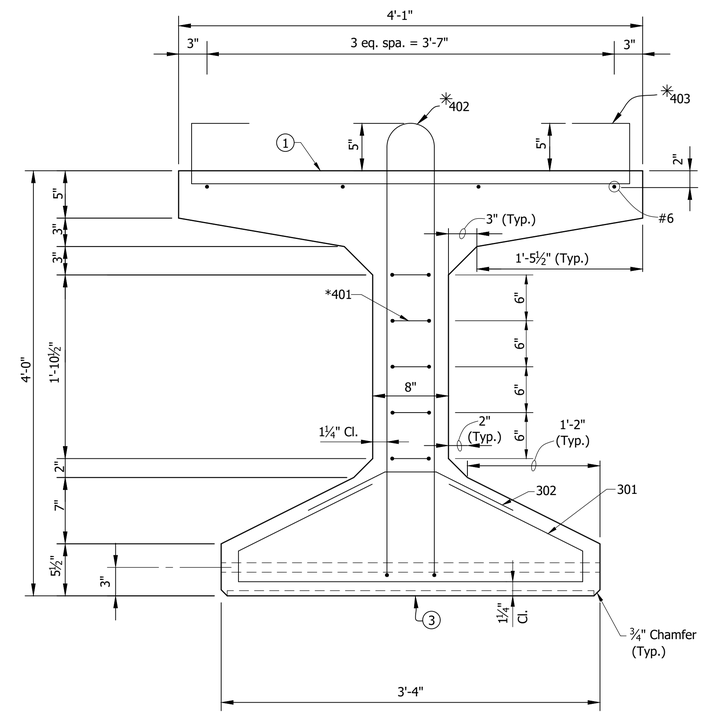

SECTION SHOWING REINFORCING

BEAM SECTIONS
Not to Scale

RECOMMENDED FOR APPROVAL: DESIGN ENGINEER DATE	INDIANA DEPARTMENT OF TRANSPORTATION	HORIZONTAL SCALE: As Noted	BRIDGE FILE: I65-111-10603 CD
		VERTICAL SCALE: N/A	DESIGNATION: 1901849
DESIGNED: V. SATHIRAJU DRAWN: J. BIER	BEAM DETAILS	SURVEY BOOK: ELECTRONIC	SHEET: 10 OF 14
CHECKED: B. WRIGHT CHECKED: B. WRIGHT		CONTRACT: B-36910	PROJECT: 1600808

BFS NO. 6412

\\bfsn1241\Jobs5\641200.0000\Proj\Development\Design\Drawings\BRIDGES\01 OVER WASHINGTON STREET\Structure 1901849\1901849_S_BR_BMD01.dwg Dylan Piercefield Plot:2/24/2020 5:33 AM Save:1/27/2020 2:54 PM

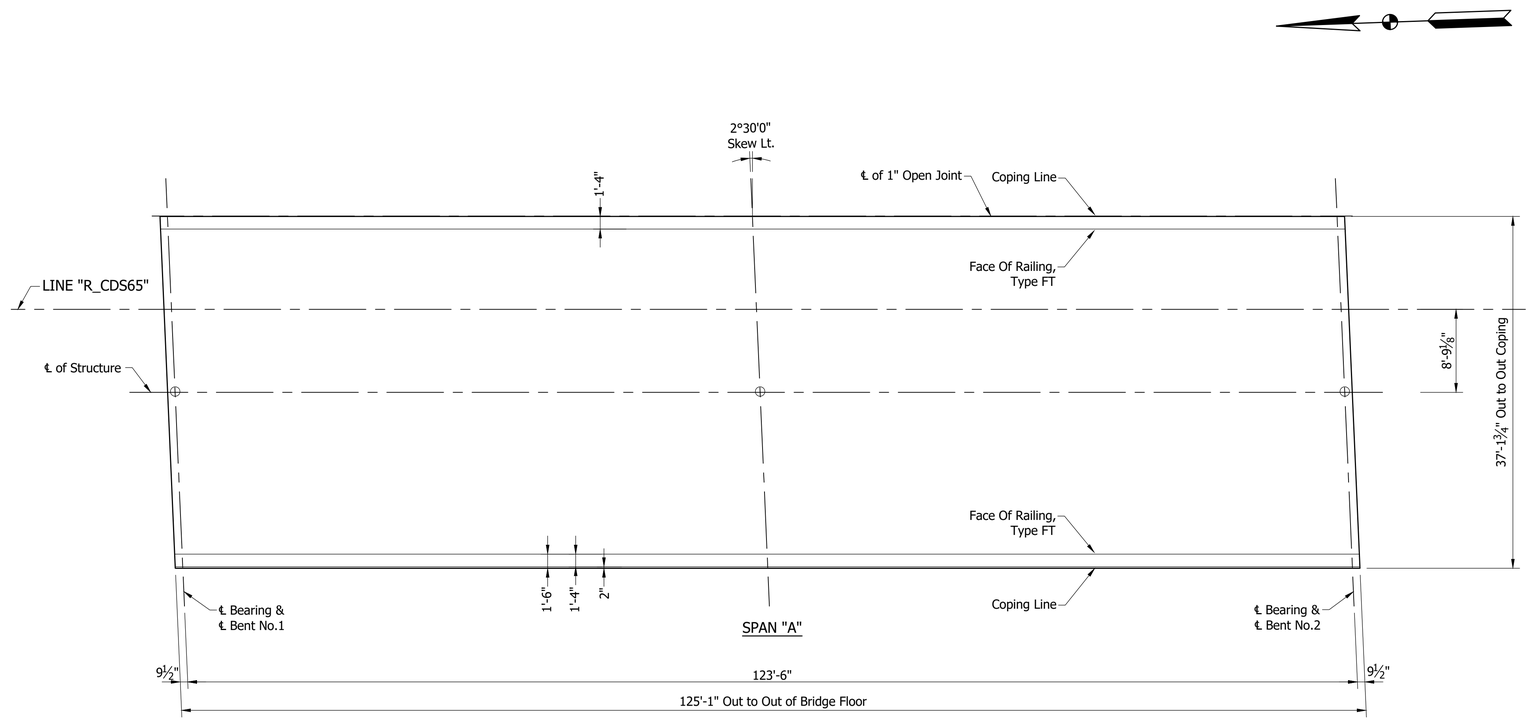

FLOOR PLAN

Scale: 1/8" = 1'-0"

NOTE:
See Sheet ____ For _____

RECOMMENDED FOR APPROVAL: _____ DESIGN ENGINEER	#/#/# DATE	INDIANA DEPARTMENT OF TRANSPORTATION	HORIZONTAL SCALE: As Noted	BRIDGE FILE: I65-111-10603 CD
			VERTICAL SCALE: N/A	DESIGNATION: 1901849
DESIGNED: B. WRIGHT	DRAWN: L. KIRSCH	FLOOR DETAILS	SURVEY BOOK: ELECTRONIC	SHEET: 11 OF 14
CHECKED: M. EICHENAUER	CHECKED: B. WRIGHT		CONTRACT: B-36910	PROJECT: 1600808

BFS NO. 6412

\\bfsn1241\jobs5\641200.0000\Proj\Development\Design\Drawings\BRIDGES\01 OVER WASHINGTON STREET\Structure 1901849\1901849_S-BR_FLR01.dwg Dylan Piercefield Plot:2/24/2020 5:33 AM Save:2/17/2020 11:40 AM

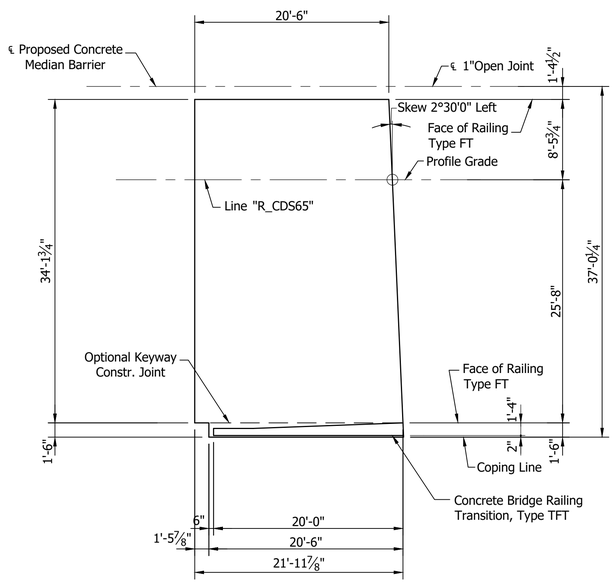

PLAN
NORTH SLAB
Scale: ⅛"=1'-0"

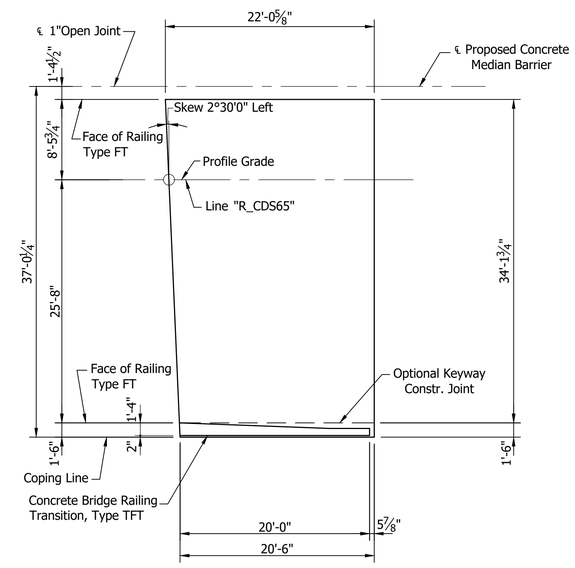

PLAN
SOUTH SLAB
Scale: ⅛"=1'-0"

RECOMMENDED FOR APPROVAL: DESIGN ENGINEER DATE	INDIANA DEPARTMENT OF TRANSPORTATION	HORIZONTAL SCALE: As Noted	BRIDGE FILE: I65-111-10603 CD	
		VERTICAL SCALE: N/A	DESIGNATION: 1901849	
DESIGNED: D. SHEETZ DRAWN: D. SHEETZ	APPROACH SLAB	SURVEY BOOK: ELECTRONIC	SHEET: 12 OF 14	
CHECKED: B. WRIGHT CHECKED: M. MATEL		CONTRACT: B-36910	PROJECT: 1600808	

BFS NO. 6412

\\bfsnt241\jobs5\641200.0000\ProjDevelopment\Design\Drawings\BRIDGES\01 OVER WASHINGTON STREET\Structure 1901849\1901849_S_BR_AP501.dwg Dylan Piercefield Plot:2/24/2020 5:34 AM Save:1/27/2020 2:54 PM

\\bfsn1241\Jobs5\641200.0000\Proj\Development\Design\Drawings\BRIDGES\01 OVER WASHINGTON STREET\Structure 1901849\1901849_S_BR_WL01.dwg Dylan Piercefield Plot:2/24/2020 11:05 AM Save:2/24/2020 11:03 AM

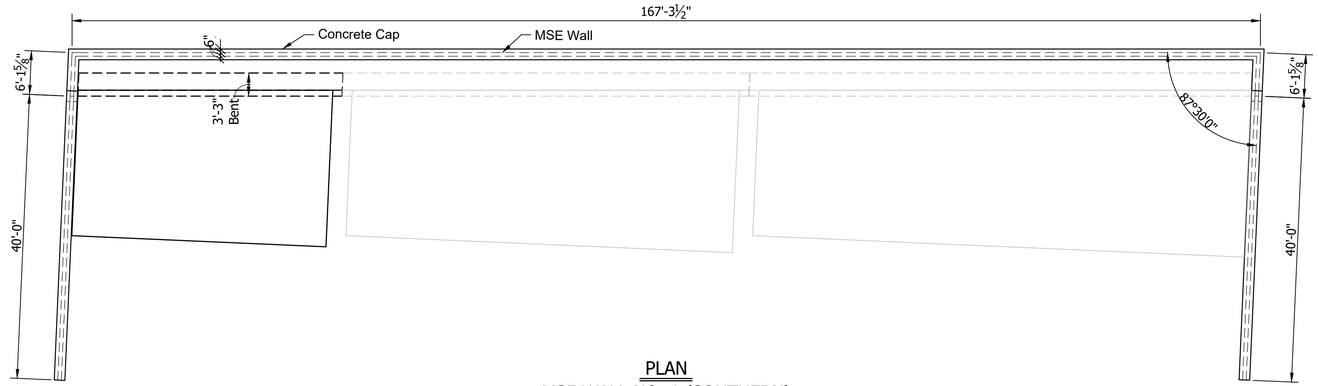

PLAN
MSE WALL NO. 1 (SOUTHERN)
Scale: 3/32"=1'-0"

NOTE:
Elevation Looking At Back Face of Wall

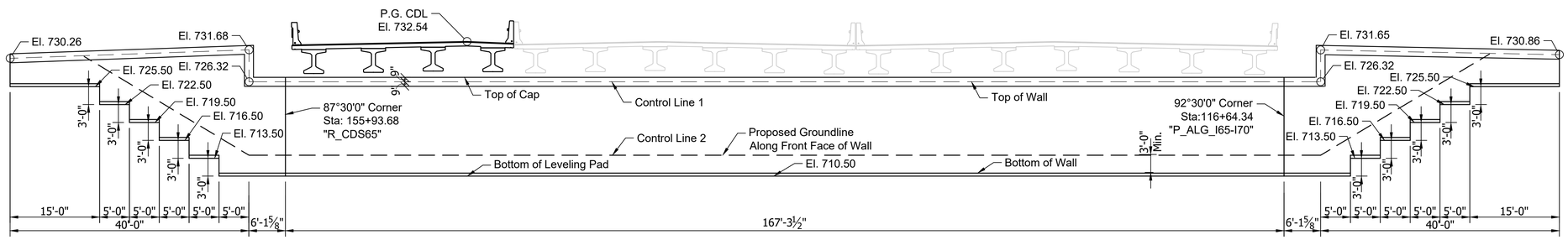

ELEVATION
MSE WALL NO. 1 (SOUTHERN)
Scale: 3/32"=1'-0"

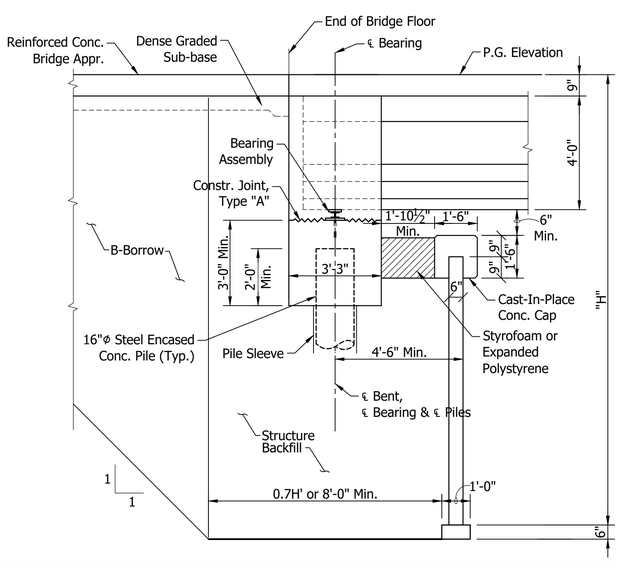

SECTION
MSE WALL NO. 1
Scale: 3/8"=1'-0"

	RECOMMENDED FOR APPROVAL: DESIGN ENGINEER DATE	INDIANA DEPARTMENT OF TRANSPORTATION	HORIZONTAL SCALE: As Noted	BRIDGE FILE: I65-111-10603 CD
			VERTICAL SCALE: N/A	DESIGNATION: 1901849
	DESIGNED: B. WRIGHT DRAWN: D. PIERCEFIELD	WALL LAYOUT	SURVEY BOOK: ELECTRONIC	SHEET: 13 OF 14
	CHECKED: M. EICHENAUER CHECKED: B. WRIGHT		CONTRACT: B-36910	PROJECT: 1600808

6412
BFS NO.

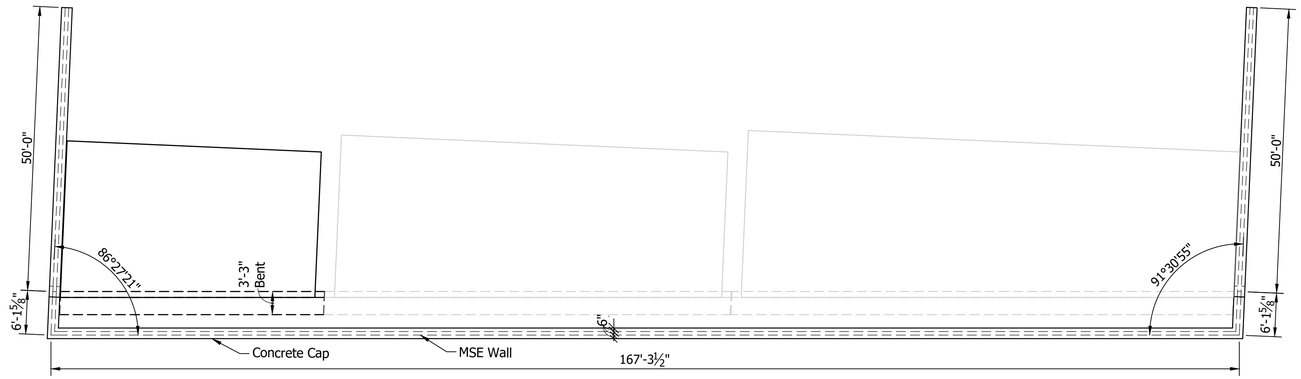

PLAN
MSE WALL NO. 2 (NORTHERN)
Scale: 3/32"=1'-0"

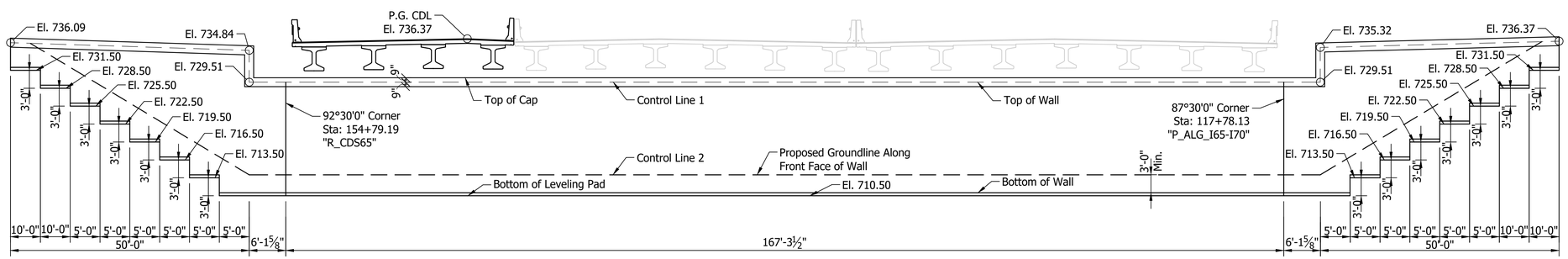

ELEVATION
MSE WALL NO. 2 (NORTHERN)
Scale: 3/32"=1'-0"

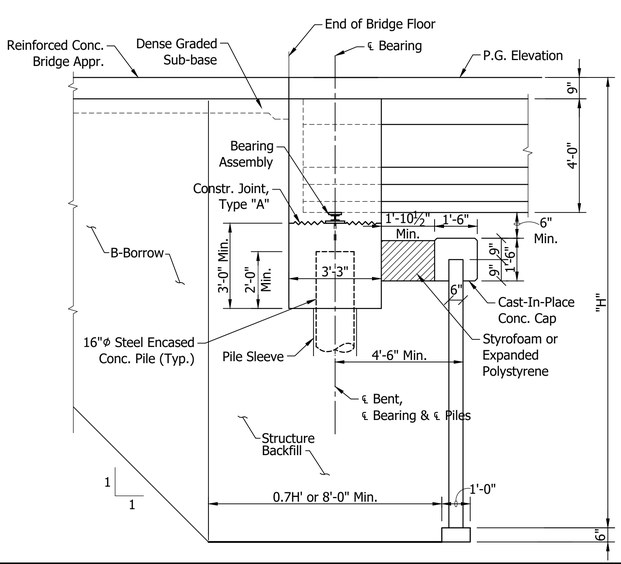

SECTION
MSE WALL NO. 2
Scale: 3/8"=1'-0"

RECOMMENDED FOR APPROVAL: DESIGN ENGINEER DATE	INDIANA DEPARTMENT OF TRANSPORTATION	HORIZONTAL SCALE: As Noted	BRIDGE FILE: I65-111-10603 CD
		VERTICAL SCALE: N/A	DESIGNATION: 1901849
DESIGNED: B. WRIGHT DRAWN: D. PIERCEFIELD	WALL LAYOUT	SURVEY BOOK: ELECTRONIC	SHEET: 14 OF 14
CHECKED: M. EICHENAUER CHECKED: B. WRIGHT		CONTRACT: B-36910	PROJECT: 1600808

BFS NO. 6412

\\bfsn1241\jobs5\641200.0000\ProjDevelopment\Design\Drawings\BRIDGES\01 OVER WASHINGTON STREET\Structure 1901849\1901849_S_BR_WL02.dwg Dylan Piercefield Plot:2/24/2020 1:34 PM Save:2/24/2020 1:34 PM

PROJECT	DESIGNATION
1600808	1901850
CONTRACT	BRIDGE FILE
B-36910	I65-111-10604 NBL

STRUCTURE INFORMATION				
STRUCTURE	TYPE	SPAN & SKEW	OVER	STATION
I65-111-10604 NBL	THREE SIDED PRECAST REINFORCED CONCRETE STRUCTURE	SPAN: 66'-0" SKEW: 0°3'32" LT.	MARKET STREET	121+71.28 LINE "P_ALG_I65-I70"

INDIANA DEPARTMENT OF TRANSPORTATION

BRIDGE PLANS

FOR SPANS OVER 20 FEET

ROUTE: I-65 / I-70 N.B. AT: RP 111+30

PROJECT NO. 1600808 P.E.

1600808 CONST.

NO ADDITIONAL RIGHT OF WAY REQUIRED FOR THIS PROJECT

BRIDGE REPLACEMENT ON I-65 / I-70 N.B. OVER MARKET STREET
LOCATED 1.00 MILES NORTH OF I-70 (SOUTH SPLIT) INTERCHANGE
SECTION 1, TOWNSHIP 15 NORTH, RANGE 3 EAST
CENTER TOWNSHIP, MARION COUNTY INDIANA

END PROJECT No. 1600808
STATION 25+75.00 LINE "P_ALG_I65"

END PROJECT No. 1600808
STATION 41+85.70 LINE "P_ALG_I70"

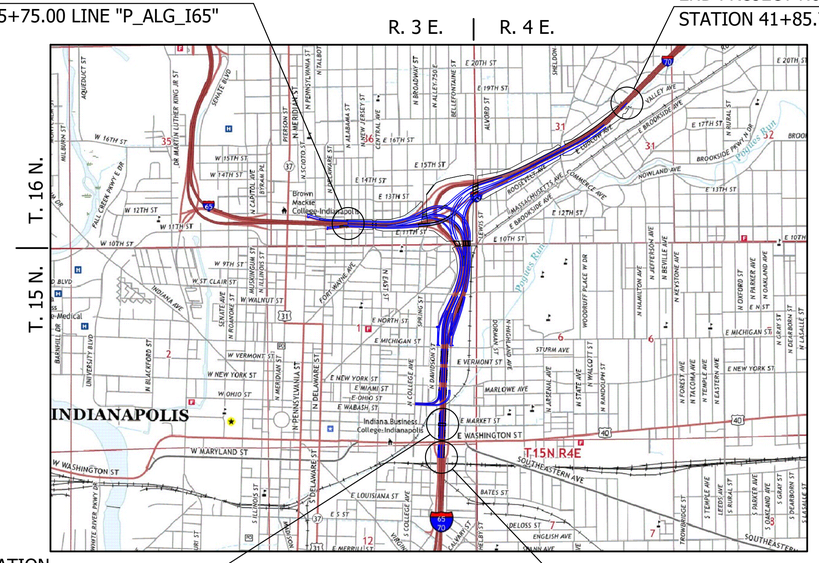

PROJECT LOCATION
BRIDGE FILE No. I65-111-10604 NBL
I-65 / I-70 N.B. OVER MARKET STREET
STA. 121+71.28 LINE "P_ALG_I65-I70"

LOCATION MAP
MARION COUNTY

BEGIN PROJECT No. 1600808
STATION 113+00.00 LINE "P_ALG_I65/I70"

TRAFFIC DATA	I-65 / I-70 N.B.	MARKET STREET
A.D.T. (2021)	62,989 V.P.D.	2,477 V.P.D.
A.D.T. (2041)	76,198 V.P.D.	2,243 V.P.D.
D.H.V. (2041)	6,553 V.P.H.	366 V.P.H.
DIRECTIONAL DISTRIBUTION	100 %	65 %
TRUCKS	9 % D.H.V.	4 % D.H.V.
DESIGN DATA		
DESIGN SPEED	55 M.P.H.	30 M.P.H.
PROJECT DESIGN CRITERIA	4R (FREEWAY)	N/A
FUNCTIONAL CLASSIFICATION	URBAN FREEWAY	MINOR COLLECTOR
RURAL/URBAN	URBAN (BUILT-UP)	URBAN (BUILT-UP)
TERRAIN	LEVEL	LEVEL
ACCESS CONTROL	FULL CONTROL	NONE

PROJECT LOCATION SHOWN BY

SCALE: 1" = 2000'

LATITUDE: 39°46'05" N LONGITUDE: 86°08'36" W

BRIDGE LENGTH :	0.### MI.
ROADWAY LENGTH :	SEE ROAD PLANS
TOTAL LENGTH :	SEE ROAD PLANS
MAX GRADE :	3.15%

HUC: 05120201130020

INDIANA DEPARTMENT OF TRANSPORTATION
STANDARD SPECIFICATIONS DATED 2020 TO
BE USED WITH THESE PLANS.

SUPERIOR CONSTRUCTION

PLANS PREPARED BY: Butler Fairman and Seufert Inc. (317)713-4615 PHONE

CERTIFIED BY: #/#/# DATE

APPROVED FOR LETTING: #/#/# DATE
INDIANA DEPARTMENT OF TRANSPORTATION

BRIDGE FILE		
I65-111-10604 NBL		
DESIGNATION		
1901850		
SURVEY BOOK	SHEET	
ELECTRONIC	1 OF 9	
CONTRACT	PROJECT	
B-36910	1600808	

6412

\\bfsn1241\jobs5\641200.0000\Pro\Development\Design\Drawings\BRIDGES\02 OVER MARKET STREET\Structure 1901850\1901850_S_BR_TTL01.dwg Dylan Piercefield Plot:2/24/2020 5:35 AM Save:2/21/2020 9:13 AM

UTILITIES

REVISIONS

SHEET NO.	DATE	REVISED

KIN PROJECT INFORMATION

DESIGNATION	PROJECT DESCRIPTION	
1600808	COMPLETE ROAD RECONSTRUCTION OF I-65/I-70 FROM WASHINGTON STREET TO I-65 OVER DELAWARE STREET AND I-70 OVER VALLEY AVENUE	LEAD DES
1901935	ITS FOR I-65/I-70 FROM WASHINGTON STREET TO I-65 OVER DELAWARE STREET AND I-70 OVER VALLEY AVENUE	
1901936	SIGNS, LIGHTING, SIGNALS AND MARKING FOR I-65/I-70 FROM WASHINGTON STREET TO I-65 OVER DELAWARE STREET AND I-70 OVER VALLEY AVENUE	
1901847	BRIDGE REPLACEMENT ON I-65/I-70 NB OVER WASHINGTON STREET	
1901848	BRIDGE REPLACEMENT ON I-65/I-70 SB OVER WASHINGTON STREET	
1901849	BRIDGE REPLACEMENT ON I-65/I-70 SB CD OVER WASHINGTON STREET	
1901850	BRIDGE REPLACEMENT ON I-65/I-70 NB OVER MARKET STREET	
1901851	BRIDGE REPLACEMENT ON I-65/I-70 SB OVER MARKET STREET	
1901852	BRIDGE REPLACEMENT ON I-65/I-70 SB CD OVER MARKET STREET	
1901853	BRIDGE REPLACEMENT ON I-65/I-70 NB OVER CSX RAILROAD & OHIO STREET	
1901854	BRIDGE REPLACEMENT ON I-65/I-70 SB OVER CSX RAILROAD & OHIO STREET	
1901855	BRIDGE REPLACEMENT ON I-65/I-70 SB CD OVER CSX RAILROAD & OHIO STREET	
1901856	BRIDGE REPLACEMENT ON I-65/I-70 NB OVER NEW YORK STREET	
1901857	BRIDGE REPLACEMENT ON I-65/I-70 SB OVER NEW YORK STREET	
1901858	BRIDGE REPLACEMENT ON I-65/I-70 SB CD OVER NEW YORK STREET	
1901861	BRIDGE REPLACEMENT ON I-65/I-70 SB CD OVER VERMONT STREET	
1901862	BRIDGE REPLACEMENT ON I-65 NB & I-70 EB OVER MICHIGAN STREET	
1901863	BRIDGE REPLACEMENT ON I-65 SB/I-70 WB OVER MICHIGAN STREET	
1901864	BRIDGE REPLACEMENT ON I-65/I-70 SB CD OVER MICHIGAN STREET	
1901865	BRIDGE REPLACEMENT ON I-65 NB OVER I-70 EB ENTRANCE RAMP	
1901881	BRIDGE REPLACEMENT ON I-65 NB OVER ST. CLAIR STREET	
1901889	NEW BRIDGE CONSTRUCTION ON I-70 EB OVER ST. CLAIR STREET	
1901892	BRIDGE REPLACEMENT ON I-65 SB/I-70 WB OVER ST. CLAIR STREET	
1901896	NEW BRIDGE CONSTRUCTION ON SB CD OVER ST. CLAIR STREET	
1901897	BRIDGE REPLACEMENT ON I-65 NB OVER EAST 10TH STREET	
1901899	NEW BRIDGE CONSTRUCTION ON I-70 EB OVER EAST 10TH STREET	
1901901	BRIDGE REPLACEMENT ON I-65 SB OVER EAST 10TH STREET	
1901903	BRIDGE REPLACEMENT ON I-70 WB OVER EAST 10TH STREET	
1901905	NEW BRIDGE CONSTRUCTION ON SB CD & RAMP OVER EAST 10TH STREET	
1901906	NEW BRIDGE CONSTRUCTION ON I-65 NB CD EXIT RAMP OVER CENTRAL AVENUE	
1901907	BRIDGE REPLACEMENT ON I-65 NB OVER CENTRAL AVENUE	
1901908	BRIDGE REPLACEMENT ON I-65 SB OVER CENTRAL AVENUE	
1901909	NEW BRIDGE CONSTRUCTION ON I-65 SB CD ENTRANCE RAMP OVER CENTRAL AVE.	
1901914	BRIDGE REPLACEMENT ON I-70 WB TO I-65 NB OVER COLLEGE AVENUE	
1901915	BRIDGE REPLACEMENT ON I-65 NB & PENNSYLVANIA EXIT RAMP OVER COLLEGE AVENUE	
1901917	BRIDGE REPLACEMENT ON I-65 SB & SB CD RAMP OVER COLLEGE AVENUE	
1901918	BRIDGE REPLACEMENT ON I-65 SB & DELAWARE ENTRANCE RAMP TO I-70 EB OVER COLLEGE AVENUE & FIVE RAMPS	
1901919	BRIDGE REPLACEMENT ON I-65 NB OVER I-70 WB & RAMP	
1901920	BRIDGE REPLACEMENT ON I-70 WB TO I-65 NB OVER THREE RAMPS	
1901921	BRIDGE REPLACEMENT ON I-65 SB OVER I-70 WB & SB CD RAMP	
1901922	NEW BRIDGE CONSTRUCTION ON I-70 EB OVER I-65 NB	
1901923	BRIDGE REPLACEMENT ON I-70 WB & SB CD OVER LEWIS STREET & MONON TRAIL	
1901925	NEW BRIDGE CONSTRUCTION ON I-70 WB TO I-65 NB OVER LEWIS STREET & MONON TRAIL	
1901927	NOT USED	
1901928	BRIDGE REPLACEMENT ON I-70 EB OVER LEWIS STREET & MONON TRAIL	
1901929	PREVENTATIVE MAINTENANCE ON I-70 WB OVER ROOSEVELT AT COMMERCE AVENUE	
1901930	PREVENTATIVE MAINTENANCE ON I-70 EB OVER ROOSEVELT AT COMMERCE AVENUE	
1901931	PREVENTATIVE MAINTENANCE ON I-70 WB OVER VALLEY AVENUE	
1901932	PREVENTATIVE MAINTENANCE ON I-70 EB OVER VALLEY AVENUE	
1901933	REHABILITATE AND WIDEN ON I-65 OVER 7 STREETS, ACCESS RD, MONORAIL (AKA "MONSTER BRIDGE") - PENNSYLVANIA EXIT RAMP	
1901934	REHABILITATE AND WIDEN ON I-65 OVER 7 STREETS, ACCESS RD, MONORAIL (AKA "MONSTER BRIDGE") - DELAWARE ENTRANCE RAMP	
1902179	BRIDGE REPLACEMENT ON I-65 NB/I70 EB OVER VERMONT STREET	
1902180	BRIDGE REPLACEMENT ON I-65 SB/I70 WB OVER VERMONT STREET	

INDEX

SHEET NO.	DESIGNATION
1	TITLE
2	INDEX
3	MAINTENANCE OF TRAFFIC
4	LAYOUT
5	GENERAL PLAN - PLAN & ELEVATION VIEWS
6	ABUTMENT 1 DETAILS
7	ABUTMENT 2 DETAILS
8	WALL LAYOUT
9	WALL LAYOUT

RECOMMENDED FOR APPROVAL: _____ DESIGN ENGINEER #/#/# DATE

DESIGNED: B. WRIGHT DRAWN: K. COFFMAN

CHECKED: M. EICHENAUER CHECKED: B. WRIGHT

INDIANA
DEPARTMENT OF TRANSPORTATION

INDEX

HORIZONTAL SCALE	BRIDGE FILE
N/A	I65-111-10604 NBL
VERTICAL SCALE	DESIGNATION
N/A	1901850
SURVEY BOOK	SHEET
ELECTRONIC	2 OF 9
CONTRACT	PROJECT
B-36910	1600808

6412

BFS NO.

\\bfsnt241\jobs5\641200.0000\ProjDevelopment\Design\Drawings\BRIDGES\02 OVER MARKET STREET\Structure 1901850\1901850_S_BR_IN001.dwg Dylan Piercefield Plot:2/24/2020 7:00 AM Save:2/24/2020 6:58 AM

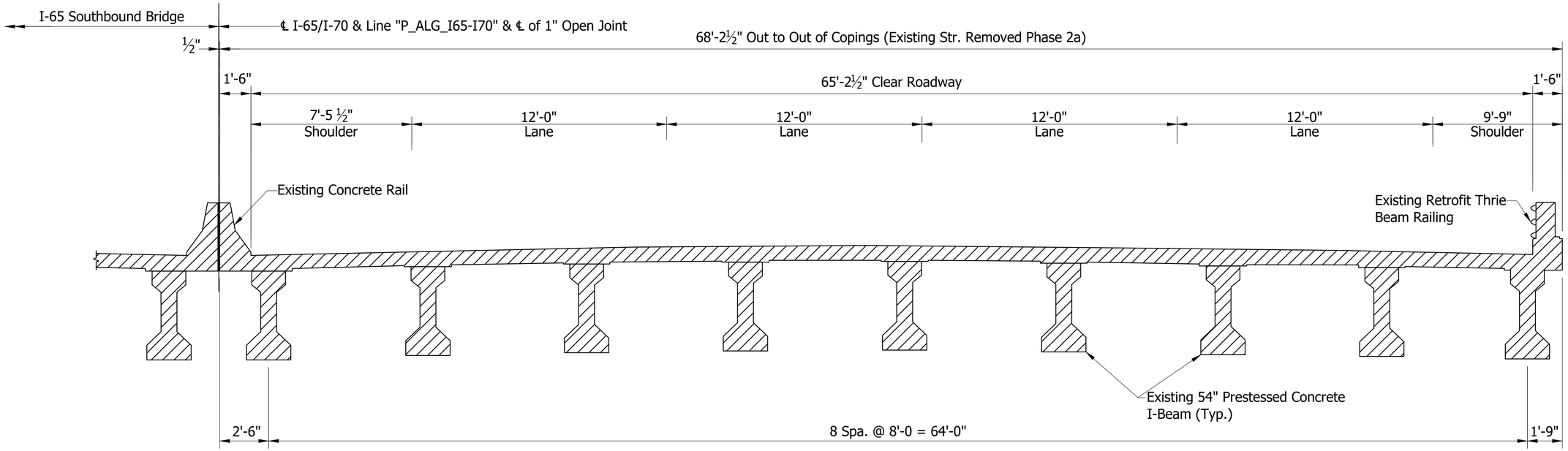

EXISTING NORTHBOUND TYPICAL SECTION

NOT TO SCALE

See Sheet 5 for Phase 2A Construction Details.

RECOMMENDED FOR APPROVAL: _____ DESIGN ENGINEER DATE

DESIGNED: B. WRIGHT DRAWN: K. COFFMAN

CHECKED: M. EICHENAUER CHECKED: B. WRIGHT

INDIANA
DEPARTMENT OF TRANSPORTATION

MAINTENANCE OF TRAFFIC

HORIZONTAL SCALE	BRIDGE FILE
As Noted	I65-111-10604 NBL
VERTICAL SCALE	DESIGNATION
N/A	1901850
SURVEY BOOK	SHEET
ELECTRONIC	3 OF 9
CONTRACT	PROJECT
B-36910	1600808

BFS NO. 6412

\\bfsn1241\Jobs5\641200.0000\ProjDevelopment\Design\Drawings\BRIDGES\02 OVER MARKET STREET\Structure 1901850\1901850_S_BR_M0101.dwg Dylon Piercefield Plot:2/24/2020 5:35 AM Save:2/4/2020 2:53 PM

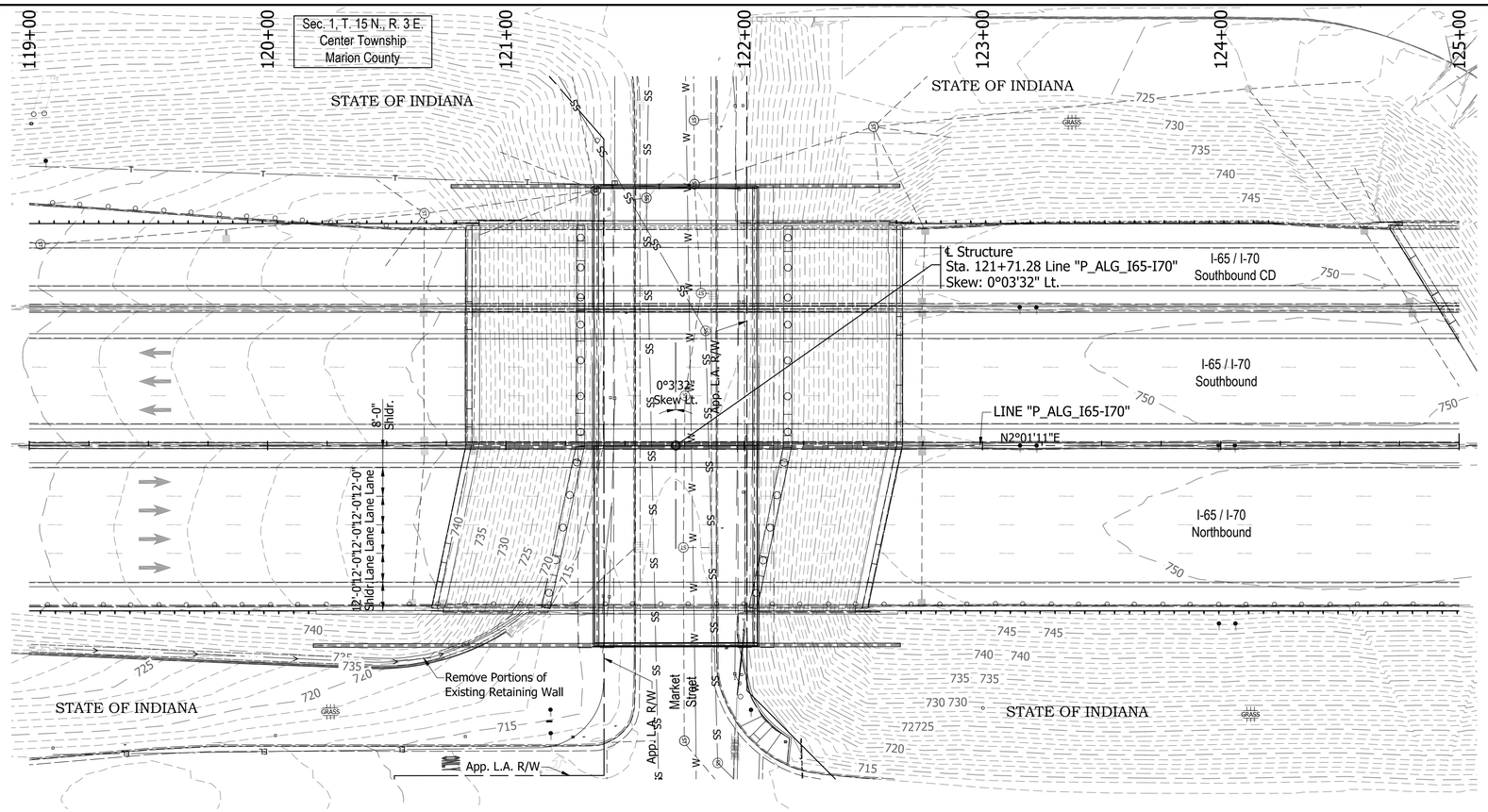

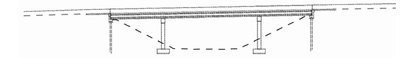

EXISTING STRUCTURE

The existing structure was built in 1974. Structure was rehabilitated in 2003. The structure is a 3-span continuous composite pre-stressed concrete I-beam bridge.

Span lengths: 1 @ 47'-0", 1 @ 87'-1", 1 @ 47'-0"

Clear roadway 65'-2½". Total length of 185'-6 1/8"

Existing structure to be removed.

Existing plans are on file with the Indiana Department of Transportation under Bridge File No. I-65-112-5728 & I-65-112-5728A.

EARTHWORK TABULATION

See Roadway Plans (DES #_____) for earthwork tabulation.

NOTE: ALL TOPOGRAPHY INFORMATION REFERENCED TO LINE "P_ALG_I65-I70" UNLESS NOTED.

ALL R/W ON THIS SHEET DESCRIBED FROM LINE "P_ALG_I65-I70" UNLESS OTHERWISE NOTED

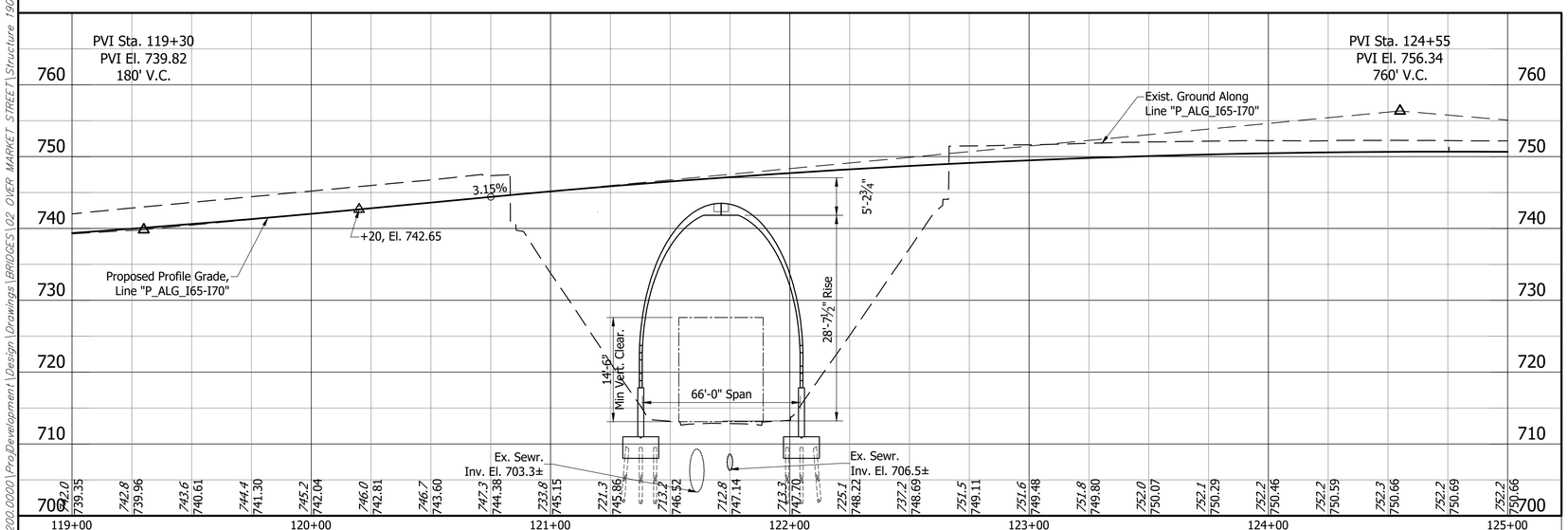

Notes:

1. For R/W and property information, see Location Control Route Survey (DES # _____).
2. For alignment data, see Geometric Layout Sheets (DES #_____).
3. See Road Plans (DES #_____) for Horizontal & Vertical Control Data.°

THREE SIDED PRECAST REINFORCED CONCRETE STRUCTURE
66'-0" CULVERT SPAN x 28'-7 1/2" RISE x 84'-0" LONG
SKEW: 0°3'32" LT.
I-65 / I-70 N.B. OVER MARKET STREET
MARION COUNTY

RECOMMENDED FOR APPROVAL: _____ DESIGN ENGINEER #/#/# DATE

DESIGNED: B. WRIGHT DRAWN: L. KIRSCH
CHECKED: M. EICHENAUER CHECKED: B. WRIGHT

INDIANA
DEPARTMENT OF TRANSPORTATION

LAYOUT

HORIZONTAL SCALE	BRIDGE FILE
1" = 30'	I65-111-10604 NBL
VERTICAL SCALE	DESIGNATION
1" = 10'	1901850
SURVEY BOOK	SHEET
ELECTRONIC	4 OF 9
CONTRACT	PROJECT
B-36910	1600808

BFS NO. 6412

\\bfsn1241\Jobs5\641200.0000\ProjDevelopment\Design\Drawings\BRIDGES\02_OVER MARKET STREET\Structure 1901850\1901850_S_BR_LAY01.dwg Dylan Piercefield Plot:2/24/2020 5:36 AM Save:2/20/2020 3:55 PM

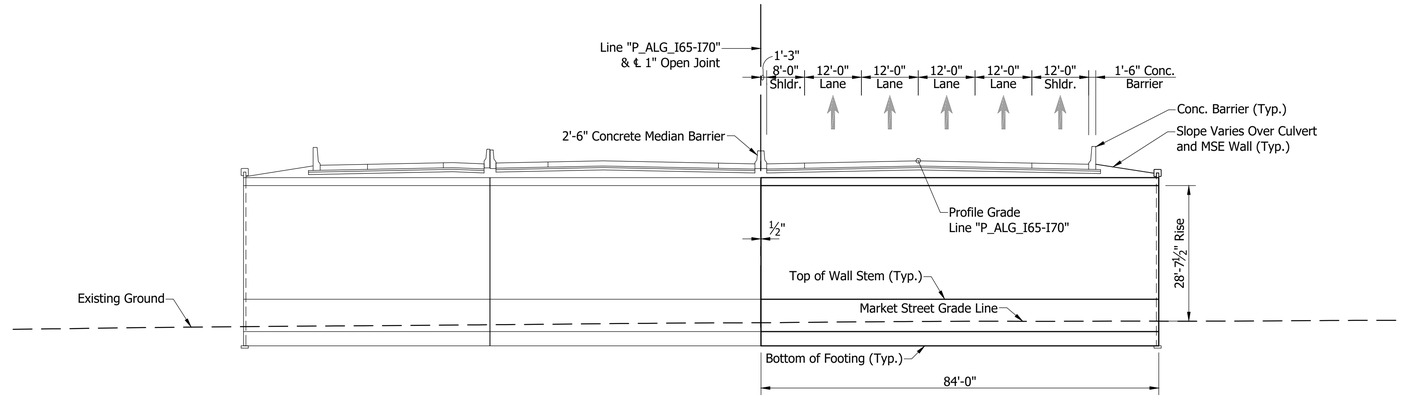

ELEVATION

Scale: 1/16" = 1'-0"

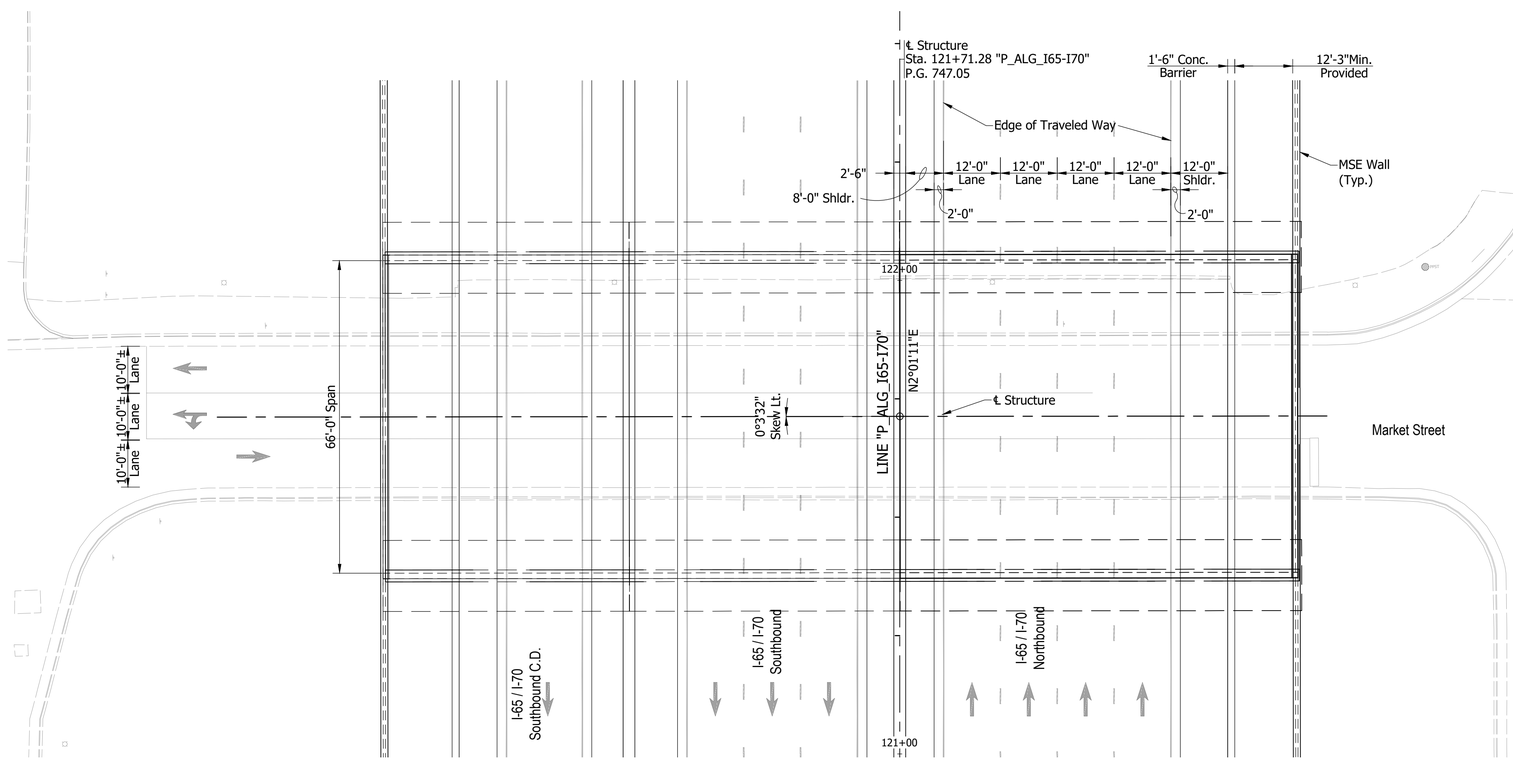

PLAN

Scale: 1/16" = 1'-0"

GENERAL NOTES

Reinforcing bars covering shall be 3" in footings except bottom steel which shall be 4", and 2" in all other parts, unless noted.

All exposed faces of the MSE walls and reinforced concrete bridge approach slabs shall receive surface seal.

See Bridge Aesthetic Plan for Architectural Details.

DESIGN DATA

LIVE LOAD:

Superstructure and Substructure Designed for HL-93 loading in accordance with the AASHTO LRFD Bridge Design Specifications, 8th Edition, 2017 and its subsequent revisions.

DEAD LOAD:

Designed for Actual Dead Load plus 35 psf of future wearing surface.

DESIGN STRESSES

ULTIMATE DESIGN STRENGTHS:

Class "A" Concrete	f'c = 3,500 p.s.i.
Class "B" Concrete	f'c = 3,000 p.s.i.
Reinforcing Steel (Grade 60)	Fy = 60,000 p.s.i. (barrier)
	Fy = 75,000 p.s.i. (all other locations)

SEISMIC DESIGN DATA:

Seismic Site Class	C
PGA (g)	0.051
S_s (g)	0.12
S_1 (g)	0.051
S_{D1} (g)	0.086
Seismic Design Category	A

THREE SIDED PRECAST REINFORCED CONCRETE STRUCTURE
66'-0" CULVERT SPAN x 28'-7 1/2" RISE x 84'-0" LONG
SKEW: 0°3'32" LT.
I-65 / I-70 N.B. OVER MARKET STREET
MARION COUNTY

RECOMMENDED FOR APPROVAL: _____ DESIGN ENGINEER _____ DATE

DESIGNED: B. WRIGHT DRAWN: L. KIRSCH
CHECKED: M. EICHENAUER CHECKED: B. WRIGHT

INDIANA
DEPARTMENT OF TRANSPORTATION

GENERAL PLAN - PLAN & ELEVATION VIEWS

HORIZONTAL SCALE	BRIDGE FILE
As Noted	I65-111-10604 NBL
VERTICAL SCALE	DESIGNATION
N/A	1901850
SURVEY BOOK	SHEET
ELECTRONIC	5 OF 9
CONTRACT	PROJECT
B-36910	1600808

BFS NO. 6412

\\bfsn1241\Jobs5\641200.0000\ProjDevelopment\Design\Drawings\BRIDGES\02 OVER MARKET STREET\Structure 1901850\1901850_S_BR_PLN01.dwg Dylan Piercefield Plot:2/24/2020 5:36 AM Save:2/20/2020 10:05 AM

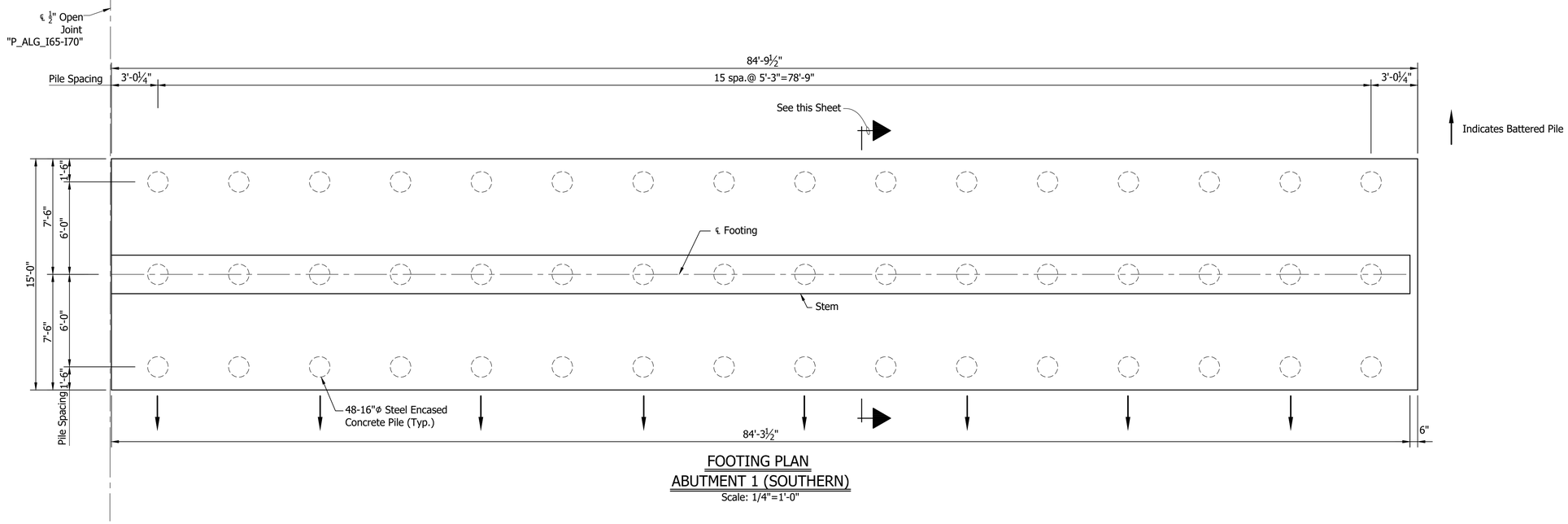

FOOTING PLAN
ABUTMENT 1 (SOUTHERN)
Scale: 1/4"=1'-0"

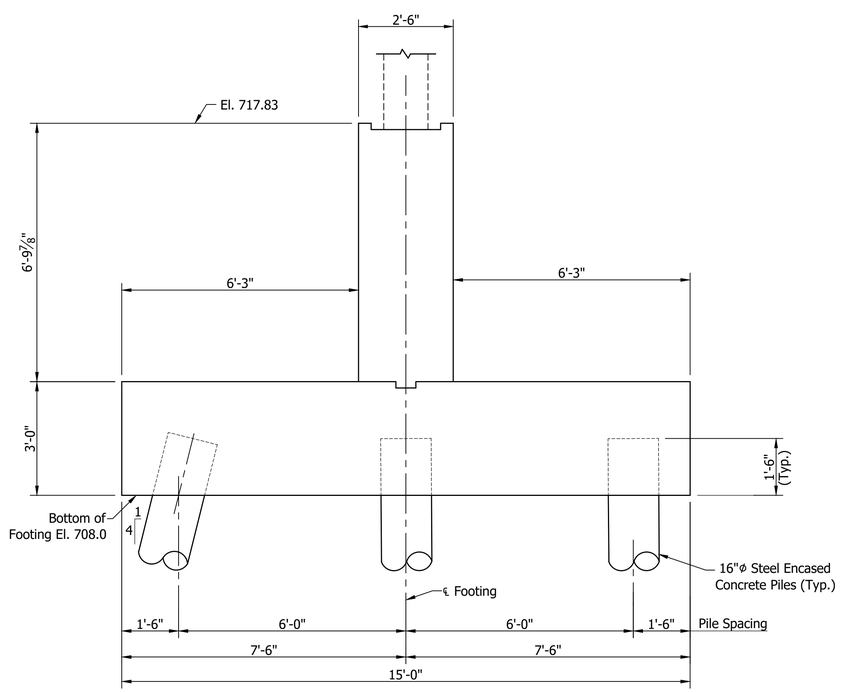

SECTION
Scale: 1/2"=1'-0"

RECOMMENDED FOR APPROVAL: DESIGN ENGINEER DATE	INDIANA DEPARTMENT OF TRANSPORTATION	HORIZONTAL SCALE: As Noted	BRIDGE FILE: I65-111-10604 NBL	6412
		VERTICAL SCALE: N/A	DESIGNATION: 1901850	
DESIGNED: B. WRIGHT DRAWN: D. SHEETZ	ABUTMENT 1 DETAILS	SURVEY BOOK: ELECTRONIC	SHEET: 6 OF 9	BFS NO.
CHECKED: V. SATHIRAJU CHECKED: B. WRIGHT		CONTRACT: B-36910	PROJECT: 1600808	

\\bfsnt241\jobs5\641200.0000\ProDevelopment\Design\Drawings\BRIDGES\02 OVER MARKET STREET\Structure 1901850\1901850_S_BR_BNT01.dwg Dylan Piercefield Plot:2/24/2020 11:08 AM Save:2/24/2020 11:08 AM

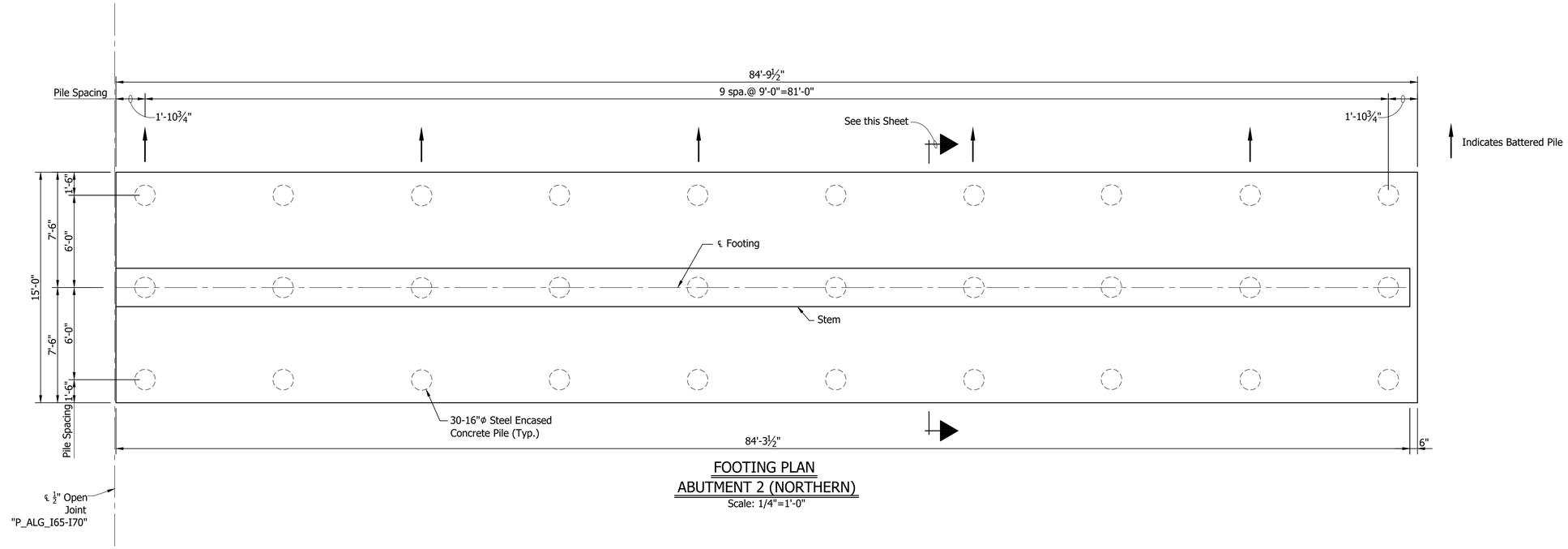

FOOTING PLAN
ABUTMENT 2 (NORTHERN)
Scale: 1/4"=1'-0"

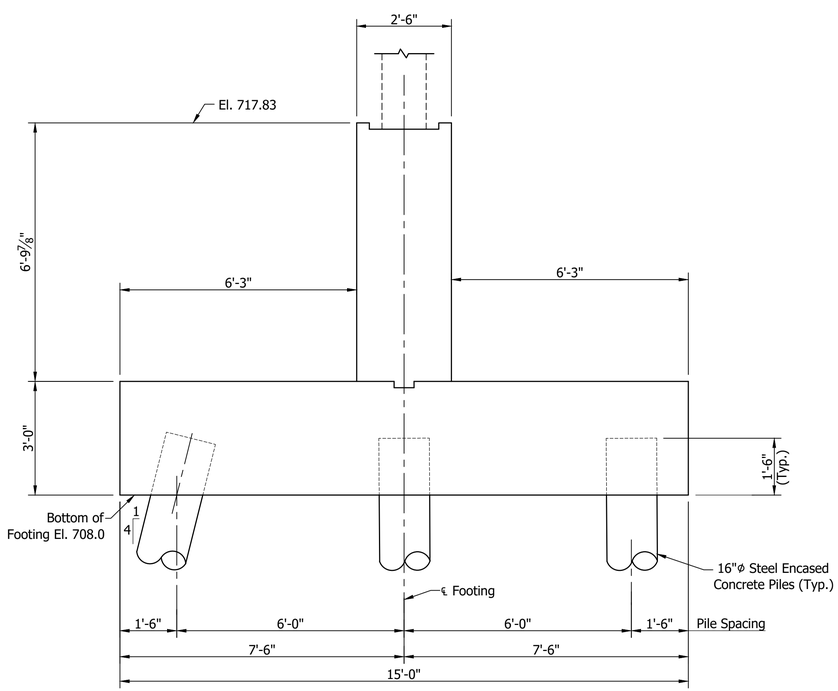

SECTION
Scale: 1/2"=1'-0"

RECOMMENDED FOR APPROVAL: DESIGN ENGINEER DATE	INDIANA DEPARTMENT OF TRANSPORTATION	HORIZONTAL SCALE: As Noted	BRIDGE FILE: I65-111-10604 NBL	6412
		VERTICAL SCALE: N/A	DESIGNATION: 1901850	
DESIGNED: B. WRIGHT DRAWN: D. SHEETZ	ABUTMENT 2 DETAILS	SURVEY BOOK: ELECTRONIC	SHEET: 7 OF 9	BFS NO.
CHECKED: V. SATHIRAJU CHECKED: B. WRIGHT		CONTRACT: B-36910	PROJECT: 1600808	

\\bfsnt241\jobs5\641200.0000\ProDevelopment\Design\Drawings\BRIDGES\02_OVER_MARKET_STREET\Structure_1901850\1901850_S_BR_BNT02.dwg Dylan Piercefield Plot:2/24/2020 5:36 AM Save:2/20/2020 2:43 PM

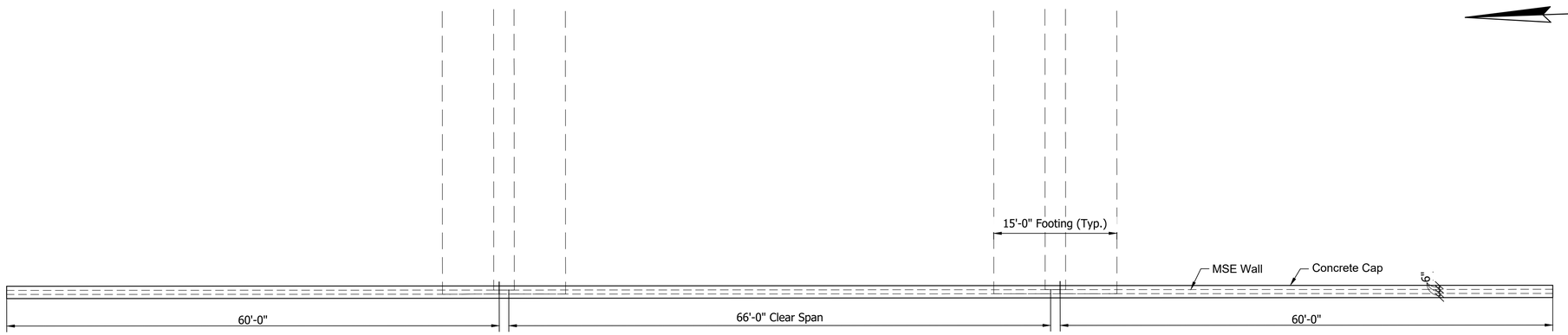

PLAN
WEST WALL
Scale: 1/8"=1'-0"

This Sheet is For Information Only.

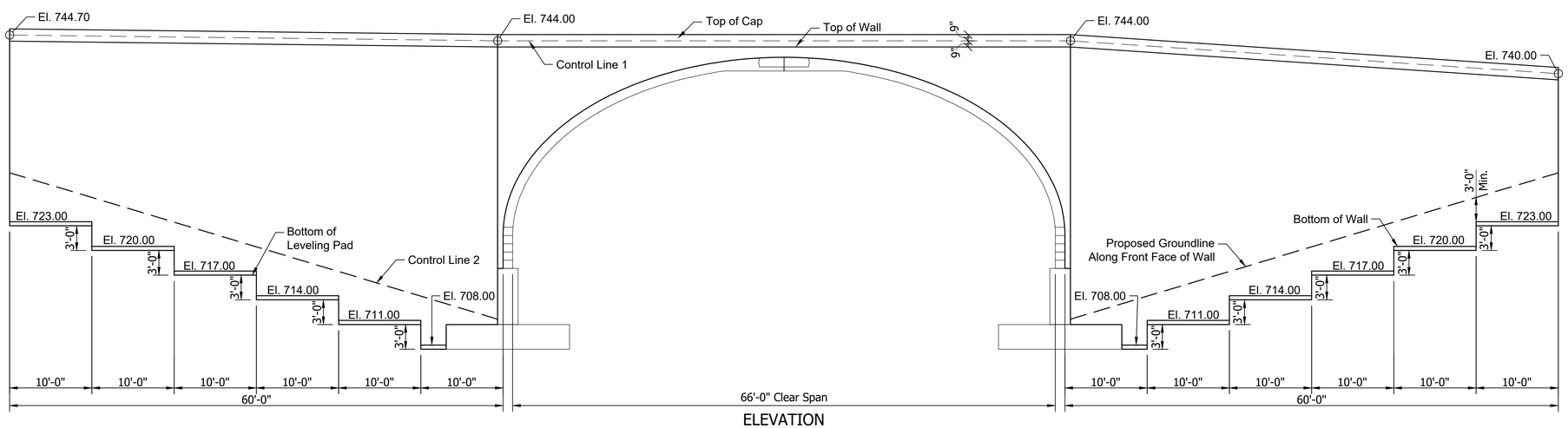

ELEVATION
WEST WALL
Scale: 1/8"=1'-0"

	RECOMMENDED FOR APPROVAL: DESIGN ENGINEER DATE	INDIANA DEPARTMENT OF TRANSPORTATION	HORIZONTAL SCALE: As Noted	BRIDGE FILE: I65-111-10604 NBL
			VERTICAL SCALE: N/A	DESIGNATION: 1901850
	DESIGNED: B. WRIGHT DRAWN: D. PIERCEFIELD	WALL LAYOUT	SURVEY BOOK: ELECTRONIC	SHEET: 8 OF 9
	CHECKED: M. EICHENAUER CHECKED: B. WRIGHT		CONTRACT: B-36910	PROJECT: 1600808

6412

BFS NO.

\\bfsn1241\jobs5\641200.0000\Proj\Development\Design\Drawings\BRIDGES\02 OVER MARKET STREET\Structure 1901850\1901850_S_BR_WL01.dwg Dylan Piercefield Plot-2/24/2020 5:36 AM Save-2/20/2020 2:45 PM

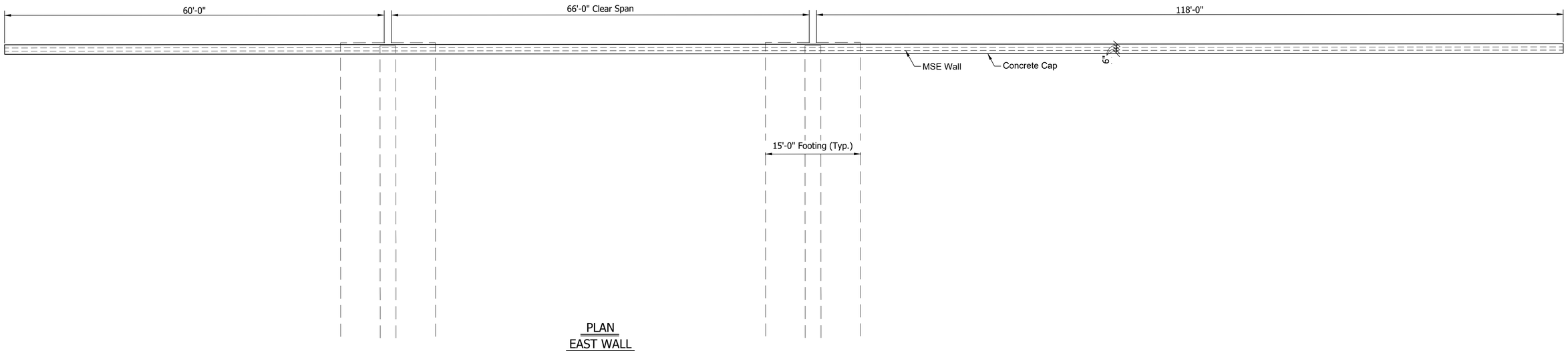

PLAN
EAST WALL
Scale: 1/8"=1'-0"

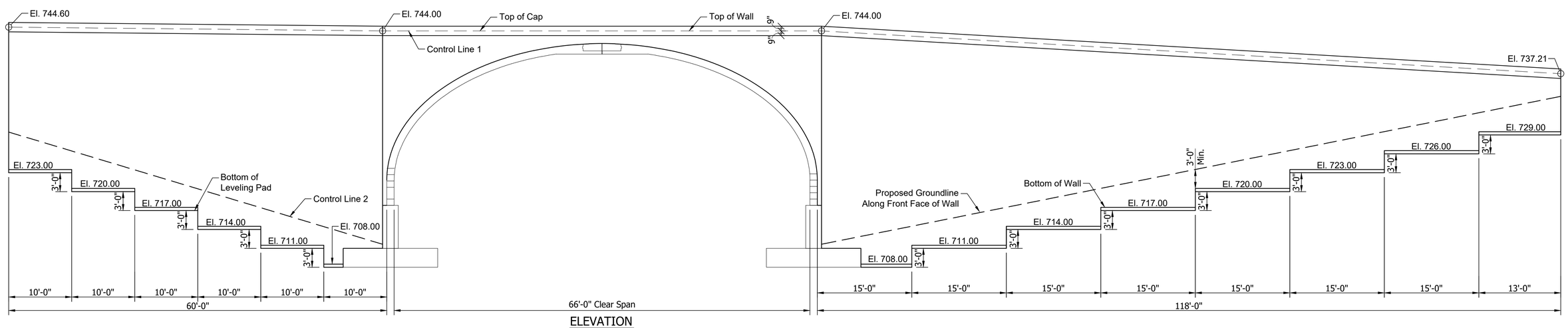

ELEVATION
EAST WALL
Scale: 1/8"=1'-0"

RECOMMENDED FOR APPROVAL: DESIGN ENGINEER DATE	INDIANA DEPARTMENT OF TRANSPORTATION	HORIZONTAL SCALE: As Noted	BRIDGE FILE: I65-111-10604 NBL
		VERTICAL SCALE: N/A	DESIGNATION: 1901850
DESIGNED: B. WRIGHT DRAWN: D. PIERCEFIELD	WALL LAYOUT	SURVEY BOOK: ELECTRONIC	SHEET: 9 OF 9
CHECKED: M. EICHENAUER CHECKED: B. WRIGHT		CONTRACT: B-36910	PROJECT: 1600808

6412

BFS NO.

\\bfsn1241\jobs5\641200.0000\Proj\Development\Design\Drawings\BRIDGES\02 OVER MARKET STREET\Structure 1901850\1901850_S_BR_WL02.dwg Dylan Piercefield Plot:2/24/2020 5:36 AM Save:2/20/2020 2:46 PM

PROJECT	DESIGNATION
1600808	1901851
CONTRACT	BRIDGE FILE
B-36910	I65-111-10605 SBL

STRUCTURE INFORMATION				
STRUCTURE	TYPE	SPAN & SKEW	OVER	STATION
I65-111-10605 SBL	THREE SIDED PRECAST REINFORCED CONCRETE STRUCTURE	SPAN: 66'-0" SKEW: 0°3'32" LT.	MARKET STREET	121+71.28 LINE "P_ALG_I65-I70"

INDIANA DEPARTMENT OF TRANSPORTATION

BRIDGE PLANS

FOR SPANS OVER 20 FEET

ROUTE: I-65 / I-70 S.B. AT: RP 111+30

PROJECT NO. 1600808 P.E.

1600808 CONST.

NO ADDITIONAL RIGHT OF WAY REQUIRED FOR THIS PROJECT

BRIDGE REPLACEMENT ON I-65 / I-70 S.B. OVER MARKET STREET
LOCATED 1.00 MILES NORTH OF I-70 (SOUTH SPLIT) INTERCHANGE
SECTION 1, TOWNSHIP 15 NORTH, RANGE 3 EAST
CENTER TOWNSHIP, MARION COUNTY INDIANA

END PROJECT No. 1600808
STATION 25+75.00 LINE "P_ALG_I65"

END PROJECT No. 1600808
STATION 41+85.70 LINE "P_ALG_I70"

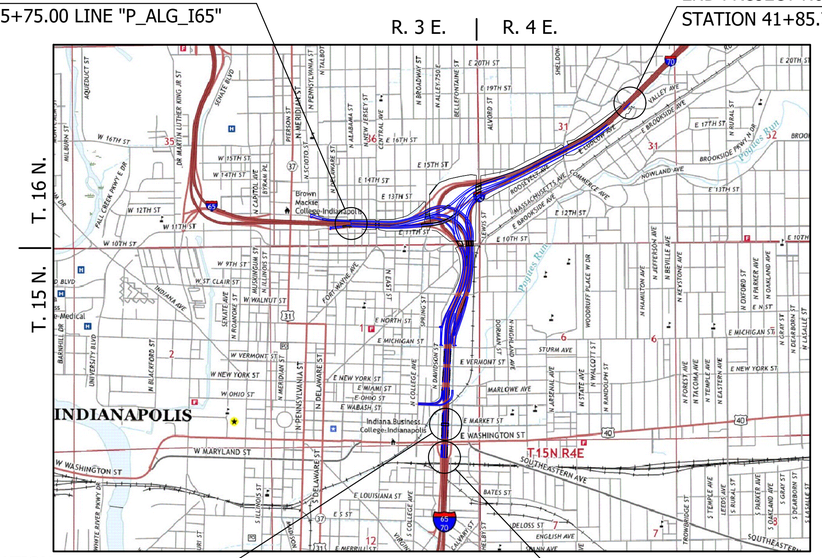

PROJECT LOCATION
BRIDGE FILE No. I65-111-10605 SBL
I-65 / I-70 S.B. OVER MARKET STREET
STA. 121+71.28 LINE "P_ALG_I65-I70"

LOCATION MAP
MARION COUNTY

BEGIN PROJECT No. 1600808
STATION 113+00.00 LINE "P_ALG_I65/I70"

SCALE: 1" = 2000'

TRAFFIC DATA	I-65 / I-70 S.B.	MARKET STREET
A.D.T. (2021)	58,288 V.P.D.	2,477 V.P.D.
A.D.T. (2041)	64,063 V.P.D.	2,243 V.P.D.
D.H.V. (2041)	5,125 V.P.H.	366 V.P.H.
DIRECTIONAL DISTRIBUTION	100 %	65 %
TRUCKS	10 % D.H.V.	4 % D.H.V.
DESIGN DATA		
DESIGN SPEED	55 M.P.H.	30 M.P.H.
PROJECT DESIGN CRITERIA	4R (FREEWAY)	N/A
FUNCTIONAL CLASSIFICATION	URBAN FREEWAY	MINOR COLLECTOR
RURAL/URBAN	URBAN (BUILT-UP)	URBAN (BUILT-UP)
TERRAIN	LEVEL	LEVEL
ACCESS CONTROL	FULL CONTROL	NONE

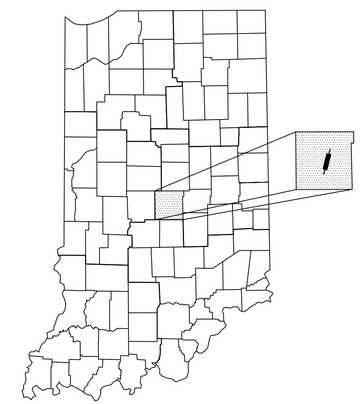

PROJECT LOCATION SHOWN BY

LATITUDE: 39°46'05" N LONGITUDE: 86°08'36" W

BRIDGE LENGTH :	#.### MI.
ROADWAY LENGTH :	SEE ROAD PLANS
TOTAL LENGTH :	SEE ROAD PLANS
MAX GRADE :	3.15%

HUC: 05120201130020

INDIANA DEPARTMENT OF TRANSPORTATION
STANDARD SPECIFICATIONS DATED 2020 TO
BE USED WITH THESE PLANS.

SUPERIOR CONSTRUCTION

PLANS PREPARED BY: Butler Fairman and Seufert Inc. (317)713-4615 PHONE

CERTIFIED BY: . DATE

APPROVED FOR LETTING: . INDIANA DEPARTMENT OF TRANSPORTATION DATE

BRIDGE FILE	
I65-111-10605 SBL	
DESIGNATION	
1901851	
SURVEY BOOK	SHEET
ELECTRONIC	1 OF 9
CONTRACT	PROJECT
B-36910	1600808

6412

\\bfsn1241\Jobs5\641200.0000\ProDevelopment\Design\Drawings\BRIDGES\02 OVER MARKET STREET\Structure 1901851\1901851_S_BR_TTL01.dwg Dylan Piercefield Plot:2/24/2020 5:37 AM Save:2/21/2020 9:14 AM

UTILITIES

REVISIONS

SHEET NO.	DATE	REVISED

KIN PROJECT INFORMATION

DESIGNATION	PROJECT DESCRIPTION	
1600808	COMPLETE ROAD RECONSTRUCTION OF I-65/I-70 FROM WASHINGTON STREET TO I-65 OVER DELAWARE STREET AND I-70 OVER VALLEY AVENUE	LEAD DES
1901935	ITS FOR I-65/I-70 FROM WASHINGTON STREET TO I-65 OVER DELAWARE STREET AND I-70 OVER VALLEY AVENUE	
1901936	SIGNS, LIGHTING, SIGNALS AND MARKING FOR I-65/I-70 FROM WASHINGTON STREET TO I-65 OVER DELAWARE STREET AND I-70 OVER VALLEY AVENUE	
1901847	BRIDGE REPLACEMENT ON I-65/I-70 NB OVER WASHINGTON STREET	
1901848	BRIDGE REPLACEMENT ON I-65/I-70 SB OVER WASHINGTON STREET	
1901849	BRIDGE REPLACEMENT ON I-65/I-70 SB CD OVER WASHINGTON STREET	
1901850	BRIDGE REPLACEMENT ON I-65/I-70 NB OVER MARKET STREET	
1901851	BRIDGE REPLACEMENT ON I-65/I-70 SB OVER MARKET STREET	
1901852	BRIDGE REPLACEMENT ON I-65/I-70 SB CD OVER MARKET STREET	
1901853	BRIDGE REPLACEMENT ON I-65/I-70 NB OVER CSX RAILROAD & OHIO STREET	
1901854	BRIDGE REPLACEMENT ON I-65/I-70 SB OVER CSX RAILROAD & OHIO STREET	
1901855	BRIDGE REPLACEMENT ON I-65/I-70 SB CD OVER CSX RAILROAD & OHIO STREET	
1901856	BRIDGE REPLACEMENT ON I-65/I-70 NB OVER NEW YORK STREET	
1901857	BRIDGE REPLACEMENT ON I-65/I-70 SB OVER NEW YORK STREET	
1901858	BRIDGE REPLACEMENT ON I-65/I-70 SB CD OVER NEW YORK STREET	
1901861	BRIDGE REPLACEMENT ON I-65/I-70 SB CD OVER VERMONT STREET	
1901862	BRIDGE REPLACEMENT ON I-65 NB & I-70 EB OVER MICHIGAN STREET	
1901863	BRIDGE REPLACEMENT ON I-65 SB/I-70 WB OVER MICHIGAN STREET	
1901864	BRIDGE REPLACEMENT ON I-65/I-70 SB CD OVER MICHIGAN STREET	
1901865	BRIDGE REPLACEMENT ON I-65 NB OVER I-70 EB ENTRANCE RAMP	
1901881	BRIDGE REPLACEMENT ON I-65 NB OVER ST. CLAIR STREET	
1901889	NEW BRIDGE CONSTRUCTION ON I-70 EB OVER ST. CLAIR STREET	
1901892	BRIDGE REPLACEMENT ON I-65 SB/I-70 WB OVER ST. CLAIR STREET	
1901896	NEW BRIDGE CONSTRUCTION ON SB CD OVER ST. CLAIR STREET	
1901897	BRIDGE REPLACEMENT ON I-65 NB OVER EAST 10TH STREET	
1901899	NEW BRIDGE CONSTRUCTION ON I-70 EB OVER EAST 10TH STREET	
1901901	BRIDGE REPLACEMENT ON I-65 SB OVER EAST 10TH STREET	
1901903	BRIDGE REPLACEMENT ON I-70 WB OVER EAST 10TH STREET	
1901905	NEW BRIDGE CONSTRUCTION ON SB CD & RAMP OVER EAST 10TH STREET	
1901906	NEW BRIDGE CONSTRUCTION ON I-65 NB CD EXIT RAMP OVER CENTRAL AVENUE	
1901907	BRIDGE REPLACEMENT ON I-65 NB OVER CENTRAL AVENUE	
1901908	BRIDGE REPLACEMENT ON I-65 SB OVER CENTRAL AVENUE	
1901909	NEW BRIDGE CONSTRUCTION ON I-65 SB CD ENTRANCE RAMP OVER CENTRAL AVE.	
1901914	BRIDGE REPLACEMENT ON I-70 WB TO I-65 NB OVER COLLEGE AVENUE	
1901915	BRIDGE REPLACEMENT ON I-65 NB & PENNSYLVANIA EXIT RAMP OVER COLLEGE AVENUE	
1901917	BRIDGE REPLACEMENT ON I-65 SB & SB CD RAMP OVER COLLEGE AVENUE	
1901918	BRIDGE REPLACEMENT ON I-65 SB & DELAWARE ENTRANCE RAMP TO I-70 EB OVER COLLEGE AVENUE & FIVE RAMPS	
1901919	BRIDGE REPLACEMENT ON I-65 NB OVER I-70 WB & RAMP	
1901920	BRIDGE REPLACEMENT ON I-70 WB TO I-65 NB OVER THREE RAMPS	
1901921	BRIDGE REPLACEMENT ON I-65 SB OVER I-70 WB & SB CD RAMP	
1901922	NEW BRIDGE CONSTRUCTION ON I-70 EB OVER I-65 NB	
1901923	BRIDGE REPLACEMENT ON I-70 WB & SB CD OVER LEWIS STREET & MONON TRAIL	
1901925	NEW BRIDGE CONSTRUCTION ON I-70 WB TO I-65 NB OVER LEWIS STREET & MONON TRAIL	
1901927	NOT USED	
1901928	BRIDGE REPLACEMENT ON I-70 EB OVER LEWIS STREET & MONON TRAIL	
1901929	PREVENTATIVE MAINTENANCE ON I-70 WB OVER ROOSEVELT AT COMMERCE AVENUE	
1901930	PREVENTATIVE MAINTENANCE ON I-70 EB OVER ROOSEVELT AT COMMERCE AVENUE	
1901931	PREVENTATIVE MAINTENANCE ON I-70 WB OVER VALLEY AVENUE	
1901932	PREVENTATIVE MAINTENANCE ON I-70 EB OVER VALLEY AVENUE	
1901933	REHABILITATE AND WIDEN ON I-65 OVER 7 STREETS, ACCESS RD, MONORAIL (AKA "MONSTER BRIDGE") - PENNSYLVANIA EXIT RAMP	
1901934	REHABILITATE AND WIDEN ON I-65 OVER 7 STREETS, ACCESS RD, MONORAIL (AKA "MONSTER BRIDGE") - DELAWARE ENTRANCE RAMP	
1902179	BRIDGE REPLACEMENT ON I-65 NB/I70 EB OVER VERMONT STREET	
1902180	BRIDGE REPLACEMENT ON I-65 SB/I70 WB OVER VERMONT STREET	

INDEX

SHEET NO.	DESIGNATION
1	TITLE
2	INDEX
3	MAINTENANCE OF TRAFFIC
4	LAYOUT
5	GENERAL PLAN - PLAN & ELEVATION VIEWS
6	ABUTMENT 1 DETAILS
7	ABUTMENT 2 DETAILS
8	WALL LAYOUT
9	WALL LAYOUT

RECOMMENDED FOR APPROVAL: _____ DESIGN ENGINEER _____ DATE

DESIGNED: B. WRIGHT DRAWN: K. COFFMAN

CHECKED: M. EICHENAUER CHECKED: B. WRIGHT

INDIANA
DEPARTMENT OF TRANSPORTATION

INDEX

HORIZONTAL SCALE	BRIDGE FILE
N/A	I65-111-10605 SBL
VERTICAL SCALE	DESIGNATION
N/A	1901851
SURVEY BOOK	SHEET
ELECTRONIC	2 OF 9
CONTRACT	PROJECT
B-36910	1600808

BFS NO. 6412

\\bfsn1241\jobs5\641200.0000\Proj.Development\Design\Drawings\BRIDGES\02 OVER MARKET STREET\Structure 1901851\1901851_S_BR_IN001.dwg Dylan Piercefield Plot: 2/24/2020 7:03 AM Save: 2/24/2020 7:03 AM

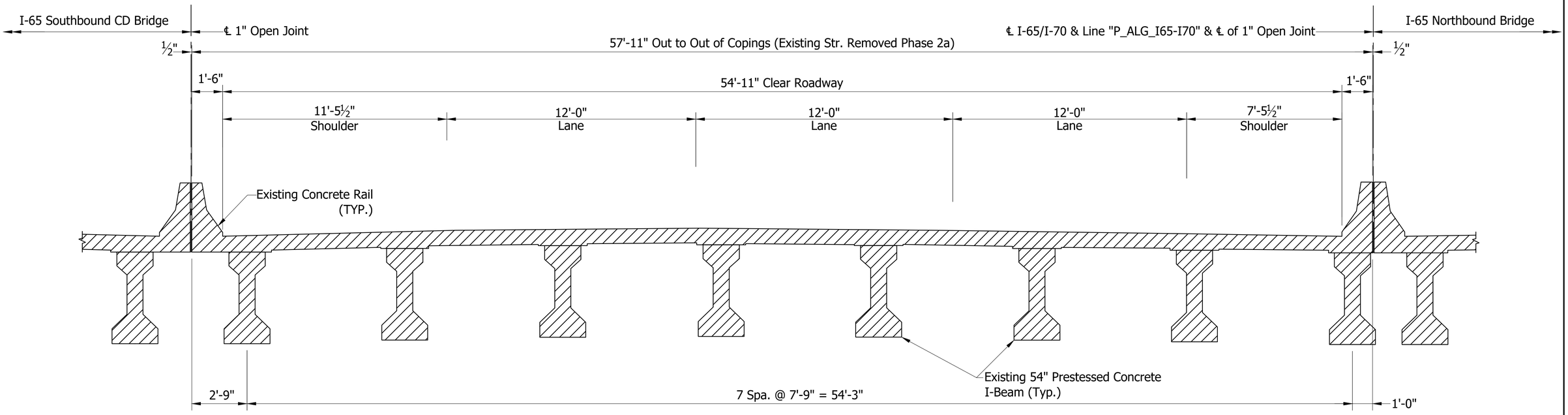

EXISTING SOUTHBOUND TYPICAL SECTION

NOT TO SCALE

See Sheet 5 for Phase 2A Construction Details.

RECOMMENDED FOR APPROVAL: DESIGN ENGINEER DATE	INDIANA DEPARTMENT OF TRANSPORTATION	HORIZONTAL SCALE: As Noted	BRIDGE FILE: I65-111-10605 SBL	
		VERTICAL SCALE: N/A	DESIGNATION: 1901851	
DESIGNED: B. WRIGHT DRAWN: K. COFFMAN	MAINTENANCE OF TRAFFIC	SURVEY BOOK: ELECTRONIC	SHEET: 3 OF 9	6412
CHECKED: M. EICHENAUER CHECKED: B. WRIGHT		CONTRACT: B-36910	PROJECT: 1600808	BFS NO.

\\bfsn1241\Jobs5\641200.0000\ProjDevelopment\Design\Drawings\BRIDGES\02 OVER MARKET STREET\Structure 1901851\1901851_S_BR_MOT01.dwg Dylan Fiercefield Plot:2/24/2020 5:37 AM Save:2/4/2020 2:58 PM

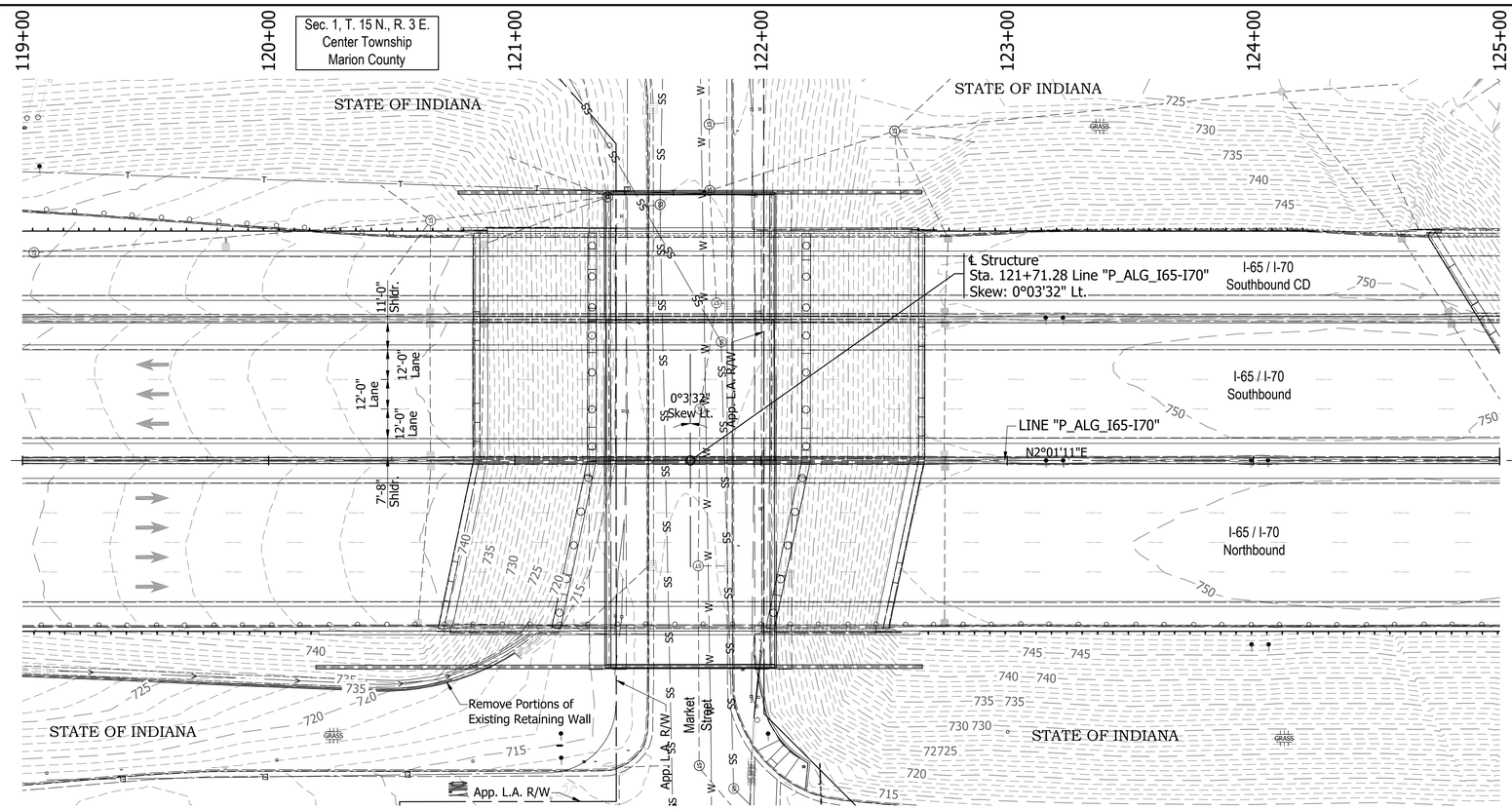

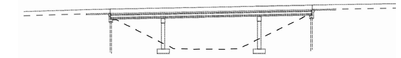

EXISTING STRUCTURE

The existing structure was built in 1974. Structure was rehabilitated in 2003. The structure is a 3-span continuous composite pre-stressed concrete I-beam bridge.

Span lengths: 1 @ 47'-0", 1 @ 87'-1", 1 @ 47'-0"

Clear roadway54'-11". Total length of 185'-6 1/8"

Existing structure to be removed.

Existing plans are on file with the Indiana Department of Transportation under Bridge File No. I-65-112-5728 & I-65-112-5728A.

EARTHWORK TABULATION

See Roadway Plans (DES #_____) for earthwork tabulation.

NOTE: ALL TOPOGRAPHY INFORMATION REFERENCED TO LINE "P_ALG_I65-I70" UNLESS NOTED.

ALL R/W ON THIS SHEET DESCRIBED FROM LINE "P_ALG_I65-I70" UNLESS OTHERWISE NOTED

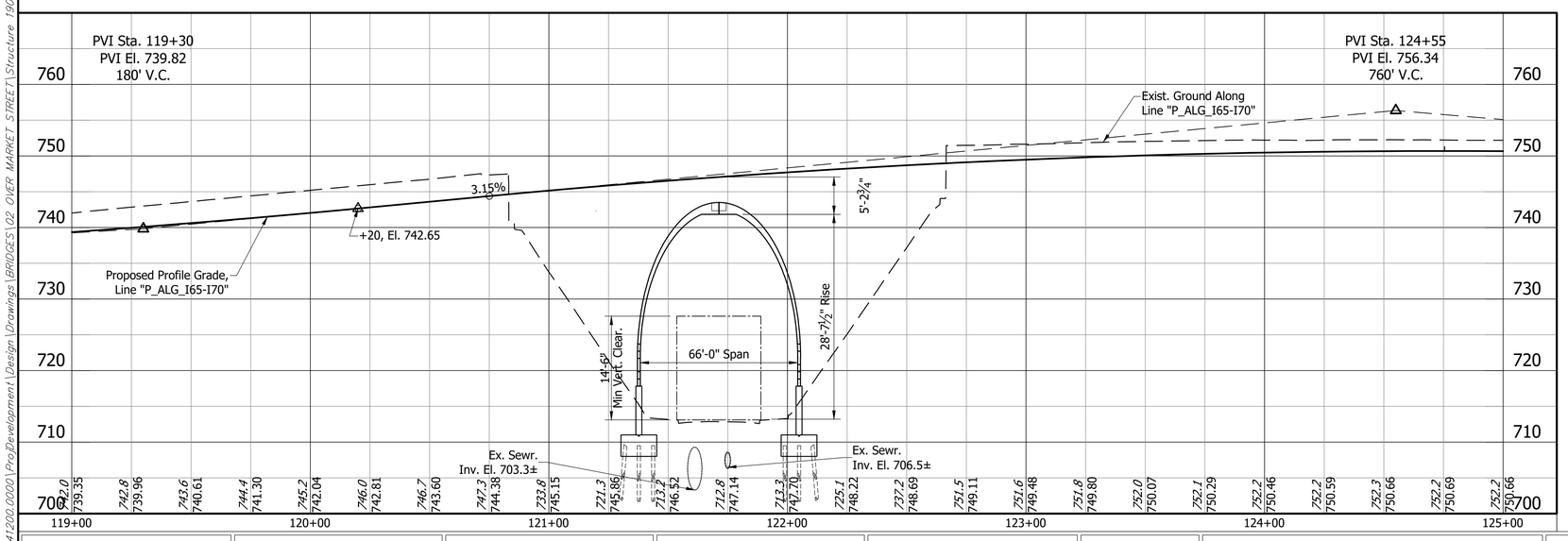

Notes:

1. For R/W and property information, see Location Control Route Survey (DES # _____).
2. For alignment data, see Geometric Layout Sheets (DES #_____).
3. See Road Plans (DES #_____) for Horizontal & Vertical Control Data.°

THREE SIDED PRECAST REINFORCED CONCRETE STRUCTURE
66'-0" CULVERT SPAN x 28'-7 1/2" RISE x 57'-1 3/8" LONG
SKEW: 0°3'32" LT.
I-65 / I-70 S.B. OVER MARKET STREET
MARION COUNTY

RECOMMENDED FOR APPROVAL: _____ DESIGN ENGINEER _____ DATE

DESIGNED: B. WRIGHT DRAWN: L. KIRSCH
CHECKED: M. EICHENAUER CHECKED: B. WRIGHT

INDIANA
DEPARTMENT OF TRANSPORTATION

LAYOUT

HORIZONTAL SCALE	BRIDGE FILE
1" = 30'	I65-111-10605 SBL
VERTICAL SCALE	DESIGNATION
1" = 10'	1901851
SURVEY BOOK	SHEET
ELECTRONIC	4 OF 9
CONTRACT	PROJECT
B-36910	1600808

BFS NO. 6412

\\bfsn1241\Jobs5\641200.0000\ProjDevelopment\Design\Drawings\BRIDGES\02_OVER MARKET STREET\Structure 1901851\1901851_S_BR_LAY01.dwg Dylan Piercefield Plot:2/24/2020 5:38 AM Save:2/17/2020 2:37 PM

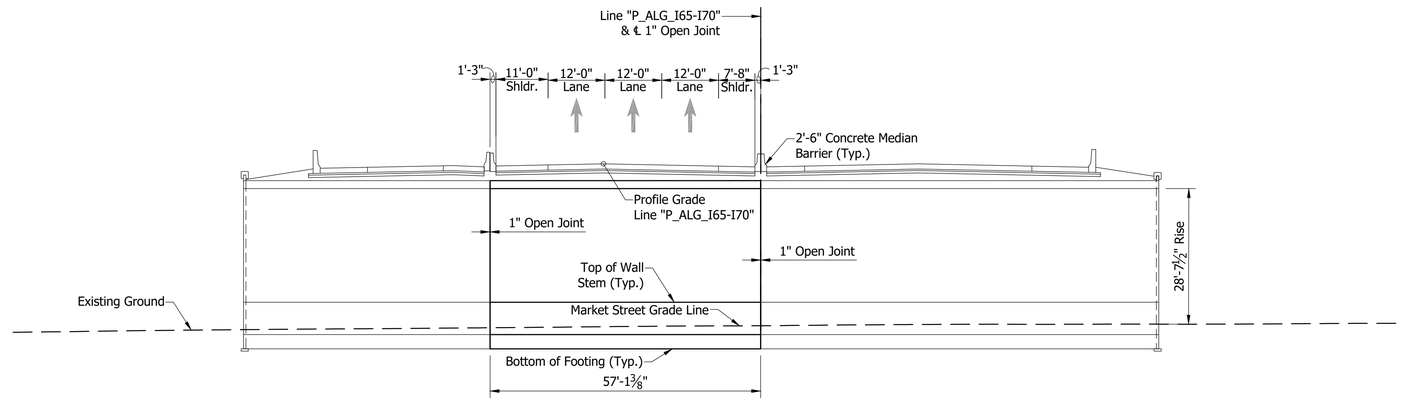

ELEVATION

Scale: 1/16" = 1'-0"

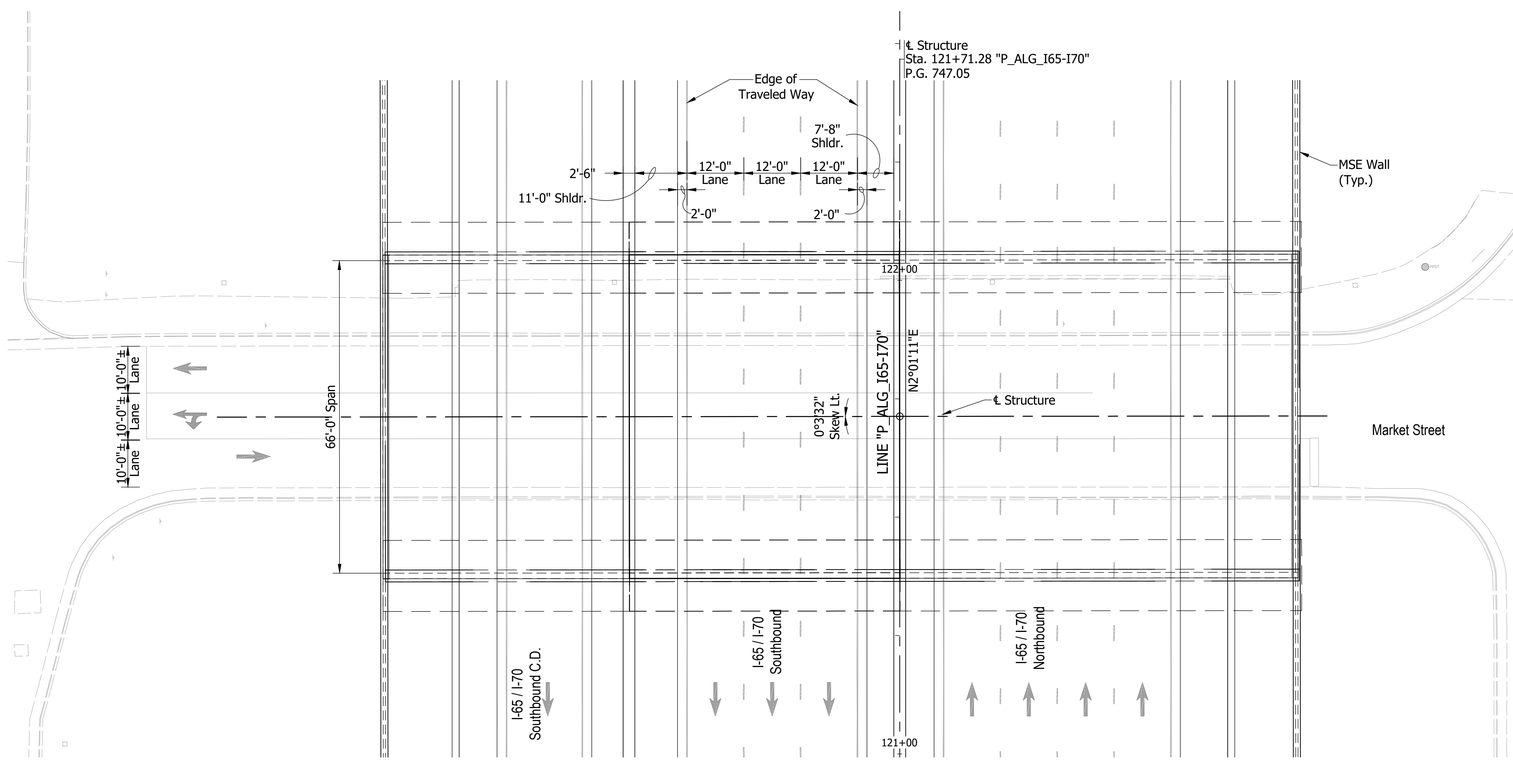

PLAN

Scale: 1/16" = 1'-0"

GENERAL NOTES

Reinforcing bars covering shall be 3" in footings except bottom steel which shall be 4", and 2" in all other parts, unless noted.

All exposed faces of the MSE walls and reinforced concrete bridge approach slabs shall receive surface seal.

See Bridge Aesthetic Plan for Architectural Details.

DESIGN DATA

LIVE LOAD:

Superstructure and Substructure Designed for HL-93 loading in accordance with the AASHTO LRFD Bridge Design Specifications, 8th Edition, 2017 and its subsequent revisions.

DEAD LOAD:

Designed for Actual Dead Load plus 35 psf of future wearing surface.

DESIGN STRESSES

ULTIMATE DESIGN STRENGTHS:

Class "A" Concrete	f'c = 3,500 p.s.i.
Class "B" Concrete	f'c = 3,000 p.s.i.
Reinforcing Steel (Grade 60)	Fy = 60,000 p.s.i. (barrier)
	Fy = 75,000 p.s.i. (all other locations)

SEISMIC DESIGN DATA:

Seismic Site Class	C
PGA (g)	0.051
S_S (g)	0.12
S_1 (g)	0.051
S_{D1} (g)	0.086
Seismic Design Category	A

THREE SIDED PRECAST REINFORCED CONCRETE STRUCTURE
66'-0" CULVERT SPAN x 28'-7 1/2" RISE x 57'-1 3/8" LONG
SKEW: 0°3'32" LT.
I-65 / I-70 S.B. OVER MARKET STREET
MARION COUNTY

RECOMMENDED FOR APPROVAL: _____ DESIGN ENGINEER _____ DATE

DESIGNED: B. WRIGHT DRAWN: L. KIRSCH
CHECKED: M. EICHENAUER CHECKED: B. WRIGHT

INDIANA
DEPARTMENT OF TRANSPORTATION

GENERAL PLAN - PLAN & ELEVATION VIEWS

HORIZONTAL SCALE	BRIDGE FILE
As Noted	I65-111-10605 SBL
VERTICAL SCALE	DESIGNATION
N/A	1901851
SURVEY BOOK	SHEET
ELECTRONIC	5 OF 9
CONTRACT	PROJECT
B-36910	1600808

BFS NO. 6412

\\bfsn1241\Jobs5\641200.0000\ProjDevelopment\Design\Drawings\BRIDGES\02_OVER MARKET STREET\Structure 1901851\1901851_S_BR_PLN01.dwg Dylan Piercefield Plot:2/24/2020 5:38 AM Save:2/20/2020 10:02 AM

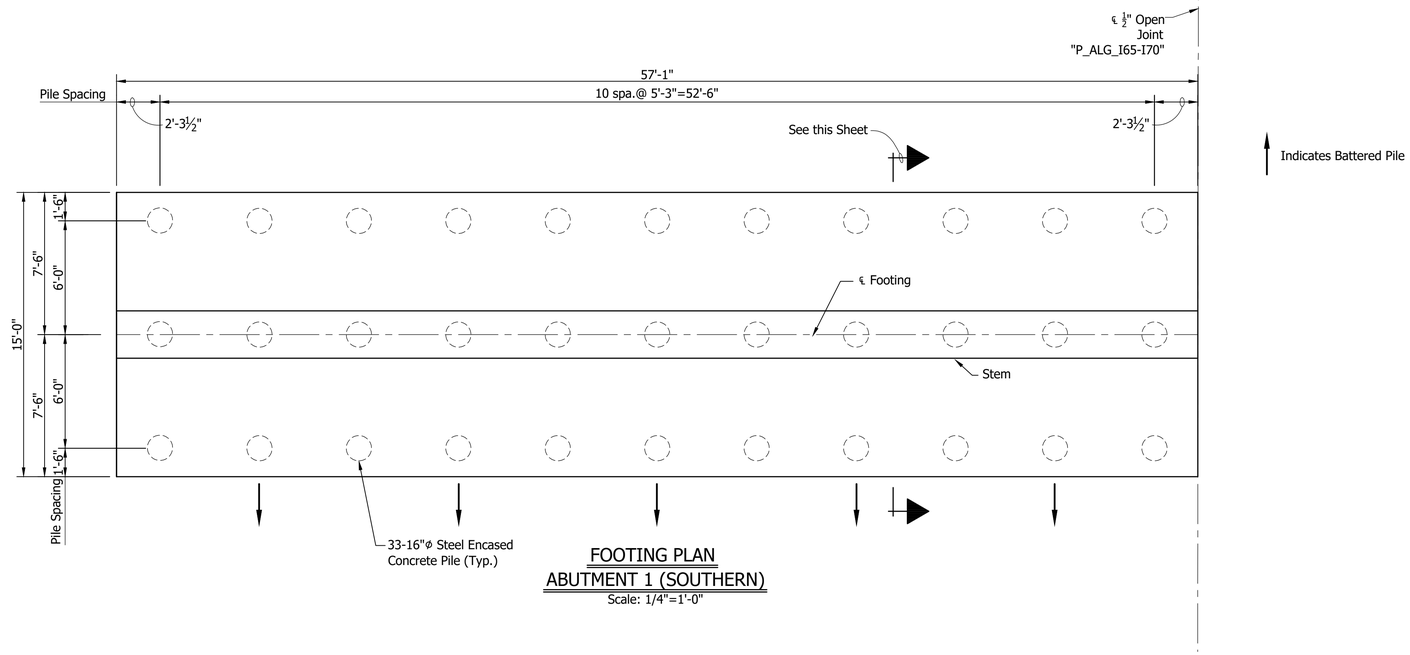

FOOTING PLAN
ABUTMENT 1 (SOUTHERN)
Scale: 1/4"=1'-0"

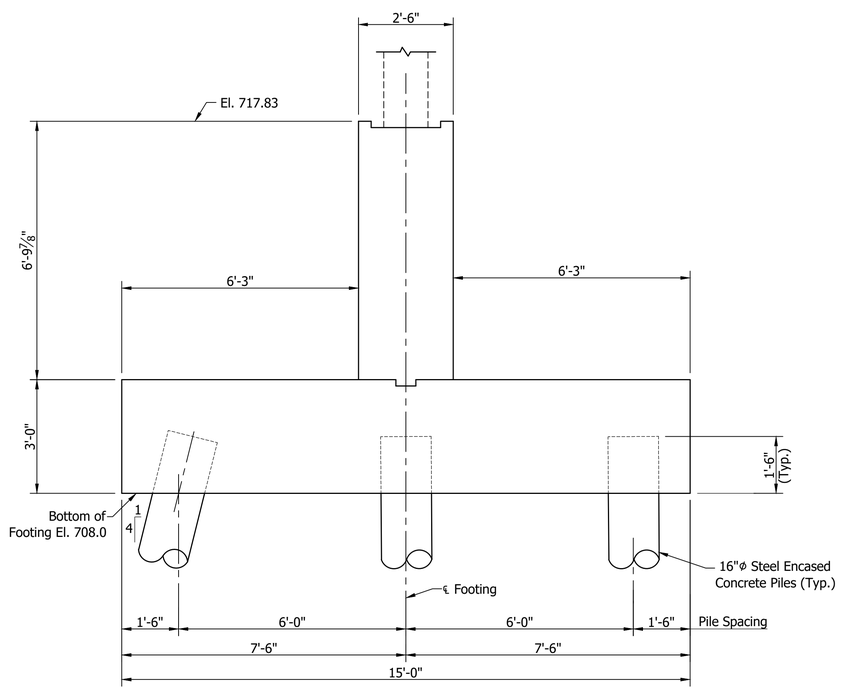

SECTION
Scale: 1/2"=1'-0"

RECOMMENDED FOR APPROVAL: DESIGN ENGINEER DATE	INDIANA DEPARTMENT OF TRANSPORTATION	HORIZONTAL SCALE: As Noted	BRIDGE FILE: I65-111-10605 SBL	6412
		VERTICAL SCALE: N/A	DESIGNATION: 1901851	
DESIGNED: B. WRIGHT DRAWN: D. PIERCEFIELD	ABUTMENT 1 DETAILS	SURVEY BOOK: ELECTRONIC	SHEET: 6 OF 9	BFS NO.
CHECKED: C. O'BRIEN CHECKED: B. WRIGHT		CONTRACT: B-36910	PROJECT: 1600808	

\\bfsnt241\Jobs5\641200.0000\ProjDevelopment\Design\Drawings\BRIDGES\02 OVER MARKET STREET\Structure 1901851\1901851_S_BR_BNT01.dwg Dylan Piercefield Plot:2/24/2020 11:11 AM Save:2/24/2020 11:11 AM

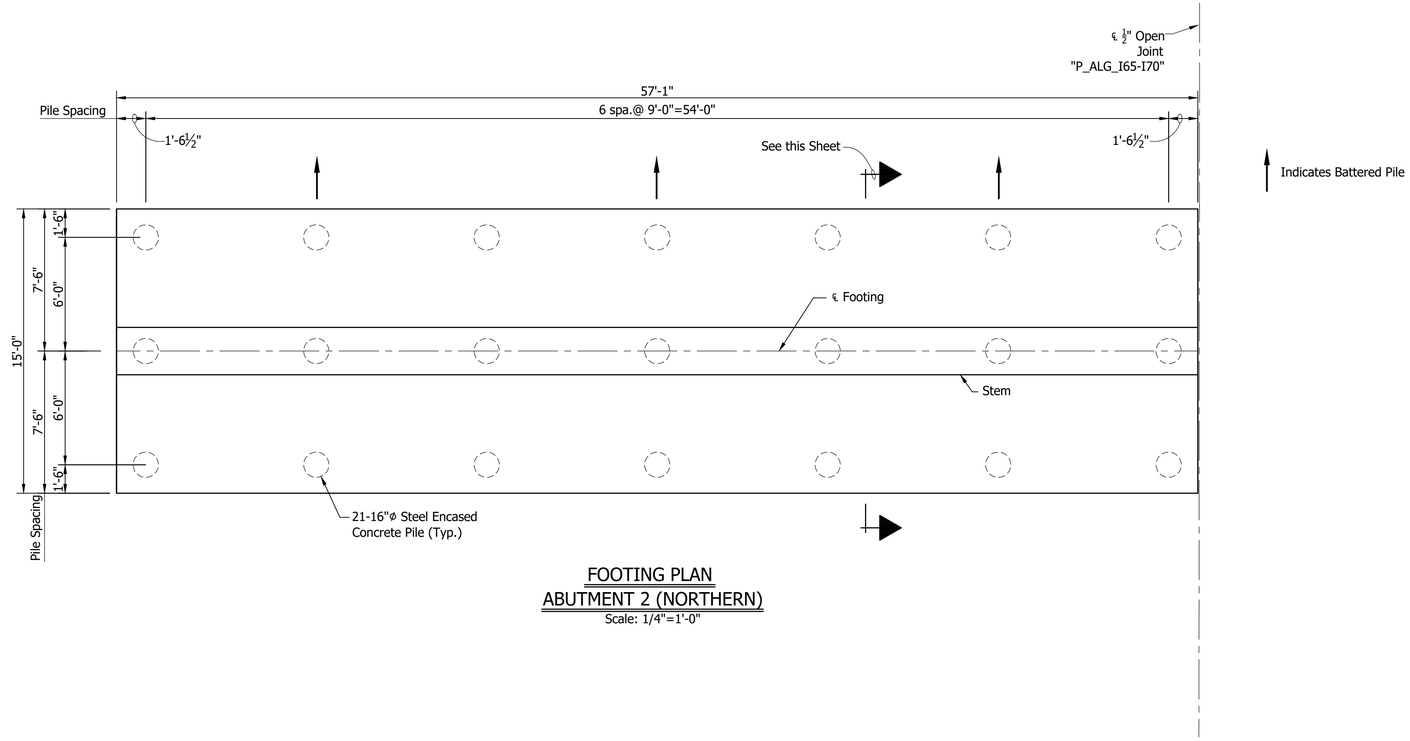

FOOTING PLAN
ABUTMENT 2 (NORTHERN)
Scale: 1/4"=1'-0"

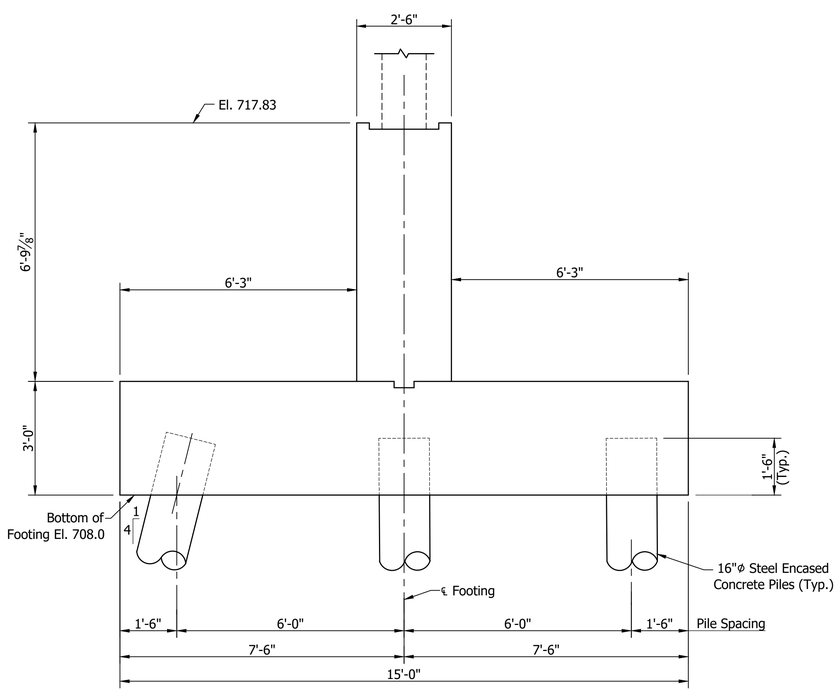

SECTION
Scale: 1/2"=1'-0"

RECOMMENDED FOR APPROVAL: DESIGN ENGINEER DATE	INDIANA DEPARTMENT OF TRANSPORTATION	HORIZONTAL SCALE	BRIDGE FILE	6412
		As Noted	I65-111-10605 SBL	
		VERTICAL SCALE	DESIGNATION	
		N/A	1901851	
DESIGNED: B. WRIGHT DRAWN: D. PIERCEFIELD	ABUTMENT 2 DETAILS	SURVEY BOOK	SHEET	BFS NO.
		ELECTRONIC	7 OF 9	
CHECKED: C. O'BRIEN CHECKED: B. WRIGHT		CONTRACT	PROJECT	
		B-36910	1600808	

\\bfsnt241\jobs5\641200.0000\ProjDevelopment\Design\Drawings\BRIDGES\02 OVER MARKET STREET\Structure 1901851\1901851_S_BR_BNT02.dwg Dylan Piercefield Plot:2/24/2020 5:38 AM Save:2/20/2020 2:47 PM

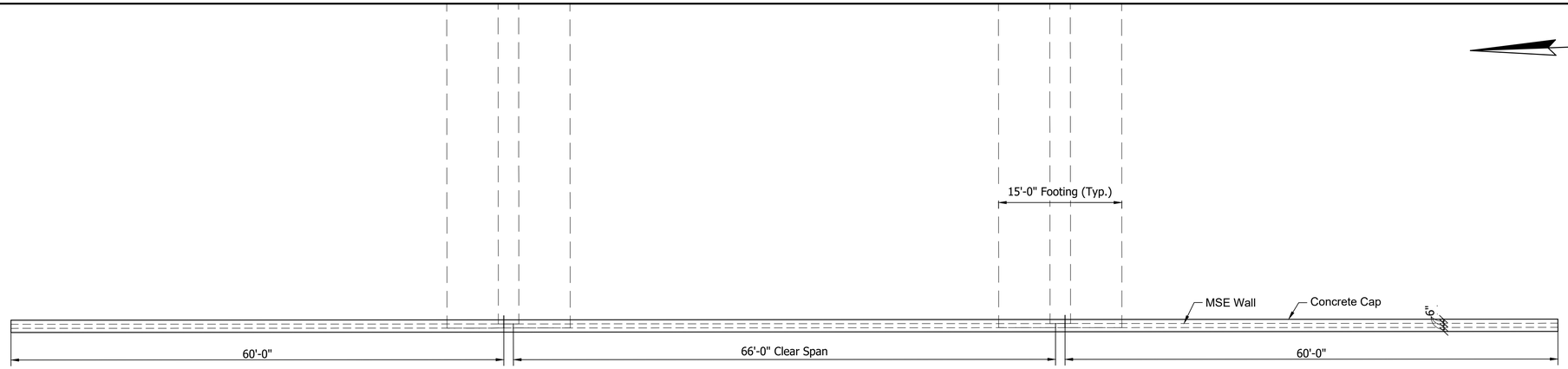

PLAN
WEST WALL
Scale: 1/8"=1'-0"

This Sheet is For Information Only.

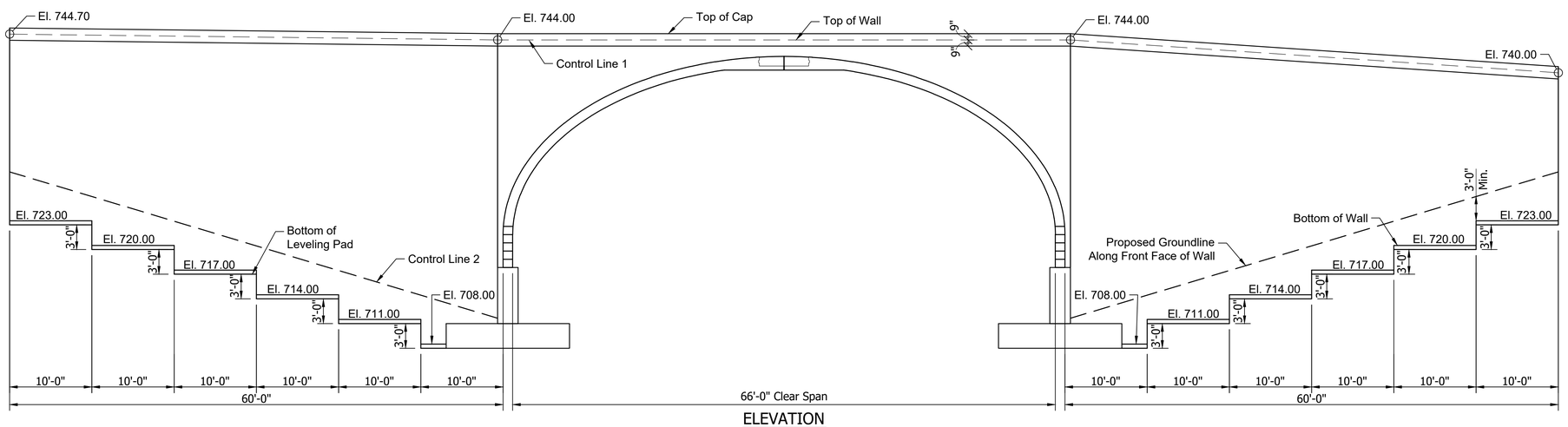

ELEVATION
WEST WALL
Scale: 1/8"=1'-0"

RECOMMENDED FOR APPROVAL: DESIGN ENGINEER DATE	INDIANA DEPARTMENT OF TRANSPORTATION	HORIZONTAL SCALE: As Noted	BRIDGE FILE: I65-111-10605 SBL
		VERTICAL SCALE: N/A	DESIGNATION: 1901851
DESIGNED: B. WRIGHT DRAWN: D. PIERCEFIELD	WALL LAYOUT	SURVEY BOOK: ELECTRONIC	SHEET: 8 OF 9
CHECKED: M. EICHENAUER CHECKED: B. WRIGHT		CONTRACT: B-36910	PROJECT: 1600808

6412
BFS NO.

\\fsnt241\jobs5\641200.0000\ProDevelopment\Design\Drawings\BRIDGES\02 OVER MARKET STREET\Structure 1901851\1901851_S_BR_WL01.dwg Dylan Piercefield Plot:2/24/2020 5:38 AM Save:2/20/2020 2:48 PM

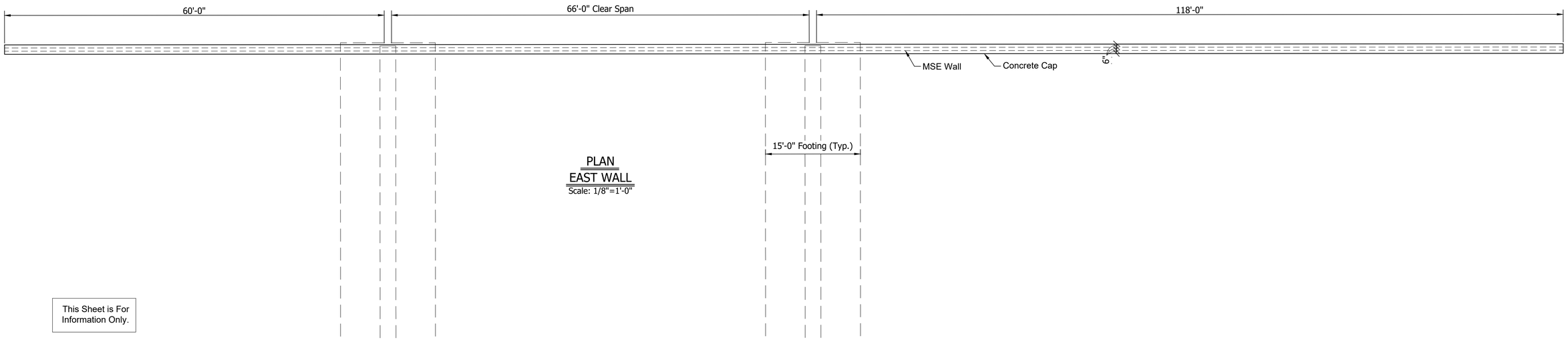

PLAN
EAST WALL
Scale: 1/8"=1'-0"

This Sheet is For Information Only.

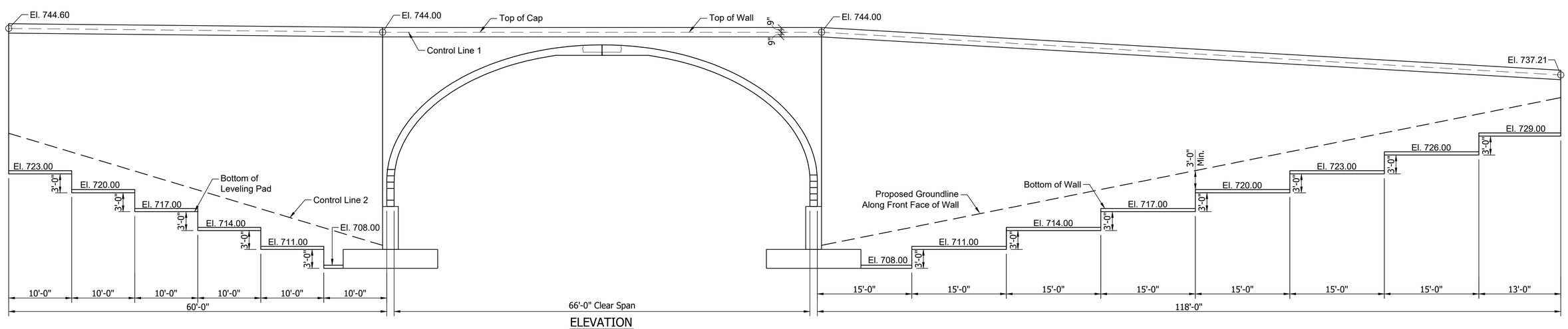

ELEVATION
EAST WALL
Scale: 1/8"=1'-0"

RECOMMENDED FOR APPROVAL: DESIGN ENGINEER DATE	INDIANA DEPARTMENT OF TRANSPORTATION	HORIZONTAL SCALE: As Noted	BRIDGE FILE: I65-111-10605 SBL	
		VERTICAL SCALE: N/A	DESIGNATION: 1901851	
DESIGNED: B. WRIGHT DRAWN: D. PIERCEFIELD	WALL LAYOUT	SURVEY BOOK: ELECTRONIC	SHEET: 9 OF 9	
CHECKED: M. EICHENAUER CHECKED: B. WRIGHT		CONTRACT: B-36910	PROJECT: 1600808	

6412

BFS NO.

\\fsnt241\jobs5\641200.0000\ProjDevelopment\Design\Drawings\BRIDGES\02 OVER MARKET STREET\Structure 1901851\1901851_S_BR_WLL02.dwg Dylan Piercefield Plot:2/24/2020 5:38 AM Save:2/20/2020 2:48 PM

PROJECT	DESIGNATION
1600808	1901852
CONTRACT	BRIDGE FILE
B-36910	I65-111-10606 CD

INDIANA DEPARTMENT OF TRANSPORTATION

BRIDGE PLANS

FOR SPANS OVER 20 FEET

ROUTE: I-65 / I-70 S.B. CD AT: RP 111+30

PROJECT NO. 1600808 P.E.

1600808 CONST.

NO ADDITIONAL RIGHT OF WAY REQUIRED FOR THIS PROJECT

BRIDGE REPLACEMENT ON I-65 / I-70 S.B. CD OVER MARKET STREET
LOCATED 1.00 MILES NORTH OF I-70 (SOUTH SPLIT) INTERCHANGE
SECTION 1, TOWNSHIP 15 NORTH, RANGE 3 EAST
CENTER TOWNSHIP, MARION COUNTY INDIANA

STRUCTURE INFORMATION

STRUCTURE	TYPE	SPAN & SKEW	OVER	STATION
I65-111-10606 CD	THREE SIDED PRECAST REINFORCED CONCRETE STRUCTURE	SPAN: 66'-0" SKEW: 0°3'32" LT.	MARKET STREET	150+72.22 LINE "R_CDS65"

TRAFFIC DATA	I-65 / I-70 S.B. CD	MARKET STREET
A.D.T. (2021)	11,569 V.P.D.	2,477 V.P.D.
A.D.T. (2041)	11,189 V.P.D.	2,243 V.P.D.
D.H.V. (2041)	1,127 V.P.H.	366 V.P.H.
DIRECTIONAL DISTRIBUTION	100 %	65 %
TRUCKS	8 % D.H.V.	4 % D.H.V.
DESIGN DATA		
DESIGN SPEED	55 M.P.H.	30 M.P.H.
PROJECT DESIGN CRITERIA	4R (FREEWAY)	N/A
FUNCTIONAL CLASSIFICATION	URBAN FREEWAY	MINOR COLLECTOR
RURAL/URBAN	URBAN (BUILT-UP)	URBAN (BUILT-UP)
TERRAIN	LEVEL	LEVEL
ACCESS CONTROL	FULL CONTROL	NONE

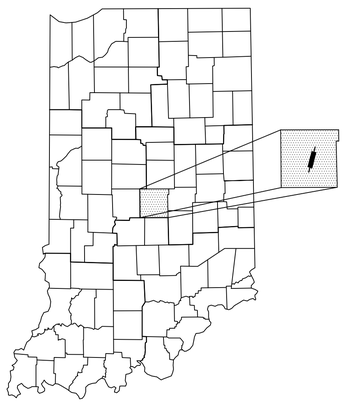

PROJECT LOCATION SHOWN BY

LATITUDE: 39°46'05" N LONGITUDE: 86°08'35" W

BRIDGE LENGTH :	#.### MI.
ROADWAY LENGTH :	SEE ROAD PLANS
TOTAL LENGTH :	SEE ROAD PLANS
MAX GRADE :	2.60%

HUC: 05120201130020

END PROJECT No. 1600808
STATION 25+75.00 LINE "P_ALG_I65"

END PROJECT No. 1600808
STATION 41+85.70 LINE "P_ALG_I70"

R. 3 E. | R. 4 E.

T. 16 N.

T. 15 N.

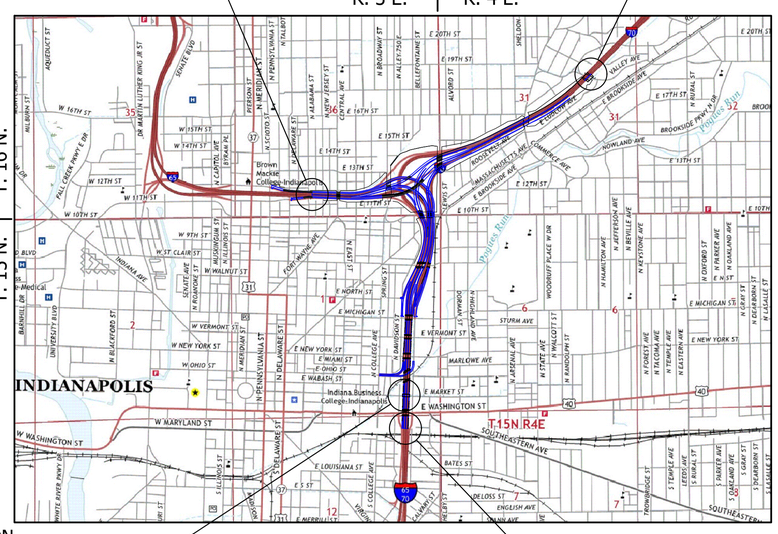

LOCATION MAP
MARION COUNTY

PROJECT LOCATION
BRIDGE FILE No. I65-111-10606 CD
I-65 / I-70 S.B. CD OVER MARKET STREET
STA. 150+72.22 LINE "R_CDS65"

BEGIN PROJECT No. 1600808
STATION 113+00.00 LINE "P_ALG_I65/I70"

SCALE: 1" = 2000'

INDIANA DEPARTMENT OF TRANSPORTATION
STANDARD SPECIFICATIONS DATED 2020 TO
BE USED WITH THESE PLANS.

SUPERIOR CONSTRUCTION

PLANS PREPARED BY: Butler Fairman and Seufert Inc. (317)713-4615 PHONE

CERTIFIED BY: . DATE

APPROVED FOR LETTING: . INDIANA DEPARTMENT OF TRANSPORTATION DATE

BRIDGE FILE
I65-111-10606 CD
DESIGNATION
1901852

SURVEY BOOK	SHEET		
ELECTRONIC	1	OF	9
CONTRACT	PROJECT		
B-36910	1600808		

6412

\\bfsn1241\jobs5\641200.0000\Pro Development\Design\Drawings\BRIDGES\02 OVER MARKET STREET\Structure 1901852\1901852_S_BR_TTL01.dwg Dylan Piercefield Plot:2/24/2020 5:39 AM Save:2/21/2020 9:16 AM

UTILITIES

REVISIONS

SHEET NO.	DATE	REVISED

KIN PROJECT INFORMATION

DESIGNATION	PROJECT DESCRIPTION	
1600808	COMPLETE ROAD RECONSTRUCTION OF I-65/I-70 FROM WASHINGTON STREET TO I-65 OVER DELAWARE STREET AND I-70 OVER VALLEY AVENUE	LEAD DES
1901935	ITS FOR I-65/I-70 FROM WASHINGTON STREET TO I-65 OVER DELAWARE STREET AND I-70 OVER VALLEY AVENUE	
1901936	SIGNS, LIGHTING, SIGNALS AND MARKING FOR I-65/I-70 FROM WASHINGTON STREET TO I-65 OVER DELAWARE STREET AND I-70 OVER VALLEY AVENUE	
1901847	BRIDGE REPLACEMENT ON I-65/I-70 NB OVER WASHINGTON STREET	
1901848	BRIDGE REPLACEMENT ON I-65/I-70 SB OVER WASHINGTON STREET	
1901849	BRIDGE REPLACEMENT ON I-65/I-70 SB CD OVER WASHINGTON STREET	
1901850	BRIDGE REPLACEMENT ON I-65/I-70 NB OVER MARKET STREET	
1901851	BRIDGE REPLACEMENT ON I-65/I-70 SB OVER MARKET STREET	
1901852	BRIDGE REPLACEMENT ON I-65/I-70 SB CD OVER MARKET STREET	
1901853	BRIDGE REPLACEMENT ON I-65/I-70 NB OVER CSX RAILROAD & OHIO STREET	
1901854	BRIDGE REPLACEMENT ON I-65/I-70 SB OVER CSX RAILROAD & OHIO STREET	
1901855	BRIDGE REPLACEMENT ON I-65/I-70 SB CD OVER CSX RAILROAD & OHIO STREET	
1901856	BRIDGE REPLACEMENT ON I-65/I-70 NB OVER NEW YORK STREET	
1901857	BRIDGE REPLACEMENT ON I-65/I-70 SB OVER NEW YORK STREET	
1901858	BRIDGE REPLACEMENT ON I-65/I-70 SB CD OVER NEW YORK STREET	
1901861	BRIDGE REPLACEMENT ON I-65/I-70 SB CD OVER VERMONT STREET	
1901862	BRIDGE REPLACEMENT ON I-65 NB & I-70 EB OVER MICHIGAN STREET	
1901863	BRIDGE REPLACEMENT ON I-65 SB/I-70 WB OVER MICHIGAN STREET	
1901864	BRIDGE REPLACEMENT ON I-65/I-70 SB CD OVER MICHIGAN STREET	
1901865	BRIDGE REPLACEMENT ON I-65 NB OVER I-70 EB ENTRANCE RAMP	
1901881	BRIDGE REPLACEMENT ON I-65 NB OVER ST. CLAIR STREET	
1901889	NEW BRIDGE CONSTRUCTION ON I-70 EB OVER ST. CLAIR STREET	
1901892	BRIDGE REPLACEMENT ON I-65 SB/I-70 WB OVER ST. CLAIR STREET	
1901896	NEW BRIDGE CONSTRUCTION ON SB CD OVER ST. CLAIR STREET	
1901897	BRIDGE REPLACEMENT ON I-65 NB OVER EAST 10TH STREET	
1901899	NEW BRIDGE CONSTRUCTION ON I-70 EB OVER EAST 10TH STREET	
1901901	BRIDGE REPLACEMENT ON I-65 SB OVER EAST 10TH STREET	
1901903	BRIDGE REPLACEMENT ON I-70 WB OVER EAST 10TH STREET	
1901905	NEW BRIDGE CONSTRUCTION ON SB CD & RAMP OVER EAST 10TH STREET	
1901906	NEW BRIDGE CONSTRUCTION ON I-65 NB CD EXIT RAMP OVER CENTRAL AVENUE	
1901907	BRIDGE REPLACEMENT ON I-65 NB OVER CENTRAL AVENUE	
1901908	BRIDGE REPLACEMENT ON I-65 SB OVER CENTRAL AVENUE	
1901909	NEW BRIDGE CONSTRUCTION ON I-65 SB CD ENTRANCE RAMP OVER CENTRAL AVE.	
1901914	BRIDGE REPLACEMENT ON I-70 WB TO I-65 NB OVER COLLEGE AVENUE	
1901915	BRIDGE REPLACEMENT ON I-65 NB & PENNSYLVANIA EXIT RAMP OVER COLLEGE AVENUE	
1901917	BRIDGE REPLACEMENT ON I-65 SB & SB CD RAMP OVER COLLEGE AVENUE	
1901918	BRIDGE REPLACEMENT ON I-65 SB & DELAWARE ENTRANCE RAMP TO I-70 EB OVER COLLEGE AVENUE & FIVE RAMPS	
1901919	BRIDGE REPLACEMENT ON I-65 NB OVER I-70 WB & RAMP	
1901920	BRIDGE REPLACEMENT ON I-70 WB TO I-65 NB OVER THREE RAMPS	
1901921	BRIDGE REPLACEMENT ON I-65 SB OVER I-70 WB & SB CD RAMP	
1901922	NEW BRIDGE CONSTRUCTION ON I-70 EB OVER I-65 NB	
1901923	BRIDGE REPLACEMENT ON I-70 WB & SB CD OVER LEWIS STREET & MONON TRAIL	
1901925	NEW BRIDGE CONSTRUCTION ON I-70 WB TO I-65 NB OVER LEWIS STREET & MONON TRAIL	
1901927	NOT USED	
1901928	BRIDGE REPLACEMENT ON I-70 EB OVER LEWIS STREET & MONON TRAIL	
1901929	PREVENTATIVE MAINTENANCE ON I-70 WB OVER ROOSEVELT AT COMMERCE AVENUE	
1901930	PREVENTATIVE MAINTENANCE ON I-70 EB OVER ROOSEVELT AT COMMERCE AVENUE	
1901931	PREVENTATIVE MAINTENANCE ON I-70 WB OVER VALLEY AVENUE	
1901932	PREVENTATIVE MAINTENANCE ON I-70 EB OVER VALLEY AVENUE	
1901933	REHABILITATE AND WIDEN ON I-65 OVER 7 STREETS, ACCESS RD, MONORAIL (AKA "MONSTER BRIDGE") - PENNSYLVANIA EXIT RAMP	
1901934	REHABILITATE AND WIDEN ON I-65 OVER 7 STREETS, ACCESS RD, MONORAIL (AKA "MONSTER BRIDGE") - DELAWARE ENTRANCE RAMP	
1902179	BRIDGE REPLACEMENT ON I-65 NB/I70 EB OVER VERMONT STREET	
1902180	BRIDGE REPLACEMENT ON I-65 SB/I70 WB OVER VERMONT STREET	

INDEX

SHEET NO.	DESIGNATION
1	TITLE
2	INDEX
3	MAINTENANCE OF TRAFFIC
4	LAYOUT
5	GENERAL PLAN - PLAN & ELEVATION VIEWS
6	ABUTMENT 1 DETAILS
7	ABUTMENT 2 DETAILS
8	WALL LAYOUT
9	WALL LAYOUT

RECOMMENDED FOR APPROVAL: _____ DESIGN ENGINEER _____ DATE

DESIGNED: B. WRIGHT DRAWN: K. COFFMAN

CHECKED: M. EICHENAUER CHECKED: B. WRIGHT

INDIANA
DEPARTMENT OF TRANSPORTATION

INDEX

HORIZONTAL SCALE	BRIDGE FILE
N/A	I65-111-10606 CD
VERTICAL SCALE	DESIGNATION
N/A	1901852
SURVEY BOOK	SHEET
ELECTRONIC	2 OF 9
CONTRACT	PROJECT
B-36910	1600808

6412

BFS NO.

\\bfsnt241\jobs5\641200.0000\ProjDevelopment\Design\Drawings\BRIDGES\02 OVER MARKET STREET\Structure 1901852\1901852_S_BR_IN001.dwg Dylan Piercefield Plot:2/24/2020 7:06 AM Save:2/24/2020 7:06 AM

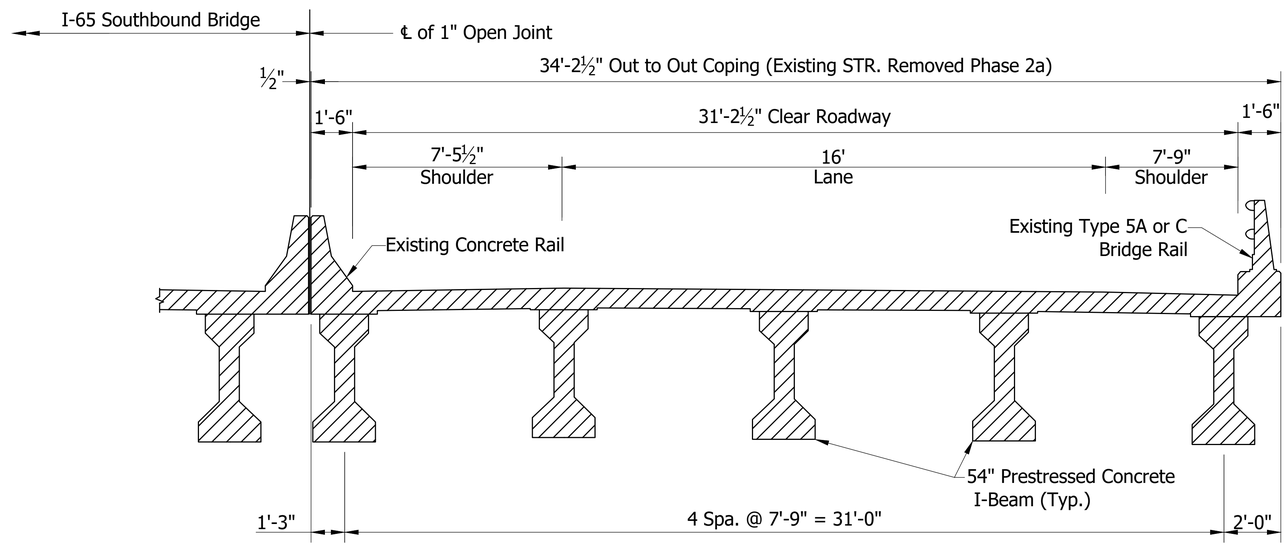

EXISTING SOUTHBOUND CD TYPICAL SECTION

NOT TO SCALE

See Sheet 5 for Phase 2A Construction Details.

	RECOMMENDED FOR APPROVAL: DESIGN ENGINEER DATE	INDIANA DEPARTMENT OF TRANSPORTATION	HORIZONTAL SCALE: As Noted	BRIDGE FILE: I65-111-10606 CD
			VERTICAL SCALE: N/A	DESIGNATION: 1901852
	DESIGNED: B. WRIGHT DRAWN: K. COFFMAN	MAINTENANCE OF TRAFFIC	SURVEY BOOK: ELECTRONIC	SHEET: 3 OF 9
	CHECKED: M. EICHENAUER CHECKED: B. WRIGHT		CONTRACT: B-36910	PROJECT: 1600808

BFS NO. 6412

\\bfsn1241\Jobs5\641200.0000\ProjDevelopment\Design\Drawings\BRIDGES\02 OVER MARKET STREET\Structure 1901852\1901852_S_BR_M0101.dwg Dylan Piercefield Plot:2/24/2020 5:39 AM Save:2/14/2020 3:05 PM

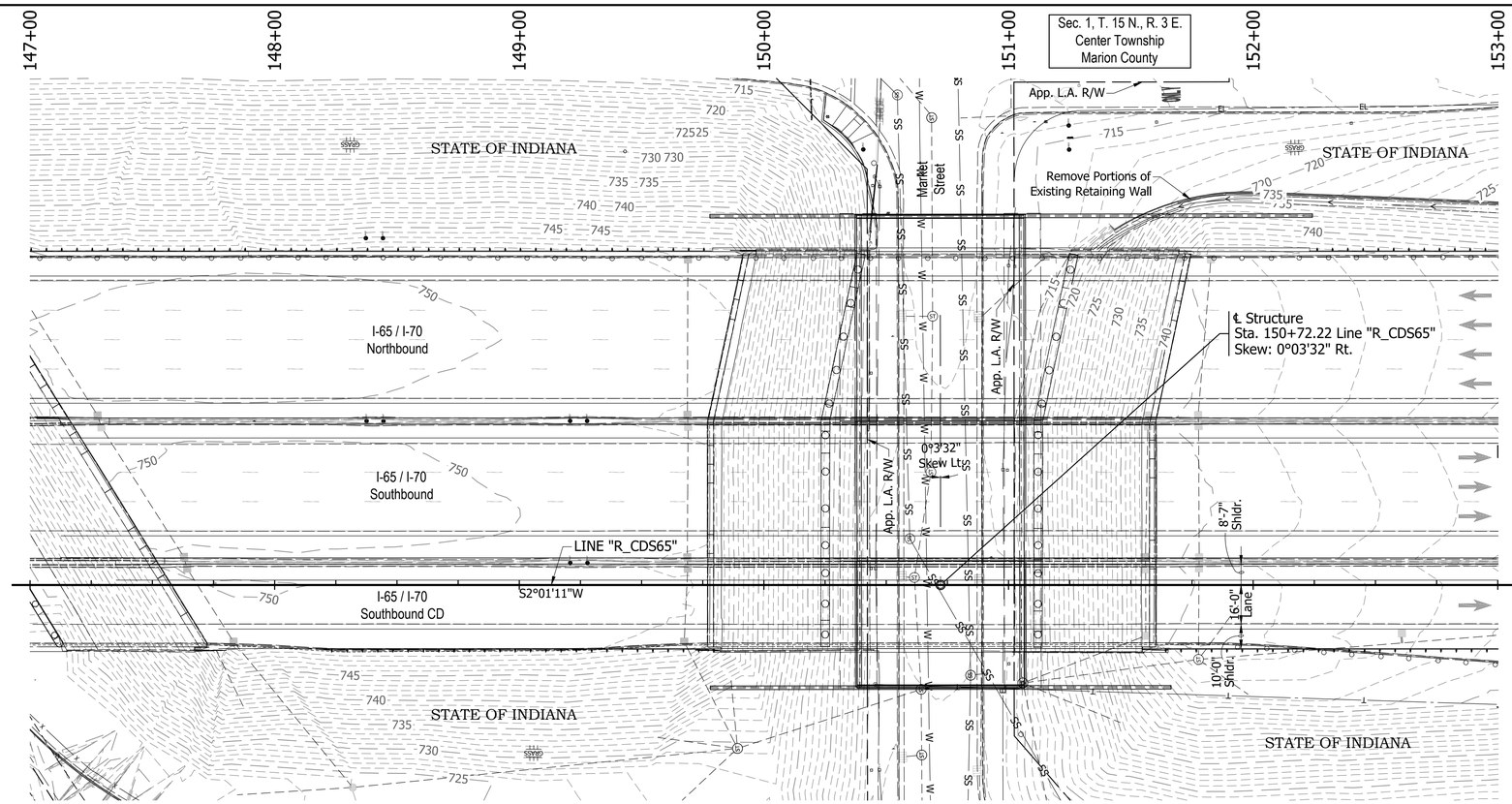

EXISTING STRUCTURE

The existing structure was built in 1974. Structure was rehabilitated in 2003. The structure is a 3-span continuous composite prestressed concrete I-beam bridge.

Span lengths: 1 @ 47'-0", 1 @ 87'-1", 1 @ 47'-0"

Clear roadway 31'-2 ½". Total length of 185'-6 1/8"

Existing structure to be removed.

Existing plans are on file with the Indiana Department of Transportation under Bridge File No. I-65-112-5728 & I-65-112-5728A.

EARTHWORK TABULATION

See Roadway Plans (DES #_____) for earthwork tabulation.

NOTE: ALL TOPOGRAPHY INFORMATION REFERENCED TO LINE "P_ALG_I65-I70" UNLESS NOTED.

ALL R/W ON THIS SHEET DESCRIBED FROM LINE "P_ALG_I65-I70" UNLESS OTHERWISE NOTED

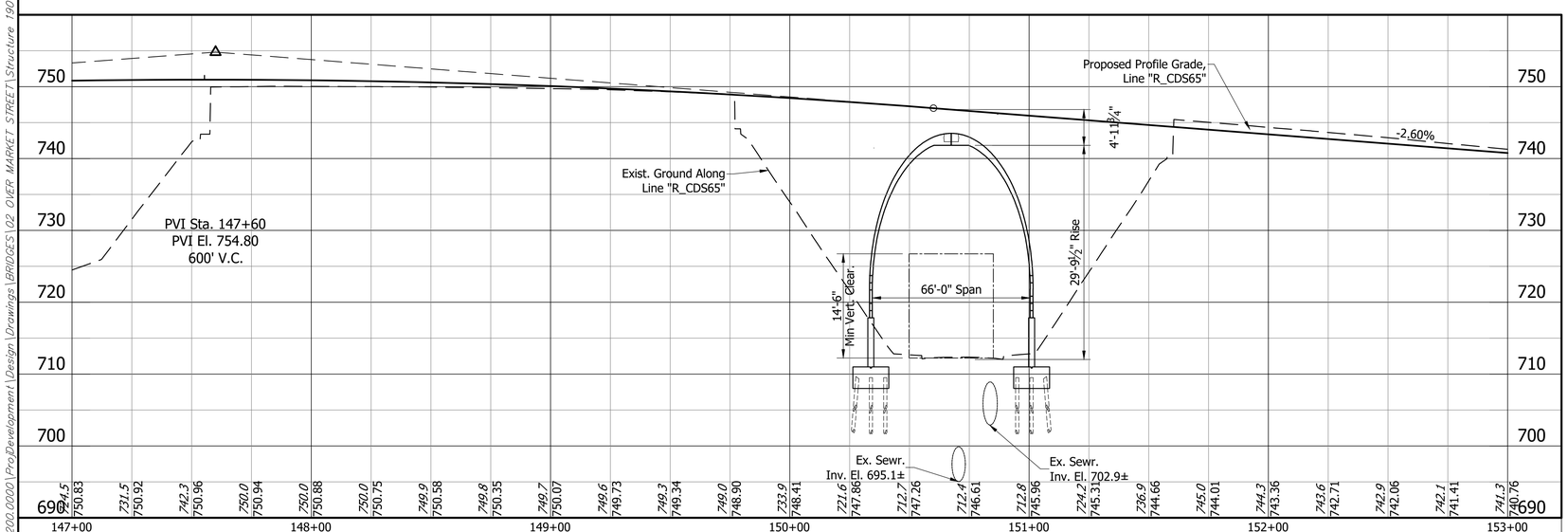

Notes:

1. For R/W and property information, see Location Control Route Survey (DES # _____).
2. For alignment data, see Geometric Layout Sheets (DES #_____).
3. See Road Plans (DES #_____) for Horizontal & Vertical Control Data.

THREE SIDED PRECAST REINFORCED CONCRETE STRUCTURE
66'-0" CULVERT SPAN x 29'-9 1/2" RISE x 52'-0" LONG
SKEW: 0°3'32" LT.
I-65 / I-70 S.B. CD OVER MARKET STREET
MARION COUNTY

RECOMMENDED FOR APPROVAL: _____ DESIGN ENGINEER _____ DATE

DESIGNED: B. WRIGHT | DRAWN: L. KIRSCH
CHECKED: M. EICHENAUER | CHECKED: B. WRIGHT

INDIANA
DEPARTMENT OF TRANSPORTATION

LAYOUT

HORIZONTAL SCALE	BRIDGE FILE
1" = 30'	I65-111-10606 CD
VERTICAL SCALE	DESIGNATION
1" = 10'	1901852
SURVEY BOOK	SHEET
ELECTRONIC	4 OF 9
CONTRACT	PROJECT
B-36910	1600808

BFS NO. 6412

\\bfsn1241\Jobs5\641200.0000\ProjDevelopment\Design\Drawings\BRIDGES\02_OVER MARKET STREET\Structure 1901852\1901852_S_BR_LAY01.dwg Dylan Piercefield Plot:2/24/2020 5:40 AM Save:2/17/2020 3:02 PM

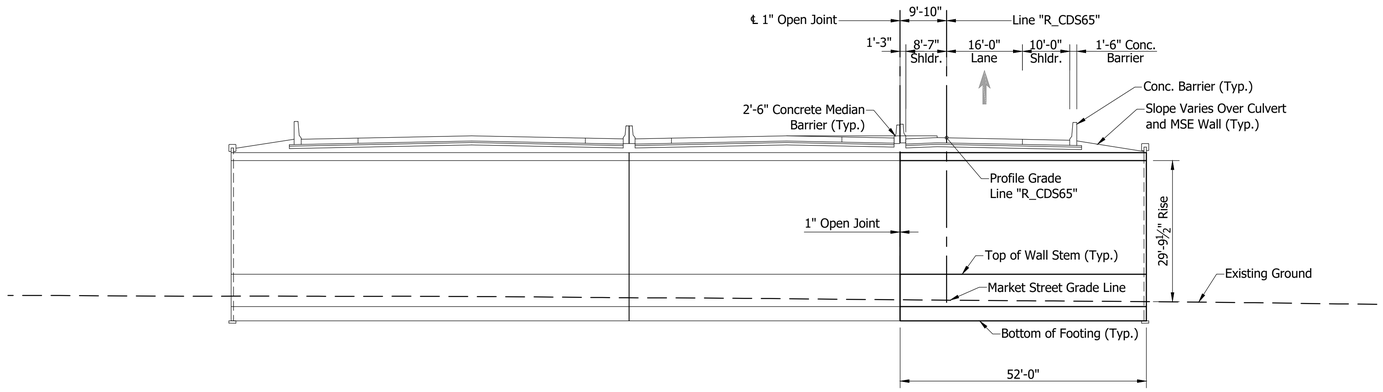

ELEVATION

Scale: 1/16" = 1'-0"

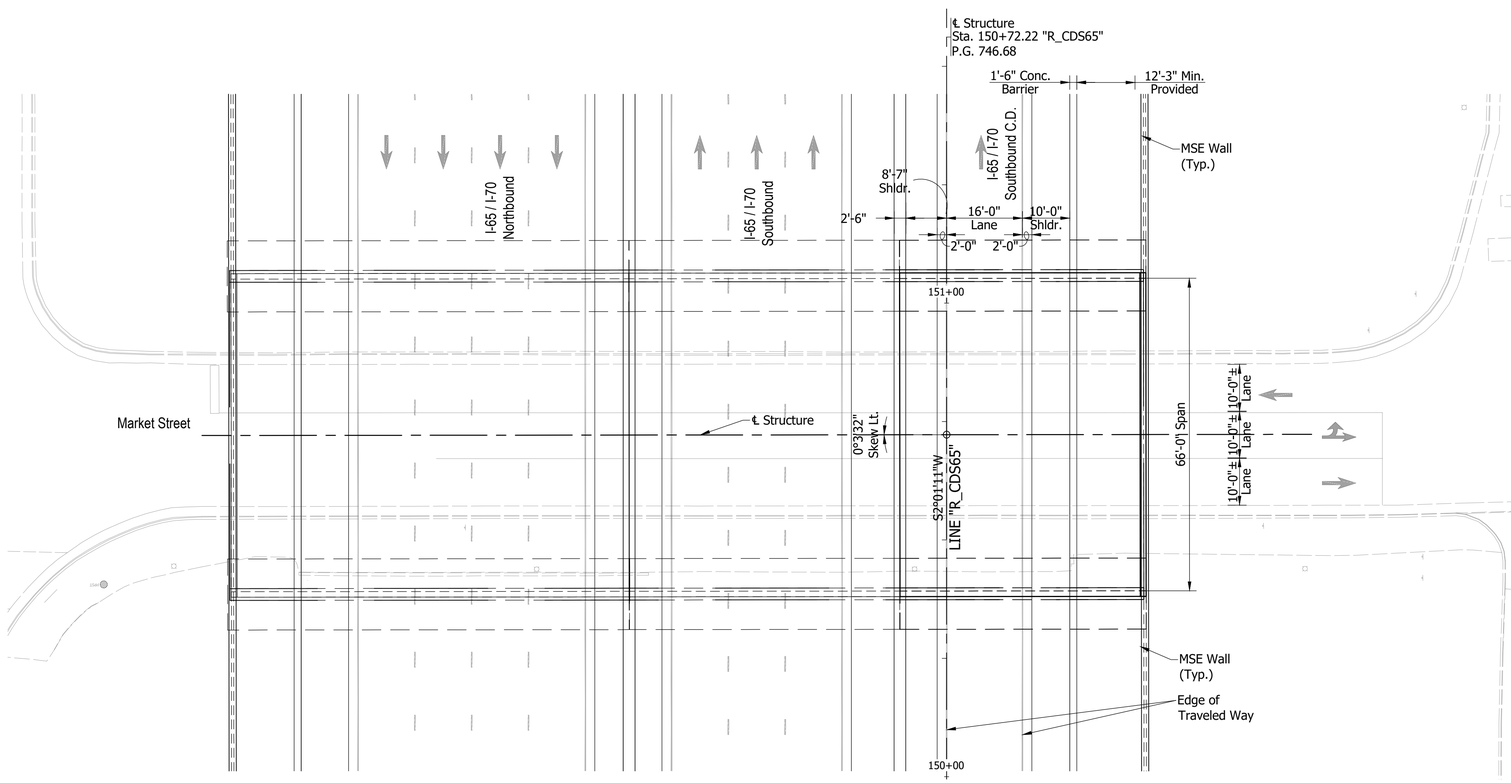

PLAN

Scale: 1/16" = 1'-0"

GENERAL NOTES

Reinforcing bars covering shall be 3" in footings except bottom steel which shall be 4", and 2" in all other parts, unless noted.

All exposed faces of the MSE walls and reinforced concrete bridge approach slabs shall receive surface seal.

See Bridge Aesthetic Plan for Architectural Details.

DESIGN DATA

LIVE LOAD:

Superstructure and Substructure Designed for HL-93 loading in accordance with the AASHTO LRFD Bridge Design Specifications, 8th Edition, 2017 and its subsequent revisions.

DEAD LOAD:

Designed for Actual Dead Load plus 35 psf of future wearing surface.

DESIGN STRESSES

ULTIMATE DESIGN STRENGTHS:

Class "A" Concrete	f'c = 3,500 p.s.i.
Class "B" Concrete	f'c = 3,000 p.s.i.
Reinforcing Steel (Grade 60)	Fy = 60,000 p.s.i. (barrier)
	Fy = 75,000 p.s.i. (all other locations)

SEISMIC DESIGN DATA:

Seismic Site Class	C
PGA (g)	0.051
S_s (g)	0.12
S_1 (g)	0.051
S_{D1} (g)	0.086
Seismic Design Category	A

THREE SIDED PRECAST REINFORCED CONCRETE STRUCTURE
66'-0" CULVERT SPAN x 29'-9 1/2" RISE x 52'-0" LONG
SKEW: 0°3'32" LT.
I-65 / I-70 S.B. CD OVER MARKET STREET
MARION COUNTY

RECOMMENDED FOR APPROVAL: _____ DESIGN ENGINEER _____ DATE

DESIGNED: B. WRIGHT DRAWN: L. KIRSCH
CHECKED: M. EICHENAUER CHECKED: B. WRIGHT

INDIANA
DEPARTMENT OF TRANSPORTATION

GENERAL PLAN - PLAN & ELEVATION VIEWS

HORIZONTAL SCALE	BRIDGE FILE
As Noted	I65-111-10606 CD
VERTICAL SCALE	DESIGNATION
N/A	1901852
SURVEY BOOK	SHEET
ELECTRONIC	5 OF 9
CONTRACT	PROJECT
B-36910	1600808

BPS NO. 6412

\\bfsn1241\Jobs5\641200.0000\ProDevelopment\Design\Drawings\BRIDGES\02 OVER MARKET STREET\Structure 1901852\1901852_S_BR_PLN01.dwg Dylan Piercefield Plot:2/24/2020 5:40 AM Save:2/20/2020 9:59 AM

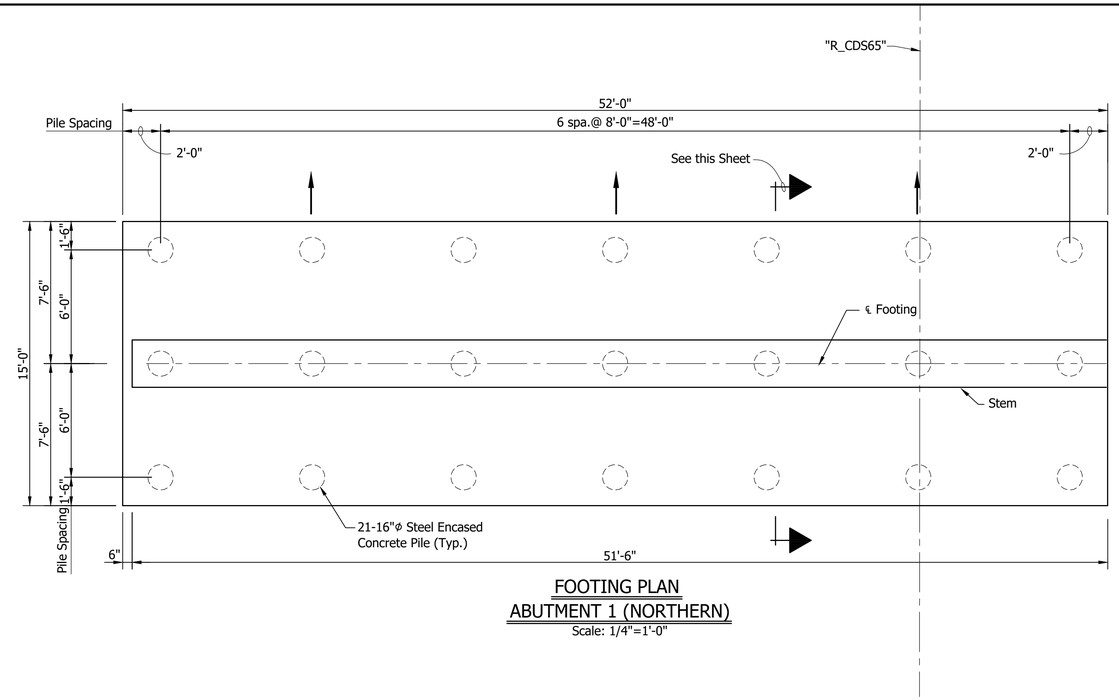

Indicates Battered Pile

FOOTING PLAN
ABUTMENT 1 (NORTHERN)
Scale: 1/4"=1'-0"

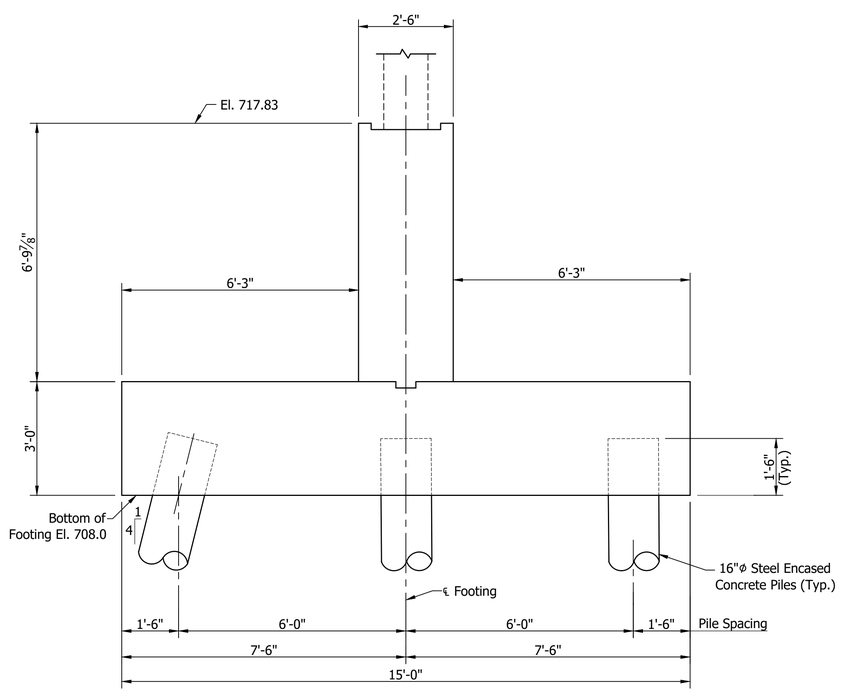

SECTION
Scale: 1/2"=1'-0"

RECOMMENDED FOR APPROVAL: DESIGN ENGINEER DATE	INDIANA DEPARTMENT OF TRANSPORTATION	HORIZONTAL SCALE: As Noted	BRIDGE FILE: I65-111-10606 CD	6412
		VERTICAL SCALE: N/A	DESIGNATION: 1901852	
DESIGNED: B. WRIGHT DRAWN: D. PIERCEFIELD	ABUTMENT 1 DETAILS	SURVEY BOOK: ELECTRONIC	SHEET: 6 OF 9	BFS NO.
CHECKED: C. O'BRIEN CHECKED: B. WRIGHT		CONTRACT: B-36910	PROJECT: 1600808	

\\bfsnt241\jobs5\641200.0000\ProDevelopment\Design\Drawings\BRIDGES\02_OVER_MARKET_STREET\Structure_1901852\1901852_S_BR_BNT01.dwg Dylan Piercefield Plot:2/24/2020 5:40 AM Save:2/20/2020 2:49 PM

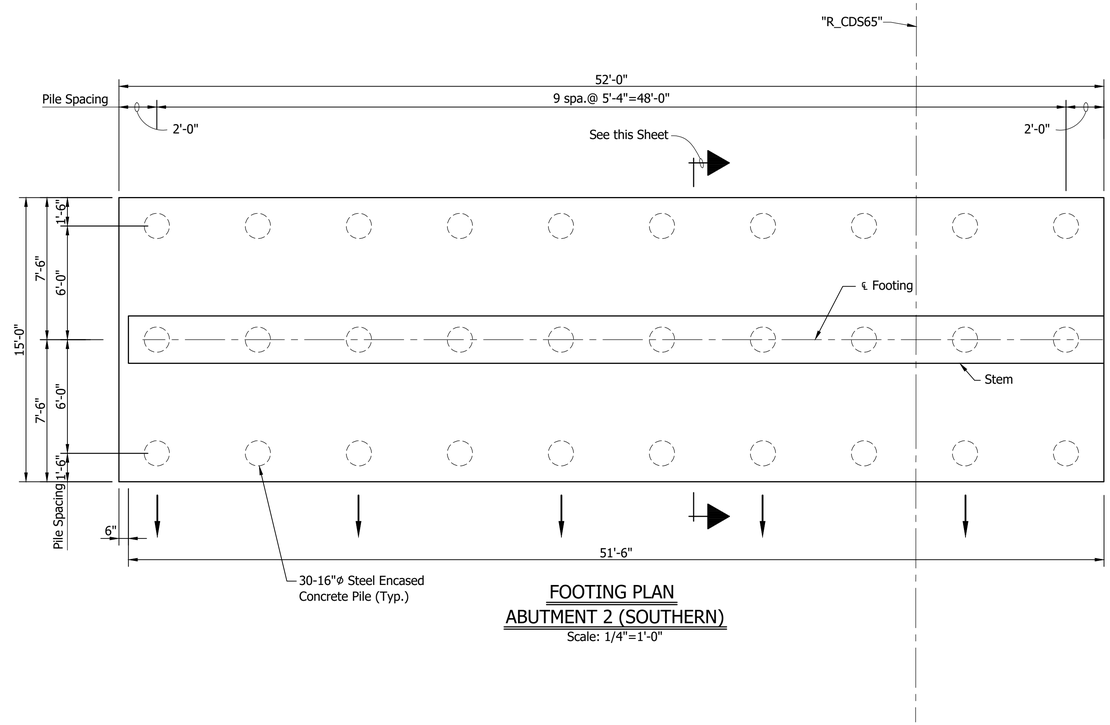

FOOTING PLAN
ABUTMENT 2 (SOUTHERN)
Scale: 1/4"=1'-0"

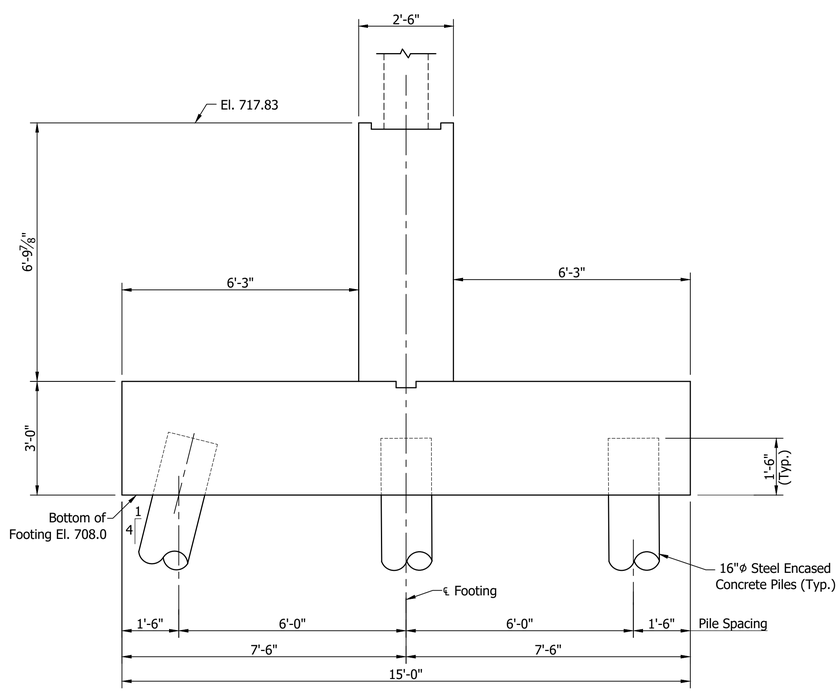

SECTION
Scale: 1/2"=1'-0"

RECOMMENDED FOR APPROVAL: _____ DESIGN ENGINEER DATE

DESIGNED: B. WRIGHT DRAWN: D. PIERCEFIELD

CHECKED: C. O'BRIEN CHECKED: B. WRIGHT

INDIANA
DEPARTMENT OF TRANSPORTATION

ABUTMENT 2 DETAILS

HORIZONTAL SCALE	BRIDGE FILE
As Noted	I65-111-10606 CD
VERTICAL SCALE	DESIGNATION
N/A	1901852
SURVEY BOOK	SHEET
ELECTRONIC	7 OF 9
CONTRACT	PROJECT
B-36910	1600808

BFS NO. 6412

\\bfsnt241\jobs5\641200.0000\ProDevelopment\Design\Drawings\BRIDGES\02 OVER MARKET STREET\Structure 1901852\1901852_S_BR_BNT02.dwg Dylan Piercefield Plot:2/24/2020 11:13 AM Save:2/24/2020 11:12 AM

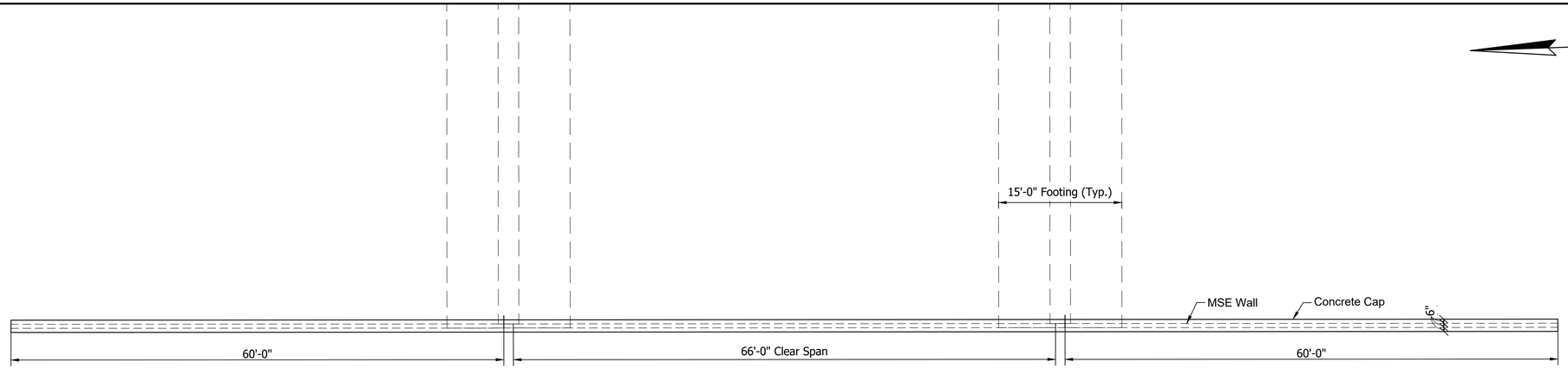

PLAN
WEST WALL
Scale: 1/8"=1'-0"

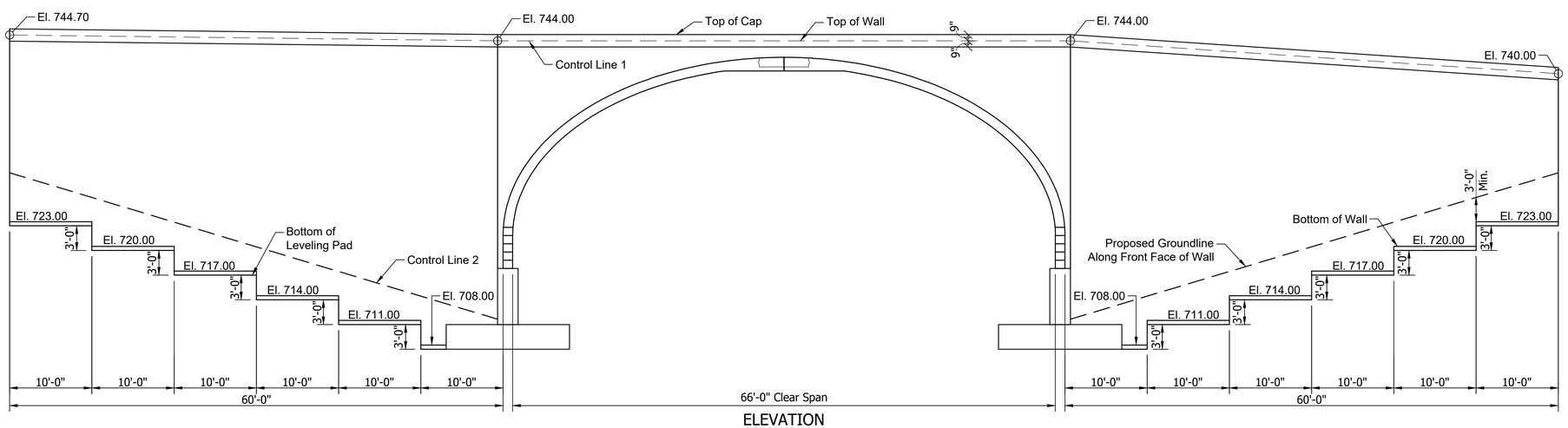

ELEVATION
WEST WALL
Scale: 1/8"=1'-0"

	RECOMMENDED FOR APPROVAL: DESIGN ENGINEER DATE	INDIANA DEPARTMENT OF TRANSPORTATION	HORIZONTAL SCALE: As Noted	BRIDGE FILE: I65-111-10606 CD
			VERTICAL SCALE: N/A	DESIGNATION: 1901852
	DESIGNED: B. WRIGHT DRAWN: D. PIERCEFIELD	WALL LAYOUT	SURVEY BOOK: ELECTRONIC	SHEET: 8 OF 9
	CHECKED: M. EICHENAUER CHECKED: B. WRIGHT		CONTRACT: B-36910	PROJECT: 1600808

6412

BFS NO.

\\bfsn1241\jobs5\641200.0000\Proj\Development\Design\Drawings\BRIDGES\02 OVER MARKET STREET\Structure 1901852\1901852_S_BR_WL01.dwg Dylan Piercefield Plot-2/24/2020 5:40 AM Save-2/20/2020 2:50 PM

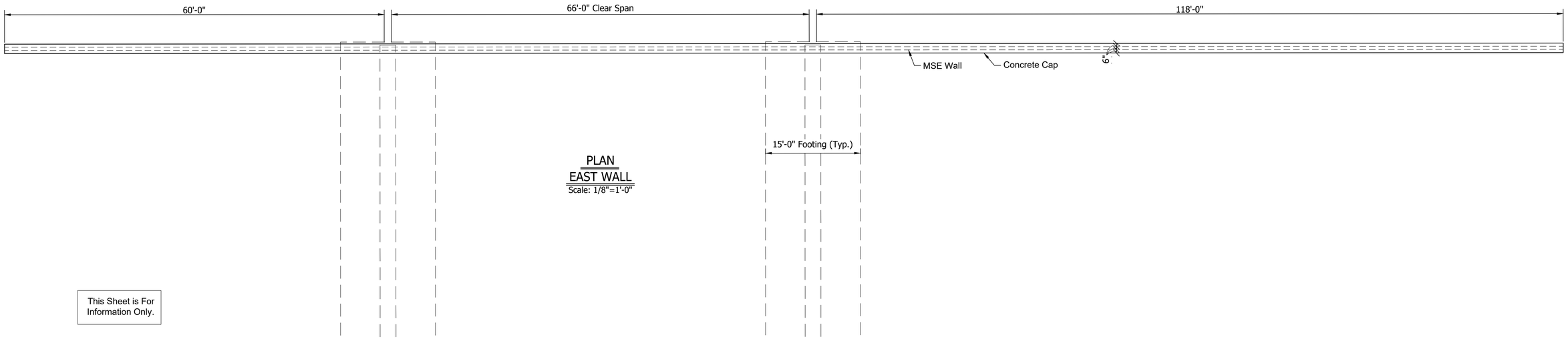

PLAN
EAST WALL
Scale: 1/8"=1'-0"

This Sheet is For Information Only.

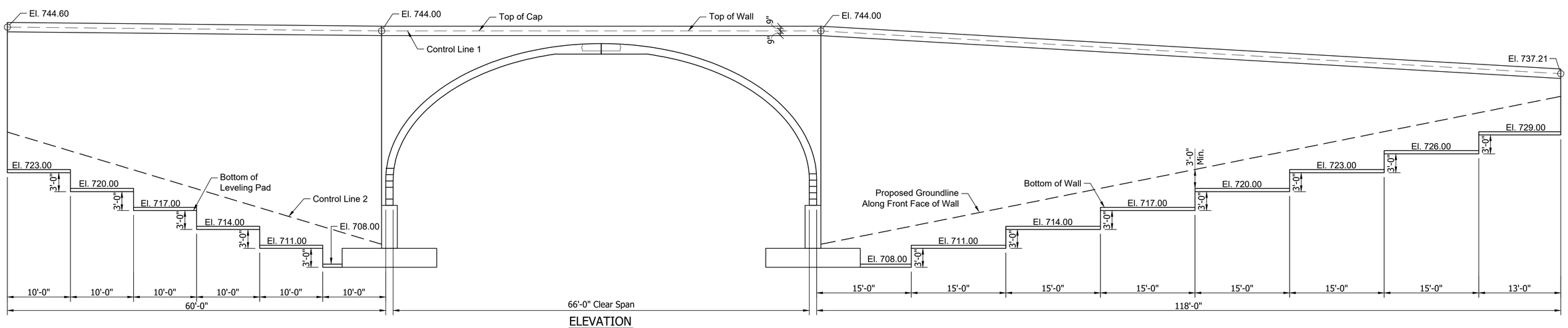

ELEVATION
EAST WALL
Scale: 1/8"=1'-0"

RECOMMENDED FOR APPROVAL: DESIGN ENGINEER DATE	INDIANA DEPARTMENT OF TRANSPORTATION	HORIZONTAL SCALE: As Noted	BRIDGE FILE: I65-111-10606 CD
		VERTICAL SCALE: N/A	DESIGNATION: 1901852
DESIGNED: B. WRIGHT DRAWN: D. PIERCEFIELD	WALL LAYOUT	SURVEY BOOK: ELECTRONIC	SHEET: 9 OF 9
CHECKED: M. EICHENAUER CHECKED: B. WRIGHT		CONTRACT: B-36910	PROJECT: 1600808

6412

BFS NO.

\\bfsn1241\jobs5\641200.0000\Proj\Development\Design\Drawings\BRIDGES\02 OVER MARKET STREET\Structure 1901852\1901852_S_BR_WL102.dwg Dylan Piercefield Plot:2/24/2020 5:40 AM Save:2/20/2020 2:50 PM

PROJECT	DESIGNATION
1600808	1901856
CONTRACT	BRIDGE FILE
B-36910	I65-111-10607 NBL

STRUCTURE INFORMATION

STRUCTURE	TYPE	SPAN & SKEW	OVER	STATION
I65-111-10607 NBL	PRESTRESSED COMPOSITE CONCRETE BULB-TEE BEAM BRIDGE	1 SPAN: 101'-0" SKEW: NO SKEW	NEW YORK STREET	132+14.65 LINE "P_ALG_I65-I70"

INDIANA DEPARTMENT OF TRANSPORTATION

BRIDGE PLANS

FOR SPANS OVER 20 FEET

ROUTE: I-65 / I-70 N.B. AT: RP 111+49

PROJECT NO. 1600808 P.E.

1600808 CONST.

NO ADDITIONAL RIGHT OF WAY REQUIRED FOR THIS PROJECT

BRIDGE REPLACEMENT ON I-65 / I-70 N.B. OVER NEW YORK STREET
LOCATED 1.19 MILES NORTH OF I-70 (SOUTH SPLIT) INTERCHANGE
SECTION 1, TOWNSHIP 15 NORTH, RANGE 3 EAST
CENTER TOWNSHIP, MARION COUNTY INDIANA

TRAFFIC DATA	I-65 / I-70 N.B.	NEW YORK STREET
A.D.T. (2021)	62,989 V.P.D.	11,034 V.P.D.
A.D.T. (2041)	76,198 V.P.D.	12,639 V.P.D.
D.H.V. (2041)	6,553 V.P.H.	1,679 V.P.H.
DIRECTIONAL DISTRIBUTION	100 %	61 %
TRUCKS	9 % D.H.V.	2 % D.H.V.
DESIGN DATA		
DESIGN SPEED	55 M.P.H.	25 M.P.H.
PROJECT DESIGN CRITERIA	4R (FREEWAY)	N/A
FUNCTIONAL CLASSIFICATION	URBAN FREEWAY	MINOR ARTERIAL
RURAL/URBAN	URBAN (BUILT-UP)	URBAN (BUILT-UP)
TERRAIN	LEVEL	LEVEL
ACCESS CONTROL	FULL CONTROL	NONE

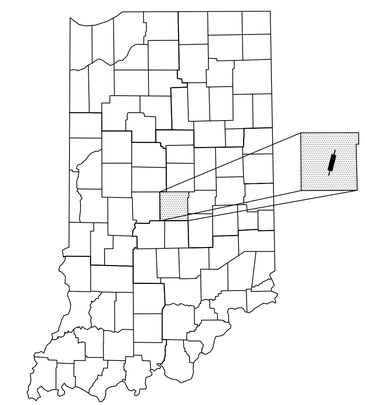

PROJECT LOCATION SHOWN BY

LATITUDE: 39°46'15" N LONGITUDE: 86°08'34" W

BRIDGE LENGTH :	0.019 MI.
ROADWAY LENGTH :	SEE ROAD PLANS
TOTAL LENGTH :	SEE ROAD PLANS
MAX GRADE :	2.83%

HUC: 05120201130020

END PROJECT No. 1600808
STATION 25+75.00 LINE "P_ALG_I65"

END PROJECT No. 1600808
STATION 41+85.70 LINE "P_ALG_I70"

R. 3 E. | R. 4 E.

T. 16 N.

T. 15 N.

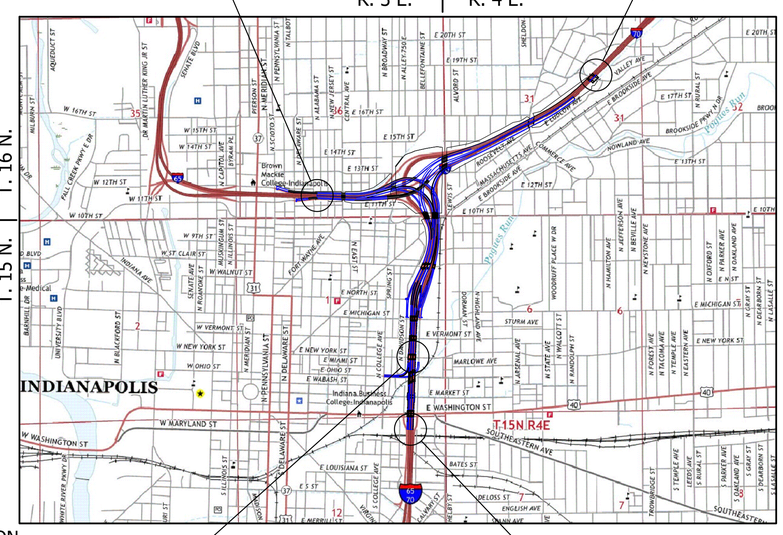

SCALE: 1" = 2000'

PROJECT LOCATION
BRIDGE FILE No. I65-111-10607 NBL
I-65 / I-70 N.B. OVER NEW YORK STREET
STA. 132+14.65 LINE "P_ALG_I65-I70"

LOCATION MAP
MARION COUNTY

BEGIN PROJECT No. 1600808
STATION 113+00.00 LINE "P_ALG_I65/I70"

INDIANA DEPARTMENT OF TRANSPORTATION
STANDARD SPECIFICATIONS DATED 2020 TO
BE USED WITH THESE PLANS.

SUPERIOR CONSTRUCTION

PLANS PREPARED BY: Butler Fairman and Seufert Inc. (317)713-4615 PHONE

CERTIFIED BY: . DATE

APPROVED FOR LETTING: . INDIANA DEPARTMENT OF TRANSPORTATION DATE

BRIDGE FILE	
I65-111-10607 NBL	
DESIGNATION	
1901856	
SURVEY BOOK	SHEET
ELECTRONIC	1 OF 14
CONTRACT	PROJECT
B-36910	1600808

6412

\\bfsnt241\Jobs5\641200.0000\ProDevelopment\Design\Drawings\BRIDGES\04 OVER NY STREET\Structure 1901856\1901856_S_BR_TITL01.dwg Dylan Piercefield Plot:2/24/2020 5:58 AM Save:2/21/2020 10:42 AM

UTILITIES

REVISIONS

SHEET NO.	DATE	REVISED

KIN PROJECT INFORMATION

DESIGNATION	PROJECT DESCRIPTION	
1600808	COMPLETE ROAD RECONSTRUCTION OF I-65/I-70 FROM WASHINGTON STREET TO I-65 OVER DELAWARE STREET AND I-70 OVER VALLEY AVENUE	LEAD DES
1901935	ITS FOR I-65/I-70 FROM WASHINGTON STREET TO I-65 OVER DELAWARE STREET AND I-70 OVER VALLEY AVENUE	
1901936	SIGNS, LIGHTING, SIGNALS AND MARKING FOR I-65/I-70 FROM WASHINGTON STREET TO I-65 OVER DELAWARE STREET AND I-70 OVER VALLEY AVENUE	
1901847	BRIDGE REPLACEMENT ON I-65/I-70 NB OVER WASHINGTON STREET	
1901848	BRIDGE REPLACEMENT ON I-65/I-70 SB OVER WASHINGTON STREET	
1901849	BRIDGE REPLACEMENT ON I-65/I-70 SB CD OVER WASHINGTON STREET	
1901850	BRIDGE REPLACEMENT ON I-65/I-70 NB OVER MARKET STREET	
1901851	BRIDGE REPLACEMENT ON I-65/I-70 SB OVER MARKET STREET	
1901852	BRIDGE REPLACEMENT ON I-65/I-70 SB CD OVER MARKET STREET	
1901853	BRIDGE REPLACEMENT ON I-65/I-70 NB OVER CSX RAILROAD & OHIO STREET	
1901854	BRIDGE REPLACEMENT ON I-65/I-70 SB OVER CSX RAILROAD & OHIO STREET	
1901855	BRIDGE REPLACEMENT ON I-65/I-70 SB CD OVER CSX RAILROAD & OHIO STREET	
1901856	BRIDGE REPLACEMENT ON I-65/I-70 NB OVER NEW YORK STREET	
1901857	BRIDGE REPLACEMENT ON I-65/I-70 SB OVER NEW YORK STREET	
1901858	BRIDGE REPLACEMENT ON I-65/I-70 SB CD OVER NEW YORK STREET	
1901861	BRIDGE REPLACEMENT ON I-65/I-70 SB CD OVER VERMONT STREET	
1901862	BRIDGE REPLACEMENT ON I-65 NB & I-70 EB OVER MICHIGAN STREET	
1901863	BRIDGE REPLACEMENT ON I-65 SB/I-70 WB OVER MICHIGAN STREET	
1901864	BRIDGE REPLACEMENT ON I-65/I-70 SB CD OVER MICHIGAN STREET	
1901865	BRIDGE REPLACEMENT ON I-65 NB OVER I-70 EB ENTRANCE RAMP	
1901881	BRIDGE REPLACEMENT ON I-65 NB OVER ST. CLAIR STREET	
1901889	NEW BRIDGE CONSTRUCTION ON I-70 EB OVER ST. CLAIR STREET	
1901892	BRIDGE REPLACEMENT ON I-65 SB/I-70 WB OVER ST. CLAIR STREET	
1901896	NEW BRIDGE CONSTRUCTION ON SB CD OVER ST. CLAIR STREET	
1901897	BRIDGE REPLACEMENT ON I-65 NB OVER EAST 10TH STREET	
1901899	NEW BRIDGE CONSTRUCTION ON I-70 EB OVER EAST 10TH STREET	
1901901	BRIDGE REPLACEMENT ON I-65 SB OVER EAST 10TH STREET	
1901903	BRIDGE REPLACEMENT ON I-70 WB OVER EAST 10TH STREET	
1901905	NEW BRIDGE CONSTRUCTION ON SB CD & RAMP OVER EAST 10TH STREET	
1901906	NEW BRIDGE CONSTRUCTION ON I-65 NB CD EXIT RAMP OVER CENTRAL AVENUE	
1901907	BRIDGE REPLACEMENT ON I-65 NB OVER CENTRAL AVENUE	
1901908	BRIDGE REPLACEMENT ON I-65 SB OVER CENTRAL AVENUE	
1901909	NEW BRIDGE CONSTRUCTION ON I-65 SB CD ENTRANCE RAMP OVER CENTRAL AVE.	
1901914	BRIDGE REPLACEMENT ON I-70 WB TO I-65 NB OVER COLLEGE AVENUE	
1901915	BRIDGE REPLACEMENT ON I-65 NB & PENNSYLVANIA EXIT RAMP OVER COLLEGE AVENUE	
1901917	BRIDGE REPLACEMENT ON I-65 SB & SB CD RAMP OVER COLLEGE AVENUE	
1901918	BRIDGE REPLACEMENT ON I-65 SB & DELAWARE ENTRANCE RAMP TO I-70 EB OVER COLLEGE AVENUE & FIVE RAMPS	
1901919	BRIDGE REPLACEMENT ON I-65 NB OVER I-70 WB & RAMP	
1901920	BRIDGE REPLACEMENT ON I-70 WB TO I-65 NB OVER THREE RAMPS	
1901921	BRIDGE REPLACEMENT ON I-65 SB OVER I-70 WB & SB CD RAMP	
1901922	NEW BRIDGE CONSTRUCTION ON I-70 EB OVER I-65 NB	
1901923	BRIDGE REPLACEMENT ON I-70 WB & SB CD OVER LEWIS STREET & MONON TRAIL	
1901925	NEW BRIDGE CONSTRUCTION ON I-70 WB TO I-65 NB OVER LEWIS STREET & MONON TRAIL	
1901927	NOT USED	
1901928	BRIDGE REPLACEMENT ON I-70 EB OVER LEWIS STREET & MONON TRAIL	
1901929	PREVENTATIVE MAINTENANCE ON I-70 WB OVER ROOSEVELT AT COMMERCE AVENUE	
1901930	PREVENTATIVE MAINTENANCE ON I-70 EB OVER ROOSEVELT AT COMMERCE AVENUE	
1901931	PREVENTATIVE MAINTENANCE ON I-70 WB OVER VALLEY AVENUE	
1901932	PREVENTATIVE MAINTENANCE ON I-70 EB OVER VALLEY AVENUE	
1901933	REHABILITATE AND WIDEN ON I-65 OVER 7 STREETS, ACCESS RD, MONORAIL (AKA "MONSTER BRIDGE") - PENNSYLVANIA EXIT RAMP	
1901934	REHABILITATE AND WIDEN ON I-65 OVER 7 STREETS, ACCESS RD, MONORAIL (AKA "MONSTER BRIDGE") - DELAWARE ENTRANCE RAMP	
1902179	BRIDGE REPLACEMENT ON I-65 NB/I70 EB OVER VERMONT STREET	
1902180	BRIDGE REPLACEMENT ON I-65 SB/I70 WB OVER VERMONT STREET	

INDEX

SHEET NO.	DESIGNATION
1	TITLE
2	INDEX
3	MAINTENANCE OF TRAFFIC
4	LAYOUT
5	GENERAL PLAN - PLAN & ELEVATION VIEWS
6	GENERAL PLAN - TYPICAL SECTION
7	BENTS NO. 1 AND NO. 2 DETAILS
8	BENT DETAILS
9	FRAMING PLAN
10	BEAM DETAILS
11	FLOOR DETAILS
12	APPROACH SLAB
13	WALL LAYOUT
14	WALL LAYOUT

RECOMMENDED FOR APPROVAL: _____ DESIGN ENGINEER _____ DATE

DESIGNED: B. WRIGHT DRAWN: K. COFFMAN

CHECKED: M. EICHENAUER CHECKED: B. WRIGHT

INDIANA
DEPARTMENT OF TRANSPORTATION

INDEX

HORIZONTAL SCALE	BRIDGE FILE
N/A	I65-111-10607 NBL
VERTICAL SCALE	DESIGNATION
N/A	1901856
SURVEY BOOK	SHEET
ELECTRONIC	2 OF 14
CONTRACT	PROJECT
B-36910	1600808

6412

BFS NO.

\\bfsnt241\jobs5\641200.0000\ProjDevelopment\Design\Drawings\BRIDGES\04 OVER NY STREET\Structure 1901856\1901856_S_BR_IND01.dwg Dylan Piercefield Plot: 2/24/2020 7:43 AM Save: 2/17/2020 4:22 PM

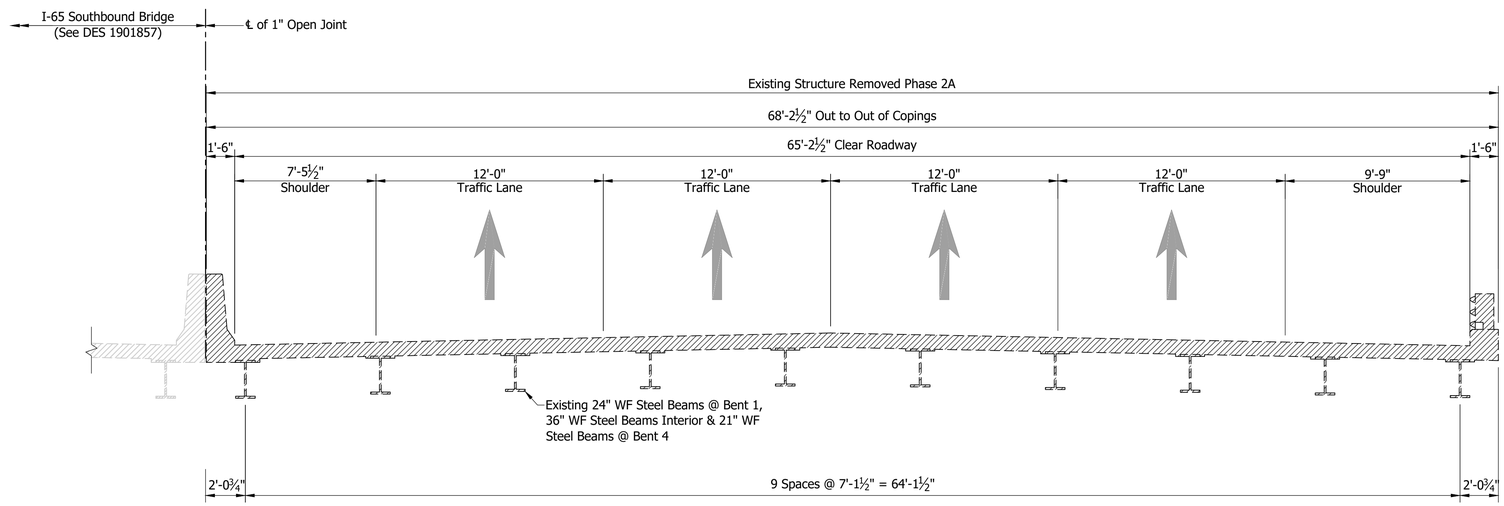

EXISTING NORTHBOUND TYPICAL SECTION

Scale: 1/4"= 1'-0"

LEGEND

Limits of Removal

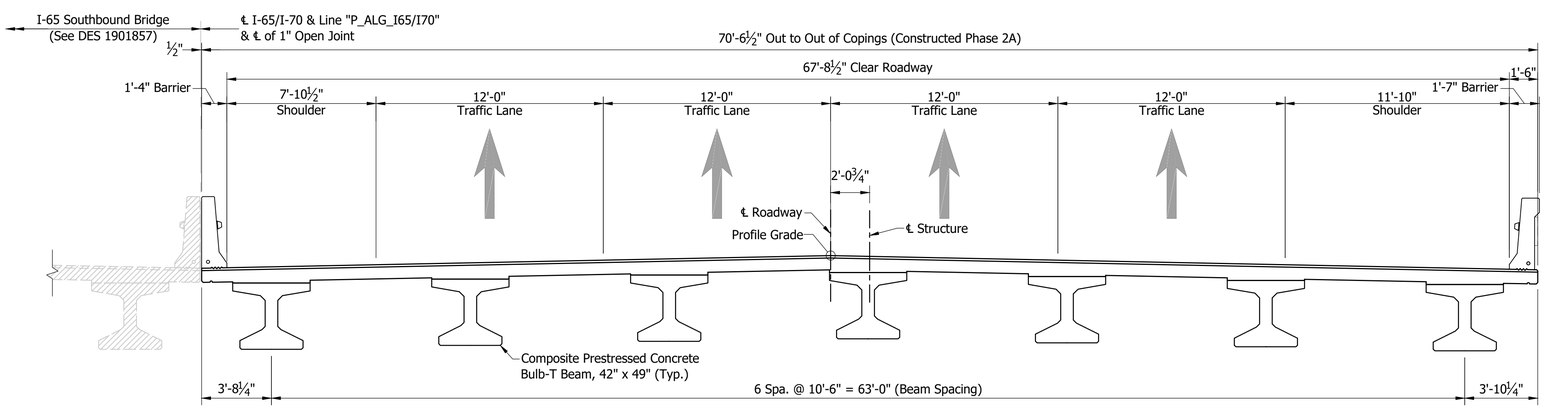

PROPOSED NORTHBOUND TYPICAL SECTION

Scale: 1/4"= 1'-0"

	RECOMMENDED FOR APPROVAL: DESIGN ENGINEER DATE	INDIANA DEPARTMENT OF TRANSPORTATION	HORIZONTAL SCALE: As Noted	BRIDGE FILE: I65-111-10607 NBL
			VERTICAL SCALE: N/A	DESIGNATION: 1901856
	DESIGNED: B. WRIGHT DRAWN: M. SCOTT	MAINTENANCE OF TRAFFIC	SURVEY BOOK: ELECTRONIC	SHEET: 3 OF 14
	CHECKED: M. EICHENAUER CHECKED: B. WRIGHT		CONTRACT: B-36910	PROJECT: 1600808

BFS NO. 6412

\\bfsn1241\vbs5\641200.0000\Pro Development\Design\Drawings\BRIDGES\04 OVER NY STREET\Structure 1901856\1901856_S_BR_MOT01.dwg Dylan Piercefield Plot:2/24/2020 5:59 AM Save:2/5/2020 12:58 PM

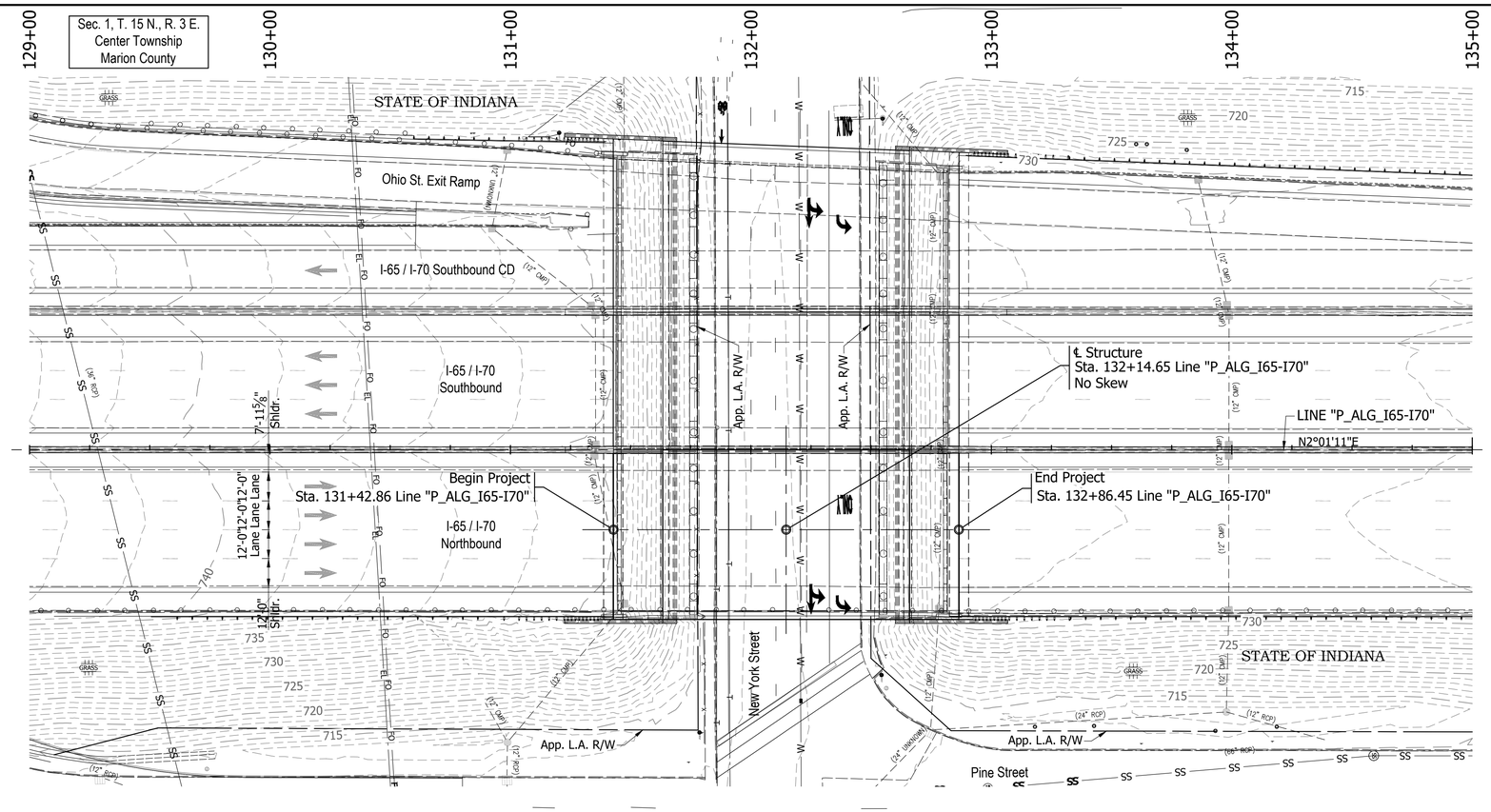

EXISTING STRUCTURE

The existing structure was built in 1974. Structure was rehabilitated in 2003. The structure is a 3-span continuous composite steel beam.

Span lengths: 1 @ 31'-0", 1 @ 79'-0", 1 @ 26'-0"

Clear roadway 65'-2½". Total length of 139'-6"

Existing structure to be removed.

Existing plans are on file with the Indiana Department of Transportation under Bridge File No. I-65-112-5730.

EARTHWORK TABULATION

See Roadway Plans (DES #_____) for earthwork tabulation.

NOTE: ALL TOPOGRAPHY INFORMATION REFERENCED TO LINE "P_ALG_I65-I70" UNLESS NOTED.

ALL R/W ON THIS SHEET DESCRIBED FROM LINE "P_ALG_I65-I70" UNLESS OTHERWISE NOTED

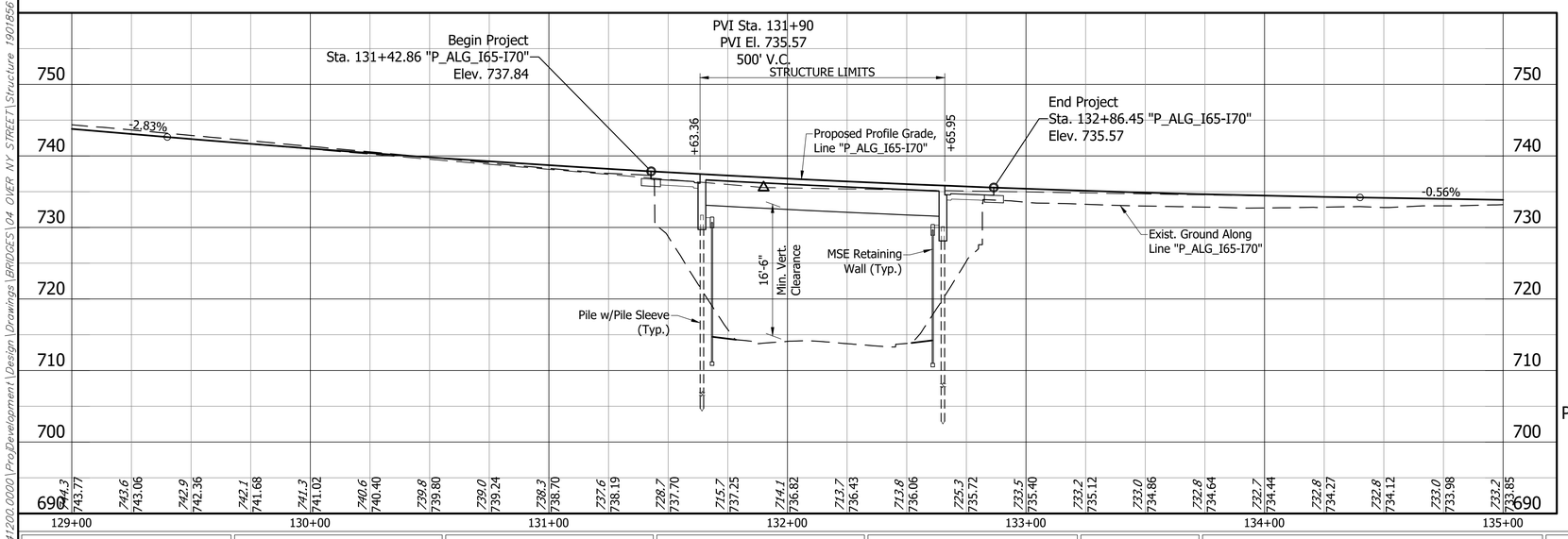

Notes:

1. For R/W and property information, see Location Control Route Survey (DES # _____).
2. For alignment data, see Geometric Layout Sheets (DES #_____).
3. See Road Plans (DES #_____) for Horizontal & Vertical Control Data.

PRESTRESSED COMPOSITE CONCRETE BULB-TEE BEAM BRIDGE
1 SPAN: 101'-0"
67'-8 1/2" CLEAR ROADWAY; SKEW: NO SKEW
I-65 / I-70 N.B. OVER NEW YORK STREET
MARION COUNTY

RECOMMENDED FOR APPROVAL: _____ DESIGN ENGINEER _____ DATE

DESIGNED: B. WRIGHT | DRAWN: L. KIRSCH
CHECKED: V. SATHIRAJU | CHECKED: B. WRIGHT

INDIANA
DEPARTMENT OF TRANSPORTATION

LAYOUT

HORIZONTAL SCALE	BRIDGE FILE
1" = 30'	I65-111-10607 NBL
VERTICAL SCALE	DESIGNATION
1" = 10'	1901856
SURVEY BOOK	SHEET
ELECTRONIC	4 OF 14
CONTRACT	PROJECT
B-36910	1600808

BFS NO. 6412

\\bfsn1241\Jobs5\641200.0000\ProjDevelopment\Design\Drawings\BRIDGES\04 OVER NY STREET\Structure 1901856\1901856_S_BR_LAY01.dwg Dylan Piercefield Plot:2/24/2020 7:46 AM Save:2/24/2020 7:46 AM

STRUCTURE TO BE BUILT ON A 500' VERTICAL CURVE

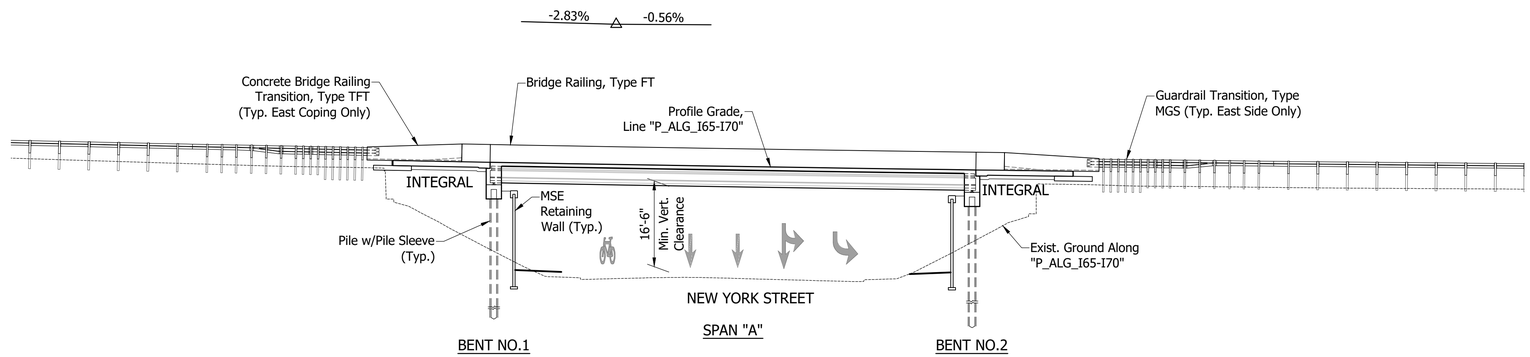

ELEVATION

Scale: 1/16" = 1'-0"

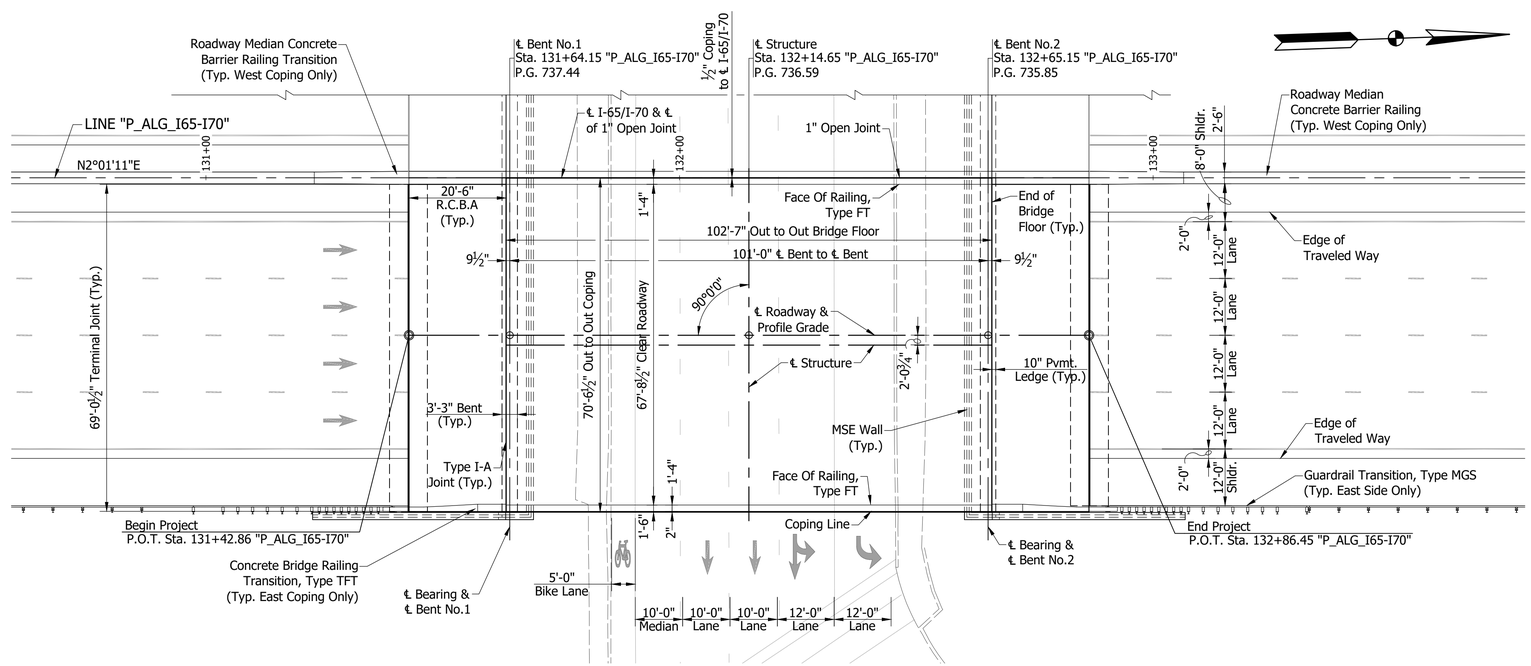

PLAN

Scale: 1/16" = 1'-0"

NOTE:
See Sheet 6 For Typical Section

PRESTRESSED COMPOSITE CONCRETE BULB-TEE BEAM BRIDGE
1 SPAN: 101'-0"
67'-8 1/2" CLEAR ROADWAY; SKEW: NO SKEW
I-65 / I-70 N.B. OVER NEW YORK STREET
MARION COUNTY

RECOMMENDED FOR APPROVAL: DESIGN ENGINEER DATE	INDIANA DEPARTMENT OF TRANSPORTATION	HORIZONTAL SCALE: As Noted	BRIDGE FILE: I65-111-10607 NBL
		VERTICAL SCALE: N/A	DESIGNATION: 1901856
DESIGNED: B. WRIGHT DRAWN: L. KIRSCH	LAYOUT	SURVEY BOOK: ELECTRONIC	SHEET: 5 OF 14
CHECKED: V. SATHIRAJU CHECKED: B. WRIGHT		CONTRACT: B-36910	PROJECT: 1600808

BFS NO. 6412

\\bfsnt241\Jobs5\641200.0000\ProjDevelopment\Design\Drawings\BRIDGES\04 OVER NY STREET\Structure 1901856\1901856_S-BR_PLN01.dwg Dylan Fiercefield Plot:2/24/2020 7:43 AM Save:2/24/2020 7:41 AM

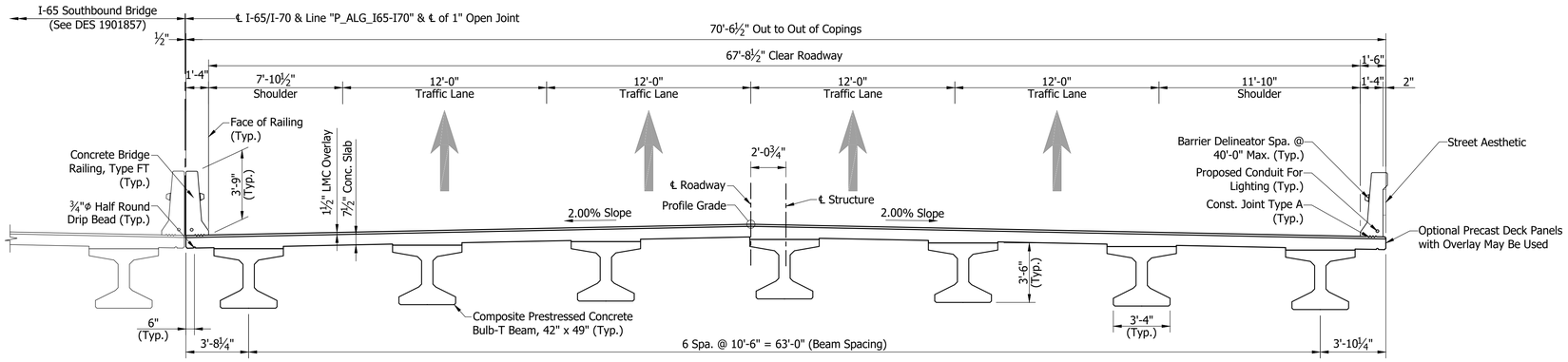

TYPICAL SECTION

Scale: 1/4"= 1'-0"

GENERAL NOTES

The existing structure shall be removed.

Reinforcing bars covering shall be 3 ½" in top and 1" min. in bottom of floor slabs and 3" in footings except bottom steel which shall be 4", and 2" in all other parts, unless noted.

Concrete in floor slab, and diaphragms, barriers, and end bents shall be an alternate Class C in accordance with the Technical Provisions.

Reinforcing Bars in Deck, Barrier, and End Bent Diaphragm Extending into the Deck shall be Stainless Steel. Reinforcing Bars in End Bent Diaphragm not Extending into the Deck and in the Cap shall be Epoxy Coated.

All exposed faces of the MSE walls and reinforced concrete bridge approach slabs shall receive surface seal.

See Bridge Aesthetic Plan for Architectural Details.

DESIGN DATA

LIVE LOAD:

Superstructure and Substructure Designed for HL-93 loading in accordance with the AASHTO LRFD Bridge Design Specifications, 8th Edition, 2017 and its subsequent revisions.

DEAD LOAD:

Designed for Actual Dead Load plus 35 psf of future wearing surface, and 15 psf for SIP Metal Deck Forms.

FLOOR SLAB:

Slab designed with a 7 ½" structural depth and a 1 ½" very early strength LMC wearing surface.

DESIGN STRESSES

CONSTRUCTION LOADING:

The exterior girder has been checked for strength, deflection, and overturning using the construction loads shown below. Cantilever overhang brackets were assumed for support of the deck overhang past the edge of the exterior beam. The finishing machine was assumed to be supported 6 in. outside the vertical coping form. The top overhang brackets were assumed to be located 6 in. past the edge of the vertical coping form. The bottom overhang brackets were assumed to be braced against the intersection of the girder bottom flange and web.

DECK FALSEWORK LOADS:

Designed for 15 psf for permanent metal stay-in-place deck forms, removable deck forms, and 2 ft. exterior walkway.

CONSTRUCTION LIVE LOAD:

Designed for 20 psf extending 2 ft. past the edge of coping and 75 lb/ft vertical force applied at a distance of 6 in. outside the face of coping over a 30 foot length of the deck centered with the finishing machine.

FINISHING-MACHINE LOAD:

4500 lb distributed over 10 ft. along the coping.

WIND LOAD:

Designed for 70 mph horizontal wind load in accordance with LRFD 3.8.1.

ULTIMATE DESIGN STRENGTHS:

Class "A" Concrete	f'c = 3,500 p.s.i.
Class "B" Concrete	f'c = 3,000 p.s.i.
Class "C" Concrete	f'c = 4,000 p.s.i.
Reinforcing Steel (Grade 60)	Fy = 60,000 p.s.i. (barrier)
	Fy = 75,000 p.s.i. (deck)
	Fy = 75,000 p.s.i. (all other locations)

SEISMIC DESIGN DATA:

Seismic Site Class	C
PGA (g)	0.051
S_s (g)	0.12
S_1 (g)	0.051
S_{D1} (g)	0.086
Seismic Design Category	A

PRESTRESSED COMPOSITE CONCRETE BULB-TEE BEAM BRIDGE
1 SPAN: 101'-0"
67'-8 1/2" CLEAR ROADWAY; SKEW: NO SKEW
I-65 / I-70 N.B. OVER NEW YORK STREET
MARION COUNTY

RECOMMENDED FOR APPROVAL: _____ DESIGN ENGINEER _____ DATE

DESIGNED: B. WRIGHT DRAWN: L. KIRSCH
CHECKED: V. SATHIRAJU CHECKED: B. WRIGHT

INDIANA
DEPARTMENT OF TRANSPORTATION

GENERAL PLAN - TYPICAL SECTION

HORIZONTAL SCALE	BRIDGE FILE
As Noted	I65-111-10607 NBL
VERTICAL SCALE	DESIGNATION
N/A	1901856
SURVEY BOOK	SHEET
ELECTRONIC	6 OF 14
CONTRACT	PROJECT
B-36910	1600808

6412
BFS NO.

\\bfsn\241\Jobs5\641200.0000\ProjDevelopment\Design\Drawings\BRIDGES\04_OVER_NY_STREET\Structure_1901856\1901856_S_BR_PLN02.dwg Dylan Piercefield Plot: 2/24/2020 5:59 AM Save: 2/20/2020 9:47 AM

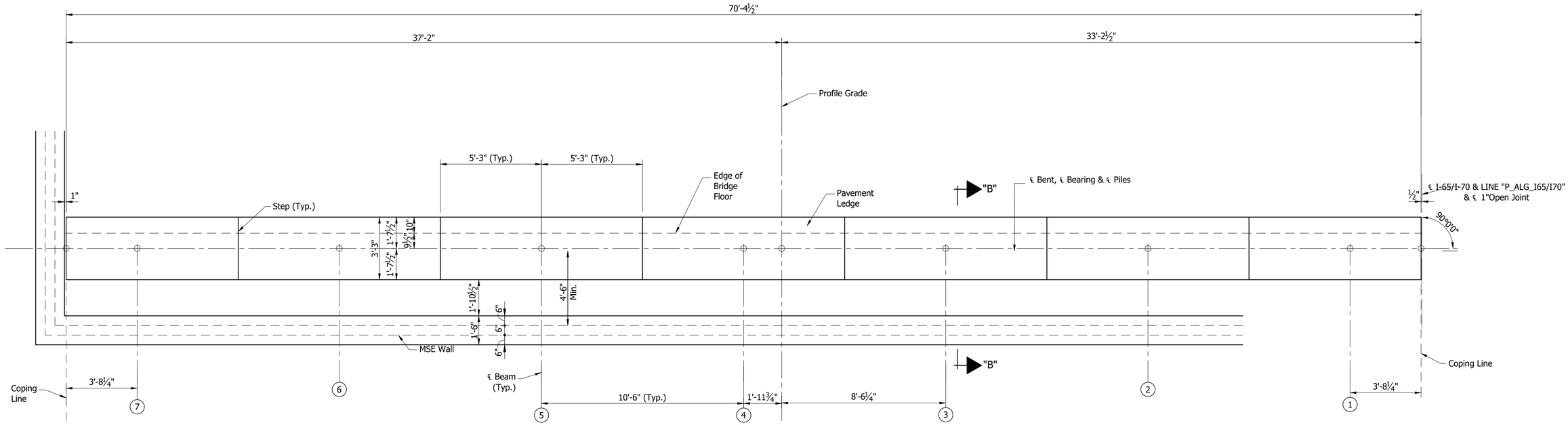

PLAN
BENT NO.1 NB (SHOWN)
BENT NO.2 NB (OPP. HAND)

Scale: ⅜"=1'-0"

SEAT ELEVATIONS

Beam No.	7	6	5	4	3	2	1
Bent No.1	732.14	732.35	732.56	732.77	732.56	732.35	732.14
Bent No.2	730.41	730.62	730.88	731.09	730.88	730.67	730.41

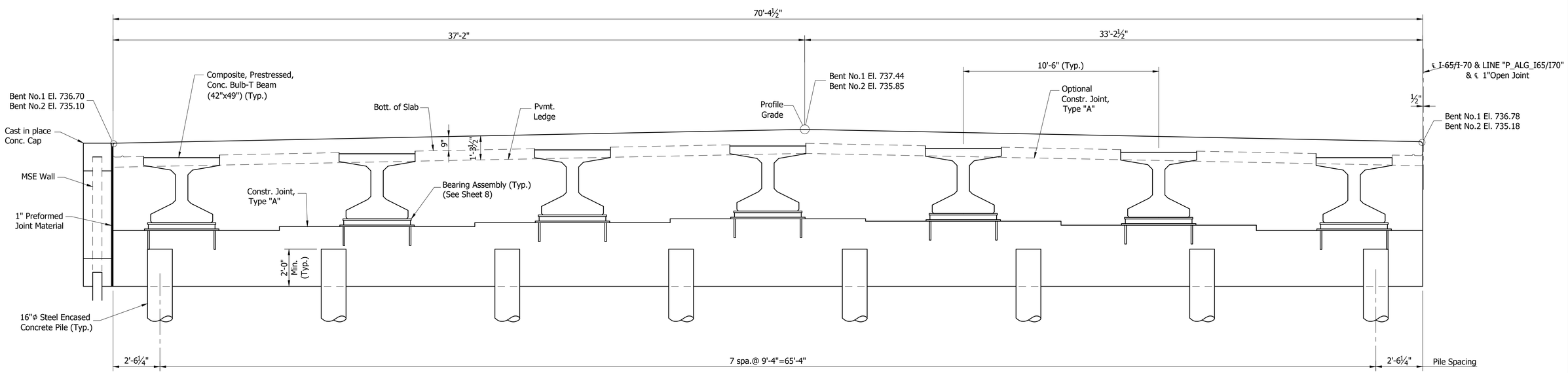

SECTION ALONG ℄ BENT

Scale: ⅜"=1'-0"

RECOMMENDED FOR APPROVAL: _____ DESIGN ENGINEER _____ DATE

DESIGNED: B. WRIGHT DRAWN: D. SHEETZ

CHECKED: V. SATHIRAJU CHECKED: B. WRIGHT

INDIANA
DEPARTMENT OF TRANSPORTATION

BENTS NO. 1 AND NO. 2 DETAILS

HORIZONTAL SCALE	BRIDGE FILE
As Noted	I65-111-10607 NBL
VERTICAL SCALE	DESIGNATION
N/A	1901856
SURVEY BOOK	SHEET
ELECTRONIC	7 OF 14
CONTRACT	PROJECT
B-36910	1600808

6412

BFS NO.

\\bfsn1241\jobs5\641200.0000\Proj\Development\Design\Drawings\BRIDGES\04 OVER NY STREET\Structure 1901856\1901856_S_BR_BWT01.dwg Dylan Piercefield Plot:2/24/2020 11:31 AM Save:2/24/2020 11:27 AM

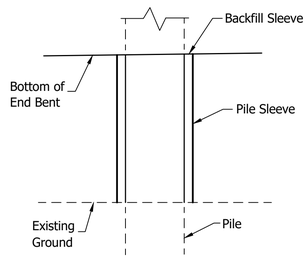

PILE SLEEVE DETAIL

Not to Scale

⊛ As an alternate a ⅞"⌀x1'-3" Long Headed Automatic Welded Stud may be used.

⊗ Setting Tolerance of Bottom Plate-Level with to not more than 1/16" below top of Concrete.

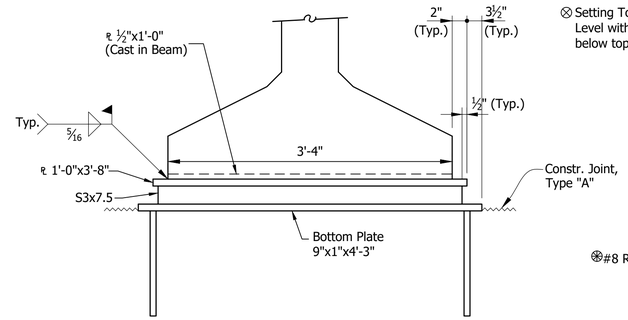

ELEVATION

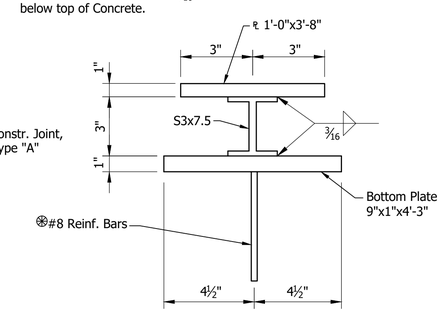

SECTION

BEARING ASSEMBLY

Not to Scale

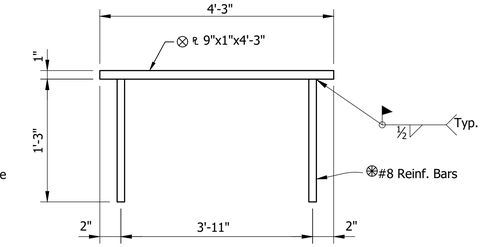

BOTTOM PLATE DETAIL

Not to Scale

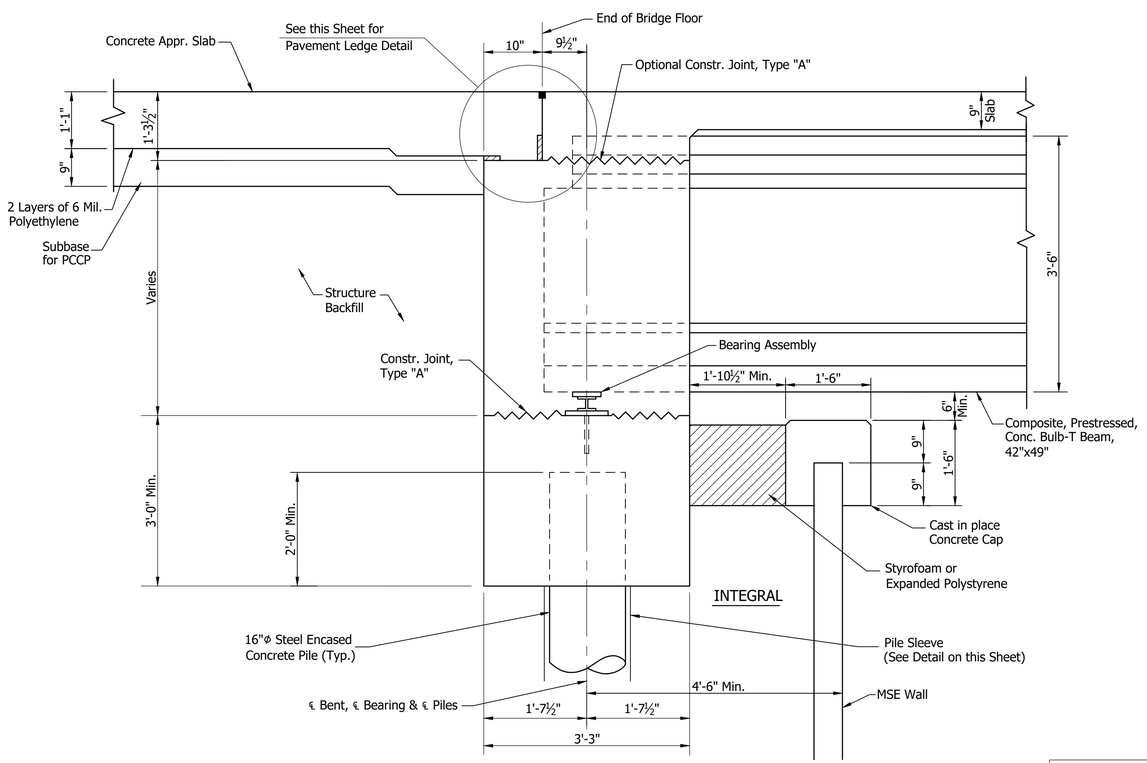

SECTION "B-B"

Not to Scale

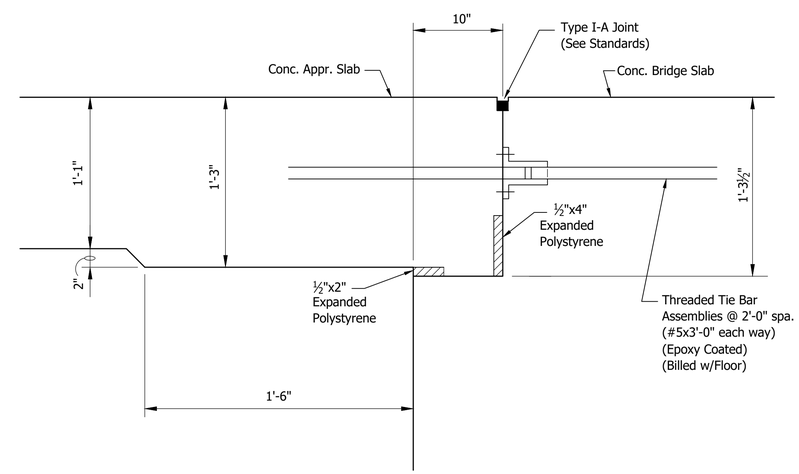

PAVEMENT LEDGE DETAIL

Not to Scale

RECOMMENDED FOR APPROVAL: _____ DESIGN ENGINEER DATE	INDIANA DEPARTMENT OF TRANSPORTATION	HORIZONTAL SCALE: As Noted	BRIDGE FILE: I65-111-10607 NBL
		VERTICAL SCALE: N/A	DESIGNATION: 1901856
DESIGNED: B. WRIGHT DRAWN: D. SHEETZ	BENT DETAILS	SURVEY BOOK: ELECTRONIC	SHEET: 8 OF 14
CHECKED: V. SATHIRAJU CHECKED: B. WRIGHT		CONTRACT: B-36910	PROJECT: 1600808

BFS NO. 6412

\\bfsnt241\jobs5\641200.0000\Proj\Development\Design\Drawings\BRIDGES\04 OVER NY STREET\Structure 1901856\1901856_S_BR BENT DETAIL.dwg Dylan Piercefield Plot: 2/24/2020 6:00 AM Save: 2/17/2020 4:15 PM

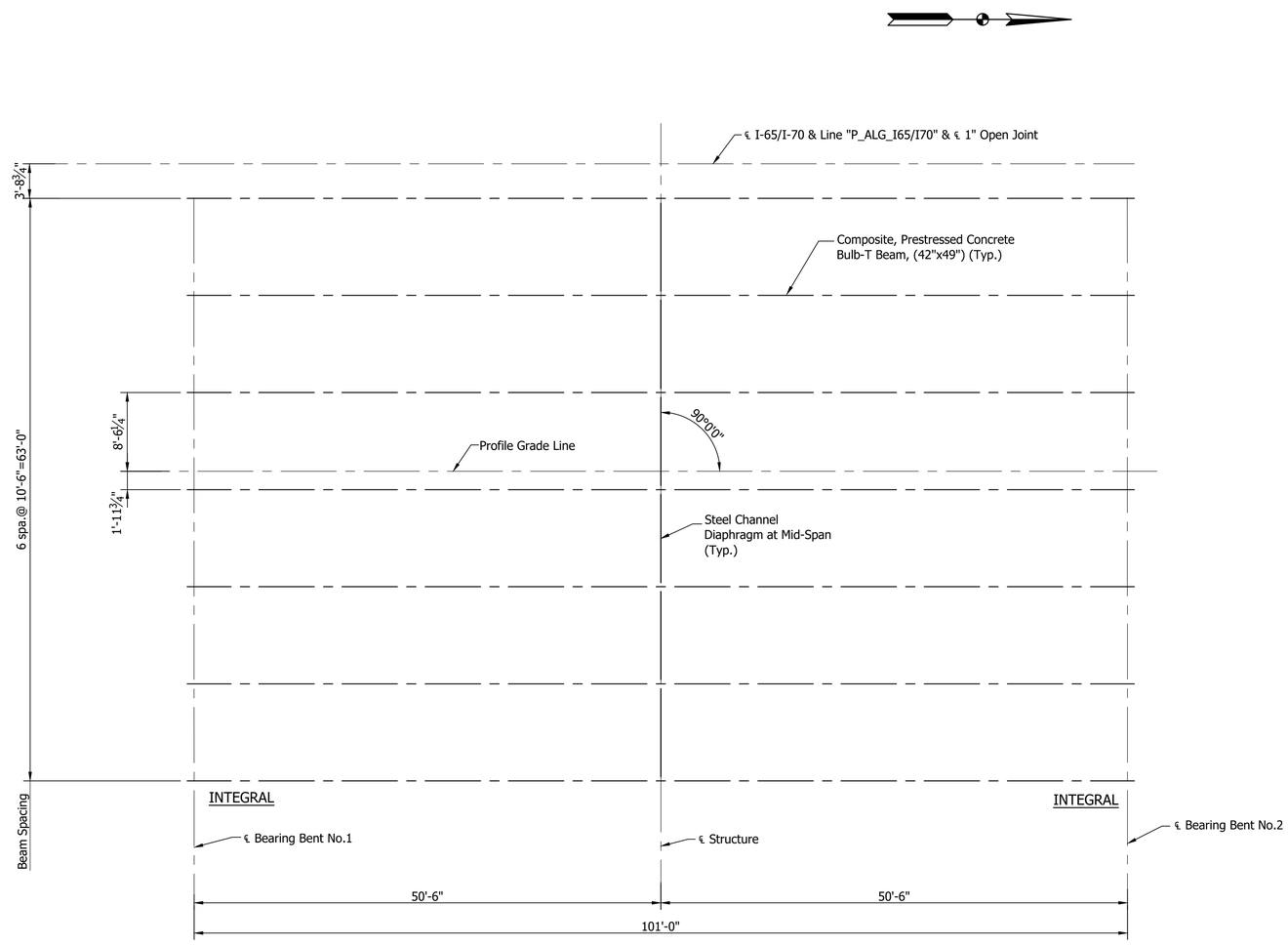

BEAM ERECTION PLAN

Scale: 1/8" = 1'-0"

RECOMMENDED FOR APPROVAL: DESIGN ENGINEER DATE	INDIANA DEPARTMENT OF TRANSPORTATION	HORIZONTAL SCALE: As Noted	BRIDGE FILE: I65-111-10607 NBL	6412
		VERTICAL SCALE: N/A	DESIGNATION: 1901856	
DESIGNED: V. SATHIRAJU DRAWN: D. SHEETZ	FRAMING PLAN	SURVEY BOOK: ELECTRONIC	SHEET: 9 OF 14	BFS NO.
CHECKED: B. WRIGHT CHECKED: M. MATEL		CONTRACT: B-36910	PROJECT: 1600808	

\\bfsn1241\jobs5\641200.0000\ProjDevelopment\Design\Drawings\BRIDGES\04 OVER NY STREET\Structure 1901856\1901856_S_BR_FRM01.dwg Dylan Piercefield Plot-2/24/2020 6:00 AM Save:12/23/2019 9:34 AM

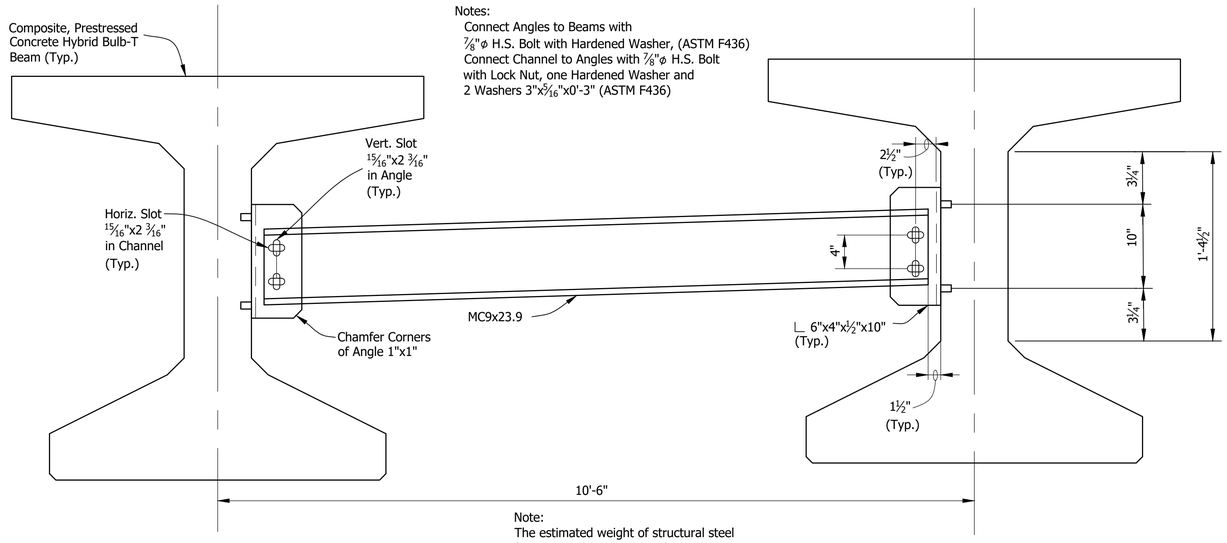

Note:
The estimated weight of structural steel for one Diaphragm is 305 Lbs.

ELEVATION

Not to Scale

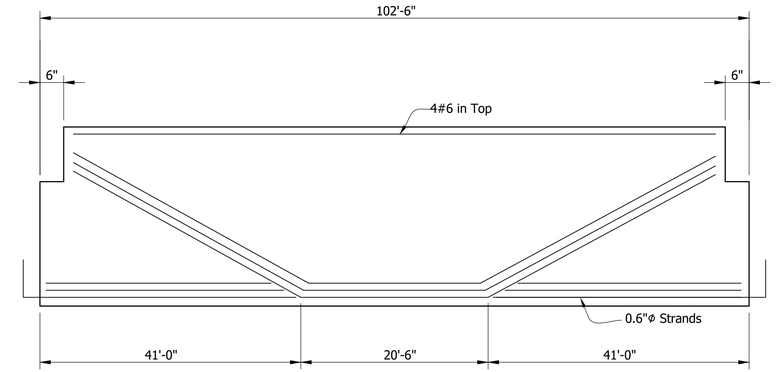

BEAM ELEVATION
SPAN "A" (SHOWN)
SHOWING DRAPED STRANDS

Not to Scale

✳ Denotes Epoxy Coated

Note:
Bars 1" Clear unless noted.

1. Surface Seal req'd on top of all Beams and Exterior Face of Exterior Beams
2. 1"φ Holes or ¾"φ Inserts for Dowels at Bent or Pier. (See Beam Plans)
3. PL ½"x12"x3'-2½" at End Bent Ends only

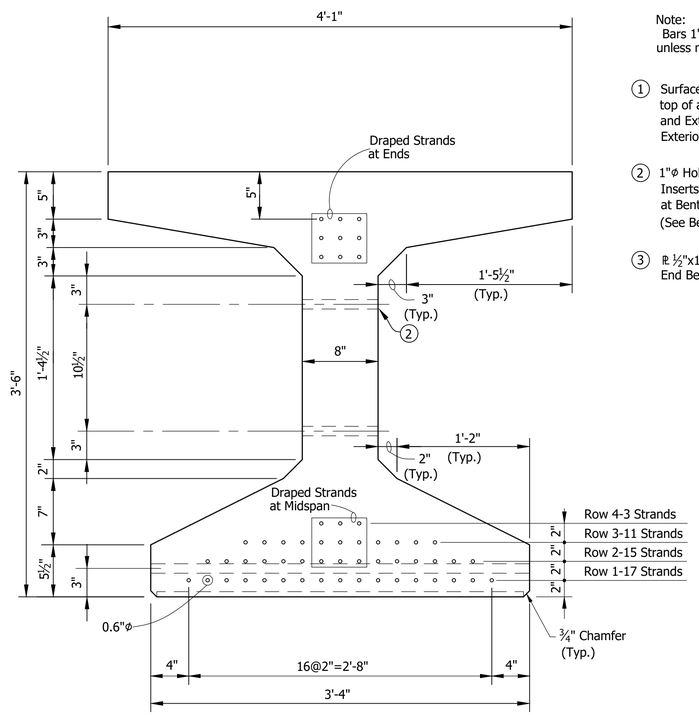

SECTION SHOWING STRANDS

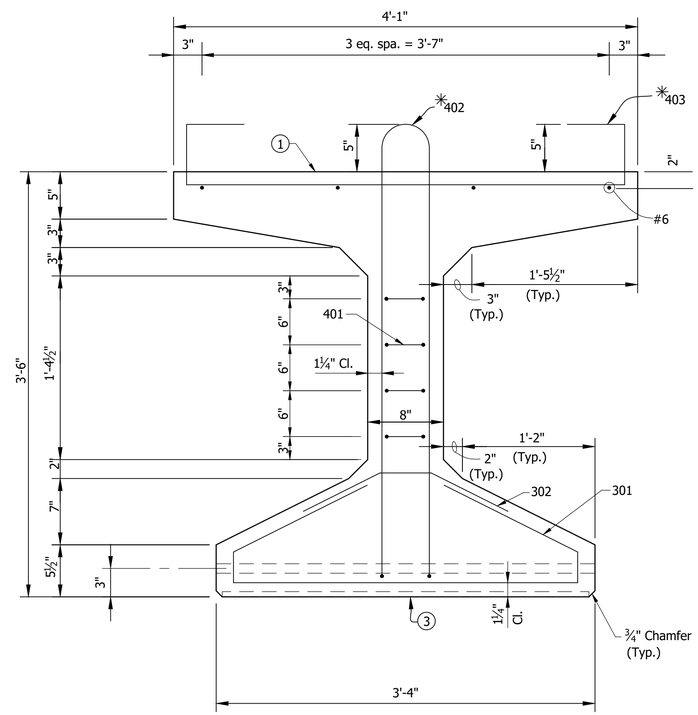

SECTION SHOWING REINFORCING

BEAM SECTIONS

Not to Scale

RECOMMENDED FOR APPROVAL: DESIGN ENGINEER DATE	INDIANA DEPARTMENT OF TRANSPORTATION	HORIZONTAL SCALE: As Noted	BRIDGE FILE: I65-111-10607 NBL
		VERTICAL SCALE: N/A	DESIGNATION: 1901856
DESIGNED: V. SATHIRAJU DRAWN: K. COFFMAN	BEAM DETAILS	SURVEY BOOK: ELECTRONIC	SHEET: 10 OF 14
CHECKED: B. WRIGHT CHECKED: B. WRIGHT		CONTRACT: B-36910	PROJECT: 1600808

BFS NO. 6412

\\bfsnt241\jobs5\641200.0000\ProjDevelopment\Design\Drawings\BRIDGES\04 OVER NY STREET\Structure 1901856\1901856_S_BR_BMD01.dwg Dylan Piercefield Plot:2/24/2020 6:00 AM Save:11/20/2019 9:56 AM

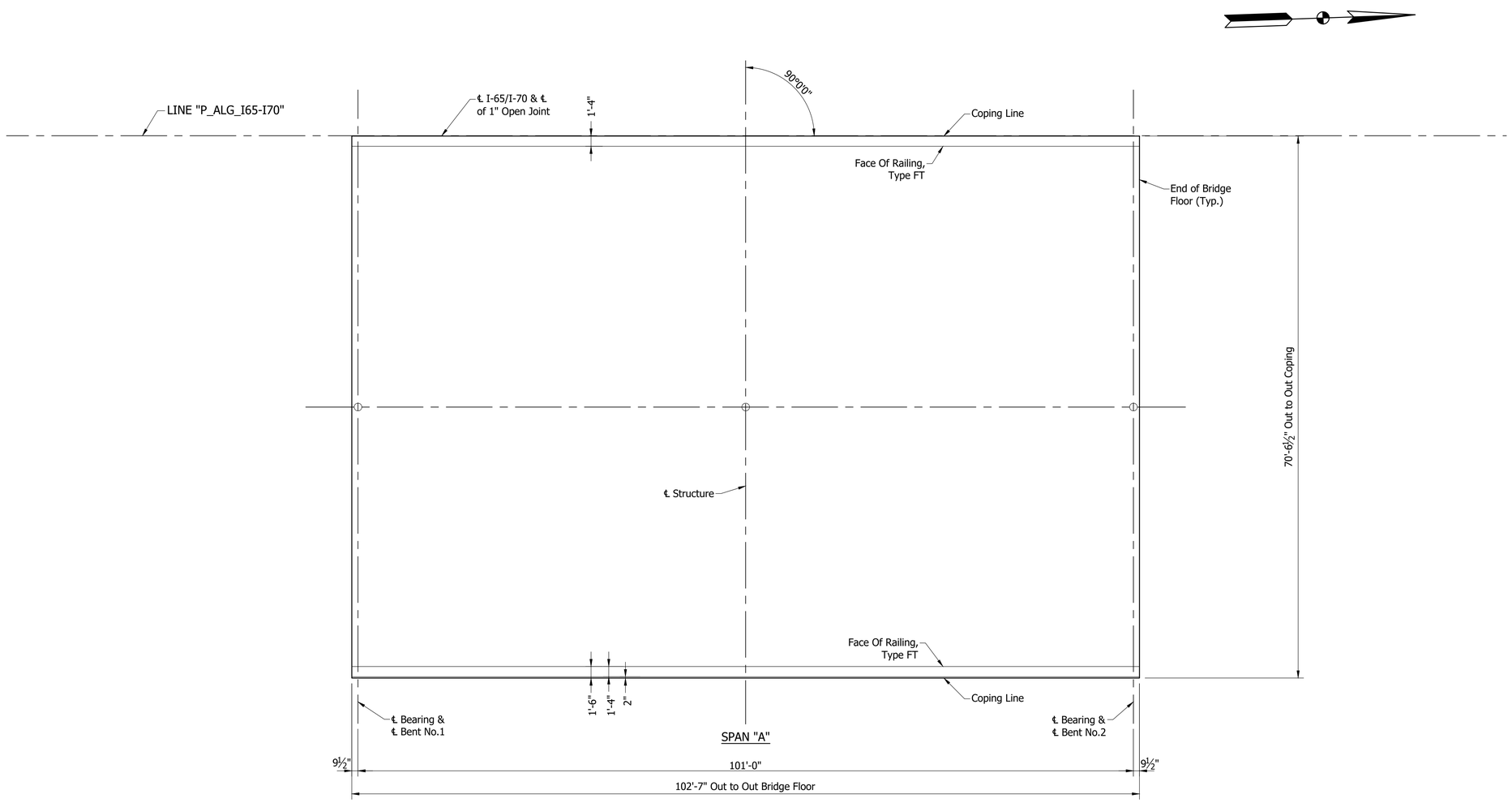

FLOOR PLAN

Scale: 1/8" = 1'-0"

NOTE:
See Sheet ___ For _____

	RECOMMENDED FOR APPROVAL: _____ DESIGN ENGINEER _____ DATE	INDIANA DEPARTMENT OF TRANSPORTATION	HORIZONTAL SCALE: As Noted	BRIDGE FILE: I65-111-10607 NBL
			VERTICAL SCALE: N/A	DESIGNATION: 1901856
	DESIGNED: B. WRIGHT DRAWN: D. PIERCEFIELD	FLOOR DETAILS	SURVEY BOOK: ELECTRONIC	SHEET: 11 OF 14
	CHECKED: M. EICHENAUER CHECKED: B. WRIGHT		CONTRACT: B-36910	PROJECT: 1600808

6412

BFS NO.

\\bfsn1241\Jobs5\641200.0000\ProjDevelopment\Design\Drawings\BRIDGES\04 OVER NY STREET\Structure 1901856\1901856_S_BR_FLR01.dwg Dylan Piercefield Plot:2/24,2020 6:00 AM Save:1/31,2020 6:44 AM

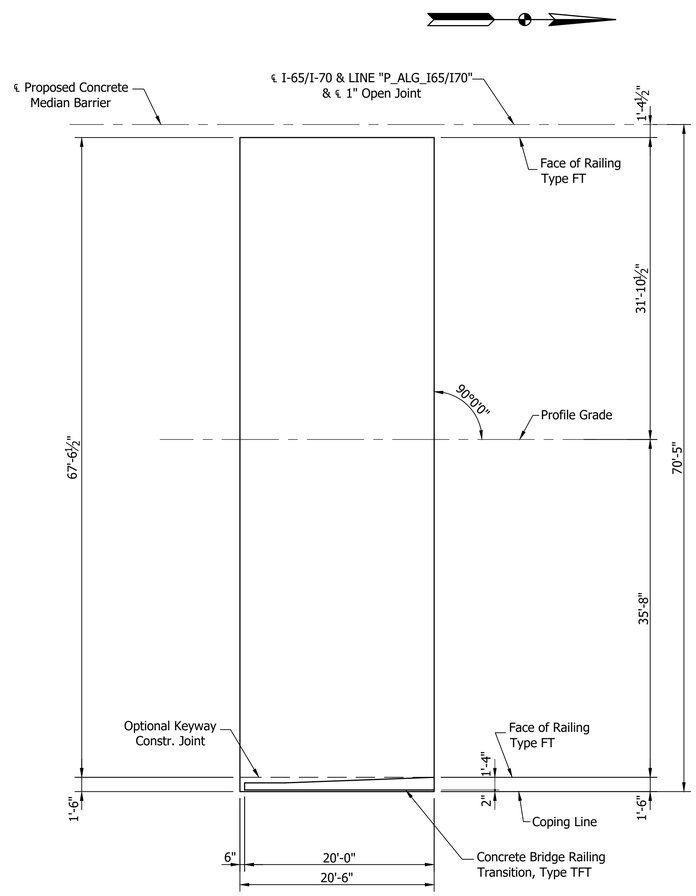

PLAN
SOUTH SLAB (SHOWN)
NORTH SLAB (OPP. HAND)
Scale: ⅛"=1'-0"

RECOMMENDED FOR APPROVAL: DESIGN ENGINEER DATE	INDIANA DEPARTMENT OF TRANSPORTATION	HORIZONTAL SCALE: As Noted	BRIDGE FILE: I65-111-10607 NBL	
		VERTICAL SCALE: N/A	DESIGNATION: 1901856	
DESIGNED: D. SHEETZ DRAWN: D. SHEETZ	APPROACH SLAB	SURVEY BOOK: ELECTRONIC	SHEET: 12 OF 14	
CHECKED: B. WRIGHT CHECKED: M. MATEL		CONTRACT: B-36910	PROJECT: 1600808	

BFS NO. 6412

\\bsn1241\jobs5\641200.0000\ProjDevelopment\Design\Drawings\BRIDGES\04 OVER NY STREET\Structure 1901856\1901856_S_BR_AP501.dwg Dylan Piercefield Plot-2/24/2020 6:00 AM Save:1/28/2020 9:58 AM

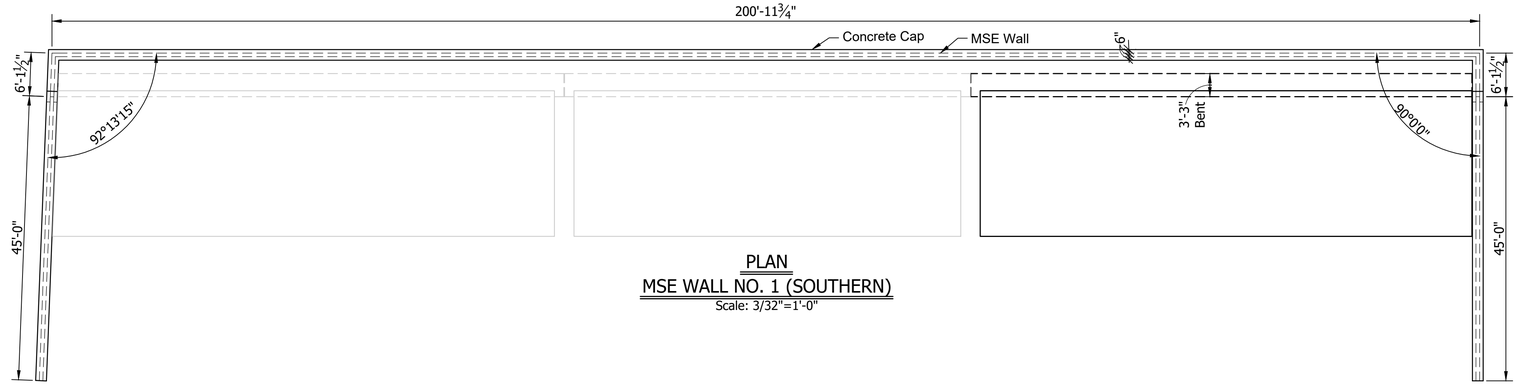

PLAN
MSE WALL NO. 1 (SOUTHERN)
Scale: 3/32"=1'-0"

NOTE:
Elevation Looking At Back Face of Wall

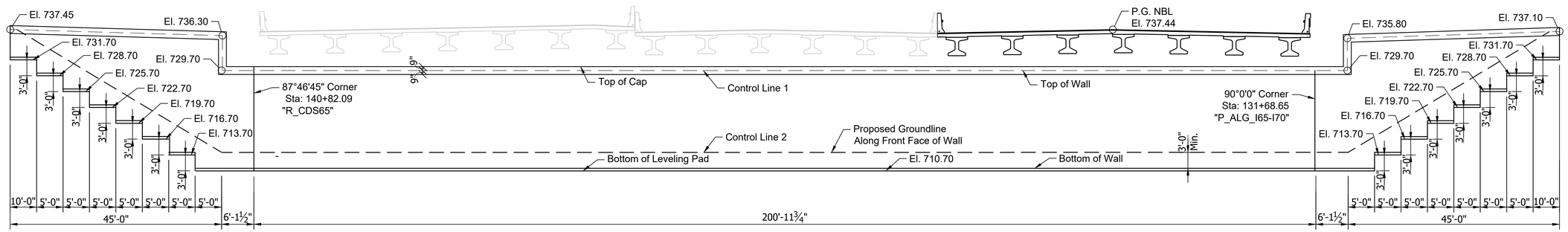

ELEVATION
MSE WALL NO. 1 (SOUTHERN)
Scale: 3/32"=1'-0"

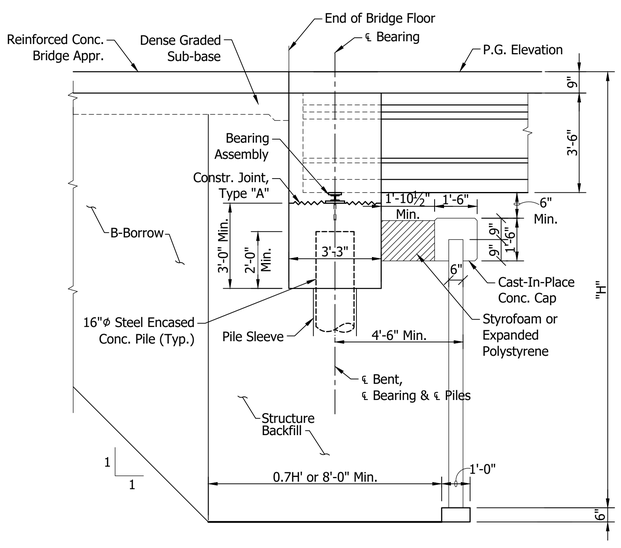

SECTION
MSE WALL NO. 1
Scale: 3/8"=1'-0"

RECOMMENDED FOR APPROVAL: DESIGN ENGINEER DATE	INDIANA DEPARTMENT OF TRANSPORTATION	HORIZONTAL SCALE: As Noted	BRIDGE FILE: I65-111-10607 NBL	
		VERTICAL SCALE: N/A	DESIGNATION: 1901856	
DESIGNED: B. WRIGHT DRAWN: D. PIERCEFIELD	WALL LAYOUT	SURVEY BOOK: ELECTRONIC	SHEET: 13 OF 14	6412
CHECKED: M. EICHENAUER CHECKED: B. WRIGHT		CONTRACT: B-36910	PROJECT: 1600808	BFS NO.

\\bfsnt241\Job5\641200.0000\Pro\Development\Design\Drawings\BRIDGES\04 OVER NY STREET\Structure 1901856\1901856_S_BR_WL01.dwg Dylan Piercefield Plot:2/24/2020 11:31 AM Save:2/20/2020 12:20 PM

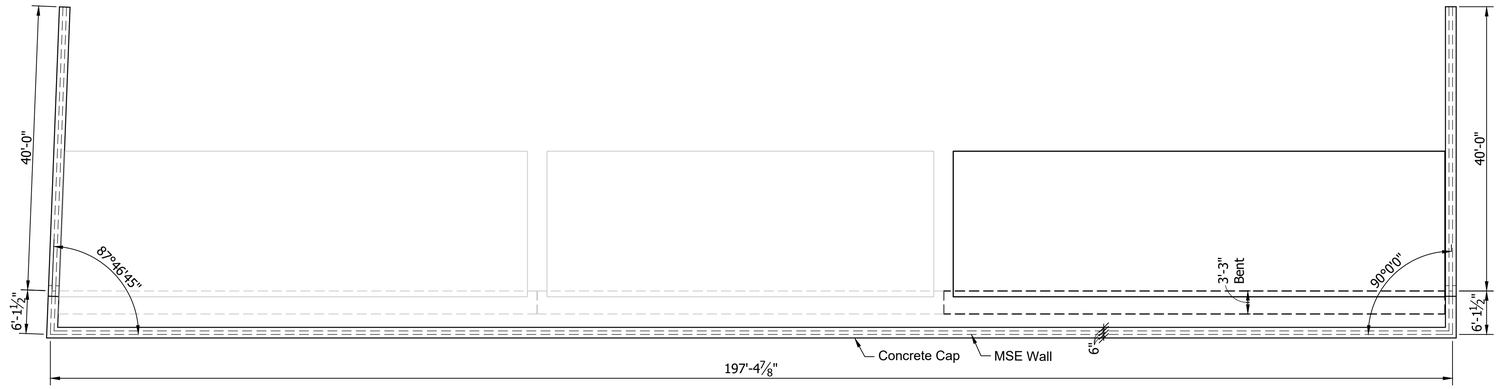

PLAN
MSE WALL NO. 2 (NORTHERN)
Scale: 3/32"=1'-0"

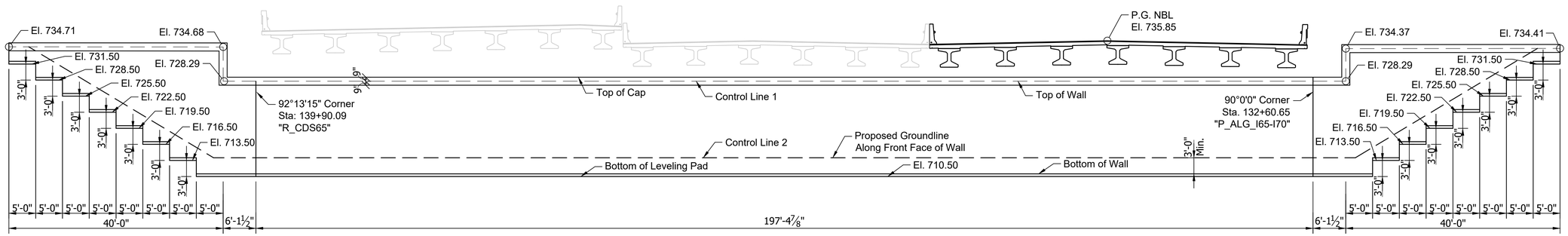

ELEVATION
MSE WALL NO. 2 (NORTHERN)
Scale: 3/32"=1'-0"

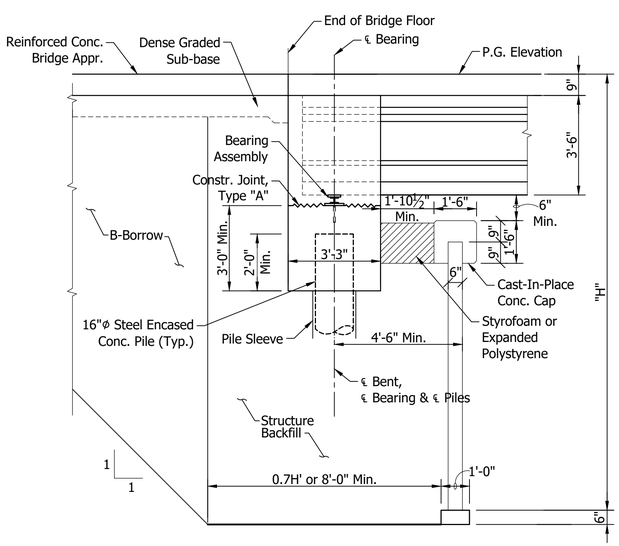

SECTION
MSE WALL NO. 2
Scale: 3/8"=1'-0"

RECOMMENDED FOR APPROVAL: DESIGN ENGINEER DATE	INDIANA DEPARTMENT OF TRANSPORTATION	HORIZONTAL SCALE: AS NOTED	BRIDGE FILE: I65-111-10607 NBL	
		VERTICAL SCALE: AS NOTED	DESIGNATION: 1901856	
DESIGNED: B. WRIGHT DRAWN: D. PIERCEFIELD	WALL LAYOUT	SURVEY BOOK	SHEET	
		ELECTRONIC	14 OF 14	
CHECKED: M. EICHENAUER CHECKED: B. WRIGHT		CONTRACT: B-36910	PROJECT: 1600808	

BFS NO. 6412

\\bfsn\241\Jobs5\641200.0000\ProjDevelopment\Design\Drawings\BRIDGES\04 OVER NV STREET\Structure 1901856\1901856_S_BR_WLL02.dwg Dylan Piercefield Plot:2/24/2020 11:31 AM Save:2/24/2020 11:30 AM

PROJECT	DESIGNATION
1600808	1901857
CONTRACT	BRIDGE FILE
B-36910	I65-111-10608 SBL

STRUCTURE INFORMATION

STRUCTURE	TYPE	SPAN & SKEW	OVER	STATION
I65-111-10608 SBL	PRESTRESSED COMPOSITE CONCRETE BULB-TEE BEAM BRIDGE	1 SPAN: 101'-0" SKEW: NO SKEW	NEW YORK STREET	132+14.65 LINE "P_ALG_I65-I70"

INDIANA DEPARTMENT OF TRANSPORTATION

TRAFFIC DATA	I-65 / I-70 S.B.	NEW YORK STREET
A.D.T. (2021)	58,288 V.P.D.	11,034 V.P.D.
A.D.T. (2041)	64,063 V.P.D.	12,639 V.P.D.
D.H.V. (2041)	5,125 V.P.H.	1,679 V.P.H.
DIRECTIONAL DISTRIBUTION	100 %	61 %
TRUCKS	10 % D.H.V.	2 % D.H.V.
DESIGN DATA		
DESIGN SPEED	55 M.P.H.	25 M.P.H.
PROJECT DESIGN CRITERIA	4R (FREEWAY)	N/A
FUNCTIONAL CLASSIFICATION	URBAN FREEWAY	MINOR ARTERIAL
RURAL/URBAN	URBAN (BUILT-UP)	URBAN (BUILT-UP)
TERRAIN	LEVEL	LEVEL
ACCESS CONTROL	FULL CONTROL	NONE

BRIDGE PLANS

FOR SPANS OVER 20 FEET

ROUTE: I-65 / I-70 S.B. AT: RP 111+49

PROJECT NO. 1600808 P.E.
1600808 CONST.

NO ADDITIONAL RIGHT OF WAY REQUIRED FOR THIS PROJECT

BRIDGE REPLACEMENT ON I-65 / I-70 S.B. OVER NEW YORK STREET
LOCATED 1.19 MILES NORTH OF I-70 (SOUTH SPLIT) INTERCHANGE
SECTION 1, TOWNSHIP 15 NORTH, RANGE 3 EAST
CENTER TOWNSHIP, MARION COUNTY INDIANA

END PROJECT No. 1600808
STATION 25+75.00 LINE "P_ALG_I65"

END PROJECT No. 1600808
STATION 41+85.70 LINE "P_ALG_I70"

R. 3 E. | R. 4 E.

T. 16 N.

T. 15 N.

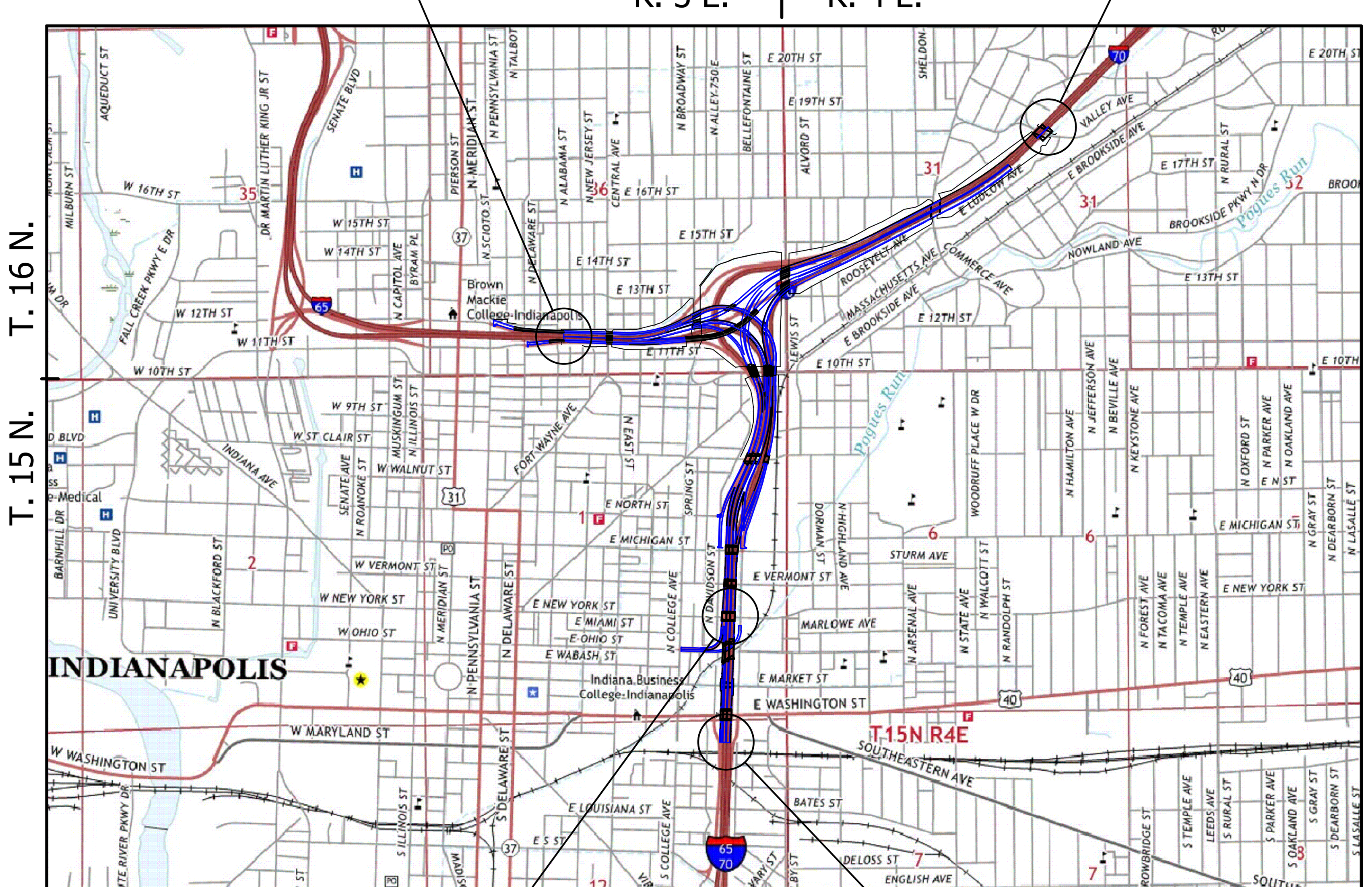

SCALE: 1" = 2000'

PROJECT LOCATION
BRIDGE FILE No. I65-111-10608 SBL
I-65 / I-70 S.B. OVER NEW YORK STREET
STA. 132+14.65 LINE "P_ALG_I65-I70"

LOCATION MAP
MARION COUNTY

BEGIN PROJECT No. 1600808
STATION 113+00.00 LINE "P_ALG_I65/I70"

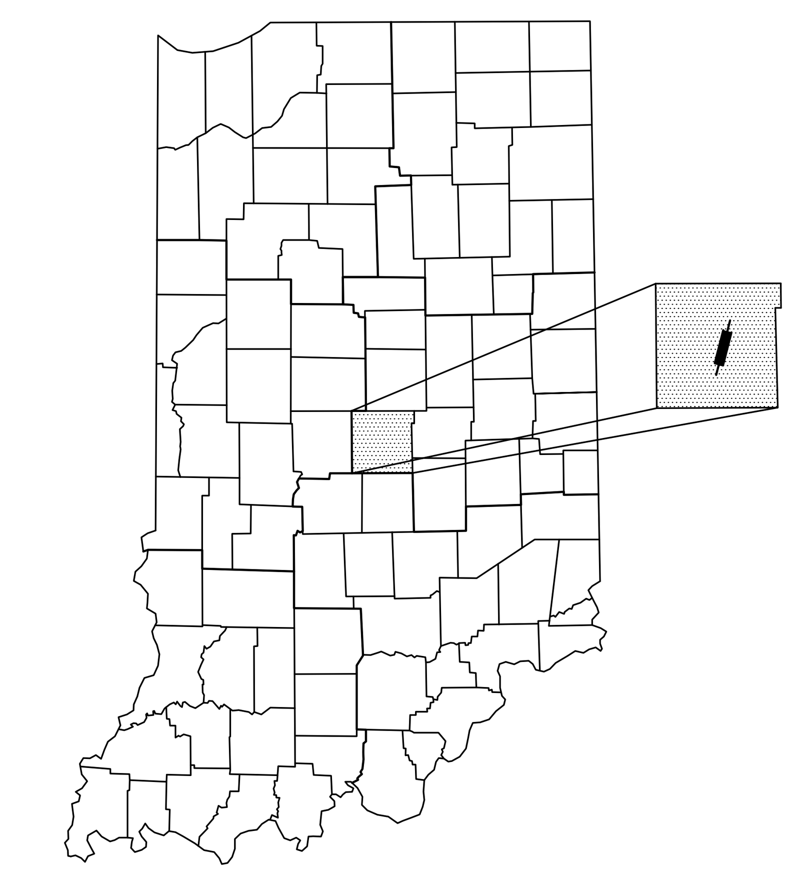

PROJECT LOCATION SHOWN BY

LATITUDE: 39°46'15" N LONGITUDE: 86°08'34" W

BRIDGE LENGTH :	0.020 MI.
ROADWAY LENGTH :	SEE ROAD PLANS
TOTAL LENGTH :	SEE ROAD PLANS
MAX GRADE :	2.83%

HUC: 05120201130020

INDIANA DEPARTMENT OF TRANSPORTATION STANDARD SPECIFICATIONS DATED 2020 TO BE USED WITH THESE PLANS.

SUPERIOR CONSTRUCTION

PLANS PREPARED BY: Butler Fairman and Seufert Inc. (317)713-4615 PHONE

CERTIFIED BY: ________ DATE

APPROVED FOR LETTING: ________ DATE

INDIANA DEPARTMENT OF TRANSPORTATION

	BRIDGE FILE
	I65-111-10608 SBL
	DESIGNATION
	1901857
SURVEY BOOK	SHEET
ELECTRONIC	1 OF 14
CONTRACT	PROJECT
B-36910	1600808

6412

\\bfsnt241\Jobs5\641200.0000\ProjDevelopment\Design\Drawings\BRIDGES\04 OVER NY STREET\Structure 1901857\1901857_S_BR_TTL01.dwg Dylan Piercefield Plot: 2/24/2020 6:01 AM Save: 2/21/2020 10:43 AM

UTILITIES

REVISIONS

SHEET NO.	DATE	REVISED

KIN PROJECT INFORMATION

DESIGNATION	PROJECT DESCRIPTION	
1600808	COMPLETE ROAD RECONSTRUCTION OF I-65/I-70 FROM WASHINGTON STREET TO I-65 OVER DELAWARE STREET AND I-70 OVER VALLEY AVENUE	LEAD DES
1901935	ITS FOR I-65/I-70 FROM WASHINGTON STREET TO I-65 OVER DELAWARE STREET AND I-70 OVER VALLEY AVENUE	
1901936	SIGNS, LIGHTING, SIGNALS AND MARKING FOR I-65/I-70 FROM WASHINGTON STREET TO I-65 OVER DELAWARE STREET AND I-70 OVER VALLEY AVENUE	
1901847	BRIDGE REPLACEMENT ON I-65/I-70 NB OVER WASHINGTON STREET	
1901848	BRIDGE REPLACEMENT ON I-65/I-70 SB OVER WASHINGTON STREET	
1901849	BRIDGE REPLACEMENT ON I-65/I-70 SB CD OVER WASHINGTON STREET	
1901850	BRIDGE REPLACEMENT ON I-65/I-70 NB OVER MARKET STREET	
1901851	BRIDGE REPLACEMENT ON I-65/I-70 SB OVER MARKET STREET	
1901852	BRIDGE REPLACEMENT ON I-65/I-70 SB CD OVER MARKET STREET	
1901853	BRIDGE REPLACEMENT ON I-65/I-70 NB OVER CSX RAILROAD & OHIO STREET	
1901854	BRIDGE REPLACEMENT ON I-65/I-70 SB OVER CSX RAILROAD & OHIO STREET	
1901855	BRIDGE REPLACEMENT ON I-65/I-70 SB CD OVER CSX RAILROAD & OHIO STREET	
1901856	BRIDGE REPLACEMENT ON I-65/I-70 NB OVER NEW YORK STREET	
1901857	BRIDGE REPLACEMENT ON I-65/I-70 SB OVER NEW YORK STREET	
1901858	BRIDGE REPLACEMENT ON I-65/I-70 SB CD OVER NEW YORK STREET	
1901861	BRIDGE REPLACEMENT ON I-65/I-70 SB CD OVER VERMONT STREET	
1901862	BRIDGE REPLACEMENT ON I-65 NB & I-70 EB OVER MICHIGAN STREET	
1901863	BRIDGE REPLACEMENT ON I-65 SB/I-70 WB OVER MICHIGAN STREET	
1901864	BRIDGE REPLACEMENT ON I-65/I-70 SB CD OVER MICHIGAN STREET	
1901865	BRIDGE REPLACEMENT ON I-65 NB OVER I-70 EB ENTRANCE RAMP	
1901881	BRIDGE REPLACEMENT ON I-65 NB OVER ST. CLAIR STREET	
1901889	NEW BRIDGE CONSTRUCTION ON I-70 EB OVER ST. CLAIR STREET	
1901892	BRIDGE REPLACEMENT ON I-65 SB/I-70 WB OVER ST. CLAIR STREET	
1901896	NEW BRIDGE CONSTRUCTION ON SB CD OVER ST. CLAIR STREET	
1901897	BRIDGE REPLACEMENT ON I-65 NB OVER EAST 10TH STREET	
1901899	NEW BRIDGE CONSTRUCTION ON I-70 EB OVER EAST 10TH STREET	
1901901	BRIDGE REPLACEMENT ON I-65 SB OVER EAST 10TH STREET	
1901903	BRIDGE REPLACEMENT ON I-70 WB OVER EAST 10TH STREET	
1901905	NEW BRIDGE CONSTRUCTION ON SB CD & RAMP OVER EAST 10TH STREET	
1901906	NEW BRIDGE CONSTRUCTION ON I-65 NB CD EXIT RAMP OVER CENTRAL AVENUE	
1901907	BRIDGE REPLACEMENT ON I-65 NB OVER CENTRAL AVENUE	
1901908	BRIDGE REPLACEMENT ON I-65 SB OVER CENTRAL AVENUE	
1901909	NEW BRIDGE CONSTRUCTION ON I-65 SB CD ENTRANCE RAMP OVER CENTRAL AVE.	
1901914	BRIDGE REPLACEMENT ON I-70 WB TO I-65 NB OVER COLLEGE AVENUE	
1901915	BRIDGE REPLACEMENT ON I-65 NB & PENNSYLVANIA EXIT RAMP OVER COLLEGE AVENUE	
1901917	BRIDGE REPLACEMENT ON I-65 SB & SB CD RAMP OVER COLLEGE AVENUE	
1901918	BRIDGE REPLACEMENT ON I-65 SB & DELAWARE ENTRANCE RAMP TO I-70 EB OVER COLLEGE AVENUE & FIVE RAMPS	
1901919	BRIDGE REPLACEMENT ON I-65 NB OVER I-70 WB & RAMP	
1901920	BRIDGE REPLACEMENT ON I-70 WB TO I-65 NB OVER THREE RAMPS	
1901921	BRIDGE REPLACEMENT ON I-65 SB OVER I-70 WB & SB CD RAMP	
1901922	NEW BRIDGE CONSTRUCTION ON I-70 EB OVER I-65 NB	
1901923	BRIDGE REPLACEMENT ON I-70 WB & SB CD OVER LEWIS STREET & MONON TRAIL	
1901925	NEW BRIDGE CONSTRUCTION ON I-70 WB TO I-65 NB OVER LEWIS STREET & MONON TRAIL	
1901927	NOT USED	
1901928	BRIDGE REPLACEMENT ON I-70 EB OVER LEWIS STREET & MONON TRAIL	
1901929	PREVENTATIVE MAINTENANCE ON I-70 WB OVER ROOSEVELT AT COMMERCE AVENUE	
1901930	PREVENTATIVE MAINTENANCE ON I-70 EB OVER ROOSEVELT AT COMMERCE AVENUE	
1901931	PREVENTATIVE MAINTENANCE ON I-70 WB OVER VALLEY AVENUE	
1901932	PREVENTATIVE MAINTENANCE ON I-70 EB OVER VALLEY AVENUE	
1901933	REHABILITATE AND WIDEN ON I-65 OVER 7 STREETS, ACCESS RD, MONORAIL (AKA "MONSTER BRIDGE") - PENNSYLVANIA EXIT RAMP	
1901934	REHABILITATE AND WIDEN ON I-65 OVER 7 STREETS, ACCESS RD, MONORAIL (AKA "MONSTER BRIDGE") - DELAWARE ENTRANCE RAMP	
1902179	BRIDGE REPLACEMENT ON I-65 NB/I70 EB OVER VERMONT STREET	
1902180	BRIDGE REPLACEMENT ON I-65 SB/I70 WB OVER VERMONT STREET	

INDEX

SHEET NO.	DESIGNATION
1	TITLE
2	INDEX
3	MAINTENANCE OF TRAFFIC
4	LAYOUT
5	GENERAL PLAN - PLAN & ELEVATION VIEWS
6	GENERAL PLAN - TYPICAL SECTION
7	BENTS NO. 1 AND NO. 2 DETAILS
8	BENT DETAILS
9	FRAMING PLAN
10	BEAM DETAILS
11	FLOOR DETAILS
12	APPROACH SLAB
13	WALL LAYOUT
14	WALL LAYOUT

RECOMMENDED FOR APPROVAL: _____ DESIGN ENGINEER _____ DATE

DESIGNED: B. WRIGHT DRAWN: K. COFFMAN

CHECKED: M. EICHENAUER CHECKED: B. WRIGHT

INDIANA
DEPARTMENT OF TRANSPORTATION

INDEX

HORIZONTAL SCALE	BRIDGE FILE
N/A	I65-111-10608 SBL
VERTICAL SCALE	DESIGNATION
N/A	1901857

SURVEY BOOK	SHEET		
ELECTRONIC	2	OF	14
CONTRACT	PROJECT		
B-36910	1600808		

6412

BFS NO.

\\bfsnt241\jobs5\641200.0000\ProjDevelopment\Design\Drawings\BRIDGES\04 OVER NY STREET\Structure 1901857\1901857_S_BR_IND01.dwg Dylan Piercefield Plot: 2/24/2020 7:50 AM Save: 2/24/2020 7:48 AM

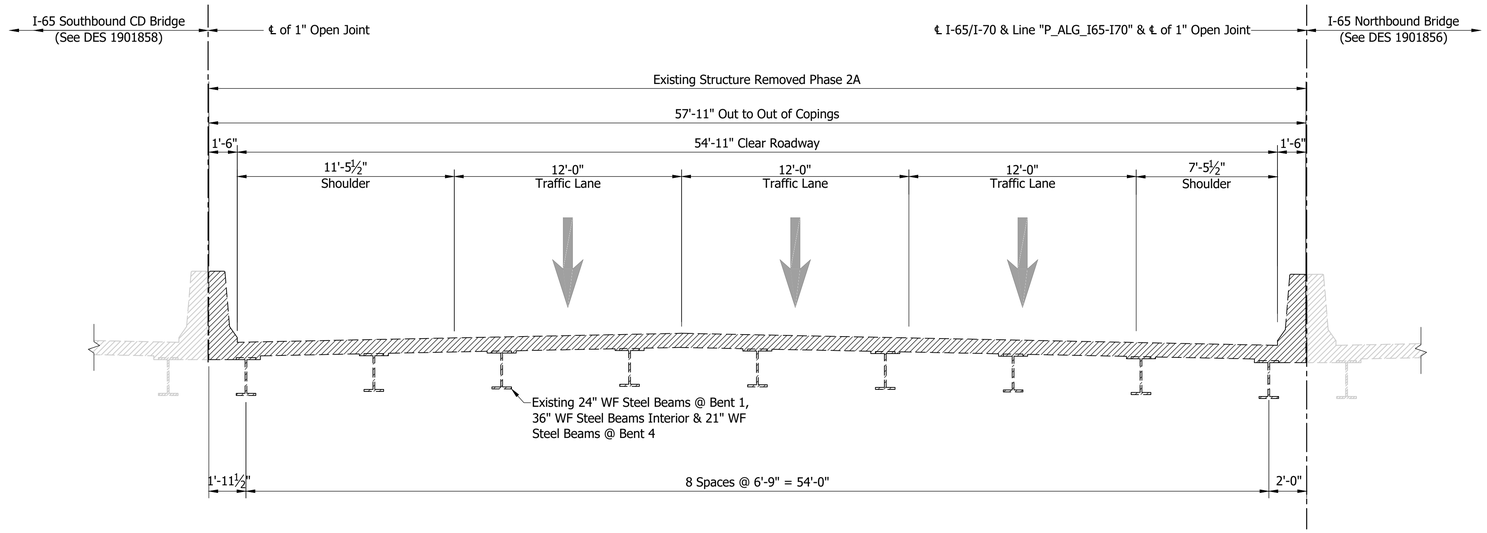

EXISTING SOUTHBOUND TYPICAL SECTION

Scale: 1/4"= 1'-0"

LEGEND

Limits of Removal

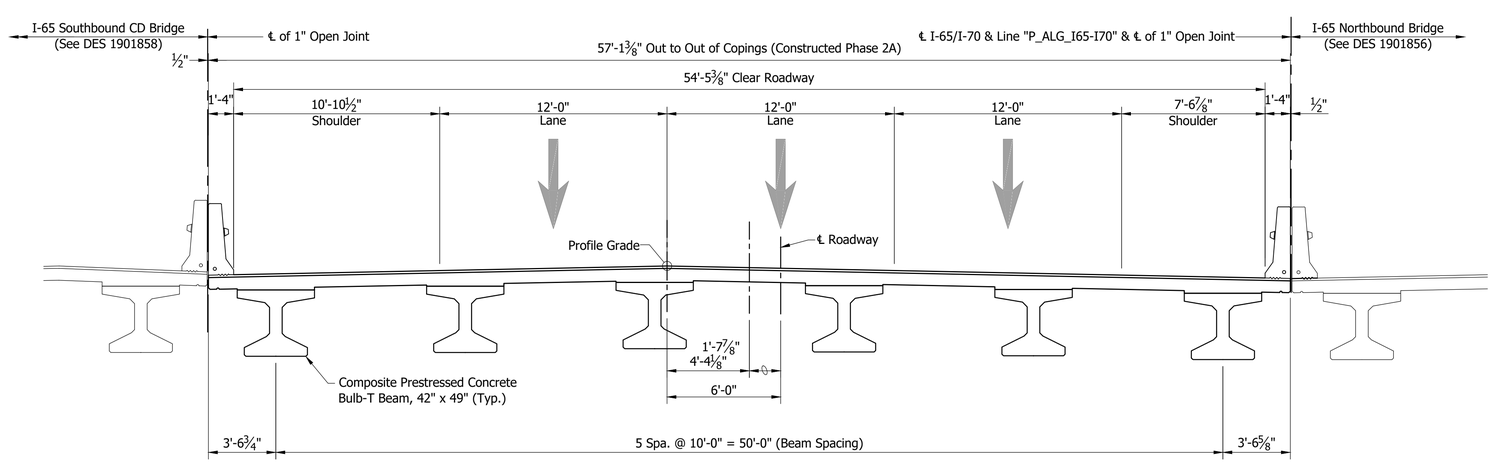

PROPOSED SOUTHBOUND TYPICAL SECTION

Scale: 1/4"= 1'-0"

RECOMMENDED FOR APPROVAL: _____ DESIGN ENGINEER _____ DATE	INDIANA DEPARTMENT OF TRANSPORTATION	HORIZONTAL SCALE: As Noted	BRIDGE FILE: I65-111-10608 SBL	
		VERTICAL SCALE: N/A	DESIGNATION: 1901857	
DESIGNED: B. WRIGHT DRAWN: M. SCOTT	MAINTENANCE OF TRAFFIC	SURVEY BOOK	SHEET	
CHECKED: D. SHEETZ CHECKED: B. WRIGHT		ELECTRONIC	3 OF 14	
		CONTRACT: B-36910	PROJECT: 1600808	

BFS NO. 6412

\\bfsn1241\Jobs5\641200.0000\Proj Development\Design\Drawings\BRIDGES\04 OVER NY STREET\Structure 1901857\1901857_S_BR_MOT01.dwg Dylan Piercefield Plot:2/24/2020 6:02 AM Save:2/6/2020 8:58 AM

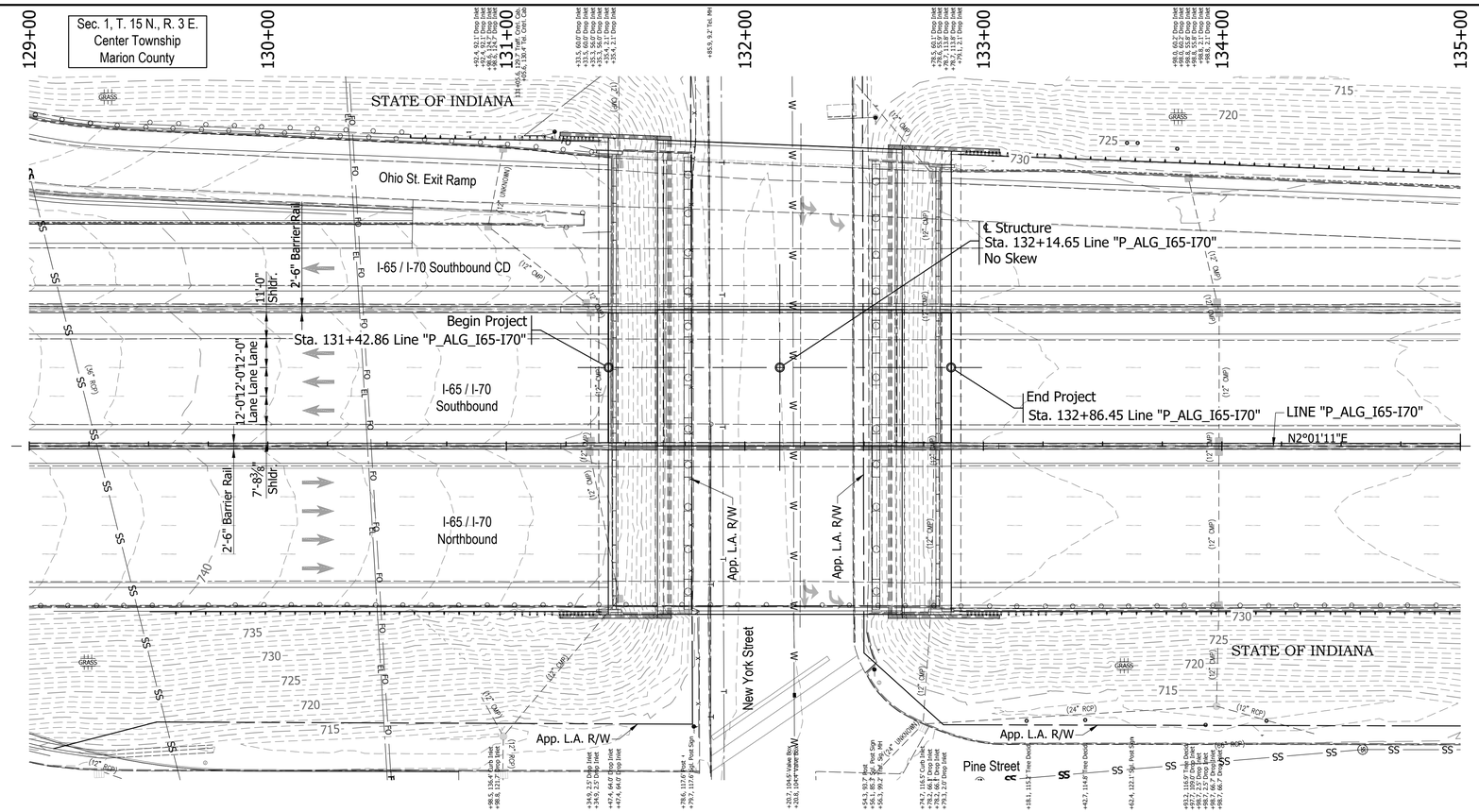

EXISTING STRUCTURE

The existing structure was built in 1974. Structure was rehabilitated in 2003. The structure is a 3-span continuous composite steel beam bridge.

Span lengths: 1 @ 31'-0", 1 @ 79'-0", 1 @ 26'-0"

Clear roadway 54'-11". Total length of 139'-6"

Existing structure to be removed.

Existing plans are on file with the Indiana Department of Transportation under Bridge File No. I-65-112-5730A.

EARTHWORK TABULATION

See Roadway Plans (DES #_____) for earthwork tabulation.

NOTE: ALL TOPOGRAPHY INFORMATION REFERENCED TO LINE "P_ALG_I65-I70" UNLESS NOTED.

ALL R/W ON THIS SHEET DESCRIBED FROM LINE "P_ALG_I65-I70" UNLESS OTHERWISE NOTED

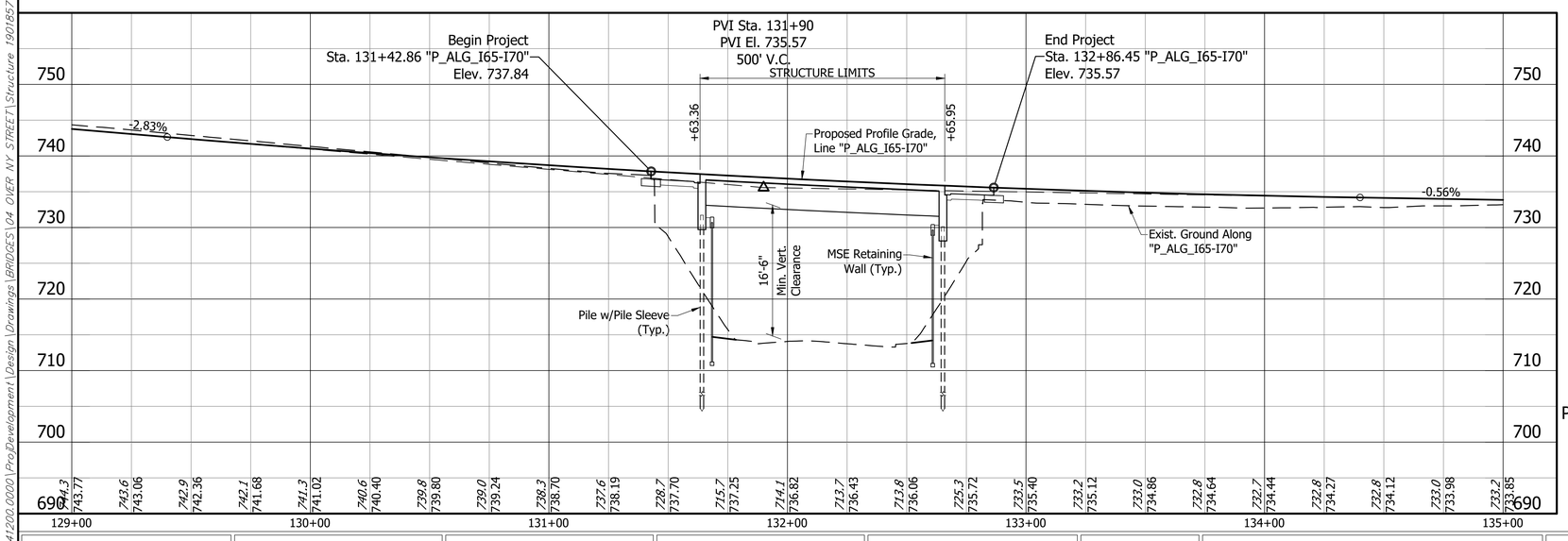

Notes:

1. For R/W and property information, see Location Control Route Survey (DES # _____).
2. For alignment data, see Geometric Layout Sheets (DES #_____).
3. See Road Plans (DES #_____) for Horizontal & Vertical Control Data.

PRESTRESSED COMPOSITE CONCRETE BULB-TEE BEAM BRIDGE
1 SPAN: 101'-0"
54'-5 3/8" CLEAR ROADWAY; SKEW: NO SKEW
I-65 / I-70 S.B. OVER NEW YORK STREET
MARION COUNTY

RECOMMENDED FOR APPROVAL: _____ DESIGN ENGINEER _____ DATE

DESIGNED: B. WRIGHT | DRAWN: L. KIRSCH
CHECKED: V. SATHIRAJU | CHECKED: B. WRIGHT

INDIANA
DEPARTMENT OF TRANSPORTATION

LAYOUT

HORIZONTAL SCALE	BRIDGE FILE
1" = 30'	I65-111-10608 SBL
VERTICAL SCALE	DESIGNATION
1" = 10'	1901857

SURVEY BOOK	SHEET
ELECTRONIC	4 OF 14
CONTRACT	PROJECT
B-36910	1600808

BFS NO. 6412

\\bfsn1241\Jobs5\641200.0000\ProjDevelopment\Design\Drawings\BRIDGES\04 OVER NY STREET\Structure 1901857\1901857_S_BR_LAY01.dwg Dylan Piercefield Plot:2/24/2020 7:51 AM Save:2/24/2020 7:49 AM

STRUCTURE TO BE BUILT ON A 500' VERTICAL CURVE

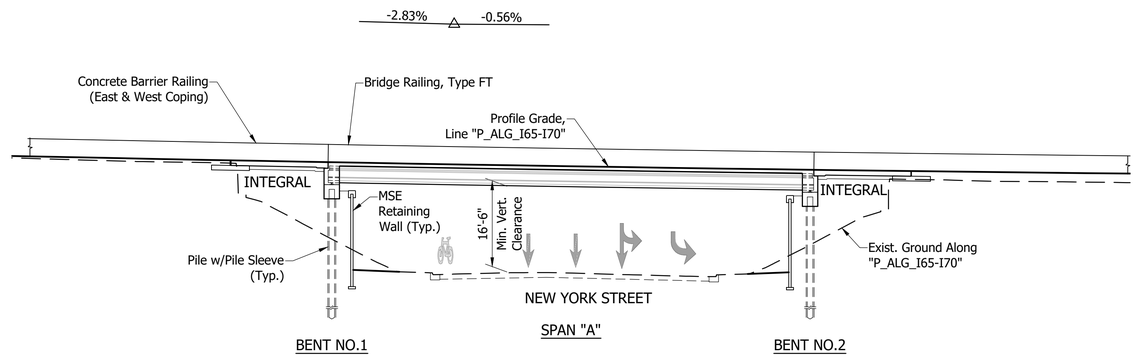

ELEVATION

Scale: 1/16" = 1'-0"

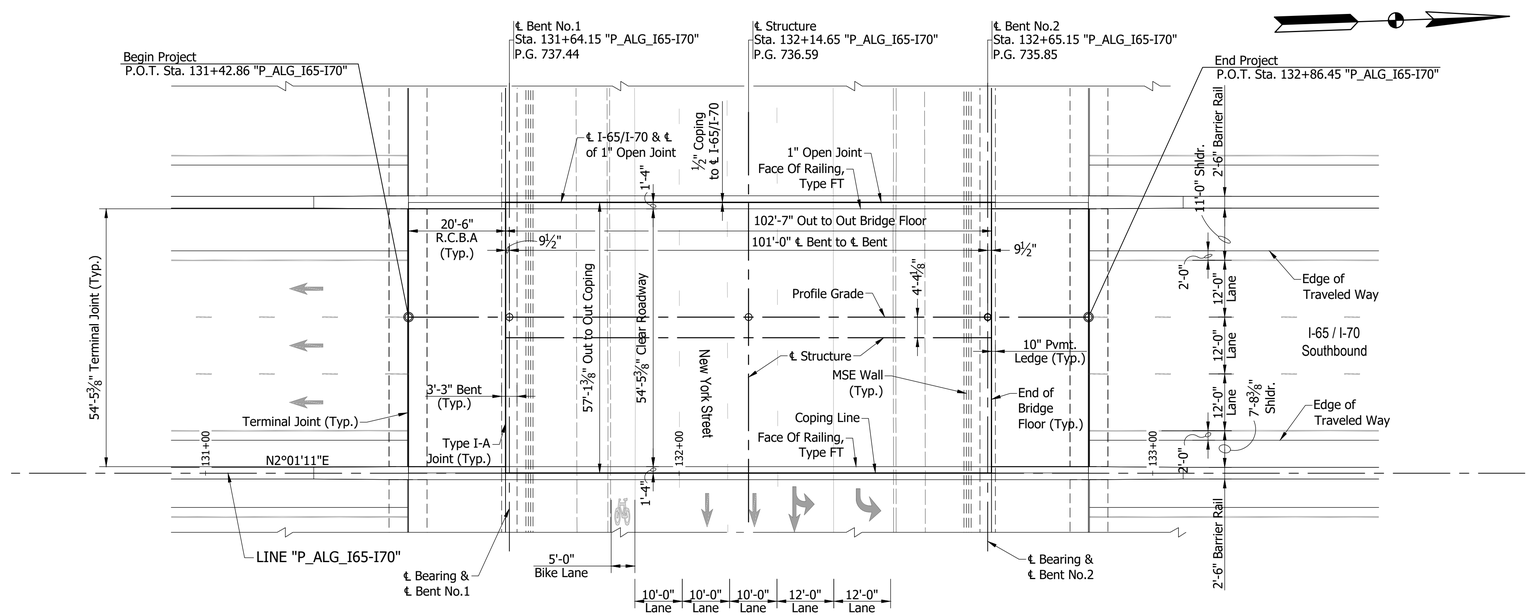

PLAN

Scale: 1/16" = 1'-0"

NOTE:
See Sheet 6 For Typical Section

PRESTRESSED COMPOSITE CONCRETE BULB-TEE BEAM BRIDGE
1 SPAN: 101'-0"
54'-5 3/8" CLEAR ROADWAY; SKEW: NO SKEW
I-65 / I-70 S.B. OVER NEW YORK STREET
MARION COUNTY

RECOMMENDED FOR APPROVAL: _____ DESIGN ENGINEER _____ DATE

DESIGNED: B. WRIGHT DRAWN: L. KIRSCH
CHECKED: V. SATHIRAJU CHECKED: B. WRIGHT

INDIANA
DEPARTMENT OF TRANSPORTATION

GENERAL PLAN - PLAN & ELEVATION VIEWS

HORIZONTAL SCALE	BRIDGE FILE
As Noted	I65-111-10608 SBL
VERTICAL SCALE	DESIGNATION
N/A	1901857
SURVEY BOOK	SHEET
ELECTRONIC	5 OF 14
CONTRACT	PROJECT
B-36910	1600808

BFS NO. 6412

\\bfsnt241\Jobs5\641200.0000\ProjDevelopment\Design\Drawings\BRIDGES\04 OVER NY STREET\Structure 1901857\1901857_S-BR_PLN01.dwg Dylan Fiercefield Plot:2/24/2020 7:51 AM Save:2/24/2020 7:50 AM

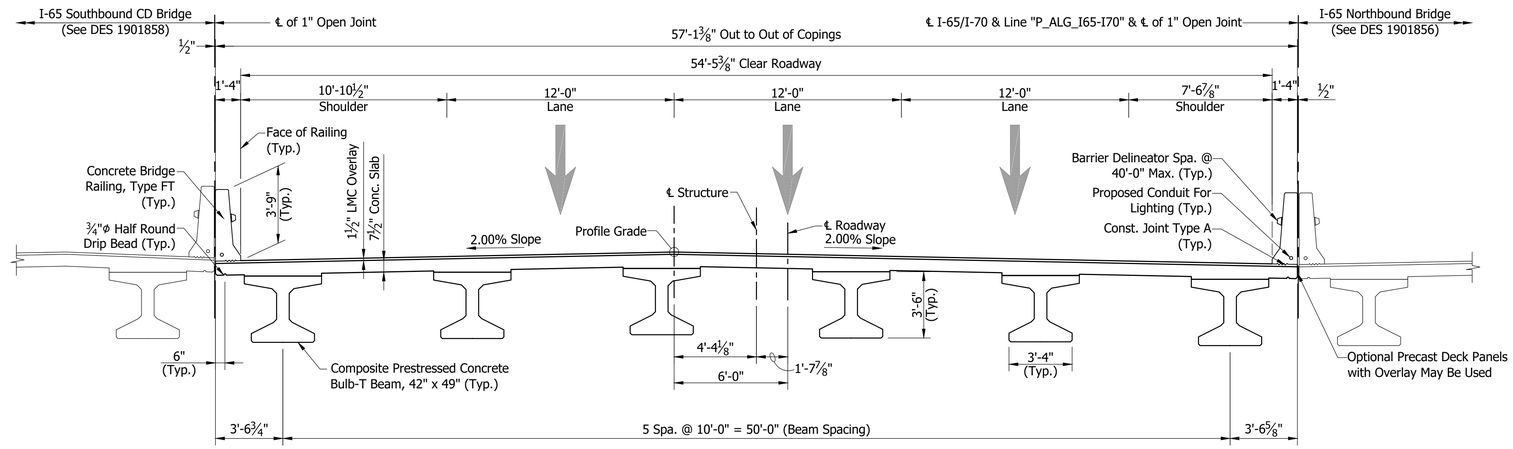

TYPICAL SECTION

Scale: 1/4"= 1'-0"

GENERAL NOTES

The existing structure shall be removed.

Reinforcing bars covering shall be 3 ½" in top and 1" min. in bottom of floor slabs and 3" in footings except bottom steel which shall be 4", and 2" in all other parts, unless noted.

Concrete in floor slab, and diaphragms, barriers, and end bents shall be an alternate Class C in accordance with the Technical Provisions.

Reinforcing Bars in Deck, Barrier, and End Bent Diaphragm Extending into the Deck shall be Stainless Steel. Reinforcing Bars in End Bent Diaphragm not Extending into the Deck and in the Cap shall be Epoxy Coated.

All exposed faces of the MSE walls and reinforced concrete bridge approach slabs shall receive surface seal.

See Bridge Aesthetic Plan for Architectural Details.

DESIGN DATA

LIVE LOAD:

Superstructure and Substructure Designed for HL-93 loading in accordance with the AASHTO LRFD Bridge Design Specifications, 8th Edition, 2017 and its subsequent revisions.

DEAD LOAD:

Designed for Actual Dead Load plus 35 psf of future wearing surface, and 15 psf for SIP Metal Deck Forms.

FLOOR SLAB:

Slab designed with a 7 ½" structural depth and a 1 ½" very early strength LMC wearing surface.

DESIGN STRESSES

CONSTRUCTION LOADING:

The exterior girder has been checked for strength, deflection, and overturning using the construction loads shown below. Cantilever overhang brackets were assumed for support of the deck overhang past the edge of the exterior beam. The finishing machine was assumed to be supported 6 in. outside the vertical coping form. The top overhang brackets were assumed to be located 6 in. past the edge of the vertical coping form. The bottom overhang brackets were assumed to be braced against the intersection of the girder bottom flange and web.

DECK FALSEWORK LOADS:

Designed for 15 psf for permanent metal stay-in-place deck forms, removable deck forms, and 2 ft. exterior walkway.

CONSTRUCTION LIVE LOAD:

Designed for 20 psf extending 2 ft. past the edge of coping and 75 lb/ft vertical force applied at a distance of 6 in. outside the face of coping over a 30 foot length of the deck centered with the finishing machine.

FINISHING-MACHINE LOAD:

4500 lb distributed over 10 ft. along the coping.

WIND LOAD:

Designed for 70 mph horizontal wind load in accordance with LRFD 3.8.1.

ULTIMATE DESIGN STRENGTHS:

Class "A" Concrete	f'c = 3,500 p.s.i.
Class "B" Concrete	f'c = 3,000 p.s.i.
Class "C" Concrete	f'c = 4,000 p.s.i.
Reinforcing Steel (Grade 60)	Fy = 60,000 p.s.i. (barrier)
	Fy = 75,000 p.s.i. (deck)
	Fy = 75,000 p.s.i. (all other locations)

SEISMIC DESIGN DATA:

Seismic Site Class	C
PGA (g)	0.051
S_s (g)	0.12
S_1 (g)	0.051
S_{D1} (g)	0.086
Seismic Design Category	A

PRESTRESSED COMPOSITE CONCRETE BULB-TEE BEAM BRIDGE
1 SPAN: 101'-0"
54'-5 3/8" CLEAR ROADWAY; SKEW: NO SKEW
I-65 / I-70 S.B. OVER NEW YORK STREET
MARION COUNTY

RECOMMENDED FOR APPROVAL: _____ DESIGN ENGINEER _____ DATE

DESIGNED: B. WRIGHT DRAWN: L. KIRSCH
CHECKED: V. SATHIRAJU CHECKED: B. WRIGHT

INDIANA
DEPARTMENT OF TRANSPORTATION

GENERAL PLAN - TYPICAL SECTION

HORIZONTAL SCALE	BRIDGE FILE
As Noted	I65-111-10608 SBL
VERTICAL SCALE	DESIGNATION
N/A	1901857
SURVEY BOOK	SHEET
ELECTRONIC	6 OF 14
CONTRACT	PROJECT
B-36910	1600808

BFS NO. 6412

\\fsnt241\Jobs5\641200.0000\Proj_Development\Design\Drawings\BRIDGES\04 OVER NY STREET\Structure 1901857\1901857_S_BR_PLN02.dwg Dylan Piercefield Plot:2/24/2020 6:03 AM Save:2/20/2020 4:13 PM

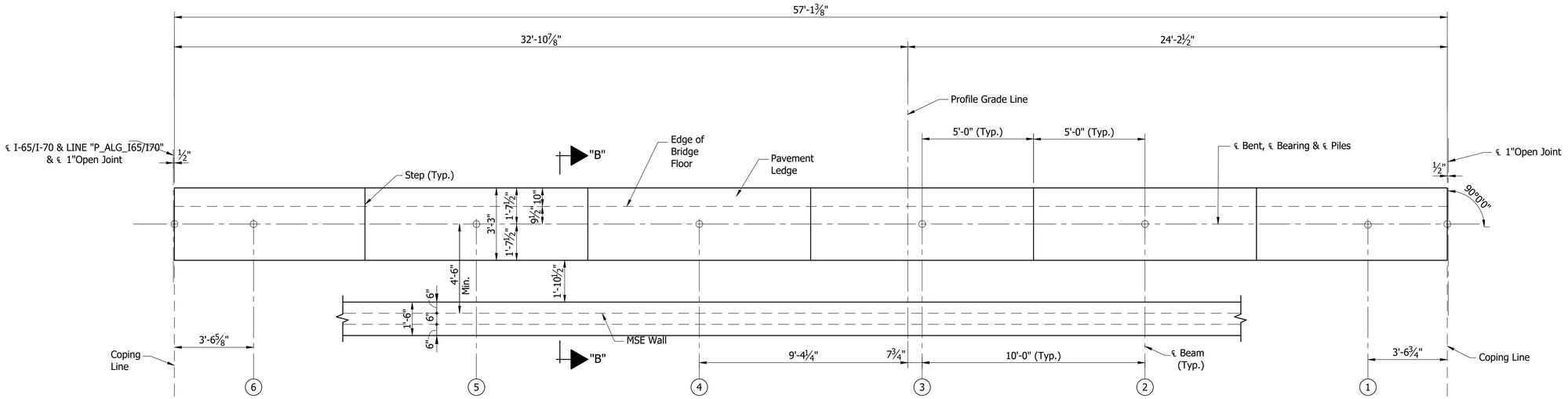

PLAN
BENT NO.1 NB (SHOWN)
BENT NO.2 NB (OPP. HAND)
Scale: ⅜"=1'-0"

SEAT ELEVATIONS						
Beam No.	6	5	4	3	2	1
Bent No.1	732.27	732.47	732.67	732.67	732.47	732.27
Bent No.2	730.62	730.88	730.99	730.99	730.79	730.54

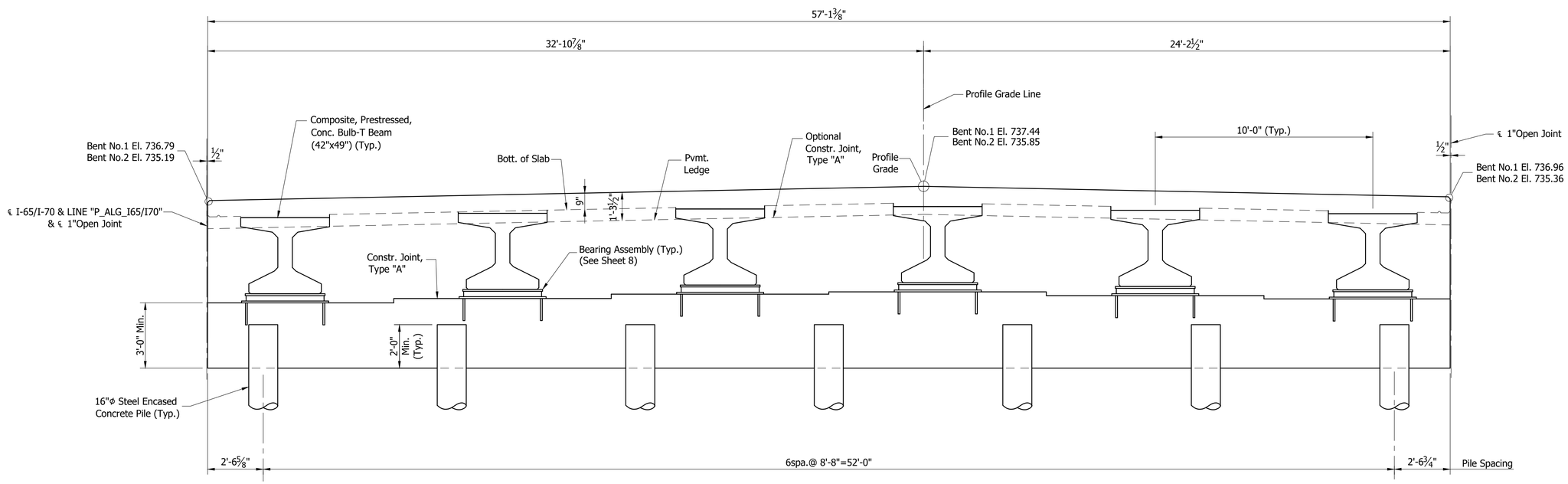

SECTION ALONG ℄ BENT
Scale: ⅜"=1'-0"

RECOMMENDED FOR APPROVAL: _____ DESIGN ENGINEER _____ DATE

DESIGNED: B. WRIGHT DRAWN: D. SHEETZ
CHECKED: V. SATHIRAJU CHECKED: B. WRIGHT

INDIANA
DEPARTMENT OF TRANSPORTATION

BENTS NO. 1 AND NO. 2 DETAILS

HORIZONTAL SCALE	BRIDGE FILE
As Noted	I65-111-10608 SBL
VERTICAL SCALE	DESIGNATION
N/A	1901857
SURVEY BOOK	SHEET
ELECTRONIC	7 OF 14
CONTRACT	PROJECT
B-36910	1600808

6412
BFS NO.

\\bfsn1241\job5\641200.0000\Pro\Development\Design\Drawings\BRIDGES\04 OVER NY STREET\Structure 1901857\1901857_S_BR_BNT01.dwg Dylan Piercefield Plot:2/24/2020 11:37 AM Save:2/24/2020 11:34 AM

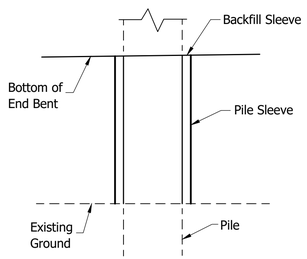

PILE SLEEVE DETAIL

Not to Scale

⊛ As an alternate a ⅞"Φx1'-3" Long Headed Automatic Welded Stud may be used.

⊗ Setting Tolerance of Bottom Plate-Level with to not more than 1/16" below top of Concrete.

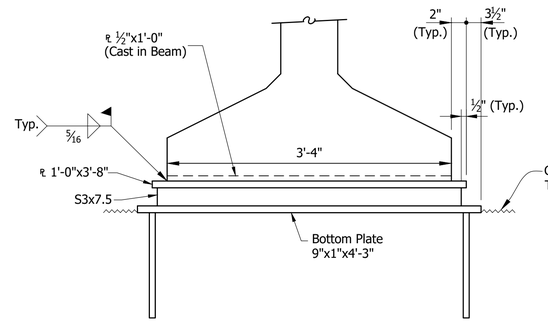

ELEVATION

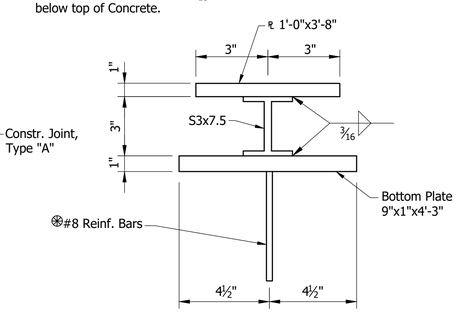

SECTION

BEARING ASSEMBLY

Not to Scale

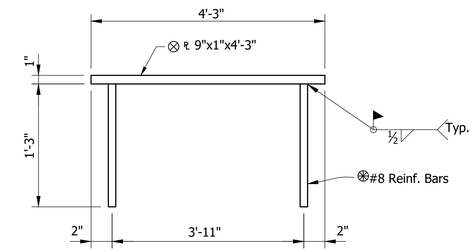

BOTTOM PLATE DETAIL

Not to Scale

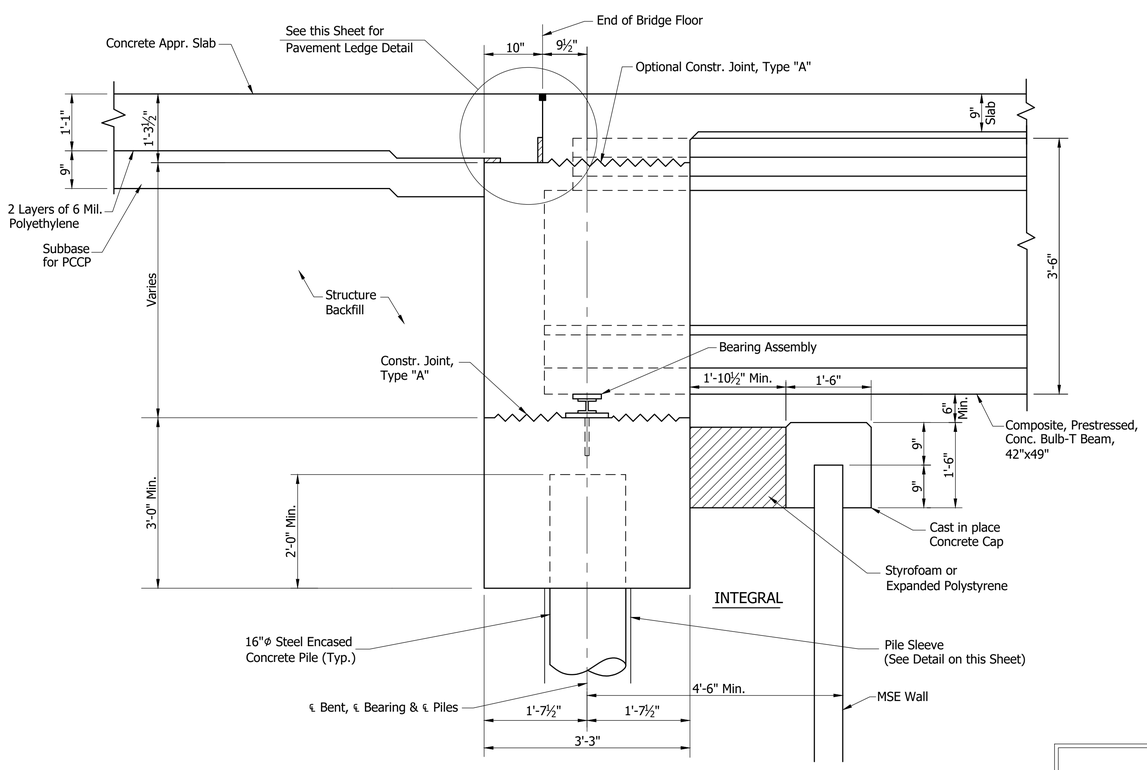

SECTION "B-B"

Not to Scale

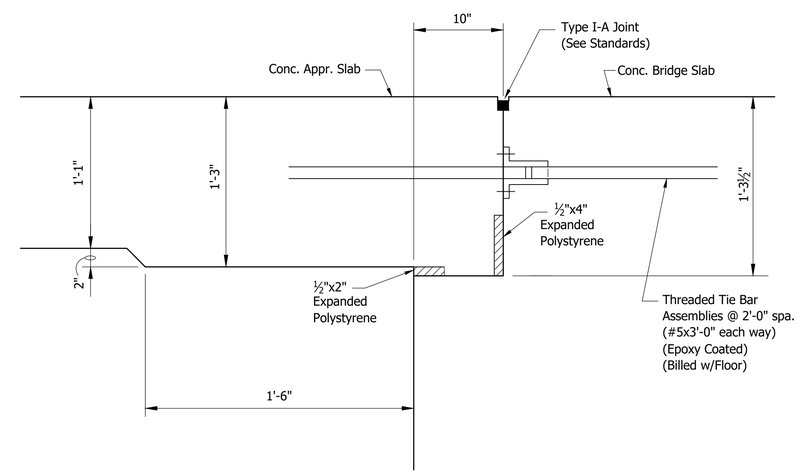

PAVEMENT LEDGE DETAIL

Not to Scale

RECOMMENDED FOR APPROVAL: _____ DESIGN ENGINEER _____ DATE	INDIANA DEPARTMENT OF TRANSPORTATION	HORIZONTAL SCALE: As Noted	BRIDGE FILE: I65-111-10608 SBL
		VERTICAL SCALE: N/A	DESIGNATION: 1901857
DESIGNED: B. WRIGHT DRAWN: D. SHEETZ	BENT DETAILS	SURVEY BOOK: ELECTRONIC	SHEET: 8 OF 14
CHECKED: V. SATHIRAJU CHECKED: B. WRIGHT		CONTRACT: B-36910	PROJECT: 1600808

6412

BFS NO.

\\bfsnt241\jobs5\641200.0000\ProDevelopment\Design\Drawings\BRIDGES\04 OVER NY STREET\Structure 1901857\1901857_S_BR_BNT02.dwg Dylan Piercefield Plot:2/24/2020 6:03 AM Save:2/17/2020 4:55 PM

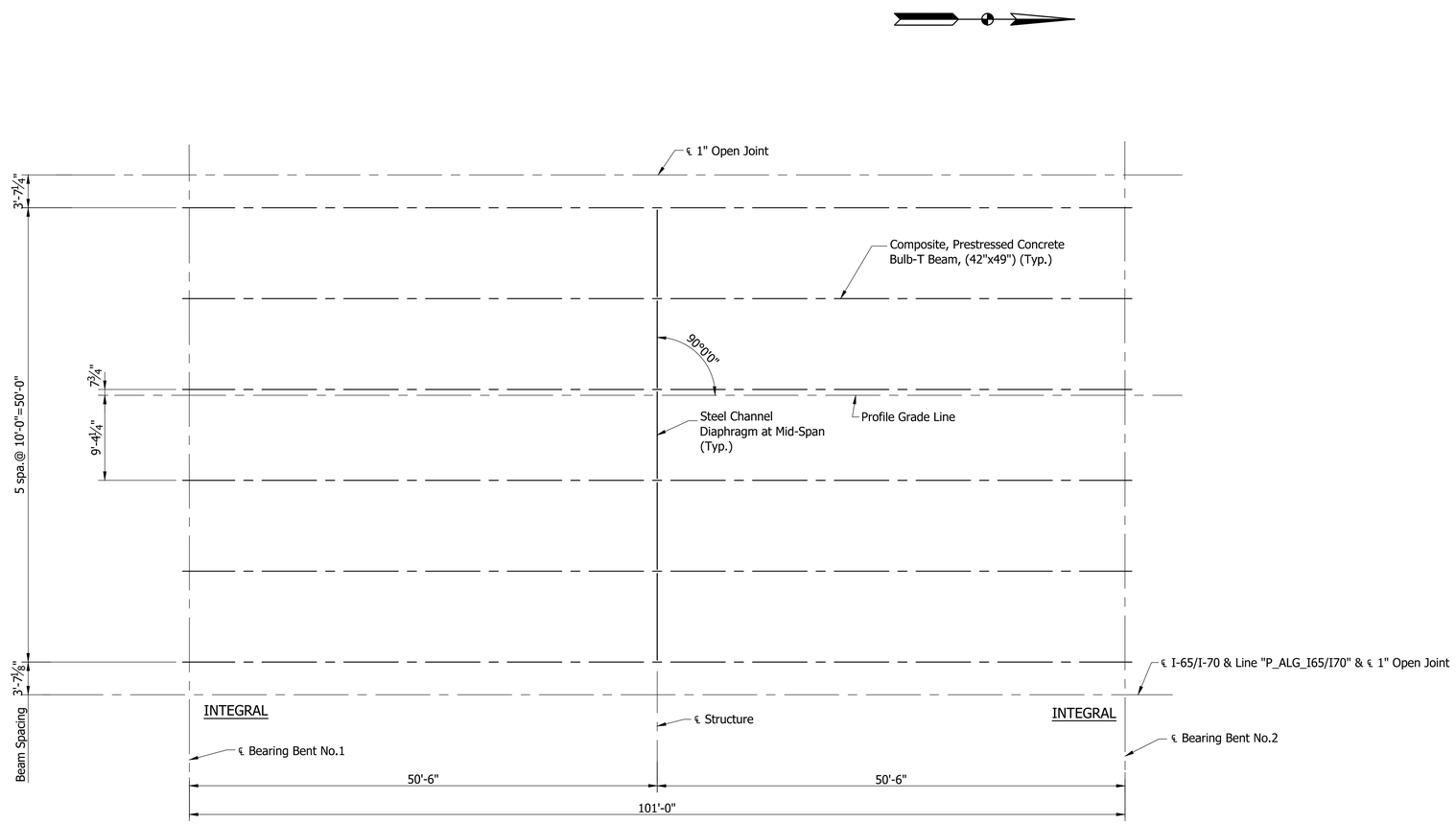

BEAM ERECTION PLAN

Scale: 1/8" = 1'-0"

RECOMMENDED FOR APPROVAL: _____ DESIGN ENGINEER — DATE	INDIANA DEPARTMENT OF TRANSPORTATION	HORIZONTAL SCALE: As Noted	BRIDGE FILE: I65-111-10608 SBL	
		VERTICAL SCALE: N/A	DESIGNATION: 1901857	
DESIGNED: V. SATHIRAJU DRAWN: D. SHEETZ	FRAMING PLAN	SURVEY BOOK: ELECTRONIC	SHEET: 9 OF 14	
CHECKED: B. WRIGHT CHECKED: M. MATEL		CONTRACT: B-36910	PROJECT: 1600808	

BFS NO. 6412

\\bfsnt241\jobs5\641200.0000\ProDevelopment\Design\Drawings\BRIDGES\04 OVER NY STREET\Structure 1901857\1901857_S_BR_FRM01.dwg Dylan Piercefield Plot-2/24/2020 6:03 AM Save:2/17/2020 11:36 AM

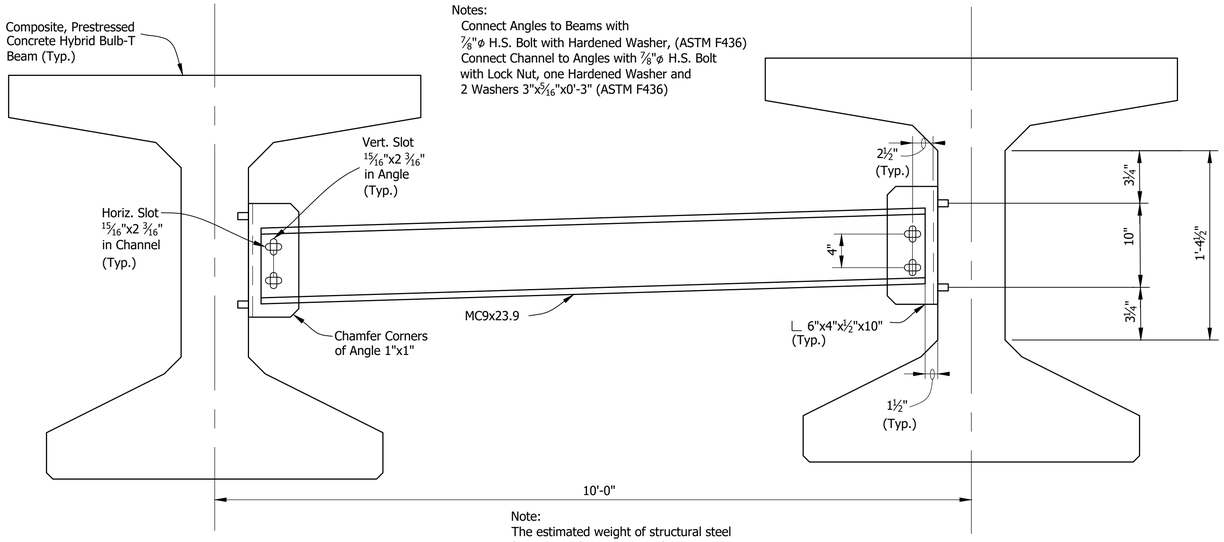

Notes:
Connect Angles to Beams with ⅞"φ H.S. Bolt with Hardened Washer, (ASTM F436)
Connect Channel to Angles with ⅞"φ H.S. Bolt with Lock Nut, one Hardened Washer and 2 Washers 3"x5/16"x0'-3" (ASTM F436)

Note:
The estimated weight of structural steel for one Diaphragm is 224 Lbs.

ELEVATION

Not to Scale

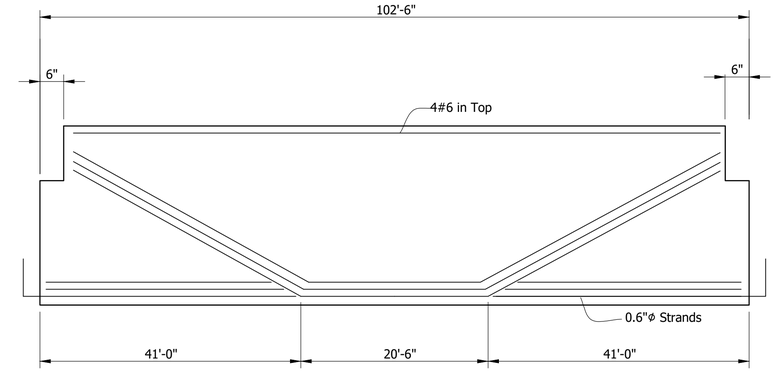

BEAM ELEVATION
SPAN "A" (SHOWN)
SHOWING DRAPED STRANDS

Not to Scale

✳ Denotes Epoxy Coated

Note:
Bars 1" Clear unless noted.

(1) Surface Seal req'd on top of all Beams and Exterior Face of Exterior Beams

(2) 1"φ Holes or ¾"φ Inserts for Dowels at Bent or Pier. (See Beam Plans)

(3) PL ½"x12"x3'-2½" at End Bent Ends only

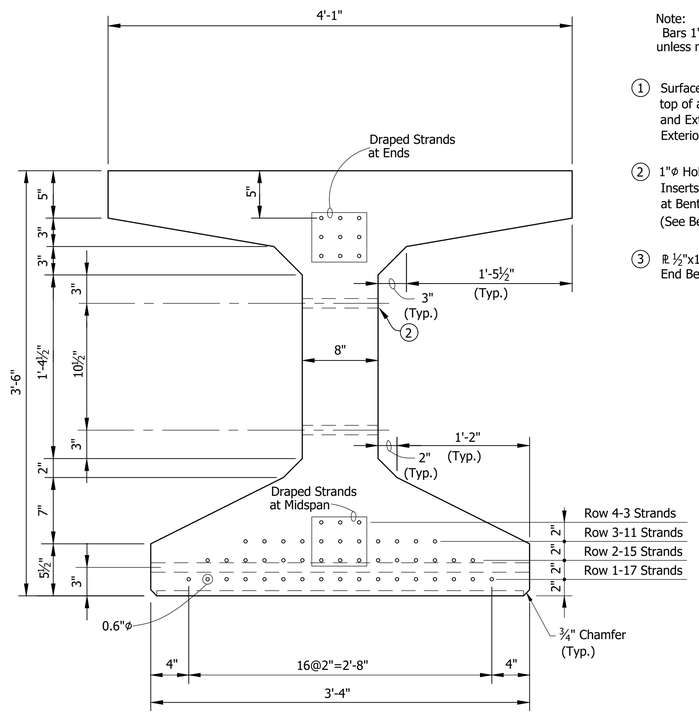

SECTION SHOWING STRANDS

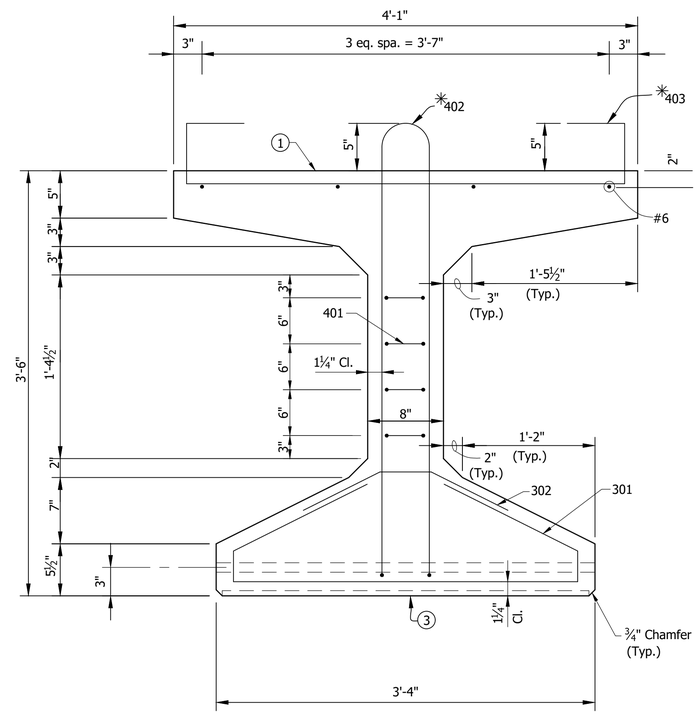

SECTION SHOWING REINFORCING

BEAM SECTIONS

Not to Scale

RECOMMENDED FOR APPROVAL: _____ DESIGN ENGINEER _____ DATE	INDIANA DEPARTMENT OF TRANSPORTATION	HORIZONTAL SCALE: As Noted	BRIDGE FILE: I65-111-10608 SBL
		VERTICAL SCALE: N/A	DESIGNATION: 1901857
DESIGNED: V. SATHIRAJU DRAWN: K. COFFMAN	BEAM DETAILS	SURVEY BOOK: ELECTRONIC	SHEET: 10 OF 14
CHECKED: B. WRIGHT CHECKED: B. WRIGHT		CONTRACT: B-36910	PROJECT: 1600808

BFS NO. 6412

\\bfsnt241\jobs5\641200.0000\ProjDevelopment\Design\Drawings\BRIDGES\04 OVER NY STREET\Structure 1901857\1901857_S_BR_BMD01.dwg Dylan Piercefield Plot:2/24/2020 6:03 AM Save:2/17/2020 11:39 AM

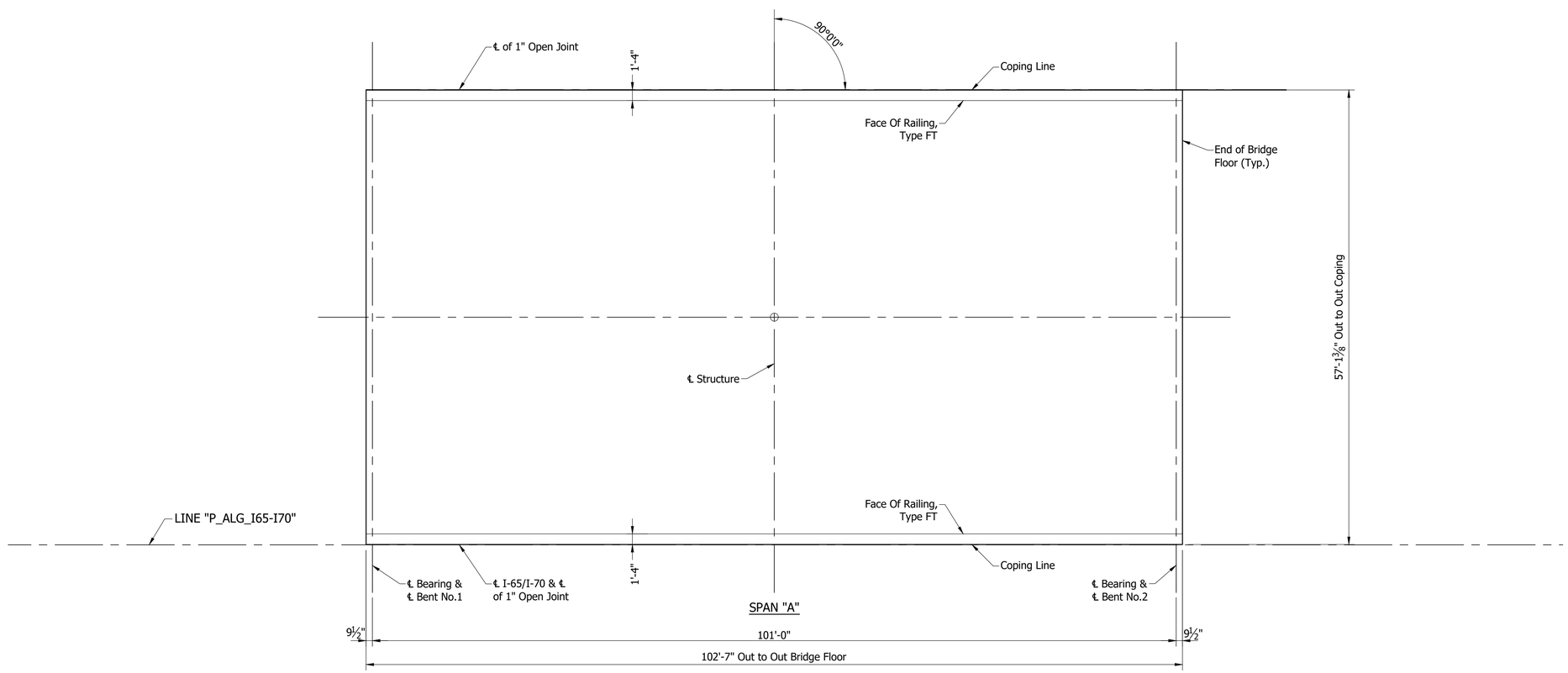

FLOOR PLAN

Scale: 1/8" = 1'-0"

NOTE:
See Sheet ___ For _____

	RECOMMENDED FOR APPROVAL: _____ DESIGN ENGINEER _____ DATE	INDIANA DEPARTMENT OF TRANSPORTATION	HORIZONTAL SCALE: As Noted	BRIDGE FILE: I65-111-10608 SBL
			VERTICAL SCALE: N/A	DESIGNATION: 1901857
	DESIGNED: B. WRIGHT DRAWN: D. PIERCEFIELD	FLOOR DETAILS	SURVEY BOOK: ELECTRONIC	SHEET: 11 OF 14
	CHECKED: M. EICHENAUER CHECKED: B. WRIGHT		CONTRACT: B-36910	PROJECT: 1600808

BPS NO. 6412

\\bfsn1241\jobs5\641200.0000\Pro Development\Design\Drawings\BRIDGES\04 OVER NY STREET\Structure 1901857\1901857_S_BR_FLR01.dwg Dylan Piercefield Plot:2/24,2020 6:04 AM Save:1/31,2020 6:44 AM

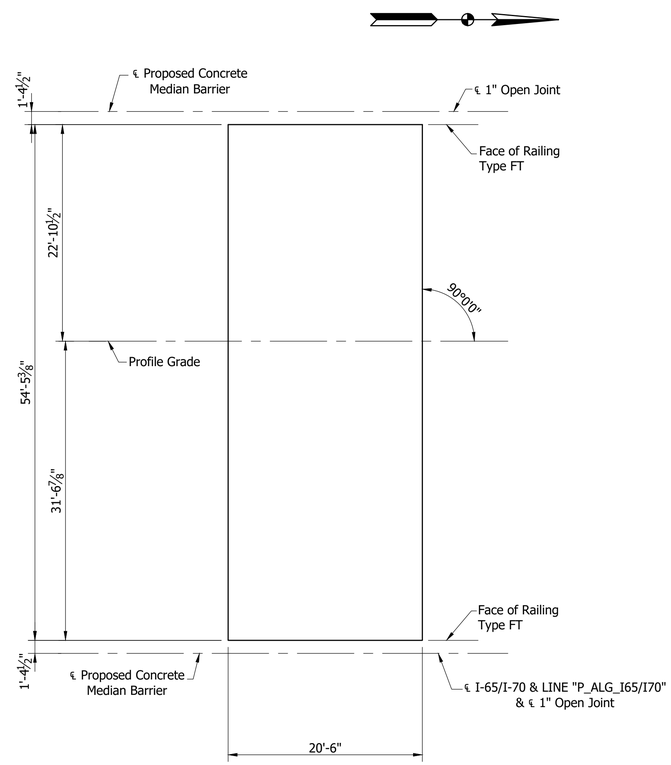

PLAN
SOUTH SLAB (SHOWN)
NORTH SLAB (OPP. HAND)
Scale: ⅛"=1'-0"

RECOMMENDED FOR APPROVAL: _____ DESIGN ENGINEER _____ DATE	INDIANA DEPARTMENT OF TRANSPORTATION	HORIZONTAL SCALE: As Noted	BRIDGE FILE: I65-111-10608 SBL	
		VERTICAL SCALE: N/A	DESIGNATION: 1901857	
DESIGNED: D. SHEETZ DRAWN: D. SHEETZ	APPROACH SLAB	SURVEY BOOK: ELECTRONIC	SHEET: 12 OF 14	
CHECKED: B. WRIGHT CHECKED: M. MATEL		CONTRACT: B-36910	PROJECT: 1600808	

BFS NO. 6412

\\bfsnt241\job5\641200.0000\ProDevelopment\Design\Drawings\BRIDGES\04 OVER NY STREET\Structure 1901857\1901857_S_BR_AP301.dwg Dylan Piercefield Plot:2/24/2020 6:04 AM Save:1/28/2020 10:20 AM

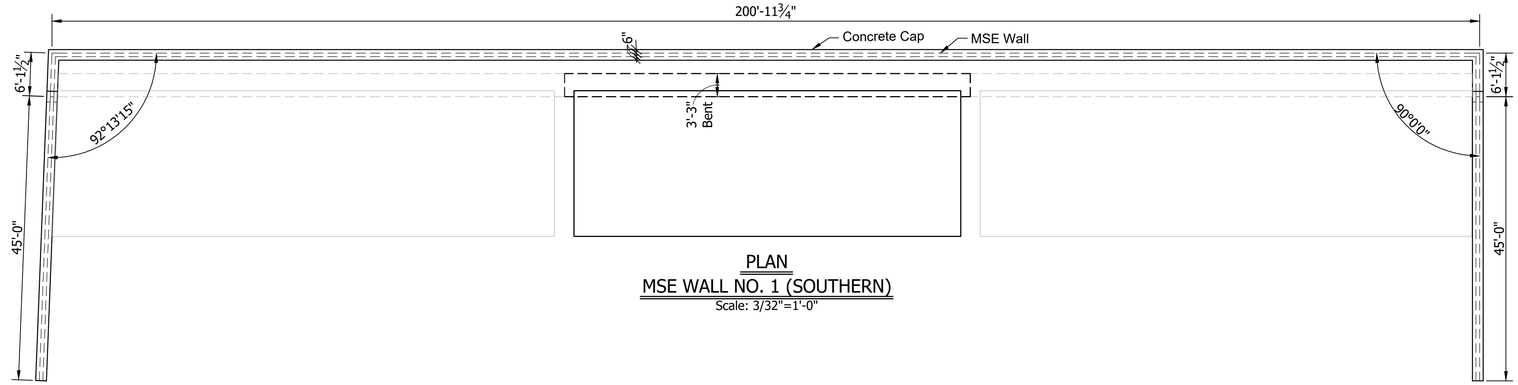

PLAN
MSE WALL NO. 1 (SOUTHERN)
Scale: 3/32"=1'-0"

NOTE:
Elevation Looking At Back Face of Wall

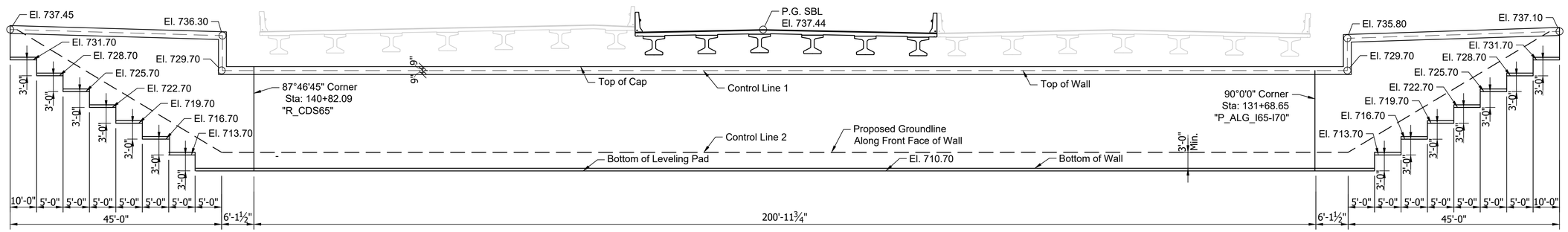

ELEVATION
MSE WALL NO. 1 (SOUTHERN)
Scale: 3/32"=1'-0"

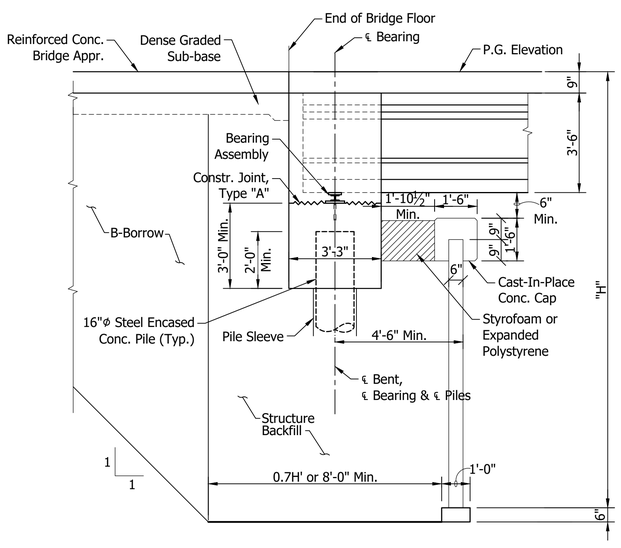

SECTION
MSE WALL NO. 1
Scale: 3/8"=1'-0"

RECOMMENDED FOR APPROVAL: DESIGN ENGINEER DATE	INDIANA DEPARTMENT OF TRANSPORTATION	HORIZONTAL SCALE: As Noted	BRIDGE FILE: I65-111-10608 SBL
		VERTICAL SCALE: N/A	DESIGNATION: 1901857
DESIGNED: B. WRIGHT DRAWN: D. PIERCEFIELD	WALL LAYOUT	SURVEY BOOK: ELECTRONIC	SHEET: 13 OF 14
CHECKED: M. EICHENAUER CHECKED: B. WRIGHT		CONTRACT: B-36910	PROJECT: 1600808

BFS NO. 6412

\\bfsnt241\Job5\641200.0000\Pro\Development\Design\Drawings\BRIDGES\04 OVER NY STREET\Structure 1901857\1901857_S_BR_WL01.dwg Dylan Piercefield Plot:2/24/2020 11:37 AM Save:2/24/2020 11:36 AM

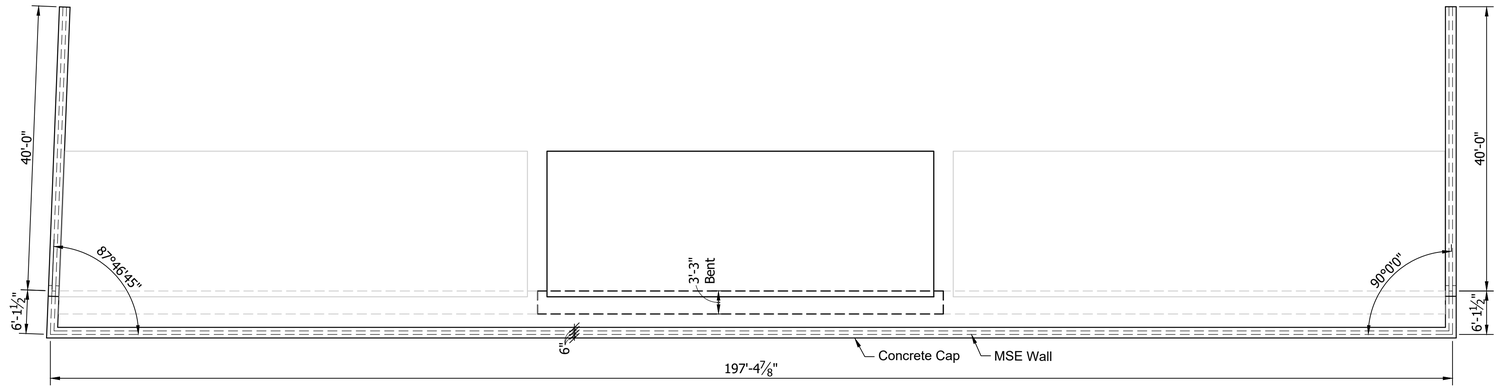

PLAN
MSE WALL NO. 2 (NORTHERN)
Scale: 3/32"=1'-0"

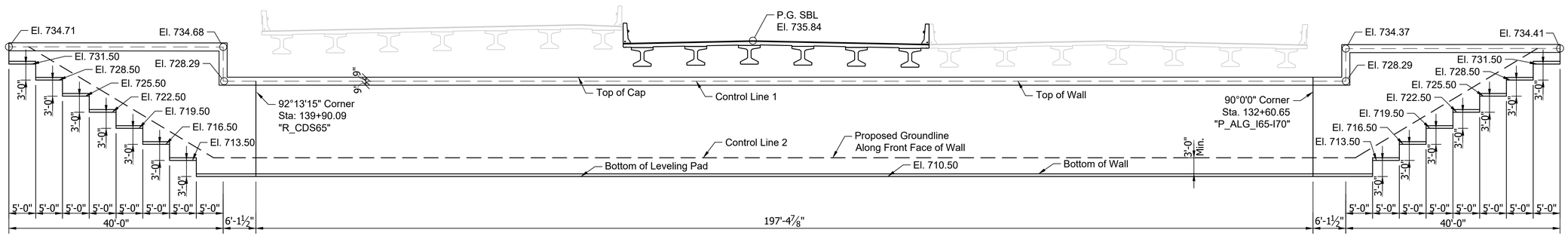

ELEVATION
MSE WALL NO. 2 (NORTHERN)
Scale: 3/32"=1'-0"

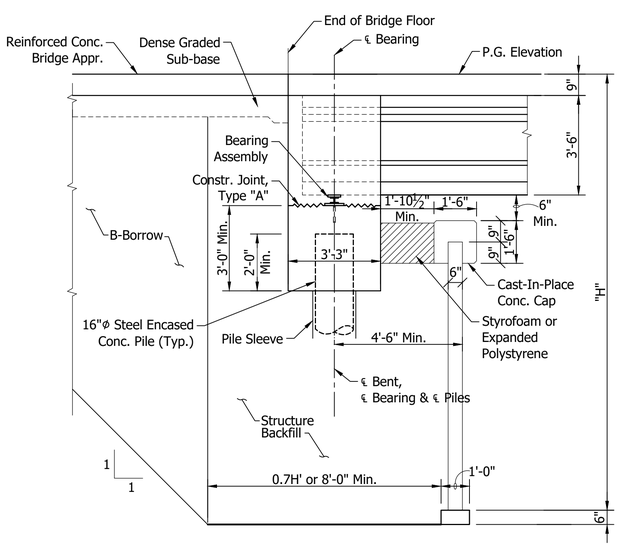

SECTION
MSE WALL NO. 2
Scale: 3/8"=1'-0"

	RECOMMENDED FOR APPROVAL: DESIGN ENGINEER DATE	INDIANA DEPARTMENT OF TRANSPORTATION	HORIZONTAL SCALE: AS NOTED	BRIDGE FILE: I65-111-10608 SBL
			VERTICAL SCALE: AS NOTED	DESIGNATION: 1901857
	DESIGNED: B. WRIGHT DRAWN: D. PIERCEFIELD	WALL LAYOUT	SURVEY BOOK	SHEET
	CHECKED: M. EICHENAUER CHECKED: B. WRIGHT		ELECTRONIC	14 OF 14
			CONTRACT: B-36910	PROJECT: 1600808

BFS NO. 6412

\\bfsn\241\Jobs5\641200.0000\ProjDevelopment\Design\Drawings\BRIDGES\04 OVER NV STREET\Structure 1901857\1901857_S_BR_WLL02.dwg Dylan Piercefield Plot:2/24/2020 11:37 AM Save:2/24/2020 11:37 AM

PROJECT	DESIGNATION
1600808	1901858
CONTRACT	BRIDGE FILE
B-36910	I65-111-10609 CD

STRUCTURE INFORMATION

STRUCTURE	TYPE	SPAN & SKEW	OVER	STATION
I65-111-10609 CD	PRESTRESSED COMPOSITE CONCRETE BULB-TEE BEAM BRIDGE	1 SPAN: 101'-0" SKEW: NO SKEW	NEW YORK STREET	140+28.77 LINE "R_CDS65"

INDIANA DEPARTMENT OF TRANSPORTATION

BRIDGE PLANS

FOR SPANS OVER 20 FEET

ROUTE: I-65 / I-70 S.B. CD AT: RP 111+49

PROJECT NO. 1600808 P.E.

1600808 CONST.

NO ADDITIONAL RIGHT OF WAY REQUIRED FOR THIS PROJECT

BRIDGE REPLACEMENT ON I-65 / I-70 S.B. CD OVER NEW YORK STREET
LOCATED 1.19 MILES NORTH OF I-70 (SOUTH SPLIT) INTERCHANGE
SECTION 1, TOWNSHIP 15 NORTH, RANGE 3 EAST
CENTER TOWNSHIP, MARION COUNTY INDIANA

TRAFFIC DATA	I-65 / I-70 S.B. CD	OHIO ST. EXIT RAMP	NEW YORK STREET
A.D.T. (2021)	11,569 V.P.D.	7,353 V.P.D.	11,034 V.P.D.
A.D.T. (2041)	11,189 V.P.D.	7,284 V.P.D.	12,639 V.P.D.
D.H.V. (2041)	1,127 V.P.H.	1,384 V.P.H.	1,679 V.P.H.
DIRECTIONAL DISTRIBUTION	100 %	100 %	61 %
TRUCKS	8 % D.H.V.	1 % D.H.V.	2 % D.H.V.
DESIGN DATA			
DESIGN SPEED	55 M.P.H.	45 M.P.H.	25 M.P.H.
PROJECT DESIGN CRITERIA	4R (FREEWAY)		N/A
FUNCTIONAL CLASSIFICATION	URBAN FREEWAY		MINOR ARTERIAL
RURAL/URBAN	URBAN (BUILT-UP)		URBAN (BUILT-UP)
TERRAIN	LEVEL		LEVEL
ACCESS CONTROL	FULL CONTROL		NONE

END PROJECT No. 1600808
STATION 25+75.00 LINE "P_ALG_I65"

END PROJECT No. 1600808
STATION 41+85.70 LINE "P_ALG_I70"

R. 3 E. | R. 4 E.

T. 16 N.

T. 15 N.

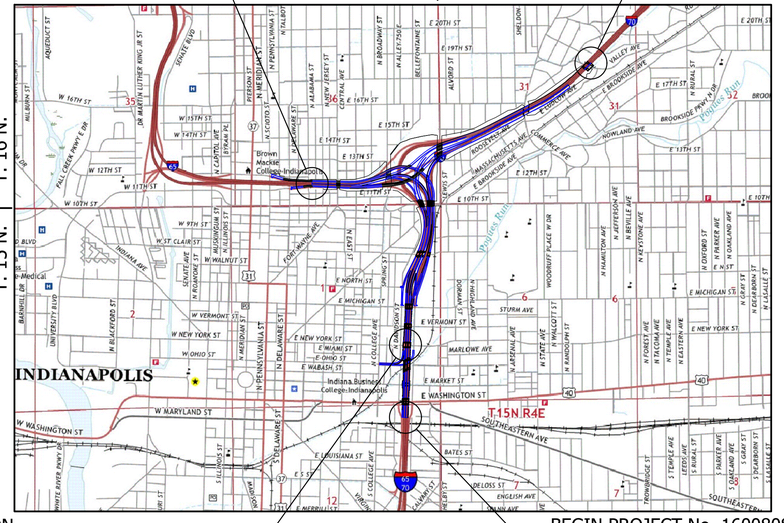

PROJECT LOCATION
BRIDGE FILE No. I65-111-10609 CD
I-65 / I-70 S.B. CD OVER NEW YORK STREET
STA. 140+28.77 LINE "R_CDS65"

LOCATION MAP
MARION COUNTY

BEGIN PROJECT No. 1600808
STATION 113+00.00 LINE "P_ALG_I65/I70"

SCALE: 1" = 2000'

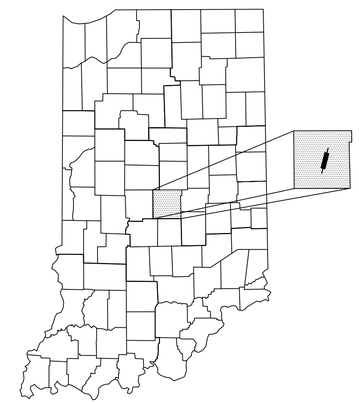

PROJECT LOCATION SHOWN BY

LATITUDE: 39°46'15" N LONGITUDE: 86°08'34" W

BRIDGE LENGTH :	0.020 MI.
ROADWAY LENGTH :	SEE ROAD PLANS
TOTAL LENGTH :	SEE ROAD PLANS
MAX GRADE :	2.52%

HUC: 05120201130020

INDIANA DEPARTMENT OF TRANSPORTATION
STANDARD SPECIFICATIONS DATED 2020 TO
BE USED WITH THESE PLANS.

SUPERIOR CONSTRUCTION

PLANS PREPARED BY: Butler Fairman and Seufert Inc. (317)713-4615 PHONE

CERTIFIED BY: . DATE

APPROVED FOR LETTING: . INDIANA DEPARTMENT OF TRANSPORTATION DATE

BRIDGE FILE
I65-111-10609 CD
DESIGNATION
1901858

SURVEY BOOK	SHEET		
ELECTRONIC	1	OF	15
CONTRACT	PROJECT		
B-36910	1600808		

6412

\\bfsn1241\Jobs5\641200.0000\ProDevelopment\Design\Drawings\BRIDGES\04 OVER NY STREET\Structure 1901858\1901858_S_BR_TITL01.dwg Dylan Piercefield Plot:2/24/2020 6:05 AM Save:2/21/2020 10:45 AM

UTILITIES

REVISIONS

SHEET NO.	DATE	REVISED

KIN PROJECT INFORMATION

DESIGNATION	PROJECT DESCRIPTION	
1600808	COMPLETE ROAD RECONSTRUCTION OF I-65/I-70 FROM WASHINGTON STREET TO I-65 OVER DELAWARE STREET AND I-70 OVER VALLEY AVENUE	LEAD DES
1901935	ITS FOR I-65/I-70 FROM WASHINGTON STREET TO I-65 OVER DELAWARE STREET AND I-70 OVER VALLEY AVENUE	
1901936	SIGNS, LIGHTING, SIGNALS AND MARKING FOR I-65/I-70 FROM WASHINGTON STREET TO I-65 OVER DELAWARE STREET AND I-70 OVER VALLEY AVENUE	
1901847	BRIDGE REPLACEMENT ON I-65/I-70 NB OVER WASHINGTON STREET	
1901848	BRIDGE REPLACEMENT ON I-65/I-70 SB OVER WASHINGTON STREET	
1901849	BRIDGE REPLACEMENT ON I-65/I-70 SB CD OVER WASHINGTON STREET	
1901850	BRIDGE REPLACEMENT ON I-65/I-70 NB OVER MARKET STREET	
1901851	BRIDGE REPLACEMENT ON I-65/I-70 SB OVER MARKET STREET	
1901852	BRIDGE REPLACEMENT ON I-65/I-70 SB CD OVER MARKET STREET	
1901853	BRIDGE REPLACEMENT ON I-65/I-70 NB OVER CSX RAILROAD & OHIO STREET	
1901854	BRIDGE REPLACEMENT ON I-65/I-70 SB OVER CSX RAILROAD & OHIO STREET	
1901855	BRIDGE REPLACEMENT ON I-65/I-70 SB CD OVER CSX RAILROAD & OHIO STREET	
1901856	BRIDGE REPLACEMENT ON I-65/I-70 NB OVER NEW YORK STREET	
1901857	BRIDGE REPLACEMENT ON I-65/I-70 SB OVER NEW YORK STREET	
1901858	BRIDGE REPLACEMENT ON I-65/I-70 SB CD OVER NEW YORK STREET	
1901861	BRIDGE REPLACEMENT ON I-65/I-70 SB CD OVER VERMONT STREET	
1901862	BRIDGE REPLACEMENT ON I-65 NB & I-70 EB OVER MICHIGAN STREET	
1901863	BRIDGE REPLACEMENT ON I-65 SB/I-70 WB OVER MICHIGAN STREET	
1901864	BRIDGE REPLACEMENT ON I-65/I-70 SB CD OVER MICHIGAN STREET	
1901865	BRIDGE REPLACEMENT ON I-65 NB OVER I-70 EB ENTRANCE RAMP	
1901881	BRIDGE REPLACEMENT ON I-65 NB OVER ST. CLAIR STREET	
1901889	NEW BRIDGE CONSTRUCTION ON I-70 EB OVER ST. CLAIR STREET	
1901892	BRIDGE REPLACEMENT ON I-65 SB/I-70 WB OVER ST. CLAIR STREET	
1901896	NEW BRIDGE CONSTRUCTION ON SB CD OVER ST. CLAIR STREET	
1901897	BRIDGE REPLACEMENT ON I-65 NB OVER EAST 10TH STREET	
1901899	NEW BRIDGE CONSTRUCTION ON I-70 EB OVER EAST 10TH STREET	
1901901	BRIDGE REPLACEMENT ON I-65 SB OVER EAST 10TH STREET	
1901903	BRIDGE REPLACEMENT ON I-70 WB OVER EAST 10TH STREET	
1901905	NEW BRIDGE CONSTRUCTION ON SB CD & RAMP OVER EAST 10TH STREET	
1901906	NEW BRIDGE CONSTRUCTION ON I-65 NB CD EXIT RAMP OVER CENTRAL AVENUE	
1901907	BRIDGE REPLACEMENT ON I-65 NB OVER CENTRAL AVENUE	
1901908	BRIDGE REPLACEMENT ON I-65 SB OVER CENTRAL AVENUE	
1901909	NEW BRIDGE CONSTRUCTION ON I-65 SB CD ENTRANCE RAMP OVER CENTRAL AVE.	
1901914	BRIDGE REPLACEMENT ON I-70 WB TO I-65 NB OVER COLLEGE AVENUE	
1901915	BRIDGE REPLACEMENT ON I-65 NB & PENNSYLVANIA EXIT RAMP OVER COLLEGE AVENUE	
1901917	BRIDGE REPLACEMENT ON I-65 SB & SB CD RAMP OVER COLLEGE AVENUE	
1901918	BRIDGE REPLACEMENT ON I-65 SB & DELAWARE ENTRANCE RAMP TO I-70 EB OVER COLLEGE AVENUE & FIVE RAMPS	
1901919	BRIDGE REPLACEMENT ON I-65 NB OVER I-70 WB & RAMP	
1901920	BRIDGE REPLACEMENT ON I-70 WB TO I-65 NB OVER THREE RAMPS	
1901921	BRIDGE REPLACEMENT ON I-65 SB OVER I-70 WB & SB CD RAMP	
1901922	NEW BRIDGE CONSTRUCTION ON I-70 EB OVER I-65 NB	
1901923	BRIDGE REPLACEMENT ON I-70 WB & SB CD OVER LEWIS STREET & MONON TRAIL	
1901925	NEW BRIDGE CONSTRUCTION ON I-70 WB TO I-65 NB OVER LEWIS STREET & MONON TRAIL	
1901927	NOT USED	
1901928	BRIDGE REPLACEMENT ON I-70 EB OVER LEWIS STREET & MONON TRAIL	
1901929	PREVENTATIVE MAINTENANCE ON I-70 WB OVER ROOSEVELT AT COMMERCE AVENUE	
1901930	PREVENTATIVE MAINTENANCE ON I-70 EB OVER ROOSEVELT AT COMMERCE AVENUE	
1901931	PREVENTATIVE MAINTENANCE ON I-70 WB OVER VALLEY AVENUE	
1901932	PREVENTATIVE MAINTENANCE ON I-70 EB OVER VALLEY AVENUE	
1901933	REHABILITATE AND WIDEN ON I-65 OVER 7 STREETS, ACCESS RD, MONORAIL (AKA "MONSTER BRIDGE") - PENNSYLVANIA EXIT RAMP	
1901934	REHABILITATE AND WIDEN ON I-65 OVER 7 STREETS, ACCESS RD, MONORAIL (AKA "MONSTER BRIDGE") - DELAWARE ENTRANCE RAMP	
1902179	BRIDGE REPLACEMENT ON I-65 NB/I70 EB OVER VERMONT STREET	
1902180	BRIDGE REPLACEMENT ON I-65 SB/I70 WB OVER VERMONT STREET	

INDEX

SHEET NO.	DESIGNATION
1	TITLE
2	INDEX
3	MAINTENANCE OF TRAFFIC
4	LAYOUT
5	GENERAL PLAN - PLAN & ELEVATION VIEWS
6	GENERAL PLAN - TYPICAL SECTION
7	BENT NO. 1 DETAILS
8	BENT NO. 2 DETAILS
9	BENT DETAILS
10	FRAMING PLAN
11	BEAM DETAILS
12	FLOOR DETAILS
13	APPROACH SLAB
14	WALL LAYOUT
15	WALL LAYOUT

RECOMMENDED FOR APPROVAL: _____ DESIGN ENGINEER _____ DATE

DESIGNED: B. WRIGHT DRAWN: K. COFFMAN

CHECKED: M. EICHENAUER CHECKED: B. WRIGHT

INDIANA
DEPARTMENT OF TRANSPORTATION

INDEX

HORIZONTAL SCALE	BRIDGE FILE
N/A	I65-111-10609 CD
VERTICAL SCALE	DESIGNATION
N/A	1901858
SURVEY BOOK	SHEET
ELECTRONIC	2 OF 15
CONTRACT	PROJECT
B-36910	1600808

6412

BFS NO.

\\bfsnt241\jobs5\641200.0000\ProjDevelopment\Design\Drawings\BRIDGES\04 OVER NY STREET\Structure 1901858\1901858_S_BR_IND01.dwg Dylan Piercefield Plot: 2/24/2020 7:56 AM Save: 2/24/2020 7:53 AM

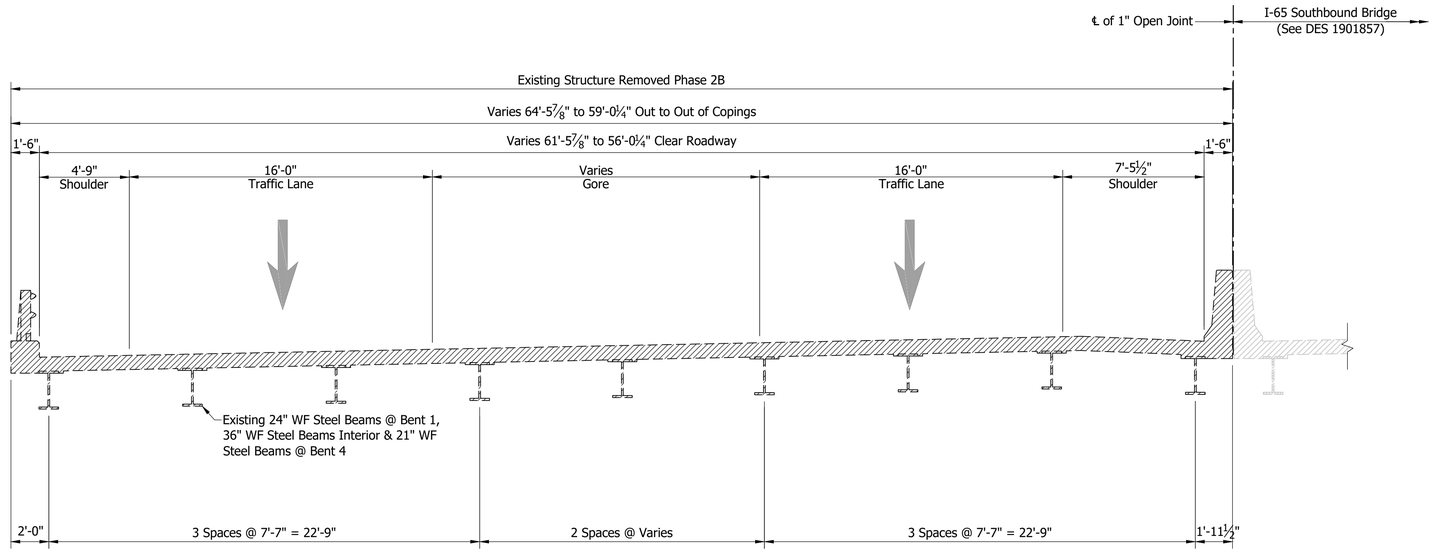

EXISTING I-65/I-70 SOUTHBOUND CD TYPICAL SECTION

Scale: 1/4"= 1'-0"

LEGEND

Limits of Removal

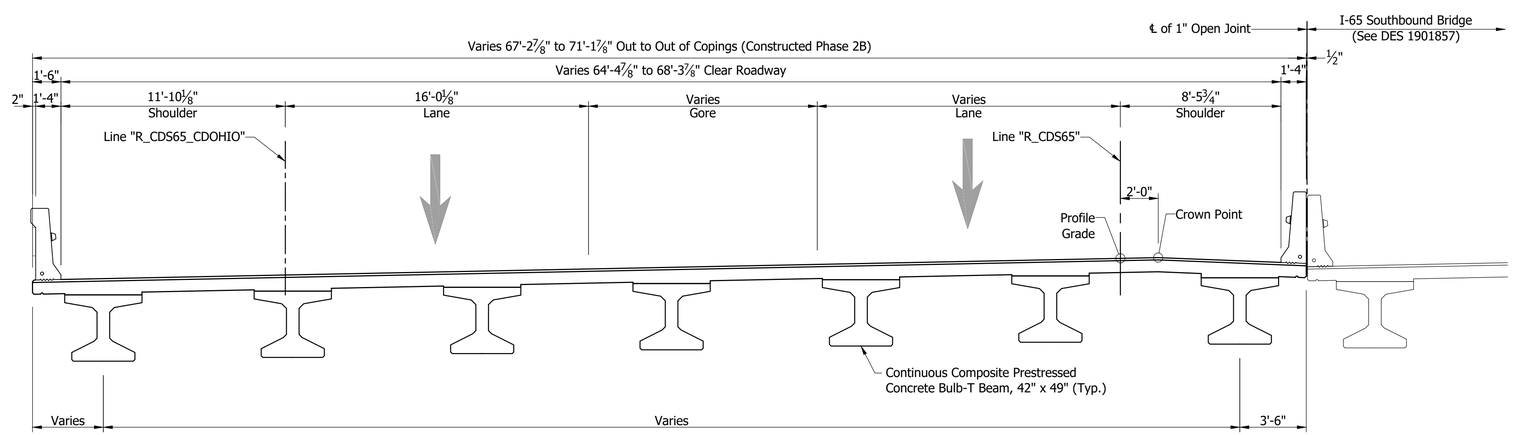

PROPOSED I-65/I-70 SOUTHBOUND CD TYPICAL SECTION

Scale: 1/4"= 1'-0"

RECOMMENDED FOR APPROVAL: DESIGN ENGINEER DATE	INDIANA DEPARTMENT OF TRANSPORTATION	HORIZONTAL SCALE: As Noted	BRIDGE FILE: I65-111-10609 CD
		VERTICAL SCALE: N/A	DESIGNATION: 1901858
DESIGNED: B. WRIGHT DRAWN: M. SCOTT	MAINTENANCE OF TRAFFIC	SURVEY BOOK: ELECTRONIC	SHEET: 3 OF 15
CHECKED: D. SHEETZ CHECKED: B. WRIGHT		CONTRACT: B-36910	PROJECT: 1600808

BFS NO. 6412

\\bfsnt241\Jobs5\641200.0000\Proj_Development\Design\Drawings\BRIDGES\04 OVER NY STREET\Structure 1901858\1901858_S_BR_MOT01.dwg Dylan Piercefield Plot:2/24/2020 6:05 AM Save:2/6/2020 9:01 AM

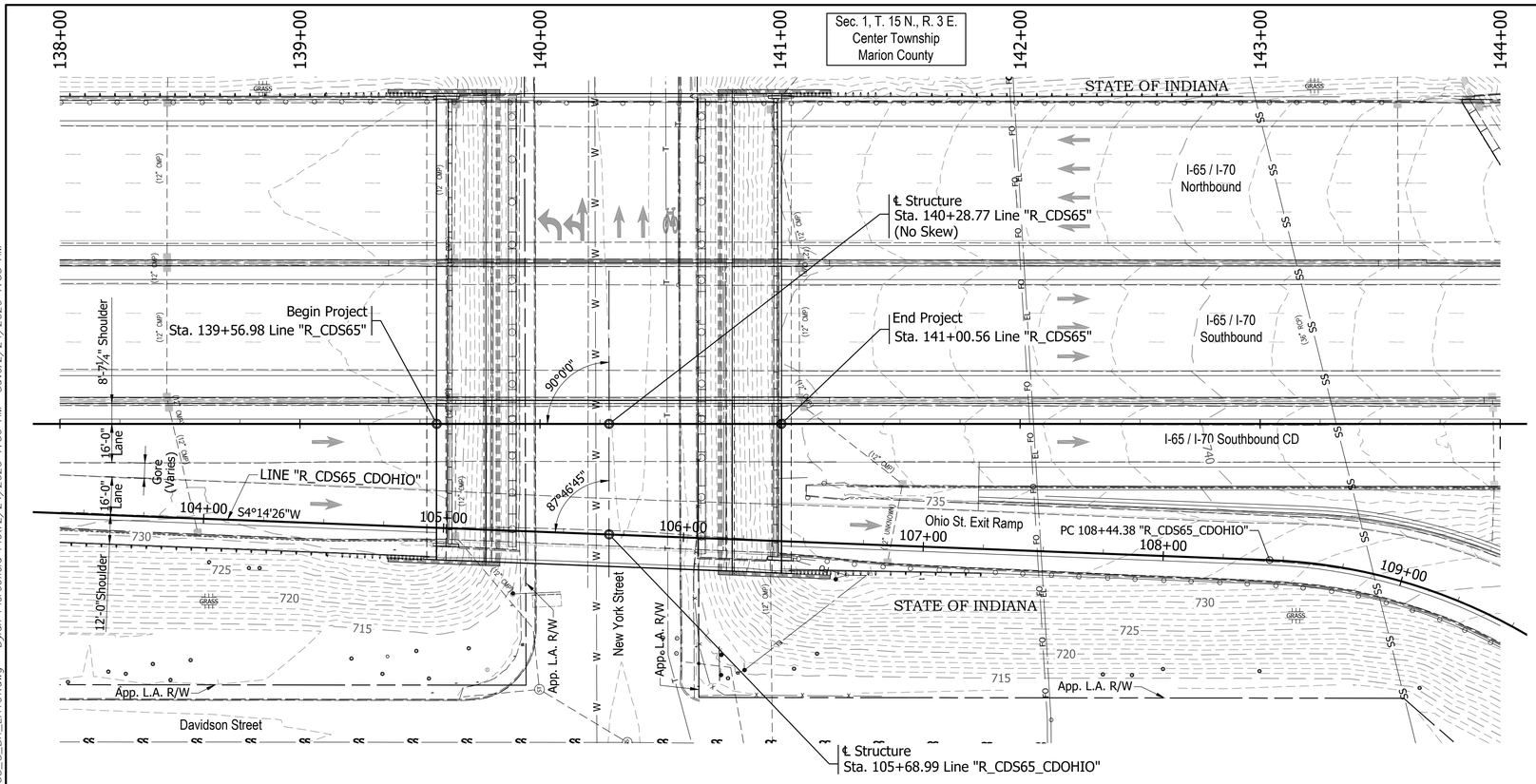

EXISTING STRUCTURE

The existing structure was built in 1974. Structure was rehabilitated in 2003. The structure is a 3-span continuous composite steel beam bridge.

Span lengths: 1 @ 31'-0", 1 @ 79'-0", 1 @ 26'-0"

Clear roadway varies 64'-5⅞" to 59'-0¼". Total length of 139'-6"

Existing structure to be removed.

Existing plans are on file with the Indiana Department of Transportation under Bridge File No. I-65-112-5730B.

EARTHWORK TABULATION

See Roadway Plans (DES #_____) for earthwork tabulation.

NOTE: ALL TOPOGRAPHY INFORMATION REFERENCED TO LINE "R_CDS65" UNLESS NOTED.

ALL R/W ON THIS SHEET DESCRIBED FROM LINE "R_CDS65" UNLESS OTHERWISE NOTED

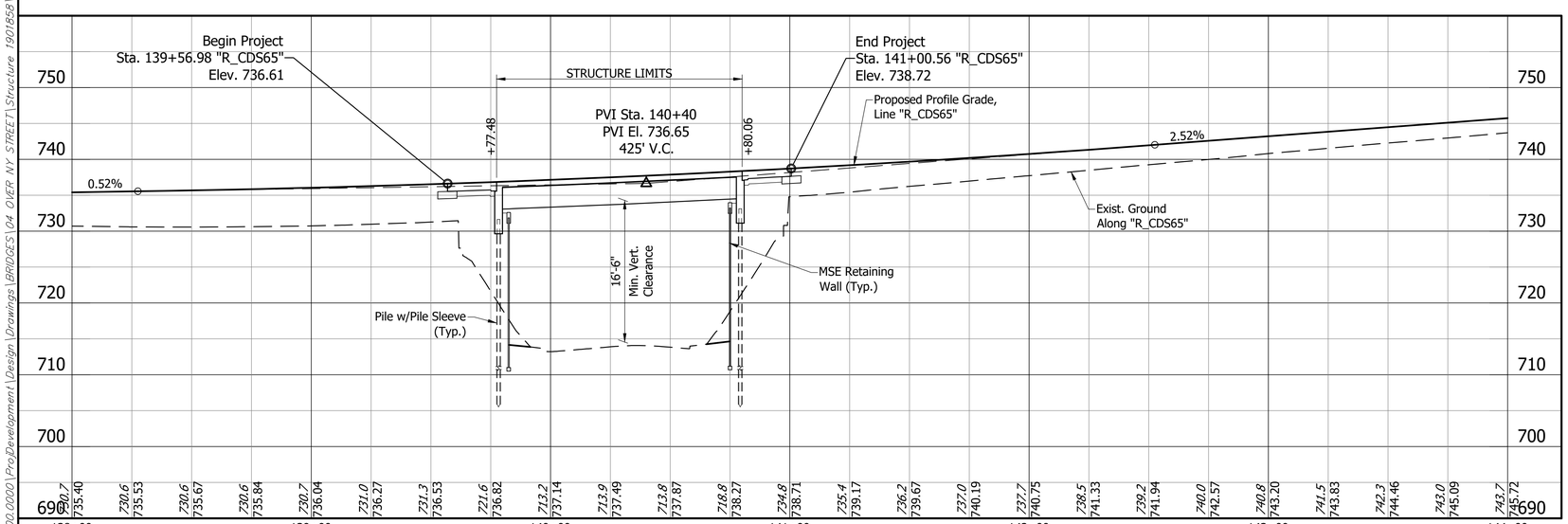

Notes:

1. For R/W and property information, see Location Control Route Survey (DES # _____).
2. For alignment data, see Geometric Layout Sheets (DES #_____).
3. See Road Plans (DES #_____) for Horizontal & Vertical Control Data.

PRESTRESSED COMPOSITE CONCRETE BULB-TEE BEAM BRIDGE
1 SPAN: 101'-0"
VARIES: 64'-4 7/8" TO 68'-3 7/8" CLEAR ROADWAY; SKEW: NO SKEW
I-65 / I-70 S.B. CD OVER NEW YORK STREET
MARION COUNTY

RECOMMENDED FOR APPROVAL: _____ DESIGN ENGINEER _____ DATE

DESIGNED: B. WRIGHT DRAWN: L. KIRSCH
CHECKED: V. SATHIRAJU CHECKED: B. WRIGHT

INDIANA
DEPARTMENT OF TRANSPORTATION

LAYOUT

HORIZONTAL SCALE	BRIDGE FILE
1" = 30'	I65-111-10609 CD
VERTICAL SCALE	DESIGNATION
1" = 10'	1901858
SURVEY BOOK	SHEET
ELECTRONIC	4 OF 15
CONTRACT	PROJECT
B-36910	1600808

BFS NO. 6412

\\bfsn1241\Jobs5\641200.0000\ProjDevelopment\Design\Drawings\BRIDGES\04 OVER NY STREET\Structure 1901858\1901858_S_BR_LAY01.dwg Dylan Piercefield Plot:2/24/2020 7:56 AM Save:2/24/2020 7:55 AM

STRUCTURE TO BE BUILT ON A 425' VERTICAL CURVE

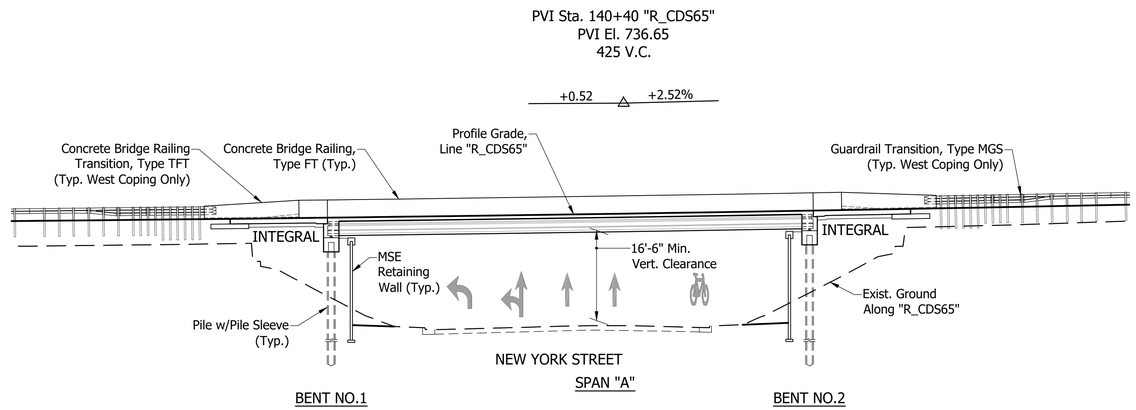

ELEVATION

Scale: 1/16" = 1'-0"

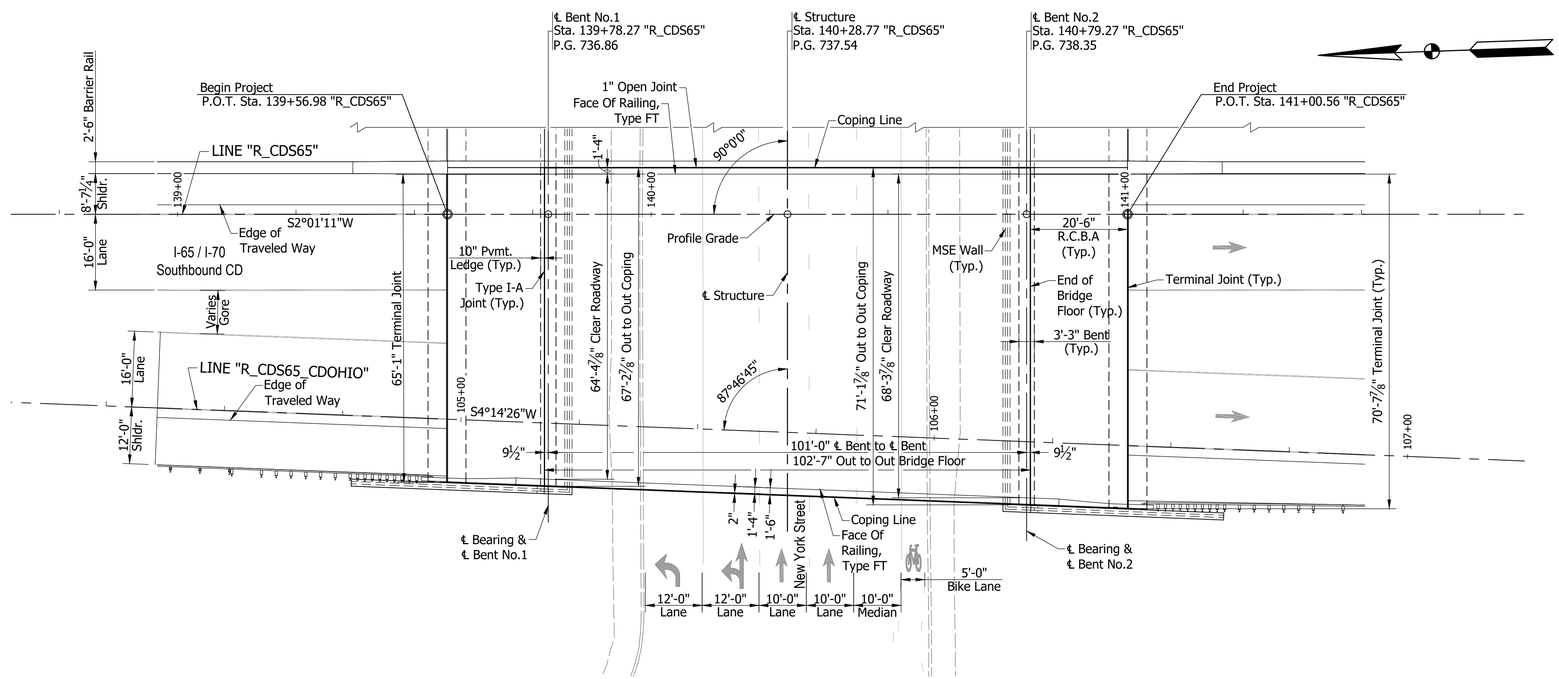

PLAN

Scale: 1/16" = 1'-0"

NOTE:
See Sheet 6 For Typical Section

PRESTRESSED COMPOSITE CONCRETE BULB-TEE BEAM BRIDGE
1 SPAN: 101'-0"
VARIES: 64'-4 7/8" TO 68'-3 7/8" CLEAR ROADWAY; SKEW: NO SKEW
I-65 / I-70 S.B. CD OVER NEW YORK STREET
MARION COUNTY

RECOMMENDED FOR APPROVAL: _____ DESIGN ENGINEER _____ DATE

DESIGNED: B. WRIGHT DRAWN: L. KIRSCH
CHECKED: V. SATHIRAJU CHECKED: B. WRIGHT

INDIANA
DEPARTMENT OF TRANSPORTATION

GENERAL PLAN - PLAN & ELEVATION VIEWS

HORIZONTAL SCALE	BRIDGE FILE
As Noted	I65-111-10609 CD
VERTICAL SCALE	DESIGNATION
N/A	1901858
SURVEY BOOK	SHEET
ELECTRONIC	5 OF 15
CONTRACT	PROJECT
B-36910	1600808

BFS NO. 6412

\\bfsnt241\Jobs5\641200.0000\ProjDevelopment\Design\Drawings\BRIDGES\04 OVER NY STREET\Structure 1901858\1901858_S-BR_PLN01.dwg Dylan Fiercefield Plot:2/24/2020 7:56 AM Save:2/24/2020 7:56 AM

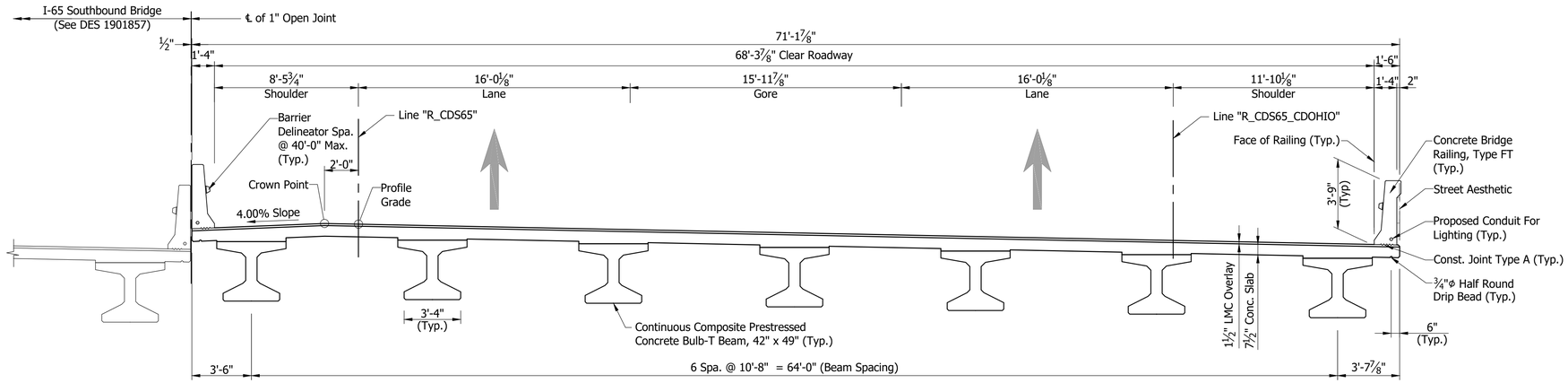

TYPICAL SECTION - WIDE SIDE (SOUTH)

Scale: 1/4"= 1'-0"

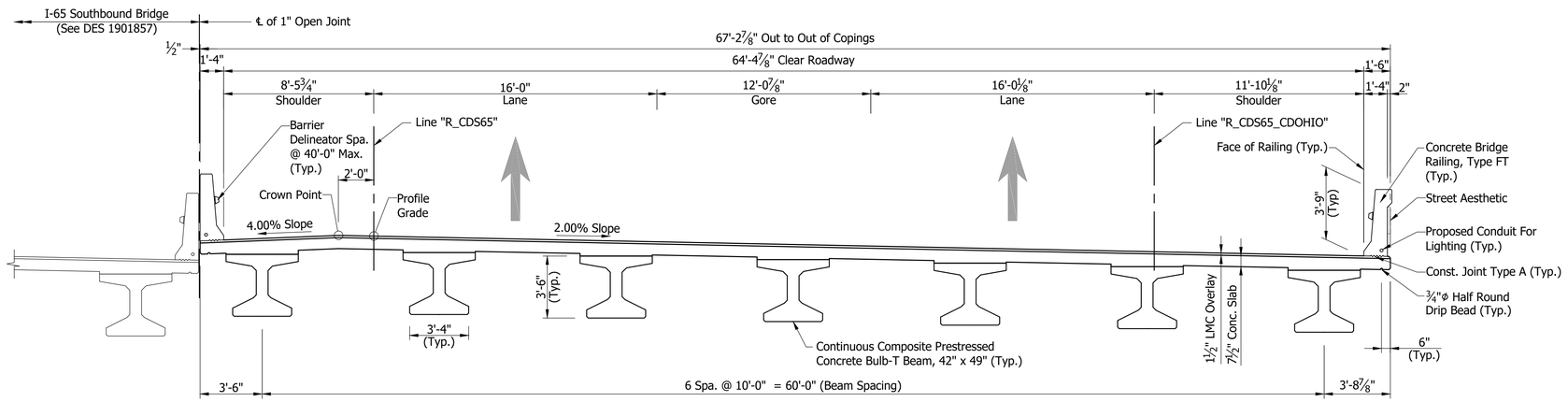

TYPICAL SECTION - NARROW SIDE (NORTH)

Scale: 1/4"= 1'-0"

GENERAL NOTES

Reinforcing bars covering shall be 3 ½" in top and 1" min. in bottom of floor slabs and 3" in footings except bottom steel which shall be 4", and 2" in all other parts, unless noted.

Concrete in floor slab, and diaphragms, barriers, and end bents shall be an alternate Class C in accordance with the Technical Provisions.

Reinforcing Bars in Deck, Barrier, and End Bent Diaphragm Extending into the Deck shall be Stainless Steel. Reinforcing Bars in End Bent Diaphragm not Extending into the Deck and in the Cap shall be Epoxy Coated.

All exposed faces of the MSE walls and reinforced concrete bridge approach slabs shall receive surface seal.

See Bridge Aesthetic Plan for Architectural Details.

DESIGN DATA

LIVE LOAD:

Superstructure and Substructure Designed for HL-93 loading in accordance with the AASHTO LRFD Bridge Design Specifications, 8th Edition, 2017 and its subsequent revisions.

DEAD LOAD:

Designed for Actual Dead Load plus 35 psf of future wearing surface, and 15 psf for SIP Metal Deck Forms.

FLOOR SLAB:

Slab designed with a 7 ½" structural depth and a 1 ½" very early strength LMC wearing surface.

CONSTRUCTION LOADING:

The exterior girder has been checked for strength, deflection, and overturning using the construction loads shown below. Cantilever overhang brackets were assumed for support of the deck overhang past the edge of the exterior beam. The finishing machine was assumed to be supported 6 in. outside the vertical coping form. The top overhang brackets were assumed to be located 6 in. past the edge of the vertical coping form. The bottom overhang brackets were assumed to be braced against the intersection of the girder bottom flange and web.

DECK FALSEWORK LOADS:

Designed for 15 psf for permanent metal stay-in-place deck forms, removable deck forms, and 2 ft. exterior walkway.

DESIGN STRESSES

CONSTRUCTION LIVE LOAD:

Designed for 20 psf extending 2 ft. past the edge of coping and 75 lb/ft vertical force applied at a distance of 6 in. outside the face of coping over a 30 foot length of the deck centered with the finishing machine.

FINISHING-MACHINE LOAD:

4500 lb distributed over 10 ft. along the coping.

WIND LOAD:

Designed for 70 mph horizontal wind load in accordance with LRFD 3.8.1.

ULTIMATE DESIGN STRENGTHS:

Class "A" Concrete	f'c = 3,500 p.s.i.
Class "B" Concrete	f'c = 3,000 p.s.i.
Class "C" Concrete	f'c = 4,000 p.s.i.
Reinforcing Steel (Grade 60)	Fy = 60,000 p.s.i. (barrier)
	Fy = 75,000 p.s.i. (deck)
	Fy = 75,000 p.s.i. (all other locations)

SEISMIC DESIGN DATA:

Seismic Site Class	C
PGA (g)	0.051
S_s (g)	0.12
S_1 (g)	0.051
S_{D1} (g)	0.086
Seismic Design Category	A

PRESTRESSED COMPOSITE CONCRETE BULB-TEE BEAM BRIDGE
1 SPAN: 101'-0"
VARIES: 64'-4 7/8" TO 68'-3 7/8" CLEAR ROADWAY; SKEW: NO SKEW
I-65 / I-70 S.B. CD OVER NEW YORK STREET
MARION COUNTY

RECOMMENDED FOR APPROVAL: _____ DESIGN ENGINEER _____ DATE

DESIGNED: B. WRIGHT DRAWN: L. KIRSCH
CHECKED: M. EICHENAUER CHECKED: B. WRIGHT

INDIANA
DEPARTMENT OF TRANSPORTATION

GENERAL PLAN - TYPICAL SECTION

HORIZONTAL SCALE	BRIDGE FILE
As Noted	I65-111-10609 CD
VERTICAL SCALE	DESIGNATION
N/A	1901858
SURVEY BOOK	SHEET
ELECTRONIC	6 OF 15
CONTRACT	PROJECT
B-36910	1600808

BFS NO. 6412

\\bfsn1241\Jobs5\641200.0000\Pro/Development\Design\Drawings\BRIDGES\04 OVER NY STREET\Structure 1901858\1901858_S_BR_PLN02.dwg Dylan Fiercefield Plot:2/24/2020 11:45 AM Save:2/24/2020 11:39 AM

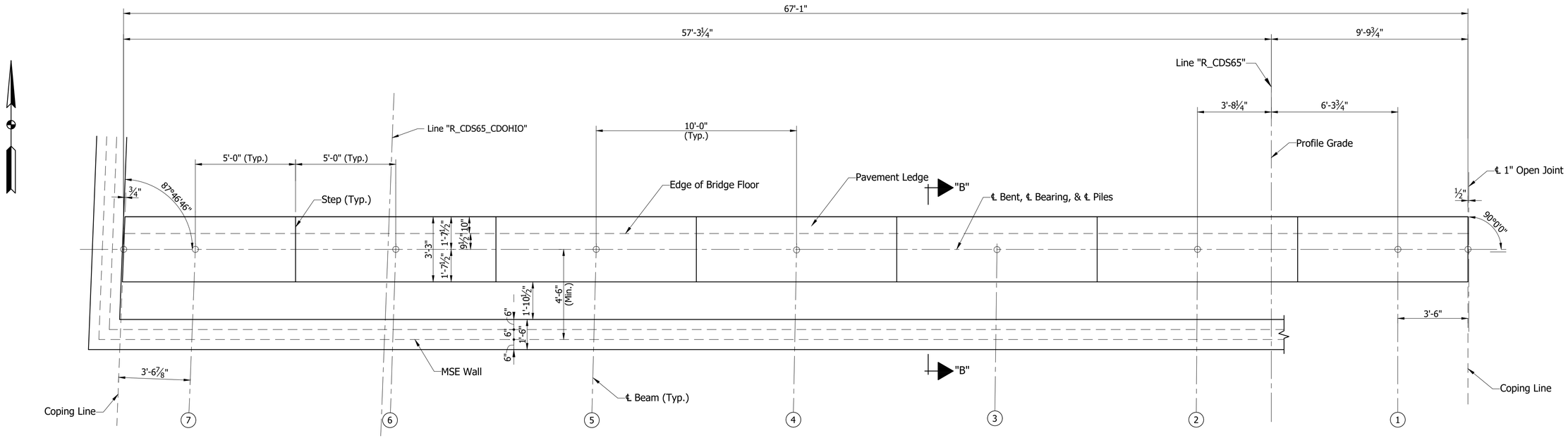

PLAN

Scale: ⅜"=1'-0"

SEAT ELEVATIONS							
Beam No.	7	6	5	4	3	2	1
Bent No.1	730.84	731.02	731.19	731.37	731.55	731.72	731.66

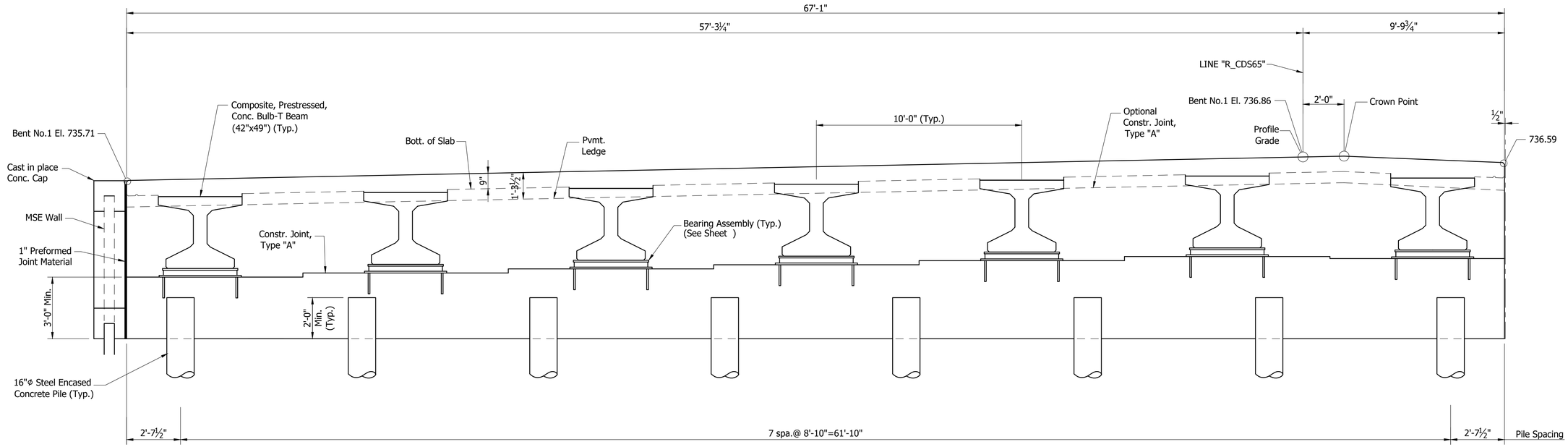

SECTION ALONG ℄ BENT

Scale: ⅜"=1'-0"

RECOMMENDED FOR APPROVAL: _____ DESIGN ENGINEER DATE

DESIGNED: B. WRIGHT DRAWN: D. SHEETZ

CHECKED: V. SATHIRAJU CHECKED: B. WRIGHT

INDIANA
DEPARTMENT OF TRANSPORTATION

BENT NO. 1 DETAILS

HORIZONTAL SCALE	BRIDGE FILE
As Noted	I65-111-10609 CD
VERTICAL SCALE	DESIGNATION
N/A	1901858
SURVEY BOOK	SHEET
ELECTRONIC	7 OF 15
CONTRACT	PROJECT
B-36910	1600808

BFS NO. 6412

\\bfsn1241\jobs5\641200.0000\Proj.Development\Design\Drawings\BRIDGES\04 OVER NY STREET\Structure 1901858\1901858_S_BR_BNT01.dwg Dylan Piercefield Plot:2/24/2020 11:45 AM Save:2/24/2020 11:40 AM

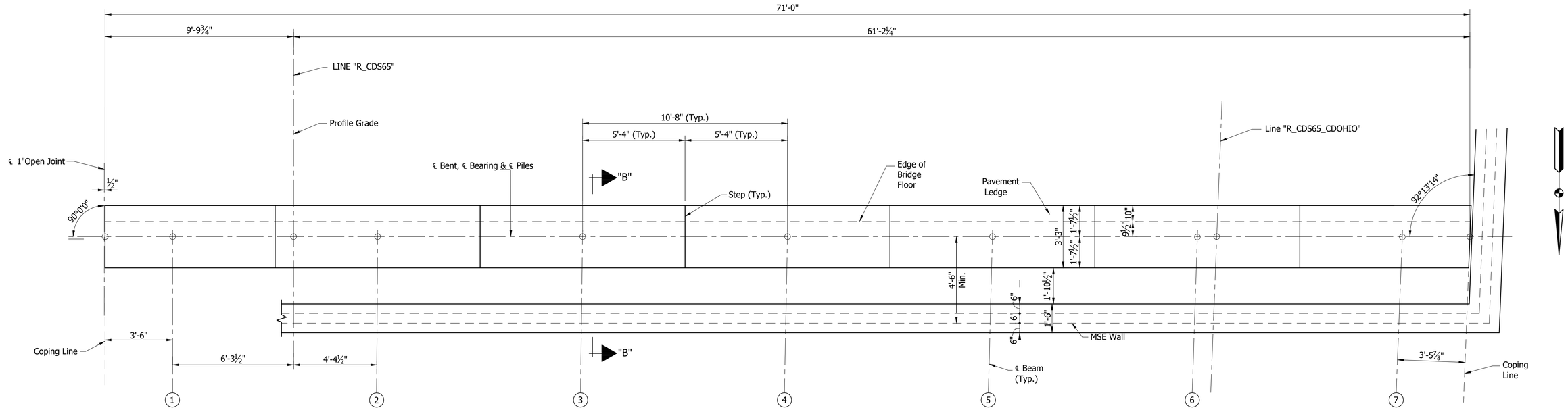

PLAN

Scale: ⅜"=1'-0"

SEAT ELEVATIONS							
Beam No.	1	2	3	4	5	6	7
Bent No.2	733.36	733.41	733.19	732.98	732.77	732.55	732.34

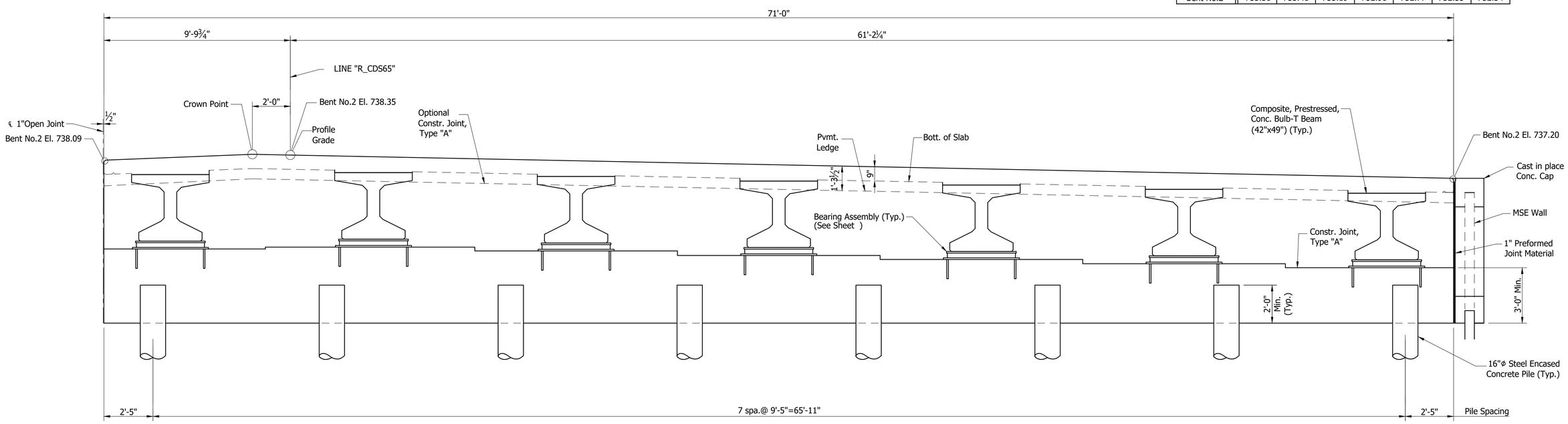

SECTION ALONG ℄ BENT

Scale: ⅜"=1'-0"

RECOMMENDED FOR APPROVAL: DESIGN ENGINEER DATE	INDIANA DEPARTMENT OF TRANSPORTATION	HORIZONTAL SCALE: As Noted	BRIDGE FILE: I65-111-10609 CD
		VERTICAL SCALE: N/A	DESIGNATION: 1901858
DESIGNED: B. WRIGHT DRAWN: D. SHEETZ	BENT NO. 2 DETAILS	SURVEY BOOK: ELECTRONIC	SHEET: 8 OF 15
CHECKED: V. SATHIRAJU CHECKED: B. WRIGHT		CONTRACT: B-36910	PROJECT: 1600808

BFS NO. 6412

\\bfsn1241\Jobs5\641200.0000\Proj Development\Design\Drawings\BRIDGES\04 OVER NY STREET\Structure 1901858\1901858_S_BR_BNT01A - BENT DETAIL.dwg Dylan Piercefield Plot: 2/24/2020 11:45 AM Save: 2/24/2020 11:42 AM

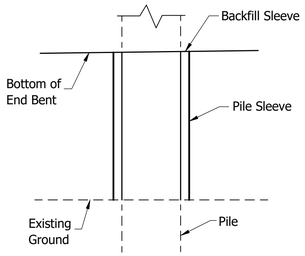

PILE SLEEVE DETAIL

Not to Scale

⊛ As an alternate a ⅞"øx1'-3" Long Headed Automatic Welded Stud may be used.

⊗ Setting Tolerance of Bottom Plate-Level with to not more than 1/16" below top of Concrete.

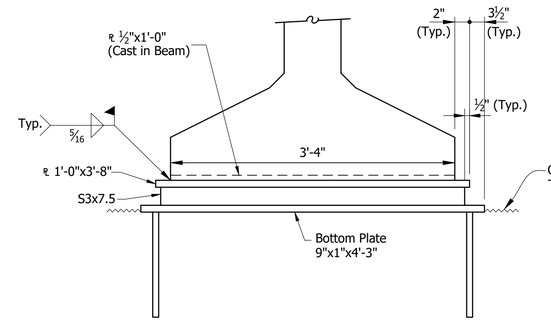

ELEVATION

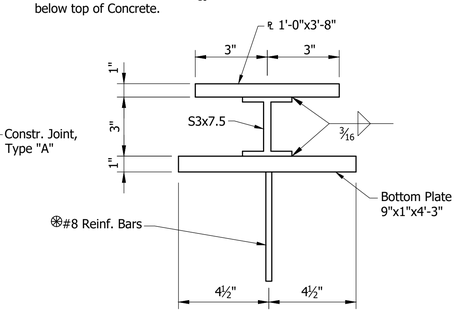

SECTION

BEARING ASSEMBLY

Not to Scale

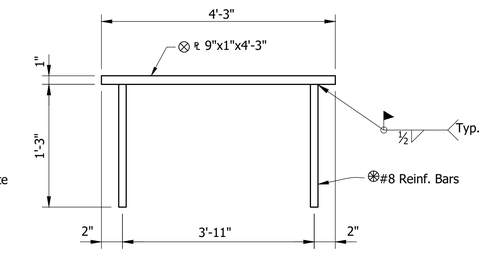

BOTTOM PLATE DETAIL

Not to Scale

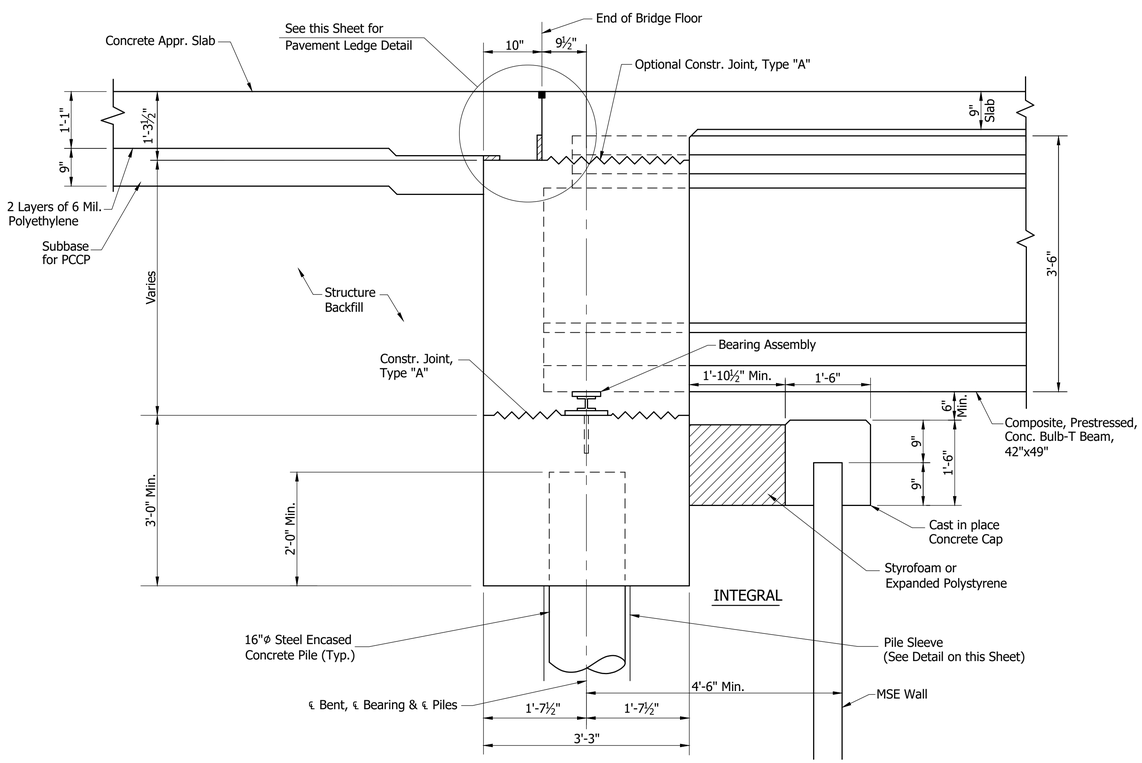

SECTION "B-B"

Not to Scale

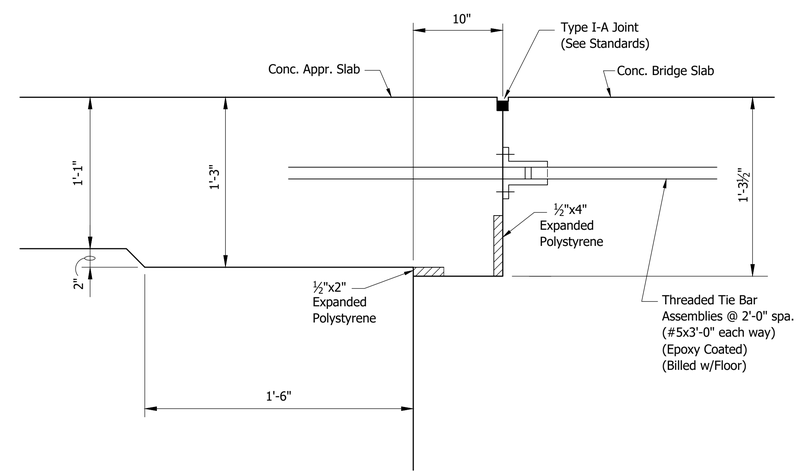

PAVEMENT LEDGE DETAIL

Not to Scale

RECOMMENDED FOR APPROVAL: _____ DESIGN ENGINEER DATE	INDIANA DEPARTMENT OF TRANSPORTATION	HORIZONTAL SCALE: As Noted	BRIDGE FILE: I65-111-10609 CD
		VERTICAL SCALE: N/A	DESIGNATION: 1901858
DESIGNED: B. WRIGHT DRAWN: D. SHEETZ	BENT DETAILS	SURVEY BOOK: ELECTRONIC	SHEET: 9 OF 15
CHECKED: V. SATHIRAJU CHECKED: B. WRIGHT		CONTRACT: B-36910	PROJECT: 1600808

BFS NO. 6412

\\bfsn1241\jobs5\641200.0000\Proj\Development\Design\Drawings\BRIDGES\04 OVER NY STREET\Structure 1901858\1901858_S_BR_BNT02.dwg Dylan Piercefield Plot:2/24/2020 6:07 AM Save:2/17/2020 5:17 PM

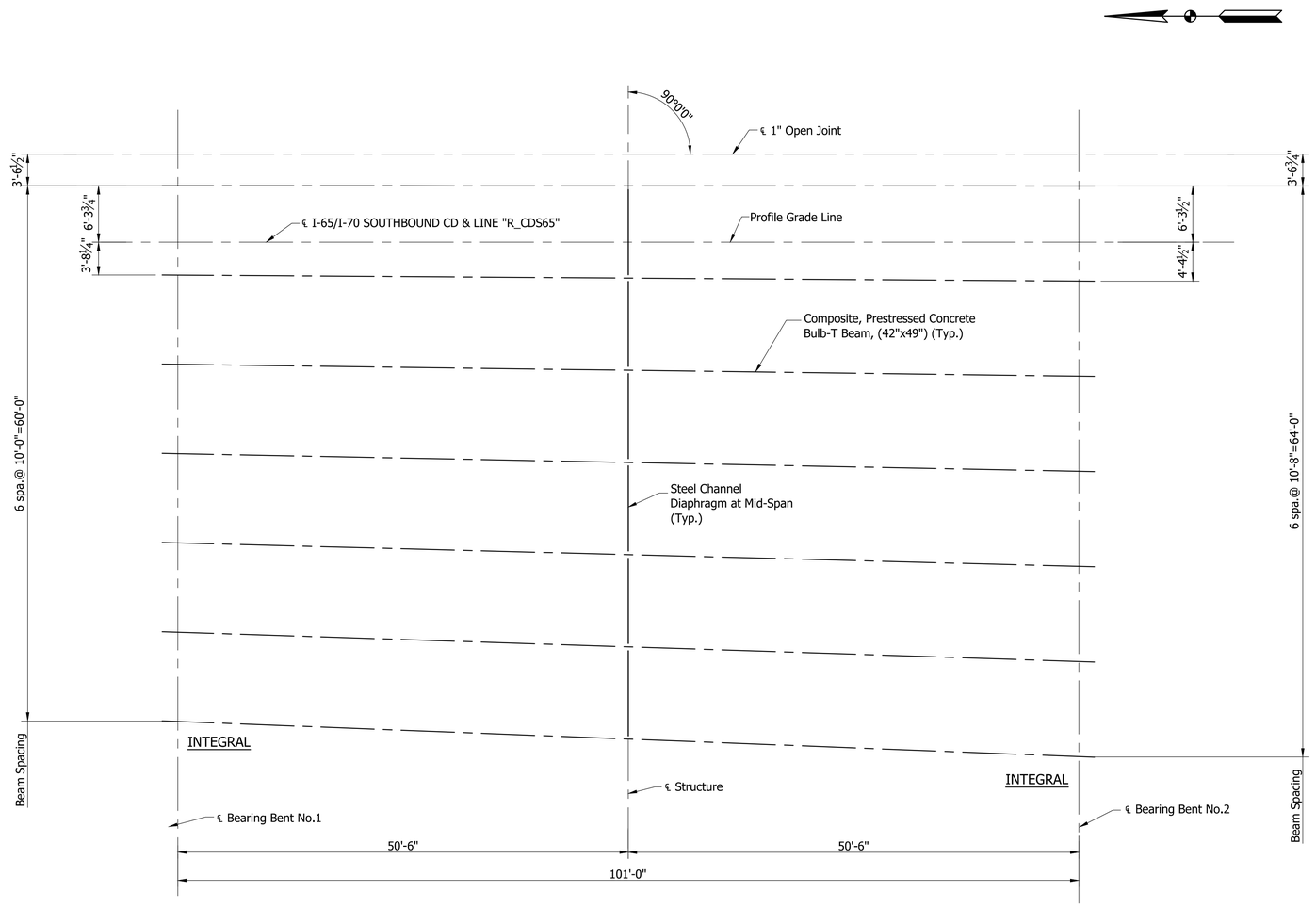

BEAM ERECTION PLAN

Scale: 1/8" = 1'-0"

RECOMMENDED FOR APPROVAL: DESIGN ENGINEER DATE	INDIANA DEPARTMENT OF TRANSPORTATION	HORIZONTAL SCALE: As Noted	BRIDGE FILE: I65-111-10609 CD
		VERTICAL SCALE: N/A	DESIGNATION: 1901858
DESIGNED: V. SATHIRAJU DRAWN: D. SHEETZ	FRAMING PLAN	SURVEY BOOK: ELECTRONIC	SHEET: 10 OF 15
CHECKED: B. WRIGHT CHECKED: M. MATEL		CONTRACT: B-36910	PROJECT: 1600808

BFS NO. 6412

\\bfsn1241\jobs5\641200.0000\Proj\Development\Design\Drawings\BRIDGES\04 OVER NY STREET\Structure 1901858\1901858_S_BR_FRM01.dwg Dylan Piercefield Plot-2/24/2020 6:07 AM Save:12/23/2019 9:40 AM

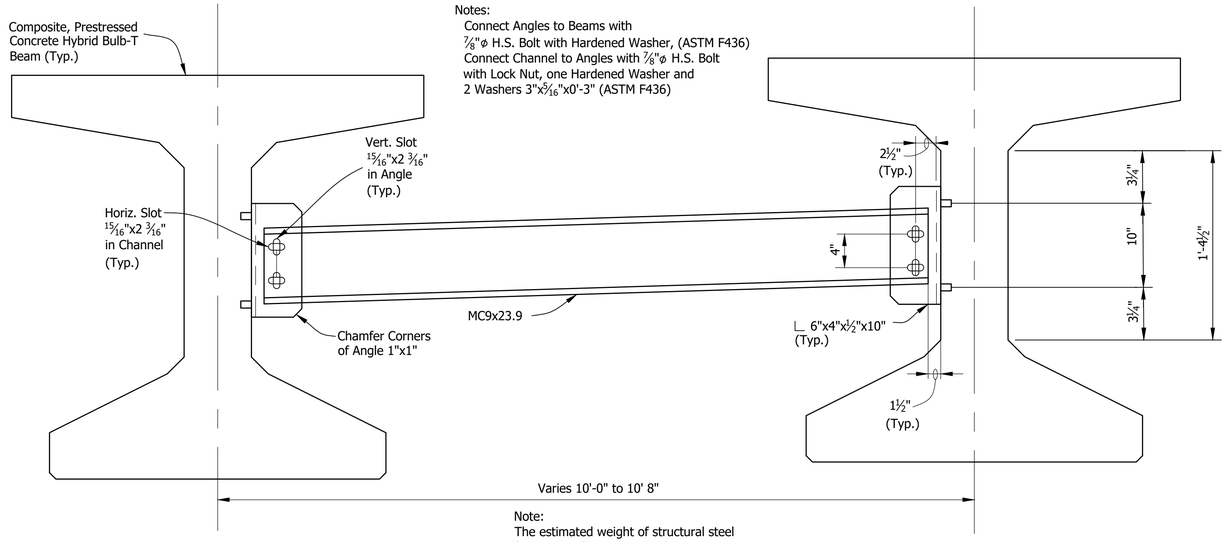

Note:
The estimated weight of structural steel for one Diaphragm is 231 Lbs.

ELEVATION

Not to Scale

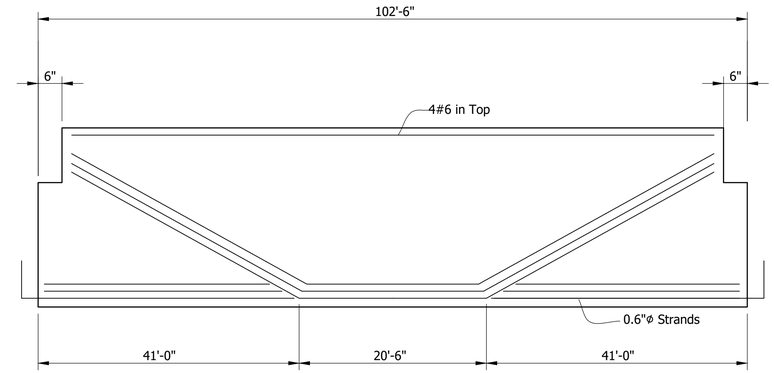

BEAM ELEVATION
SPAN "A" (SHOWN) SPAN "B" (OPP. HAND)
SHOWING DRAPED STRANDS

Not to Scale

✳ Denotes Epoxy Coated

Note:
Bars 1" Clear unless noted.

1. Surface Seal req'd on top of all Beams and Exterior Face of Exterior Beams
2. 1"ϕ Holes or ¾"ϕ Inserts for Dowels at Bent or Pier. (See Beam Plans)
3. PL ½"x12"x3'-2½" at End Bent Ends only

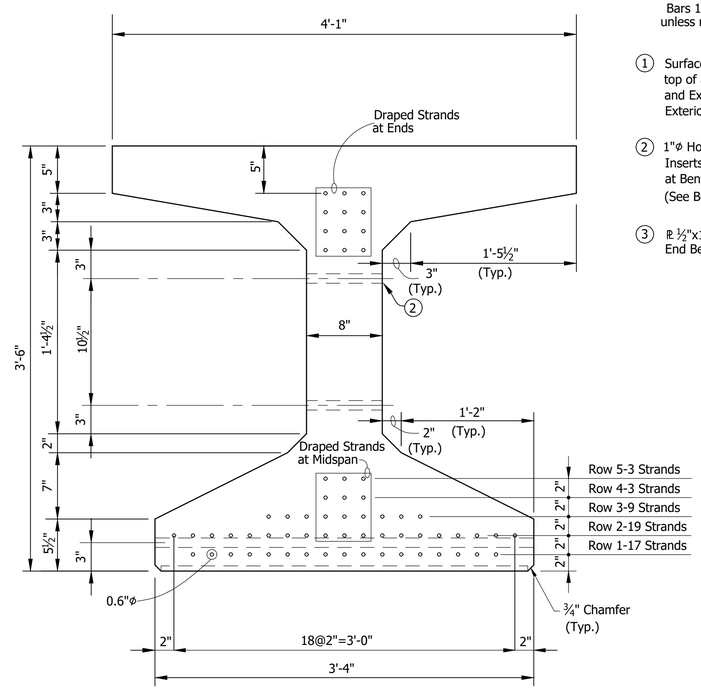

SECTION SHOWING STRANDS

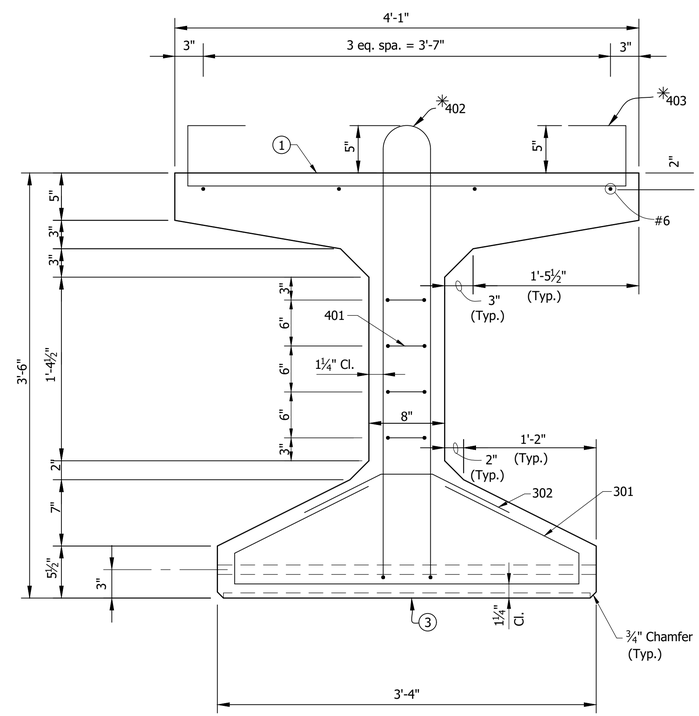

BEAM SECTIONS

Not to Scale

RECOMMENDED FOR APPROVAL: DESIGN ENGINEER DATE	INDIANA DEPARTMENT OF TRANSPORTATION	HORIZONTAL SCALE: As Noted	BRIDGE FILE: I65-111-10609 CD
		VERTICAL SCALE: N/A	DESIGNATION: 1901858
DESIGNED: V. SATHIRAJU DRAWN: K. COFFMAN	BEAM DETAILS	SURVEY BOOK: ELECTRONIC	SHEET: 11 OF 15
CHECKED: B. WRIGHT CHECKED: B. WRIGHT		CONTRACT: B-36910	PROJECT: 1600808

BFS NO. 6412

\\bfsn1241\jobs5\641200.0000\ProjDevelopment\Design\Drawings\BRIDGES\04 OVER NY STREET\Structure 1901858\1901858_S_BR_BMD01.dwg Dylan Piercefield Plot:2/24/2020 6:07 AM Save:12/10/2019 12:46 PM

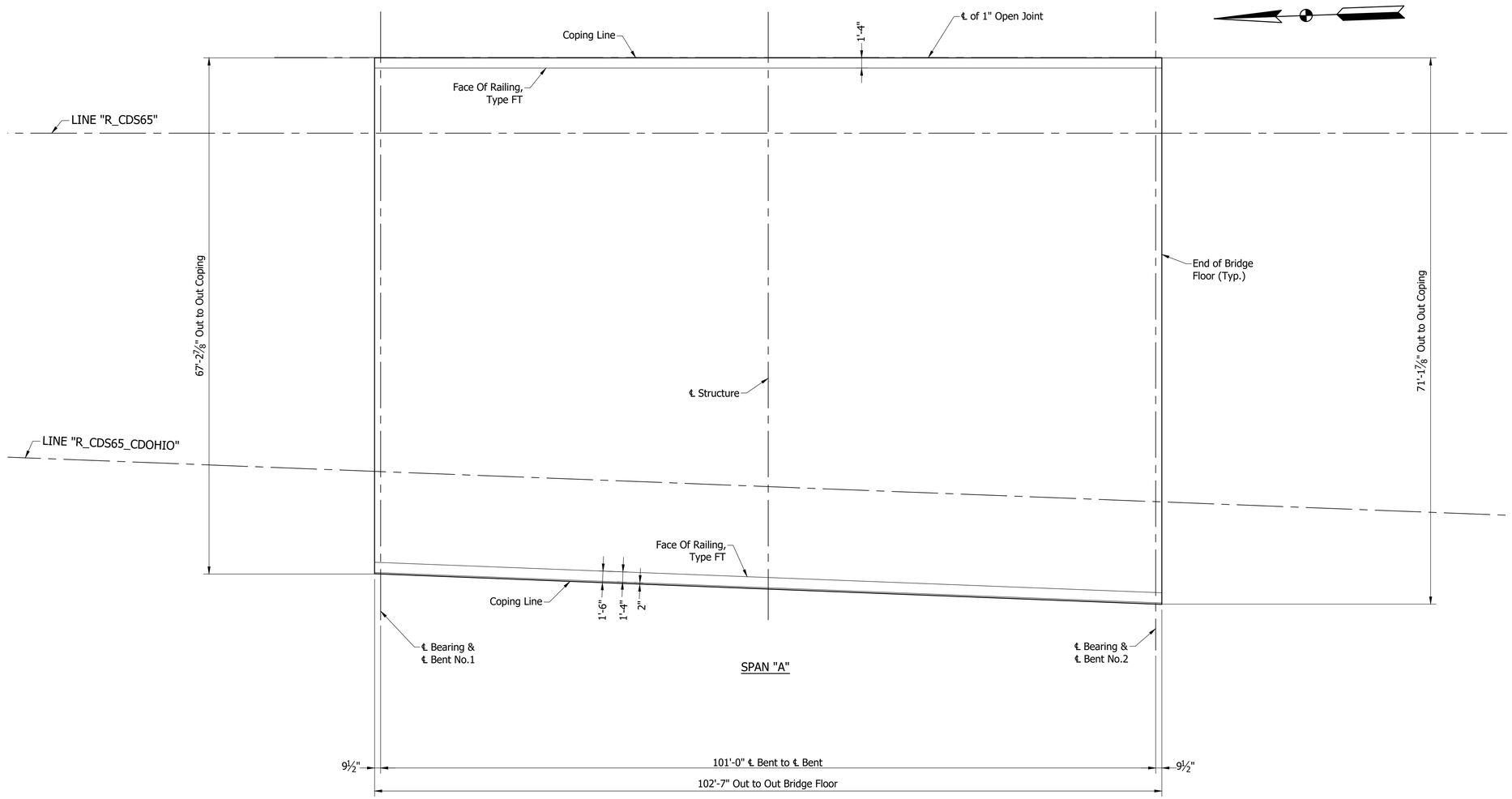

FLOOR PLAN

Scale: 1/8" = 1'-0"

NOTE:
See Sheet ___ For _____

RECOMMENDED FOR APPROVAL: _____ DESIGN ENGINEER _____ DATE	INDIANA DEPARTMENT OF TRANSPORTATION	HORIZONTAL SCALE: As Noted	BRIDGE FILE: I65-111-10609 CD	
		VERTICAL SCALE: N/A	DESIGNATION: 1901858	
DESIGNED: B. WRIGHT DRAWN: D. PIERCEFIELD	FLOOR DETAILS	SURVEY BOOK: ELECTRONIC	SHEET: 12 OF 15	
CHECKED: M. EICHENAUER CHECKED: B. WRIGHT		CONTRACT: B-36910	PROJECT: 1600808	

BFS NO. 6412

\\bfsn1241\Jobs5\641200.0000\ProjDevelopment\Design\Drawings\BRIDGES\04 OVER NY STREET\Structure 1901858\1901858_S_BR_FLR01.dwg Dylan Piercefield Plot:2/24/2020 6:07 AM Save:1/31/2020 6:53 AM

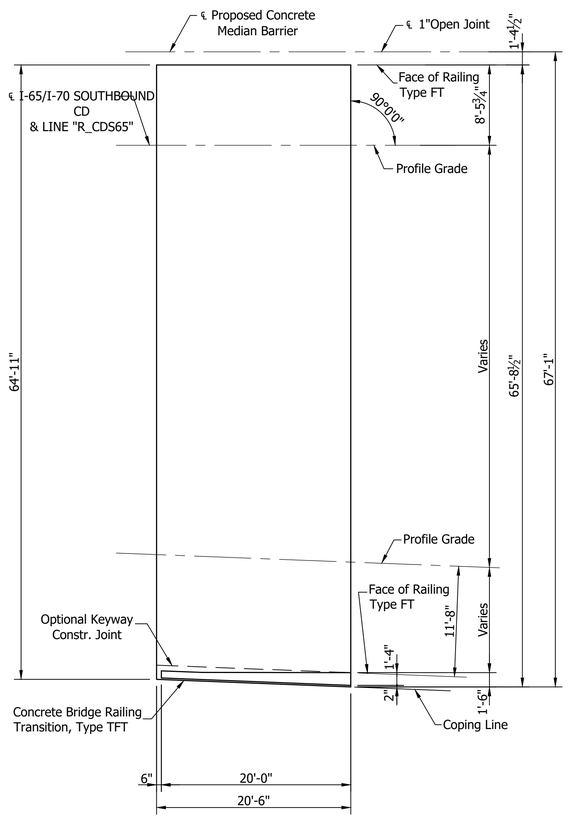

PLAN
NORTH SLAB
Scale: ⅛"=1'-0"

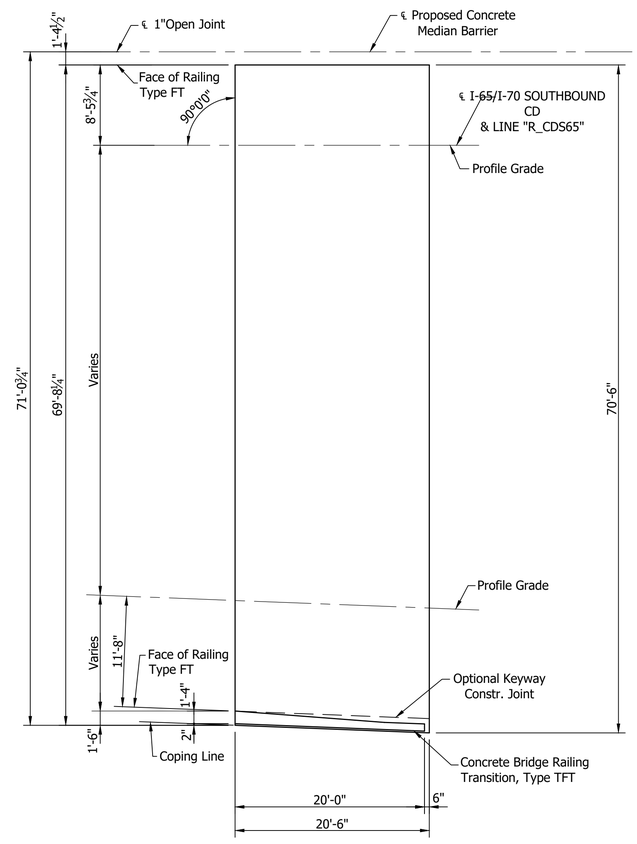

PLAN
SOUTH SLAB
Scale: ⅛"=1'-0"

RECOMMENDED FOR APPROVAL: DESIGN ENGINEER DATE	INDIANA DEPARTMENT OF TRANSPORTATION	HORIZONTAL SCALE: As Noted	BRIDGE FILE: I65-111-10609 CD	
		VERTICAL SCALE: N/A	DESIGNATION: 1901858	
DESIGNED: D. SHEETZ DRAWN: D. SHEETZ	APPROACH SLAB	SURVEY BOOK: ELECTRONIC	SHEET: 13 OF 15	
CHECKED: B. WRIGHT CHECKED: M. MATEL		CONTRACT: B-36910	PROJECT: 1600808	

6412
BFS NO.

\\bfsn1241\jobs5\641200.0000\Proj\Development\Design\Drawings\BRIDGES\04 OVER NY STREET\Structure 1901858\1901858_S_BR_AP301 - APPROACH SLAB.dwg Dylan Piercefield Plot:2/24/2020 6:07 AM Save:1/28/2020 1:47 PM

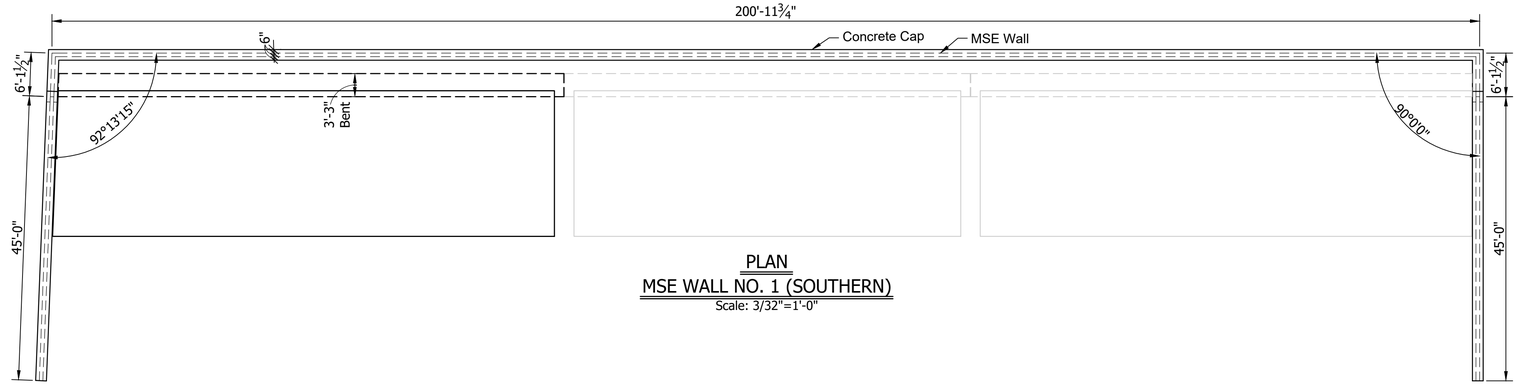

PLAN
MSE WALL NO. 1 (SOUTHERN)
Scale: 3/32"=1'-0"

NOTE:
Elevation Looking At Back Face of Wall

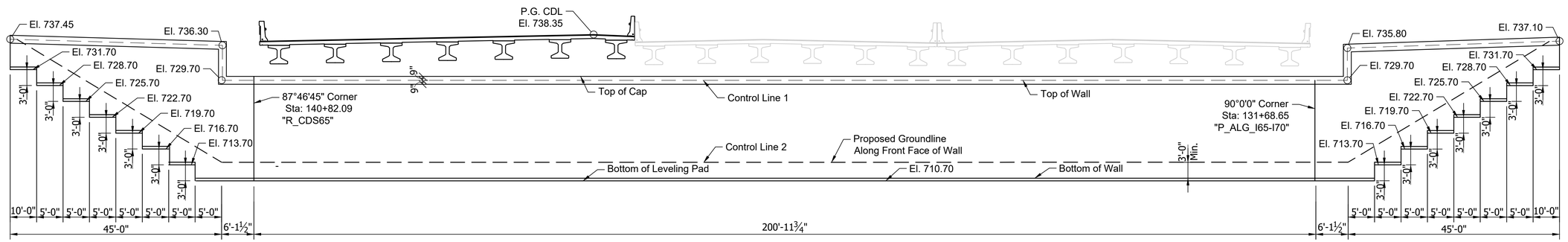

ELEVATION
MSE WALL NO. 1 (SOUTHERN)
Scale: 3/32"=1'-0"

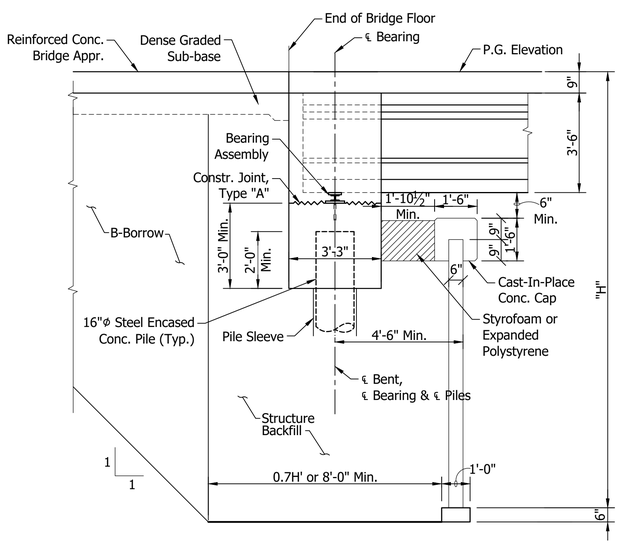

SECTION
MSE WALL NO. 1
Scale: 3/8"=1'-0"

RECOMMENDED FOR APPROVAL: DESIGN ENGINEER DATE	INDIANA DEPARTMENT OF TRANSPORTATION	HORIZONTAL SCALE: As Noted	BRIDGE FILE: I65-111-10609 CD
		VERTICAL SCALE: N/A	DESIGNATION: 1901858
DESIGNED: B. WRIGHT DRAWN: D. PIERCEFIELD	WALL LAYOUT	SURVEY BOOK: ELECTRONIC	SHEET: 14 OF 15
CHECKED: M. EICHENAUER CHECKED: B. WRIGHT		CONTRACT: B-36910	PROJECT: 1600808

BFS NO. 6412

\\bfsnt241\Job5\641200.0000\ProDevelopment\Design\Drawings\BRIDGES\04 OVER NY STREET\Structure 1901858\1901858_S_BR_WL01.dwg Dylan Piercefield Plot:2/24/2020 11:45 AM Save:2/24/2020 11:44 AM

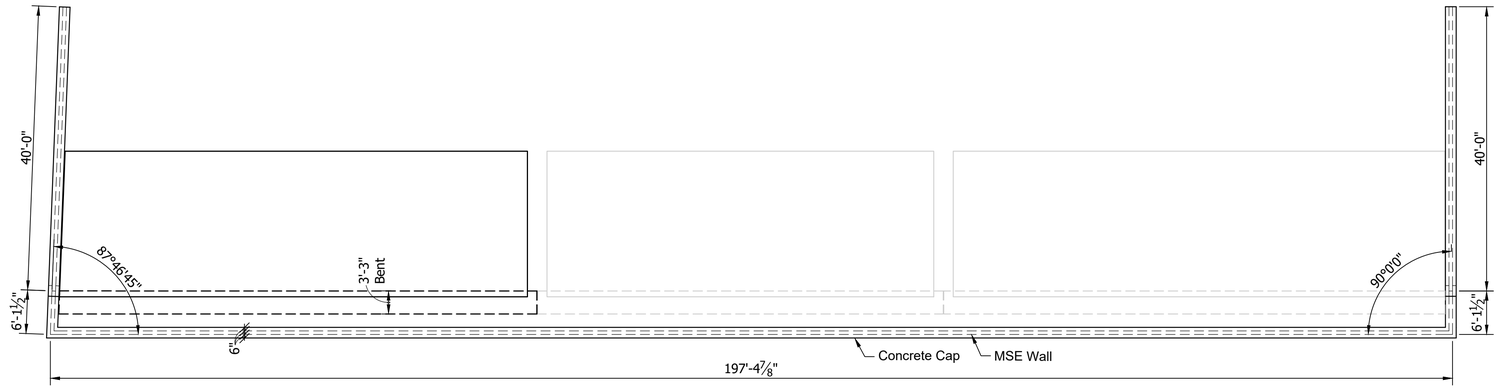

PLAN
MSE WALL NO. 2 (NORTHERN)
Scale: 3/32"=1'-0"

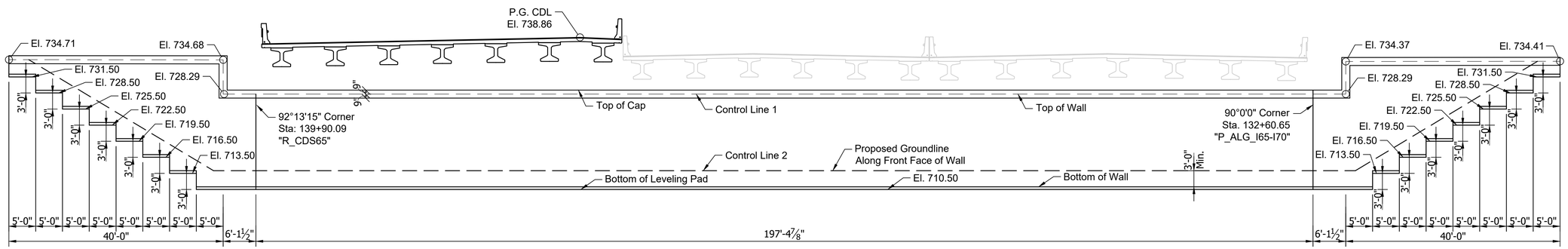

ELEVATION
MSE WALL NO. 2 (NORTHERN)
Scale: 3/32"=1'-0"

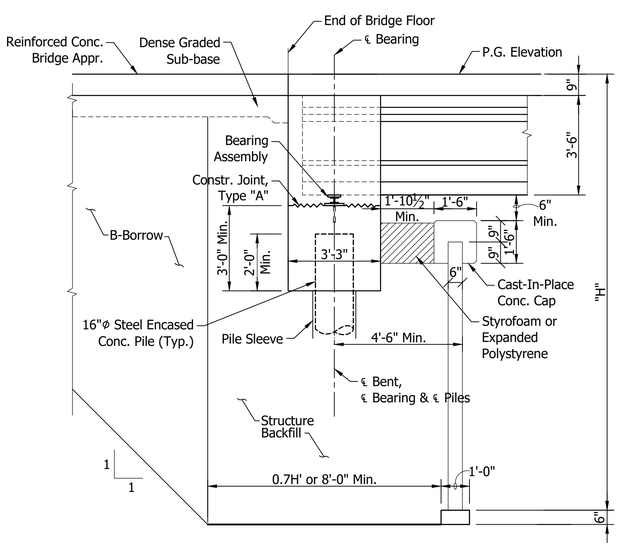

SECTION
MSE WALL NO. 2
Scale: 3/8"=1'-0"

	RECOMMENDED FOR APPROVAL: DESIGN ENGINEER DATE	INDIANA DEPARTMENT OF TRANSPORTATION	HORIZONTAL SCALE: AS NOTED	BRIDGE FILE: I65-111-10609 CD
			VERTICAL SCALE: AS NOTED	DESIGNATION: 1901858
	DESIGNED: B. WRIGHT DRAWN: D. PIERCEFIELD	WALL LAYOUT	SURVEY BOOK: ELECTRONIC	SHEET: 15 OF 15
	CHECKED: M. EICHENAUER CHECKED: B. WRIGHT		CONTRACT: B-36910	PROJECT: 1600808

BFS NO. 6412

\\bfsn\241\Jobs5\641200.0000\ProjDevelopment\Design\Drawings\BRIDGES\04 OVER NY STREET\Structure 1901858\1901858_S_BR_WLL02.dwg Dylan Piercefield Plot:2/24/2020 11:45 AM Save:2/24/2020 11:45 AM

PROJECT	DESIGNATION
1600808	1902179
CONTRACT	BRIDGE FILE
B-36910	I65-111-10656 NB

STRUCTURE INFORMATION

STRUCTURE	TYPE	SPAN & SKEW	OVER	STATION
I65-111-10656 NB	CONTINUOUS COMPOSITE PRE-STRESSED CONCRETE I-BEAM TYPE II BRIDGE	1 SPAN: 67'-6" SKEW: 00°15'00" LT.	VERMONT STREET	137+19.63 LINE "P_ALG_I65-I70"

INDIANA DEPARTMENT OF TRANSPORTATION

TRAFFIC DATA	I-65 / I-70 N.B.	I-65 / I-70 S.B.	I-65 / I-70 S.B. CD	VERMONT STREET
A.D.T. (2021)	62,989 V.P.D.	58,288 V.P.D.	18,922 V.P.D.	1519 V.P.D.
A.D.T. (2041)	76,198 V.P.D.	64,063 V.P.D.	18,473 V.P.D.	545 V.P.D.
D.H.V. (2041)	6,553 V.P.H.	5,125 V.P.H.	2,511 V.P.H.	66 V.P.H.
DIRECTIONAL DISTRIBUTION	100 %	100 %	100 %	61 %
TRUCKS	9 % D.H.V.	10 % D.H.V.	5 % D.H.V.	9 % D.H.V.

DESIGN DATA				
DESIGN SPEED	55 M.P.H.	55 M.P.H.	55 M.P.H.	30 M.P.H.
PROJECT DESIGN CRITERIA	COMPLETE RECONSTRUCTION (FREEWAY)			N/A
FUNCTIONAL CLASSIFICATION	URBAN FREEWAY			LOCAL ROAD
RURAL/URBAN	URBAN (BUILT-UP)			URBAN (BUILT-UP)
TERRAIN	LEVEL			LEVEL
ACCESS CONTROL	FULL			FULL

BRIDGE PLANS

FOR SPANS OVER 20 FEET

ROUTE: I-65 / I-70 N.B. AT: RP 111+59

PROJECT NO. 1600808 P.E.

1600808 CONST.

NO ADDITIONAL RIGHT OF WAY REQUIRED FOR THIS PROJECT

BRIDGE REPLACEMENT ON I-65 / I-70 N.B OVER VERMONT STREET
LOCATED 1.33 MILES NORTH OF I-70 (SOUTH SPLIT) INTERCHANGE
IN SECTION 1, TOWNSHIP 15 NORTH, RANGE 3 EAST
CENTER TOWNSHIP, MARION COUNTY INDIANA

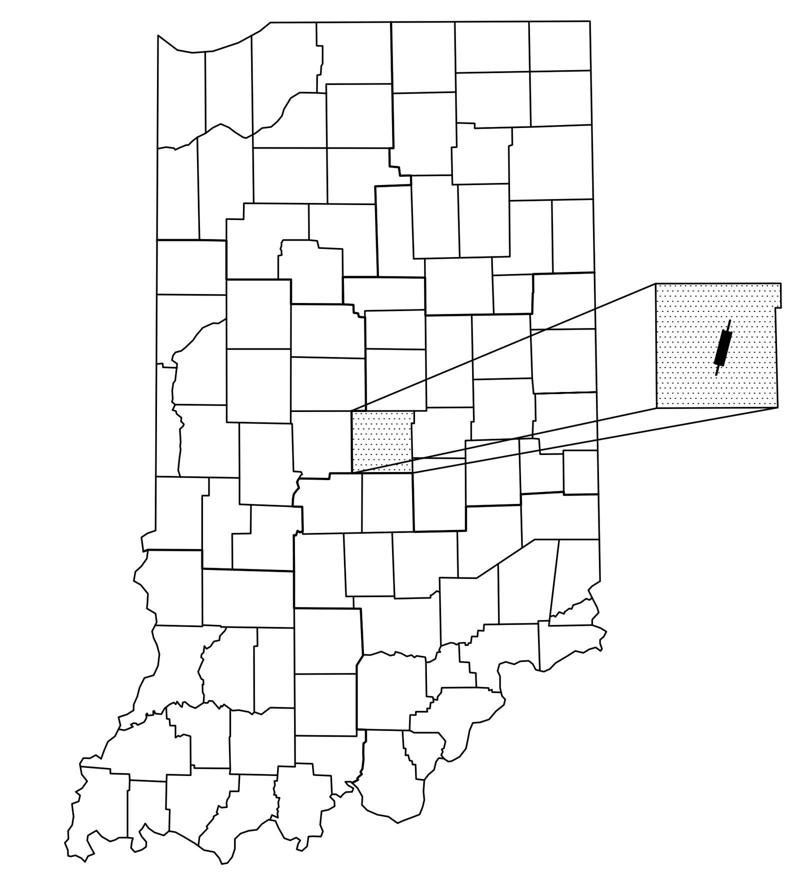

LATITUDE: 39°46'21" N LONGITUDE: 86°08'34" W

BRIDGE LENGTH :	0.013 MI.
ROADWAY LENGTH :	SEE ROAD PLANS
TOTAL LENGTH :	SEE ROAD PLANS
MAX GRADE :	1.33%

HUC: 05120201130020

END PROJECT No. 1600808
STATION 25+75.00 LINE "P_ALG_I65"

END PROJECT No. 1600808
STATION 41+85.70 LINE "P_ALG_I70"

R. 3 E. | R. 4 E.

T. 16 N.

T. 15 N.

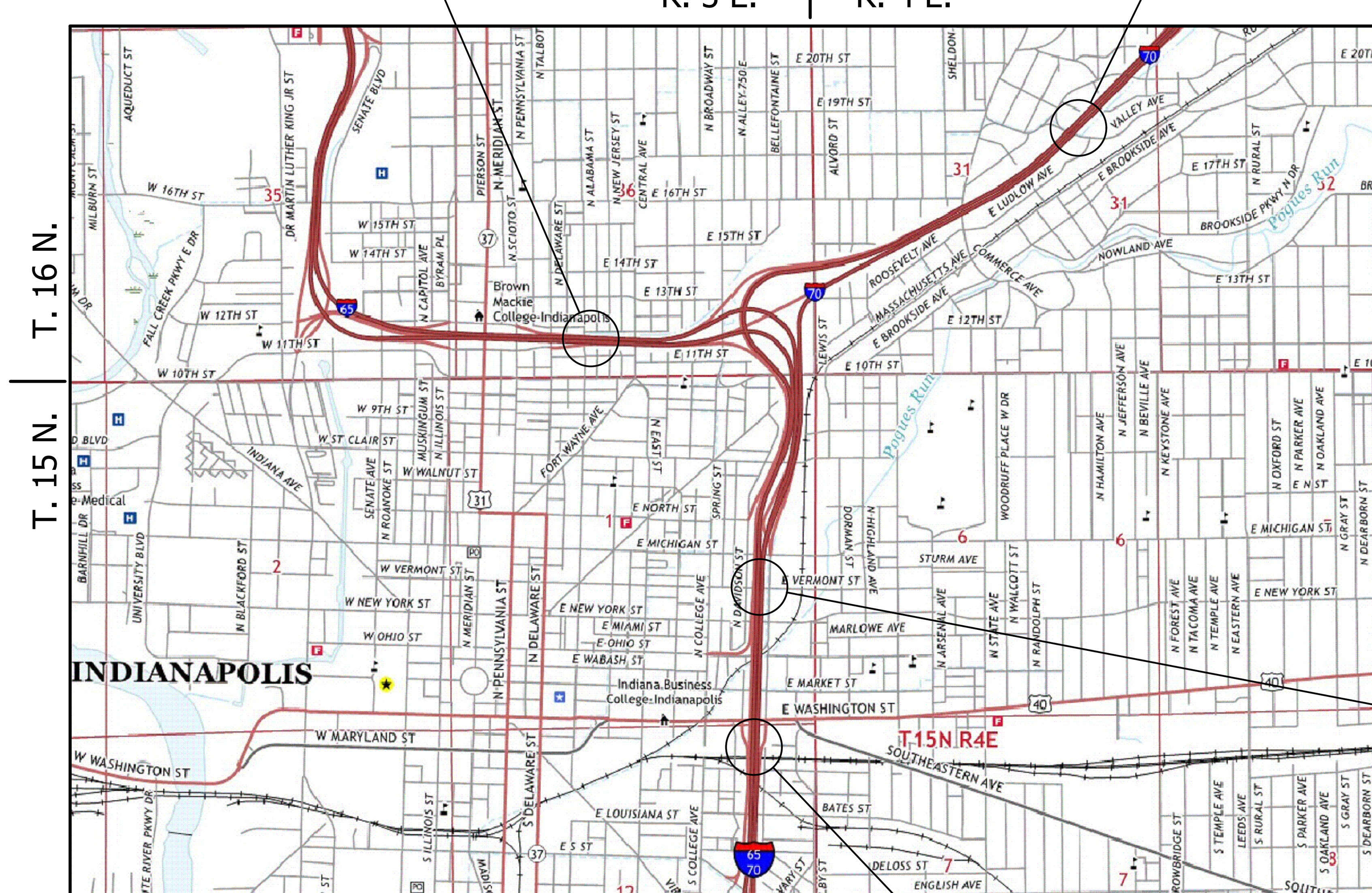

SCALE: 1" = 2000'

PROJECT LOCATION
BRIDGE FILE No. I65-111-10656 NB
I-65 / I-70 N.B OVER VERMONT STREET
STA. 137+19.63 LINE "P_ALG_I65-I70"

BEGIN PROJECT No. 1600808
STATION 113+00.00 LINE "P_ALG_I65/I70"

LOCATION MAP
MARION COUNTY

INDIANA DEPARTMENT OF TRANSPORTATION STANDARD SPECIFICATIONS DATED 2020 TO BE USED WITH THESE PLANS.

SUPERIOR CONSTRUCTION

PLANS PREPARED BY: Butler Fairman and Seufert Inc. (317)713-4615 PHONE

CERTIFIED BY: DATE

APPROVED FOR LETTING: INDIANA DEPARTMENT OF TRANSPORTATION DATE

BRIDGE FILE		
I65-111-10656 NB		
DESIGNATION		
1902179		
SURVEY BOOK	SHEET	
ELECTRONIC	1 OF	14
CONTRACT	PROJECT	
B-36910	1600808	

6412

\\bfsnt241\jobs5\641200.0000\ProjDevelopment\Design\Drawings\BRIDGES\05 OVER VERMONT STREET\Structure 1902179\1902179_S_BP_TTL01.dwg Dylan Piercefield Plot:2/24/2020 6:08 AM Save:2/21/2020 10:46 AM

UTILITIES

REVISIONS

SHEET NO.	DATE	REVISED

KIN PROJECT INFORMATION

DESIGNATION	PROJECT DESCRIPTION	
1600808	COMPLETE ROAD RECONSTRUCTION OF I-65/I-70 FROM WASHINGTON STREET TO I-65 OVER DELAWARE STREET AND I-70 OVER VALLEY AVENUE	LEAD DES
1901935	ITS FOR I-65/I-70 FROM WASHINGTON STREET TO I-65 OVER DELAWARE STREET AND I-70 OVER VALLEY AVENUE	
1901936	SIGNS, LIGHTING, SIGNALS AND MARKING FOR I-65/I-70 FROM WASHINGTON STREET TO I-65 OVER DELAWARE STREET AND I-70 OVER VALLEY AVENUE	
1901847	BRIDGE REPLACEMENT ON I-65/I-70 NB OVER WASHINGTON STREET	
1901848	BRIDGE REPLACEMENT ON I-65/I-70 SB OVER WASHINGTON STREET	
1901849	BRIDGE REPLACEMENT ON I-65/I-70 SB CD OVER WASHINGTON STREET	
1901850	BRIDGE REPLACEMENT ON I-65/I-70 NB OVER MARKET STREET	
1901851	BRIDGE REPLACEMENT ON I-65/I-70 SB OVER MARKET STREET	
1901852	BRIDGE REPLACEMENT ON I-65/I-70 SB CD OVER MARKET STREET	
1901853	BRIDGE REPLACEMENT ON I-65/I-70 NB OVER CSX RAILROAD & OHIO STREET	
1901854	BRIDGE REPLACEMENT ON I-65/I-70 SB OVER CSX RAILROAD & OHIO STREET	
1901855	BRIDGE REPLACEMENT ON I-65/I-70 SB CD OVER CSX RAILROAD & OHIO STREET	
1901856	BRIDGE REPLACEMENT ON I-65/I-70 NB OVER NEW YORK STREET	
1901857	BRIDGE REPLACEMENT ON I-65/I-70 SB OVER NEW YORK STREET	
1901858	BRIDGE REPLACEMENT ON I-65/I-70 SB CD OVER NEW YORK STREET	
1901861	BRIDGE REPLACEMENT ON I-65/I-70 SB CD OVER VERMONT STREET	
1901862	BRIDGE REPLACEMENT ON I-65 NB & I-70 EB OVER MICHIGAN STREET	
1901863	BRIDGE REPLACEMENT ON I-65 SB/I-70 WB OVER MICHIGAN STREET	
1901864	BRIDGE REPLACEMENT ON I-65/I-70 SB CD OVER MICHIGAN STREET	
1901865	BRIDGE REPLACEMENT ON I-65 NB OVER I-70 EB ENTRANCE RAMP	
1901881	BRIDGE REPLACEMENT ON I-65 NB OVER ST. CLAIR STREET	
1901889	NEW BRIDGE CONSTRUCTION ON I-70 EB OVER ST. CLAIR STREET	
1901892	BRIDGE REPLACEMENT ON I-65 SB/I-70 WB OVER ST. CLAIR STREET	
1901896	NEW BRIDGE CONSTRUCTION ON SB CD OVER ST. CLAIR STREET	
1901897	BRIDGE REPLACEMENT ON I-65 NB OVER EAST 10TH STREET	
1901899	NEW BRIDGE CONSTRUCTION ON I-70 EB OVER EAST 10TH STREET	
1901901	BRIDGE REPLACEMENT ON I-65 SB OVER EAST 10TH STREET	
1901903	BRIDGE REPLACEMENT ON I-70 WB OVER EAST 10TH STREET	
1901905	NEW BRIDGE CONSTRUCTION ON SB CD & RAMP OVER EAST 10TH STREET	
1901906	NEW BRIDGE CONSTRUCTION ON I-65 NB CD EXIT RAMP OVER CENTRAL AVENUE	
1901907	BRIDGE REPLACEMENT ON I-65 NB OVER CENTRAL AVENUE	
1901908	BRIDGE REPLACEMENT ON I-65 SB OVER CENTRAL AVENUE	
1901909	NEW BRIDGE CONSTRUCTION ON I-65 SB CD ENTRANCE RAMP OVER CENTRAL AVE.	
1901914	BRIDGE REPLACEMENT ON I-70 WB TO I-65 NB OVER COLLEGE AVENUE	
1901915	BRIDGE REPLACEMENT ON I-65 NB & PENNSYLVANIA EXIT RAMP OVER COLLEGE AVENUE	
1901917	BRIDGE REPLACEMENT ON I-65 SB & SB CD RAMP OVER COLLEGE AVENUE	
1901918	BRIDGE REPLACEMENT ON I-65 SB & DELAWARE ENTRANCE RAMP TO I-70 EB OVER COLLEGE AVENUE & FIVE RAMPS	
1901919	BRIDGE REPLACEMENT ON I-65 NB OVER I-70 WB & RAMP	
1901920	BRIDGE REPLACEMENT ON I-70 WB TO I-65 NB OVER THREE RAMPS	
1901921	BRIDGE REPLACEMENT ON I-65 SB OVER I-70 WB & SB CD RAMP	
1901922	NEW BRIDGE CONSTRUCTION ON I-70 EB OVER I-65 NB	
1901923	BRIDGE REPLACEMENT ON I-70 WB & SB CD OVER LEWIS STREET & MONON TRAIL	
1901925	NEW BRIDGE CONSTRUCTION ON I-70 WB TO I-65 NB OVER LEWIS STREET & MONON TRAIL	
1901927	NOT USED	
1901928	BRIDGE REPLACEMENT ON I-70 EB OVER LEWIS STREET & MONON TRAIL	
1901929	PREVENTATIVE MAINTENANCE ON I-70 WB OVER ROOSEVELT AT COMMERCE AVENUE	
1901930	PREVENTATIVE MAINTENANCE ON I-70 EB OVER ROOSEVELT AT COMMERCE AVENUE	
1901931	PREVENTATIVE MAINTENANCE ON I-70 WB OVER VALLEY AVENUE	
1901932	PREVENTATIVE MAINTENANCE ON I-70 EB OVER VALLEY AVENUE	
1901933	REHABILITATE AND WIDEN ON I-65 OVER 7 STREETS, ACCESS RD, MONORAIL (AKA "MONSTER BRIDGE") - PENNSYLVANIA EXIT RAMP	
1901934	REHABILITATE AND WIDEN ON I-65 OVER 7 STREETS, ACCESS RD, MONORAIL (AKA "MONSTER BRIDGE") - DELAWARE ENTRANCE RAMP	
1902179	BRIDGE REPLACEMENT ON I-65 NB/I70 EB OVER VERMONT STREET	
1902180	BRIDGE REPLACEMENT ON I-65 SB/I70 WB OVER VERMONT STREET	

INDEX

SHEET NO.	DESIGNATION
1	TITLE
2	INDEX
3	MAINTENANCE OF TRAFFIC
4	LAYOUT
5	GENERAL PLAN - PLAN & ELEVATION VIEWS
6	GENERAL PLAN - TYPICAL SECTION
7	BENTS NO. 1 AND NO. 2 DETAILS
8	BENTS NO. 1 AND NO. 2 DETAILS
9	FRAMING PLAN
10	BEAM DETAIL
11	FLOOR DETAILS
12	APPROACH SLAB
13	WALL LAYOUT
14	WALL LAYOUT

RECOMMENDED FOR APPROVAL: _____ DESIGN ENGINEER _____ DATE

DESIGNED: B. WRIGHT DRAWN: L. KIRSCH

CHECKED: M. EICHENAUER CHECKED: B. WRIGHT

INDIANA
DEPARTMENT OF TRANSPORTATION

INDEX

HORIZONTAL SCALE	BRIDGE FILE
N/A	I65-111-10656 NB
VERTICAL SCALE	DESIGNATION
V. SATHIRAJU	1902179
SURVEY BOOK	SHEET
ELECTRONIC	2 OF 14
CONTRACT	PROJECT
B-36910	1600808

6412

BFS NO.

\\bfsnt241\jobs5\641200.0000\ProjDevelopment\Design\Drawings\BRIDGES\05 OVER VERMONT STREET\Structure 1902179\1902179_S_BR_IND01.dwg Dylan Piercefield Plot:2/24/2020 8:00 AM Save:2/24/2020 8:00 AM

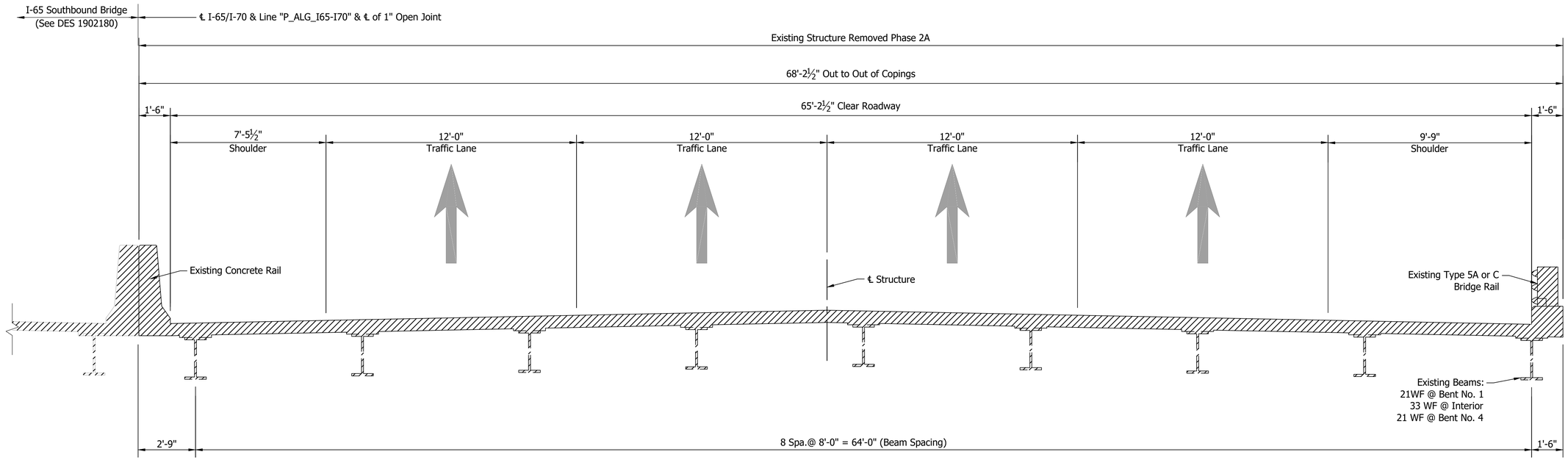

EXISTING NORTHBOUND TYPICAL SECTION

Scale: 3/8"=1'-0"

LEGEND

Limits of Removal

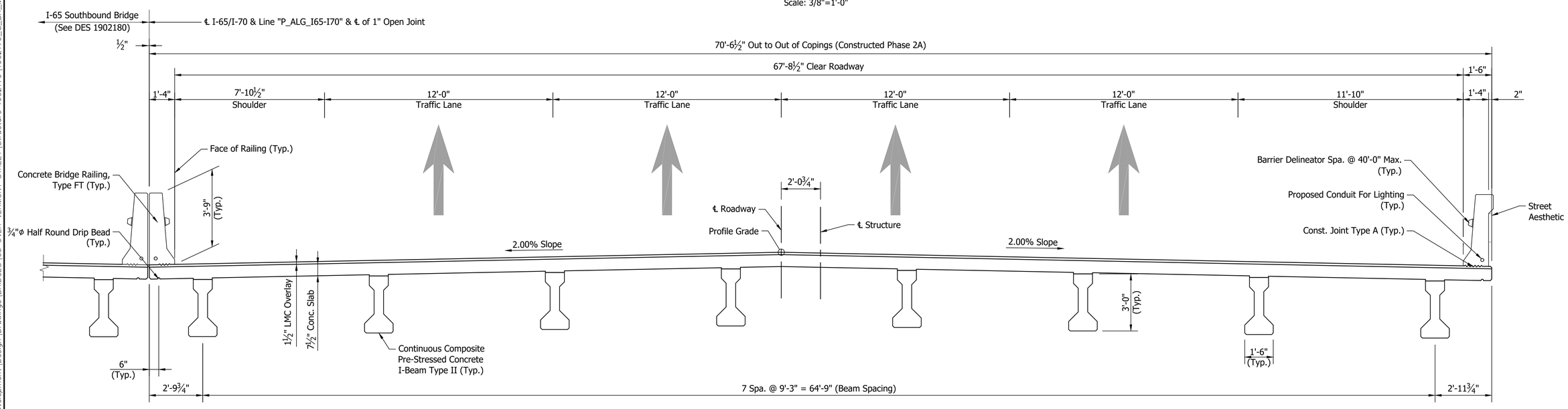

PROPOSED NORTHBOUND TYPICAL SECTION

Scale: 3/8"=1'-0"

RECOMMENDED FOR APPROVAL: _____ DESIGN ENGINEER _____ DATE

DESIGNED: V. SATHIRAJU DRAWN: D. PIERCEFIELD

CHECKED: B. WRIGHT CHECKED: B. WRIGHT

INDIANA
DEPARTMENT OF TRANSPORTATION

MAINTENANCE OF TRAFFIC

HORIZONTAL SCALE	BRIDGE FILE
As Noted	I65-111-10656 NB
VERTICAL SCALE	DESIGNATION
N/A	1902179
SURVEY BOOK	SHEET
ELECTRONIC	3 OF 14
CONTRACT	PROJECT
B-36910	1600808

6412

BFS NO.

\\bfsn1241\jobs5\641200.0000\Proj\Development\Design\Drawings\BRIDGES\05_OVER_VERMONT_STREET\Structure_1902179\1902179_S_BR_MOT01.dwg Dylan Piercefield Plot: 2/24/2020 6:09 AM Save: 2/6/2020 6:19 AM

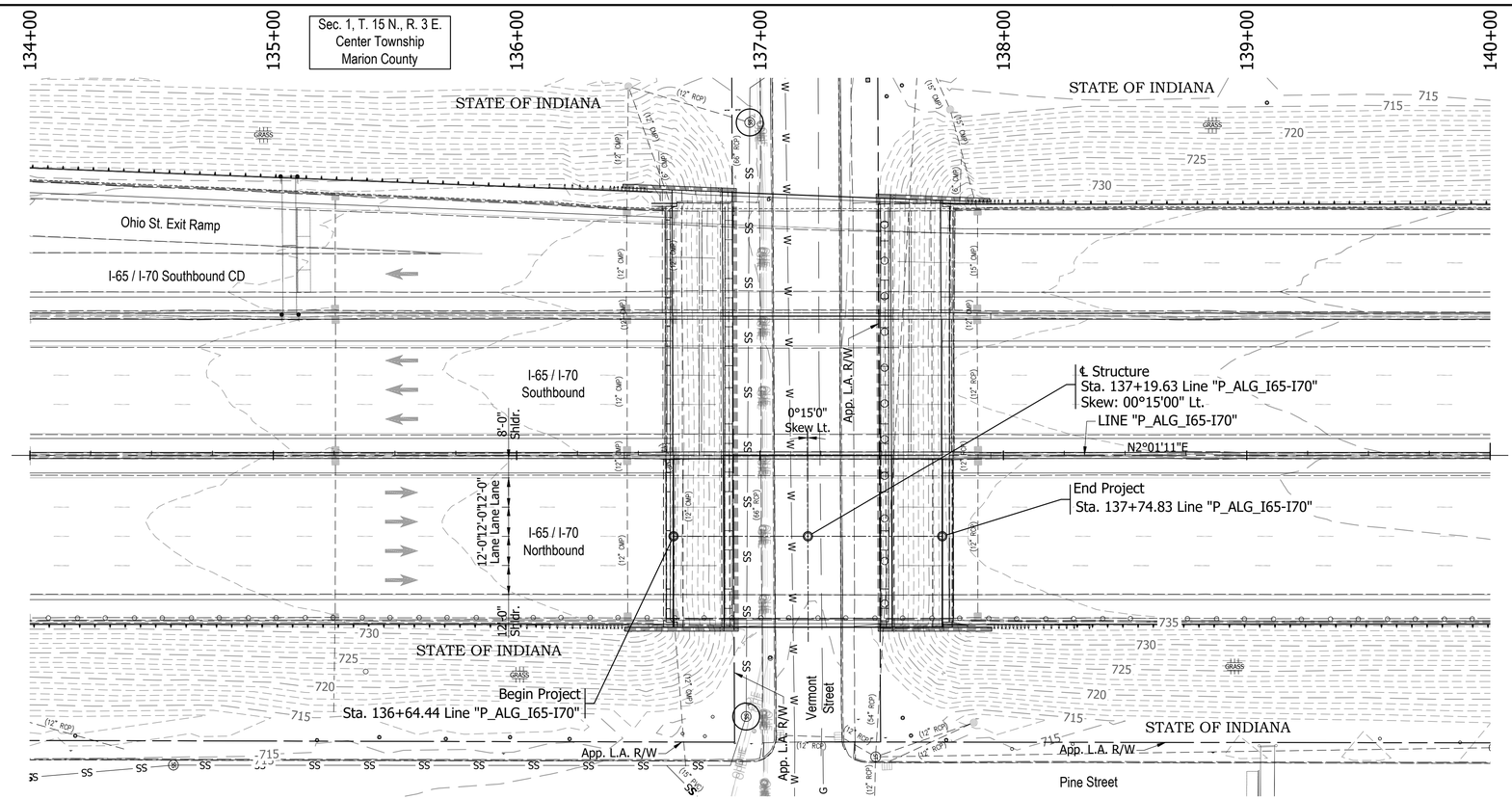

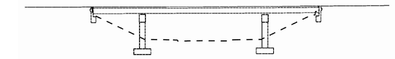

EXISTING STRUCTURE

The existing structure was built in 1974. Structure was rehabilitated in 2003 & 2013 and had emergency repairs in October 2013. The structure is a 3-span continuous composite 33" WF steel beam.

Span lengths: 1 @ 25'-0", 1 @ 64'-0", 1 @ 27'-6"

Clear roadway 65'-2½". Total length of 117'-8 5/8"

Existing structure to be removed.

Existing plans are on file with the Indiana Department of Transportation under Bridge File No. I-65-112-5731, I-65-112-5731A and I-65-112-5731B.

EARTHWORK TABULATION

See Roadway Plans (DES #_____) for earthwork tabulation.

NOTE: ALL TOPOGRAPHY INFORMATION REFERENCED TO LINE "P_ALG_I65-I70" UNLESS NOTED.

ALL R/W ON THIS SHEET DESCRIBED FROM LINE "P_ALG_I65-I70" UNLESS OTHERWISE NOTED

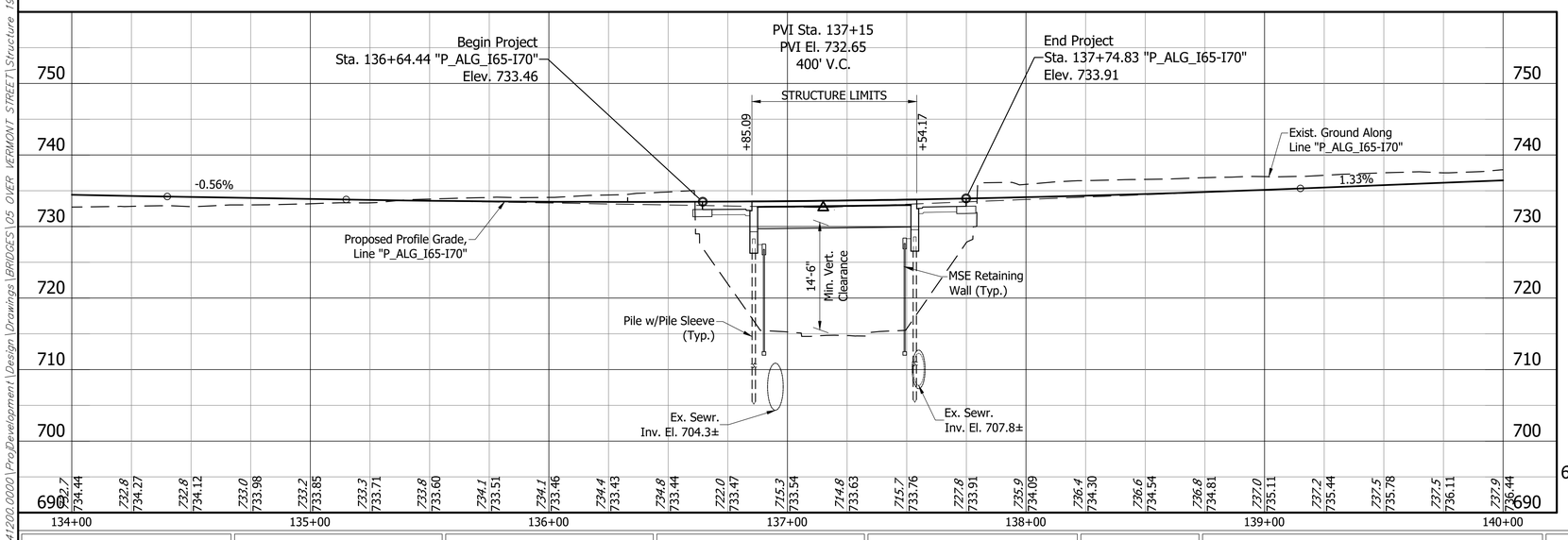

Notes:

1. For R/W and property information, see Location Control Route Survey (DES # _____).
2. For alignment data, see Geometric Layout Sheets (DES #_____).
3. See Road Plans (DES #_____) for Horizontal & Vertical Control Data.°

CONTINUOUS COMPOSITE PRE-STRESSED
CONCRETE I-BEAM TYPE II BRIDGE
1 SPAN: 67'-6"
67'-8 1/2" CLEAR ROADWAY; SKEW: 00°15'00" LT.
I-65 / I-70 N.B. OVER VERMONT STREET
MARION COUNTY

RECOMMENDED FOR APPROVAL: _____ DESIGN ENGINEER _____ DATE

DESIGNED: B. WRIGHT DRAWN: L. KIRSCH
CHECKED: M. EICHENAUER CHECKED: B. WRIGHT

INDIANA
DEPARTMENT OF TRANSPORTATION

LAYOUT

HORIZONTAL SCALE	BRIDGE FILE
1" = 30'	I65-111-10656 NB
VERTICAL SCALE	DESIGNATION
1" = 10'	1902179
SURVEY BOOK	SHEET
ELECTRONIC	4 OF 14
CONTRACT	PROJECT
B-36910	1600808

BFS NO. 6412

\\bfsn1241\jobs5\641200.0000\ProjDevelopment\Design\Drawings\BRIDGES\05 OVER VERMONT STREET\Structure 1902179\1902179_S_BR_LAY01.dwg Dylan Piercefield Plot:2/24/2020 6:09 AM Save:2/17/2020 3:19 PM

STRUCTURE TO BE BUILT ON A 400' VERTICAL CURVE

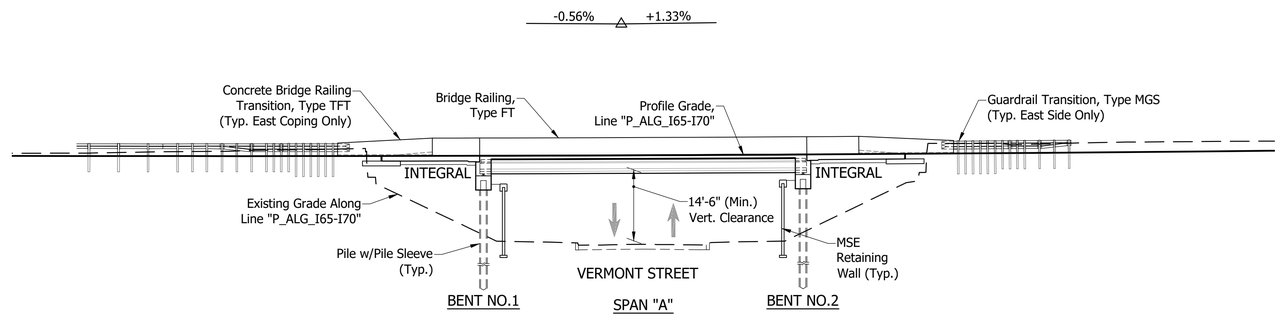

ELEVATION

Scale: 1/16" = 1'-0"

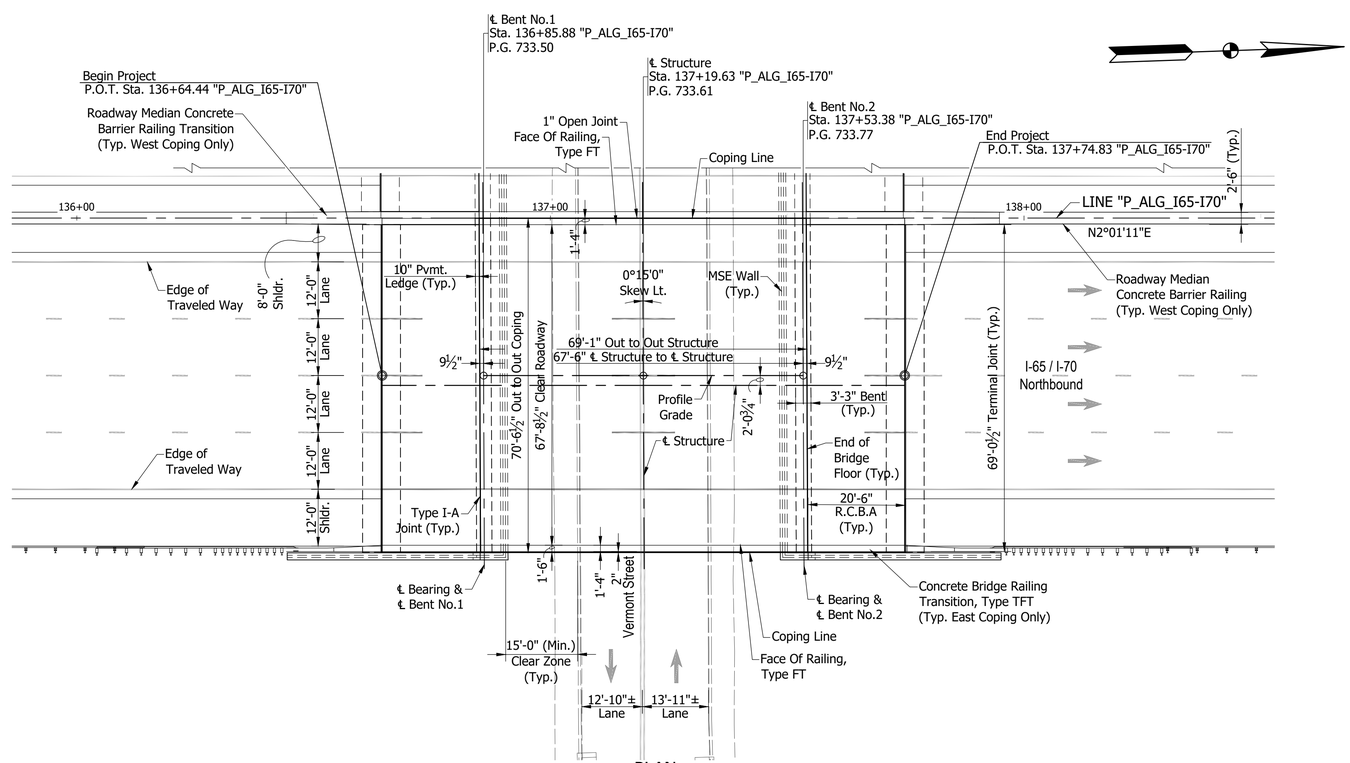

PLAN

Scale: 1/16" = 1'-0"

NOTE:
See Sheet 6 For Typical Section

CONTINUOUS COMPOSITE PRE-STRESSED
CONCRETE I-BEAM TYPE II BRIDGE
1 SPAN: 67'-6"
67'-8 1/2" CLEAR ROADWAY; SKEW: 00°15'00" LT.
I-65 / I-70 N.B. OVER VERMONT STREET
MARION COUNTY

RECOMMENDED FOR APPROVAL: _____ DESIGN ENGINEER _____ DATE

DESIGNED: V. SATHIRAJU DRAWN: L. KIRSCH
CHECKED: B. WRIGHT CHECKED: B. WRIGHT

INDIANA
DEPARTMENT OF TRANSPORTATION

GENERAL PLAN - PLAN & ELEVATION VIEWS

HORIZONTAL SCALE	BRIDGE FILE
As Noted	I65-111-10656 NB
VERTICAL SCALE	DESIGNATION
N/A	1902179
SURVEY BOOK	SHEET
ELECTRONIC	5 OF 14
CONTRACT	PROJECT
B-36910	1600808

BFS NO. 6412

\\bfsnt241\jobs5\641200.0000\ProDevelopment\Design\Drawings\BRIDGES\05 OVER VERMONT STREET\Structure 1902179\1902179_S-BR_PLN01.dwg Dylan Piercefield Plot:2/24/2020 6:10 AM Save:2/17/2020 3:19 PM

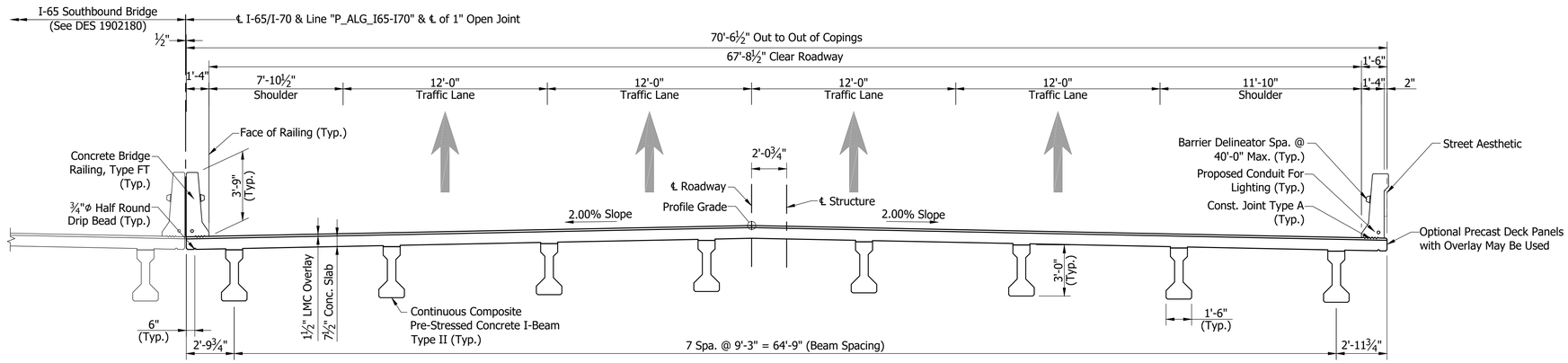

TYPICAL SECTION

Scale: 1/4"= 1'-0"

GENERAL NOTES

The existing structure shall be removed.

Reinforcing bars covering shall be 3 ½" in top and 1" min. in bottom of floor slabs and 3" in footings except bottom steel which shall be 4", and 2" in all other parts, unless noted.

Concrete in floor slab, and diaphragms, barriers, and end bents shall be an alternate Class C in accordance with the Technical Provisions.

Reinforcing Bars in Deck, Barrier, and End Bent Diaphragm Extending into the Deck shall be Stainless Steel. Reinforcing Bars in End Bent Diaphragm not Extending into the Deck and in the Cap shall be Epoxy Coated.

All exposed faces of the MSE walls and reinforced concrete bridge approach slabs shall receive surface seal.

See Bridge Aesthetic Plan for Architectural Details.

DESIGN DATA

LIVE LOAD:

Superstructure and Substructure Designed for HL-93 loading in accordance with the AASHTO LRFD Bridge Design Specifications, 8th Edition, 2017 and its subsequent revisions.

DEAD LOAD:

Designed for Actual Dead Load plus 35 psf of future wearing surface, and 15 psf for SIP Metal Deck Forms.

FLOOR SLAB:

Slab designed with a 7 ½" structural depth and a 1 ½" very early strength LMC wearing surface.

DESIGN STRESSES

CONSTRUCTION LOADING:

The exterior girder has been checked for strength, deflection, and overturning using the construction loads shown below. Cantilever overhang brackets were assumed for support of the deck overhang past the edge of the exterior beam. The finishing machine was assumed to be supported 6 in. outside the vertical coping form. The top overhang brackets were assumed to be located 6 in. past the edge of the vertical coping form. The bottom overhang brackets were assumed to be braced against the intersection of the girder bottom flange and web.

DECK FALSEWORK LOADS:

Designed for 15 psf for permanent metal stay-in-place deck forms, removable deck forms, and 2 ft. exterior walkway.

CONSTRUCTION LIVE LOAD:

Designed for 20 psf extending 2 ft. past the edge of coping and 75 lb/ft vertical force applied at a distance of 6 in. outside the face of coping over a 30 foot length of the deck centered with the finishing machine.

FINISHING-MACHINE LOAD:

4500 lb distributed over 10 ft. along the coping.

WIND LOAD:

Designed for 70 mph horizontal wind load in accordance with LRFD 3.8.1.

ULTIMATE DESIGN STRENGTHS:

Class "A" Concrete	f'c = 3,500 p.s.i.
Class "B" Concrete	f'c = 3,000 p.s.i.
Class "C" Concrete	f'c = 4,000 p.s.i.
Reinforcing Steel (Grade 60)	Fy = 60,000 p.s.i. (barrier)
	Fy = 75,000 p.s.i. (deck)
	Fy = 75,000 p.s.i. (all other locations)

SEISMIC DESIGN DATA:

Seismic Site Class	C
PGA (g)	0.051
S_s (g)	0.12
S_1 (g)	0.051
S_{D1} (g)	0.086
Seismic Design Category	A

CONTINUOUS COMPOSITE PRE-STRESSED
CONCRETE I-BEAM TYPE II BRIDGE
1 SPAN: 67'-6"
CLEAR ROADWAY: 67'-8 1/2"
SKEW: 00°15'00" LT.
I-65 / I-70 N.B. OVER VERMONT STREET
MARION COUNTY

RECOMMENDED
FOR APPROVAL: _____ DESIGN ENGINEER _____ DATE

DESIGNED: V. SATHIRAJU DRAWN: L. KIRSCH
CHECKED: B. WRIGHT CHECKED: B. WRIGHT

INDIANA
DEPARTMENT OF TRANSPORTATION

GENERAL PLAN - TYPICAL SECTION

HORIZONTAL SCALE	BRIDGE FILE
As Noted	I65-111-10656 NB
VERTICAL SCALE	DESIGNATION
N/A	1902179
SURVEY BOOK	SHEET
ELECTRONIC	6 OF 14
CONTRACT	PROJECT
B-36910	1600808

BFS NO. 6412

\\bfsn1241\Jobs5\641200.0000\ProjDevelopment\Design\Drawings\BRIDGES\05 OVER VERMONT STREET\Structure 1902179\1902179_S_BR_PLN02.dwg Dylan Piercefield Plot: 2/24/2020 6:10 AM Save: 2/20/2020 9:37 AM

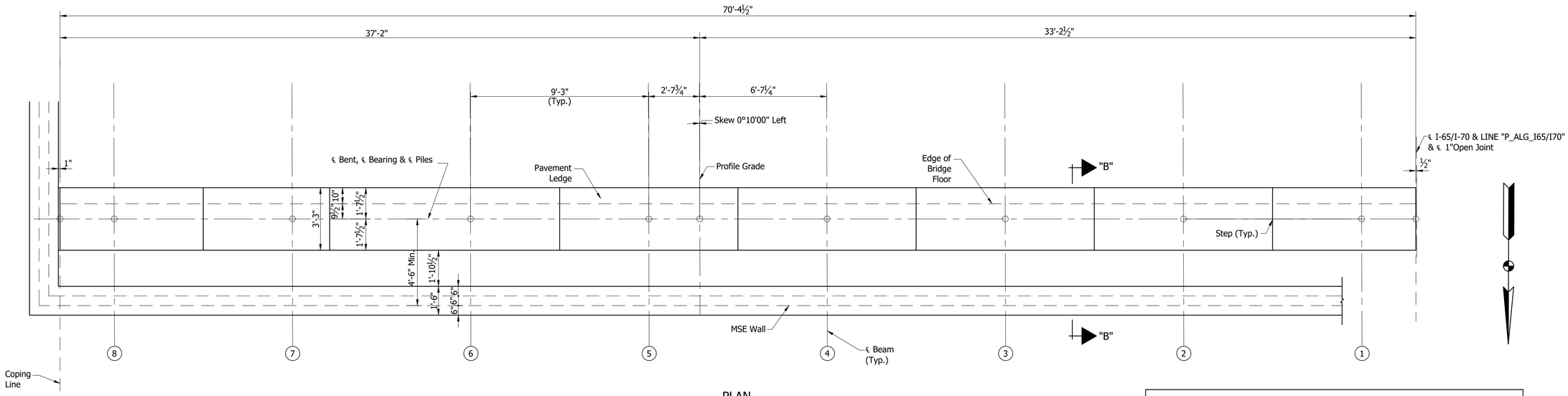

PLAN
BENT NO.1 NB (SHOWN)
BENT NO.2 NB (SIMILAR)
Scale: ⅜"=1'-0"

SEAT ELEVATIONS								
Beam No.	8	7	6	5	4	3	2	1
Bent No.1	727.86	728.05	728.23	728.42	728.50	728.31	728.13	727.94
Bent No.2	727.76	727.95	728.13	728.32	728.40	728.21	728.03	727.84

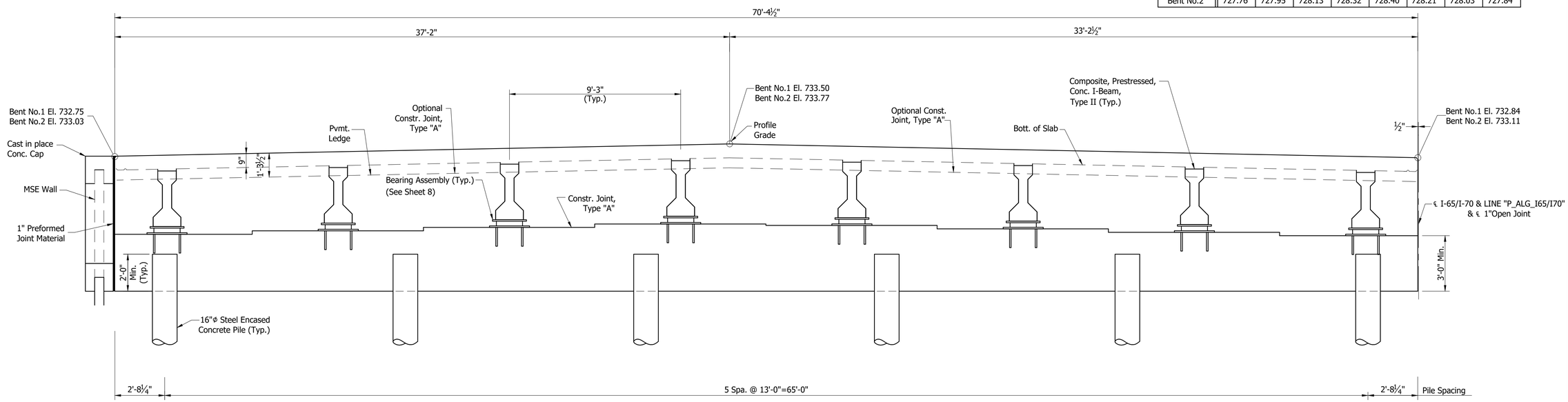

SECTION ALONG ℄ BENT
Scale: ⅜"=1'-0"

RECOMMENDED FOR APPROVAL: _____ DESIGN ENGINEER _____ DATE	INDIANA DEPARTMENT OF TRANSPORTATION	HORIZONTAL SCALE: N/A	BRIDGE FILE: I65-111-10656 NB
		VERTICAL SCALE: N/A	DESIGNATION: 1902179
DESIGNED: V. SATHIRAJU DRAWN: K. COFFMAN	BENTS NO. 1 AND NO. 2 DETAILS	SURVEY BOOK: ELECTRONIC	SHEET: 7 OF 14
CHECKED: B. WRIGHT CHECKED: B. WRIGHT		CONTRACT: B-36910	PROJECT: 1600808

BFS NO. 6412

\\bfsn1241\jobs5\641200.0000\ProjDevelopment\Design\Drawings\BRIDGES\05 OVER VERMONT STREET\Structure 1902179\1902179_S_BR_BNT01 - BENT DETAIL.dwg Dylan Piercefield Plot:2/24/2020 1:22 PM Save:2/24/2020 1:22 PM

⊛ As an alternate a ⅞"Φx1'-3"Long Headed Automatic Welded Stud may be used.

⊗ Setting Tolerance of Bottom Plate-Level with to not more than 1/16" below top of Concrete.

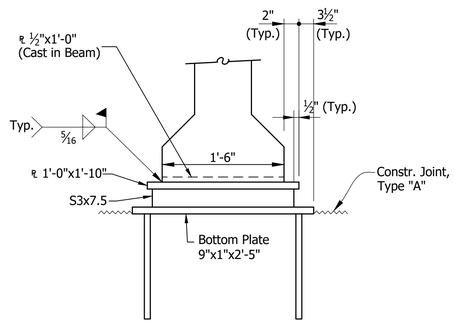

ELEVATION

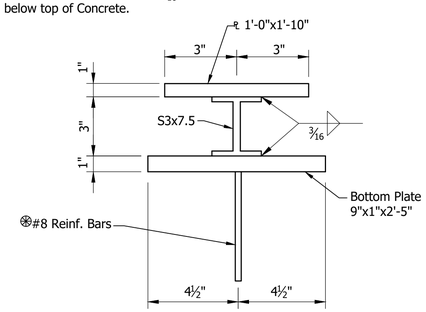

SECTION

BEARING ASSEMBLY

Not to Scale

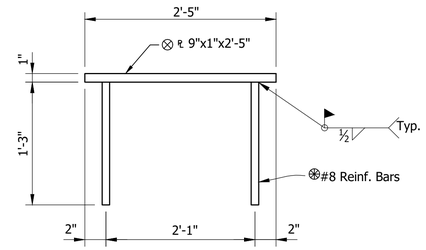

BOTTOM PLATE DETAIL

Not to Scale

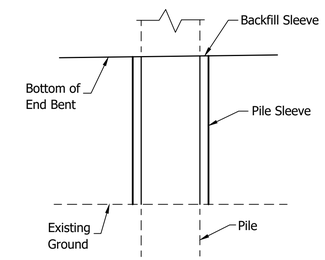

PILE SLEEVE DETAIL

Not to Scale

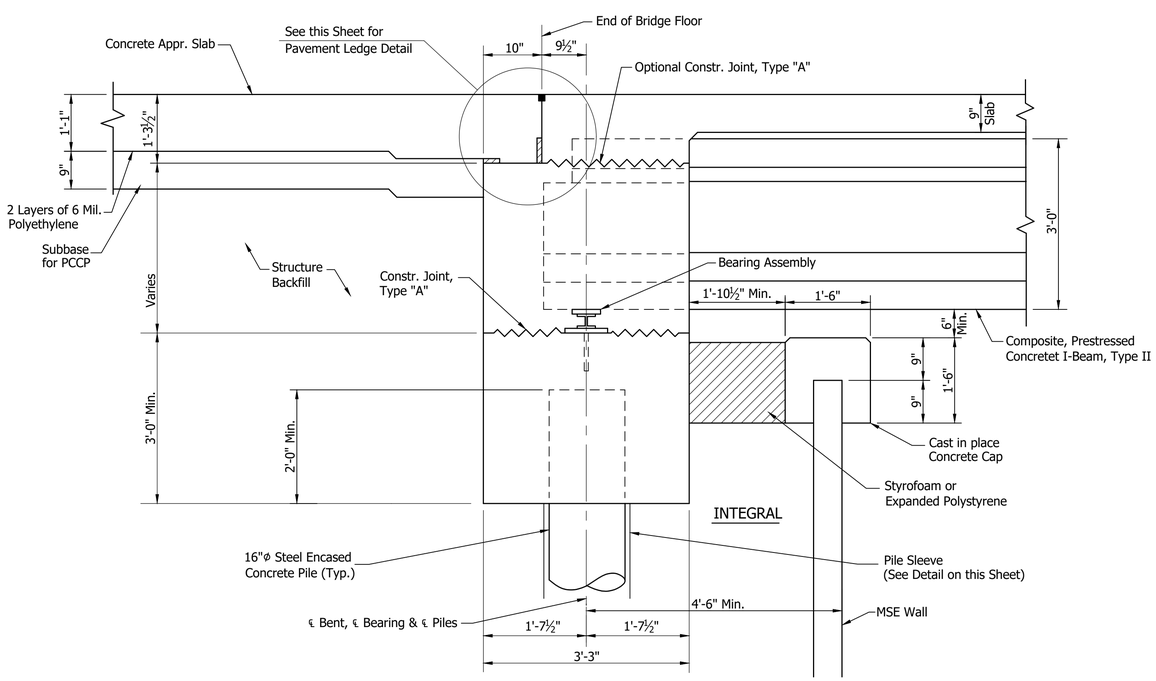

SECTION "B-B"

Not to Scale

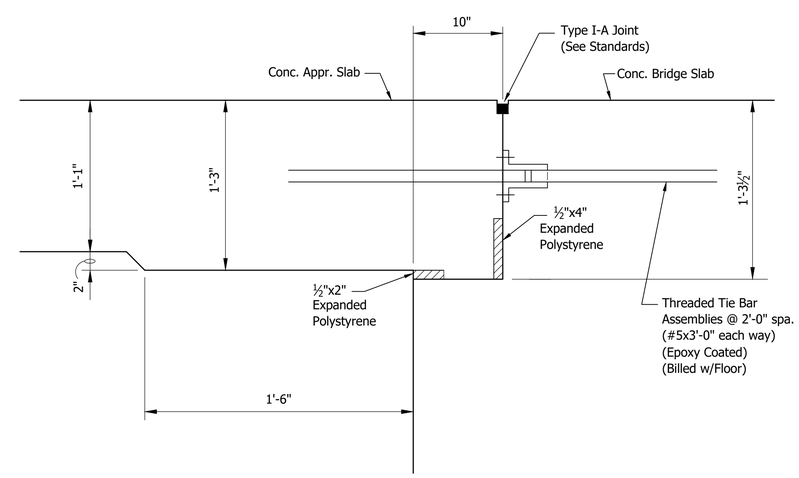

PAVEMENT LEDGE DETAIL

Not to Scale

RECOMMENDED FOR APPROVAL: DESIGN ENGINEER DATE	INDIANA DEPARTMENT OF TRANSPORTATION	HORIZONTAL SCALE: As Noted	BRIDGE FILE: I65-111-10656 NB	
		VERTICAL SCALE: N/A	DESIGNATION: 1902179	
DESIGNED: V. SATHIRAJU DRAWN: D. SHEETZ	BENTS NO. 1 AND NO. 2 DETAILS	SURVEY BOOK	SHEET	
CHECKED: B. WRIGHT CHECKED: B. WRIGHT		ELECTRONIC	8 OF 14	
		CONTRACT: B-36910	PROJECT: 1600808	

6412

BFS NO.

\\bsn1241\jobs5\641200.0000\Proj.Development\Design\Drawings\BRIDGES\05 OVER VERMONT STREET\Structure 1902179\902179_S_BR_BNT02 - BENT DETAIL.dwg Dylan Piercefield Plot:2/24/2020 6:10 AM Save:1/22/2020 9:51 AM

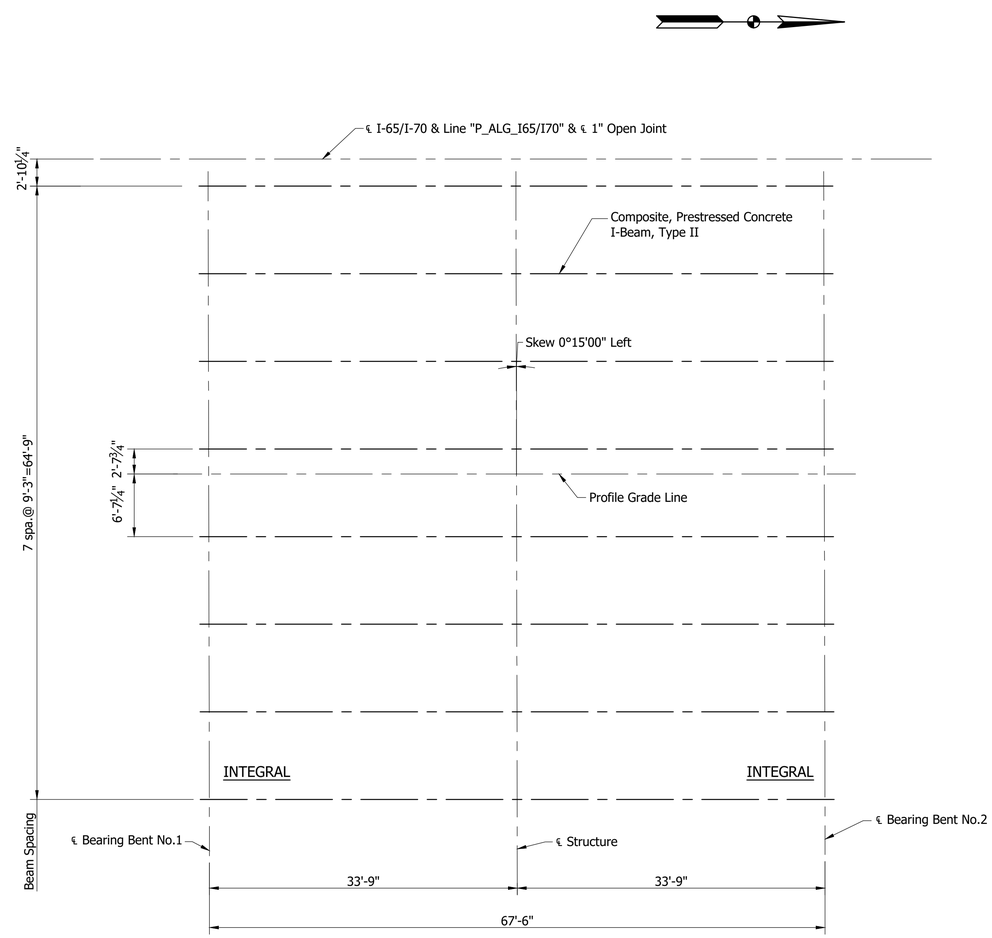

BEAM ERECTION PLAN

Scale: 1/8" = 1'-0"

RECOMMENDED FOR APPROVAL: _____ DESIGN ENGINEER _____ DATE	INDIANA DEPARTMENT OF TRANSPORTATION	HORIZONTAL SCALE: As Noted	BRIDGE FILE: I65-111-10656 NB	
		VERTICAL SCALE: N/A	DESIGNATION: 1902179	
DESIGNED: V. SATHIRAJU DRAWN: K. COFFMAN	FRAMING PLAN	SURVEY BOOK: ELECTRONIC	SHEET: 9 OF 14	
CHECKED: B. WRIGHT CHECKED: B. WRIGHT		CONTRACT: B-36910	PROJECT: 1600808	

BFS NO. 6412

\\bfsn1241\jobs5\641200.0000\ProjDevelopment\Design\Drawings\BRIDGES\05 OVER VERMONT STREET\Structure 1902179\1902179_S_BR_FRM01 - FRAMING PLAN.dwg Dylon Piercefield Plot:2/24/2020 6:10 AM Save:12/23/2019 9:42 AM

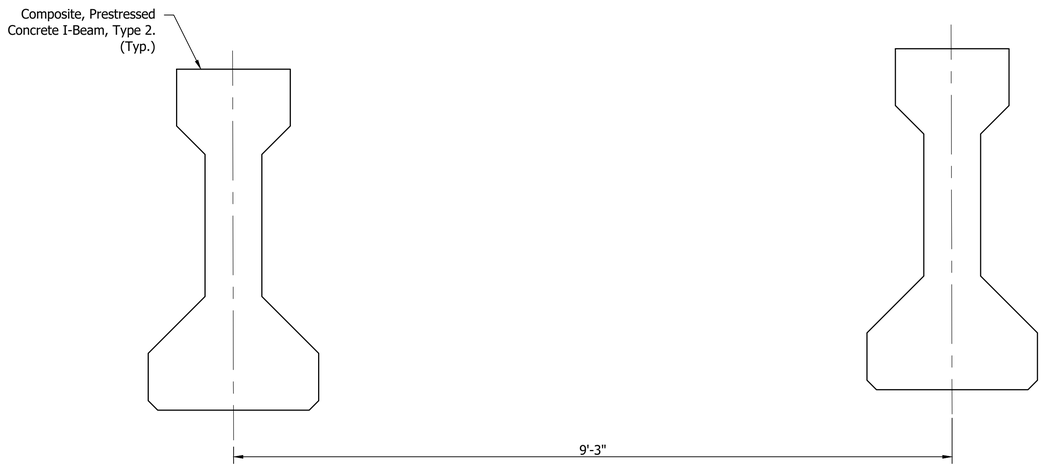

ELEVATION
Scale: 1-1/2" = 1'-0"

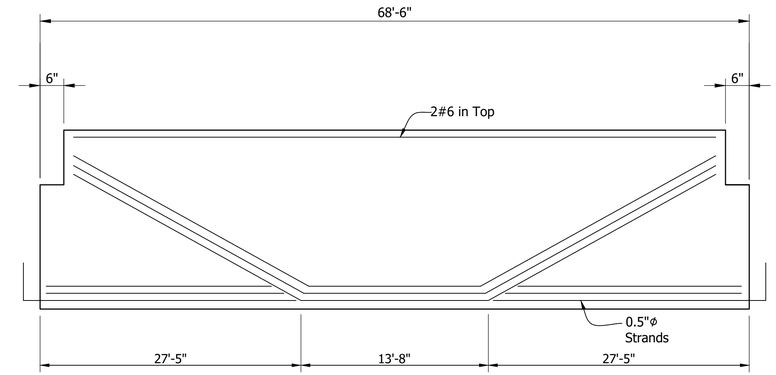

BEAM ELEVATION
SPAN "A" (SHOWN)
SHOWING DRAPED STRANDS
Not to Scale

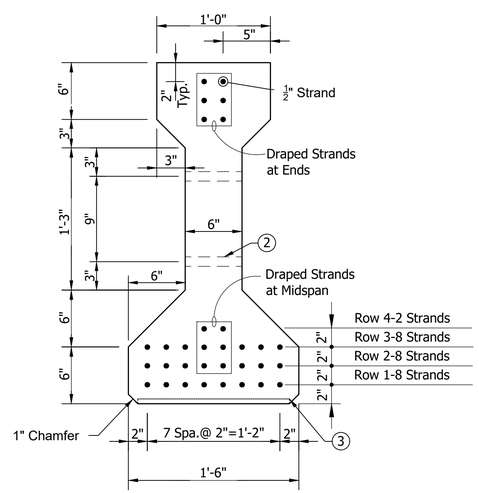

SECTION SHOWING STRANDS (SPAN A)

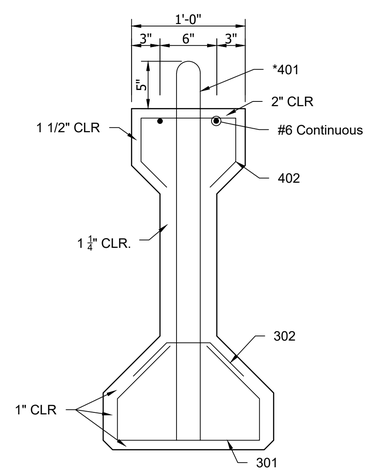

SECTION SHOWING REINFORCING

✳ Denotes Epoxy Coated

Note:
Bars 1" Clear
unless noted.

1. Surface Seal req'd on top of all Beams and Exterior Face of Exterior Beams
2. 1" Ø Holes or 3/4"Ø Inserts for Dowels at Bent or Pier. (See Beam Plans)
3. ₹ 1/2"x12"x1'-4" at End Bent Ends only

BEAM SECTIONS
Scale: 1-1/2" = 1'-0"

RECOMMENDED FOR APPROVAL: DESIGN ENGINEER DATE	INDIANA DEPARTMENT OF TRANSPORTATION	HORIZONTAL SCALE: As Noted	BRIDGE FILE: I65-111-10656 NB	
		VERTICAL SCALE: N/A	DESIGNATION: 1902179	
DESIGNED: V. SATHIRAJU DRAWN: K. COFFMAN	BEAM DETAIL	SURVEY BOOK	SHEET	
CHECKED: B. WRIGHT CHECKED: B. WRIGHT		ELECTRONIC	10 OF 14	
		CONTRACT: B-36910	PROJECT: 1600808	

BFS NO. 6412

\\bfsn1241\jobs5\641200.0000\Proj\Development\Design\Drawings\BRIDGES\05 OVER VERMONT STREET\Structure 1902179\1902179_S_BR_BMD01 - BEAM DETAIL.dwg Dylan Piercefield Plot:2/24/2020 6:10 AM Save:12/16/2019 8:59 AM

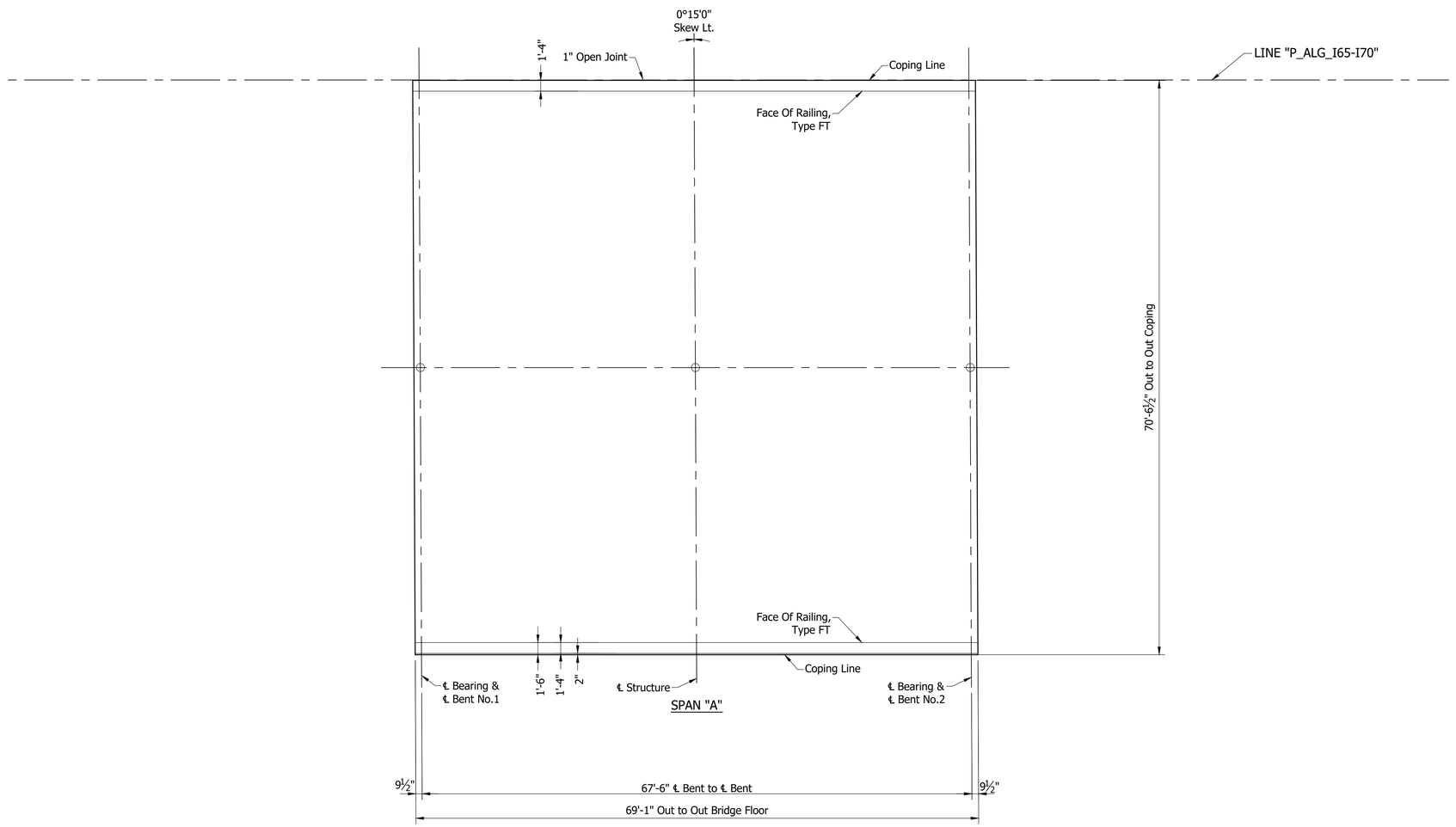

FLOOR PLAN

Scale: 1/8" = 1'-0"

NOTE:
See Sheet ___ For _____

	RECOMMENDED FOR APPROVAL: _____ DESIGN ENGINEER _____ DATE	INDIANA DEPARTMENT OF TRANSPORTATION	HORIZONTAL SCALE: As Noted	BRIDGE FILE: I65-111-10656 NB
			VERTICAL SCALE: N/A	DESIGNATION: 1902179
	DESIGNED: V. SATHIRAJU DRAWN: L. KIRSCH	FLOOR DETAILS	SURVEY BOOK: ELECTRONIC	SHEET: 11 OF 14
	CHECKED: B. WRIGHT CHECKED: B. WRIGHT		CONTRACT: B-36910	PROJECT: 1600808

6412

BPS NO.

\\bfsnt241\Jobs5\641200.0000\ProjDevelopment\Design\Drawings\BRIDGES\05 OVER VERMONT STREET\Structure 1902179\902179_S_BR_FLR01.dwg Dylan Piercefield Plot: 2/24/2020 6:10 AM Save: 1/31/2020 7:07 AM

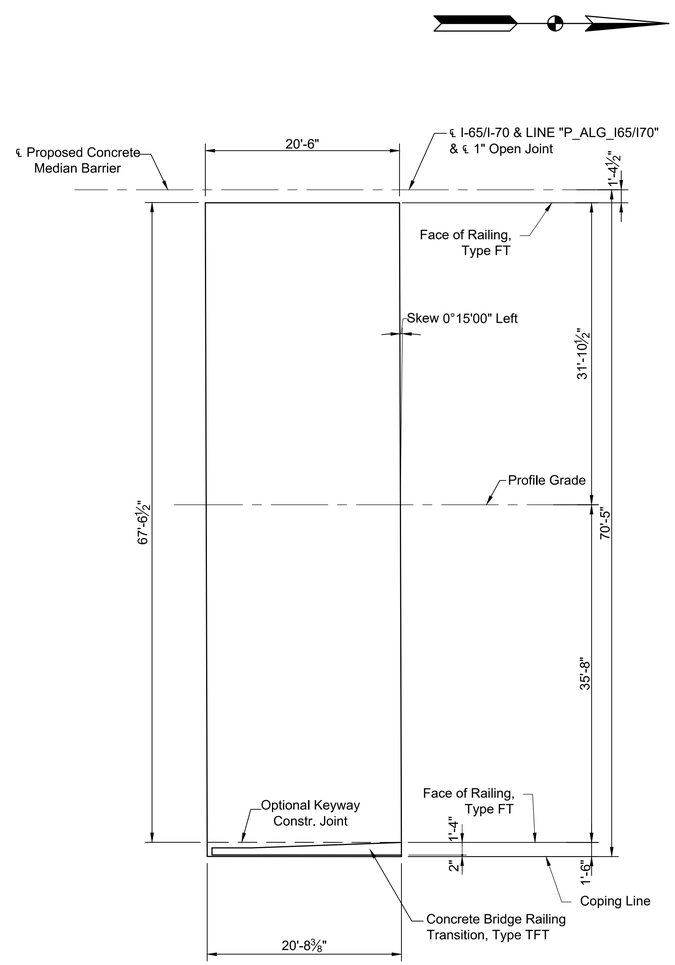

PLAN
SOUTH SLAB (SHOWN)
NORTH SLAB (OPP. HAND)
Scale: ⅛"=1'-0"

RECOMMENDED FOR APPROVAL: DESIGN ENGINEER DATE	INDIANA DEPARTMENT OF TRANSPORTATION	HORIZONTAL SCALE: As Noted	BRIDGE FILE: I65-111-10656 NB	
		VERTICAL SCALE: N/A	DESIGNATION: 1902179	
DESIGNED: D. SHEETZ DRAWN: D. SHEETZ	APPROACH SLAB	SURVEY BOOK: ELECTRONIC	SHEET: 12 OF 14	
CHECKED: B. WRIGHT CHECKED: B. WRIGHT		CONTRACT: B-36910	PROJECT: 1600808	

BFS NO. 6412

\\bfsn1241\jobs5\641200.0000\ProjDevelopment\Design\Drawings\BRIDGES\05 OVER VERMONT STREET\Structure 1902179\1902179_S_BR_AP501 - APPROACH SLAB.dwg Dylon Piercefield Plot:2/24/2020 6:10 AM Save:2/17/2020 3:19 PM

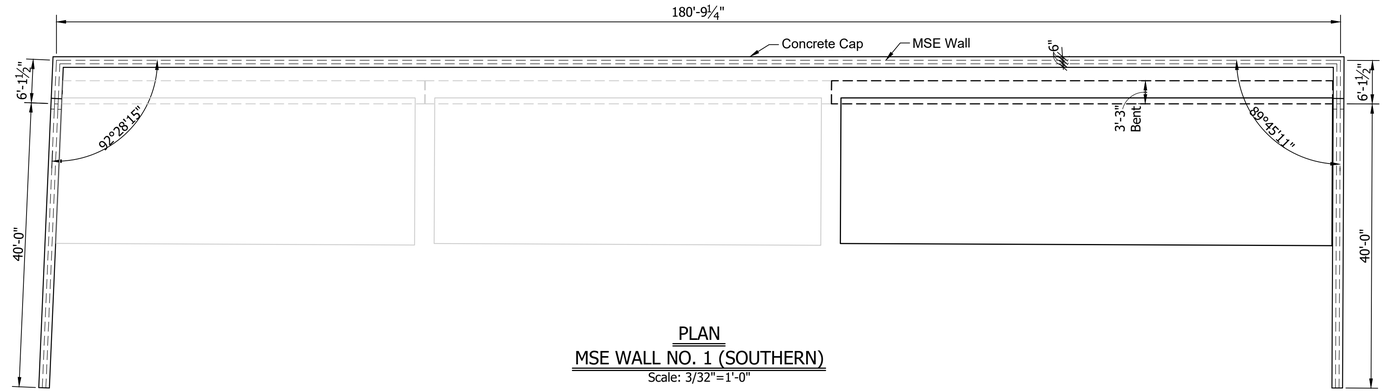

PLAN
MSE WALL NO. 1 (SOUTHERN)
Scale: 3/32"=1'-0"

NOTE:
Elevation Looking At Back Face of Wall

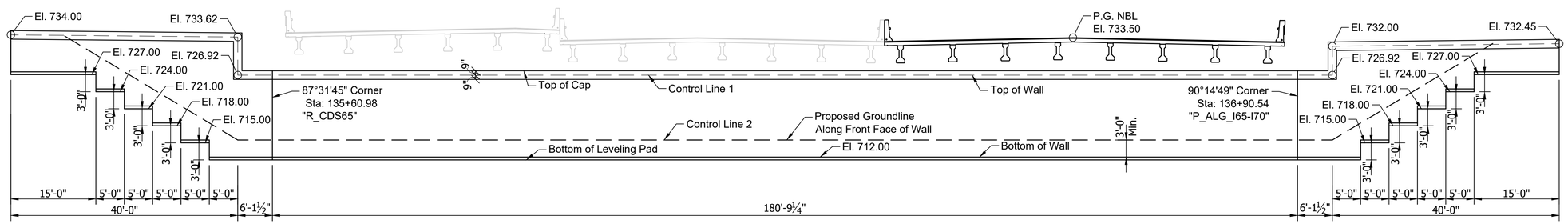

ELEVATION
MSE WALL NO. 1 (SOUTHERN)
Scale: 3/32"=1'-0"

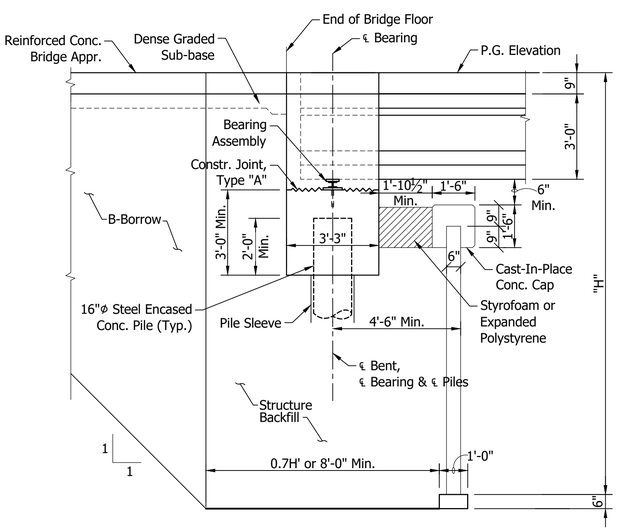

SECTION
MSE WALL NO. 1
Scale: 3/8"=1'-0"

RECOMMENDED FOR APPROVAL: DESIGN ENGINEER DATE	INDIANA DEPARTMENT OF TRANSPORTATION	HORIZONTAL SCALE: As Noted	VERTICAL SCALE: N/A	BRIDGE FILE: I65-111-10656 NB
		DESIGNATION: 1902179		
DESIGNED: B. WRIGHT DRAWN: D. PIERCEFIELD	WALL LAYOUT	SURVEY BOOK: ELECTRONIC	SHEET: 13 OF 14	
CHECKED: M. EICHENAUER CHECKED: B. WRIGHT		CONTRACT: B-36910	PROJECT: 1600808	

BFS NO. 6412

\\bfsn1241\jobs5\641200.0000\Proj\Development\Design\Drawings\BRIDGES\05 OVER VERMONT STREET\Structure 1902179\1902179_S_BR_WL01 - WALL LAYOUT.dwg Dylan Piercefield Plot:2/24/2020 6:11 AM Save:2/18/2020 7:11 AM

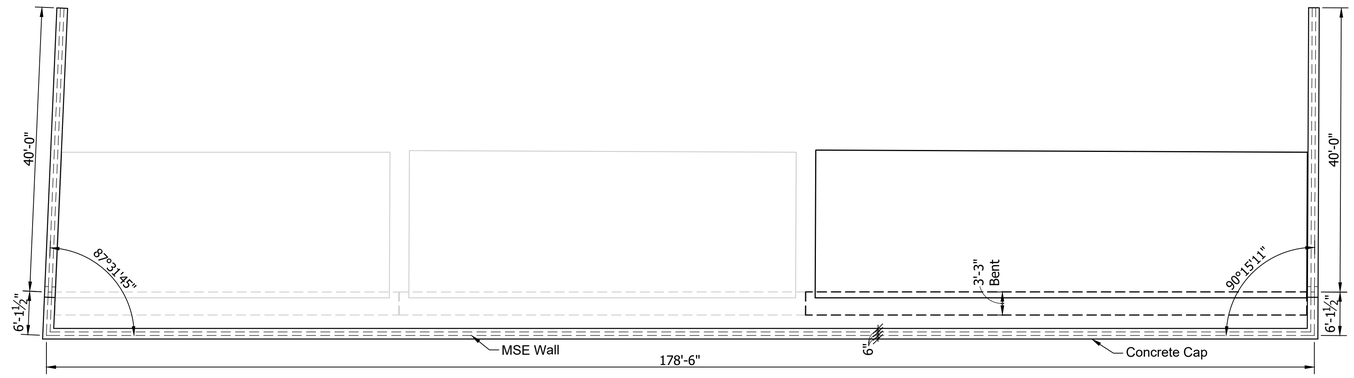

PLAN
MSE WALL NO. 2 (NORTHERN)
Scale: 3/32"=1'-0"

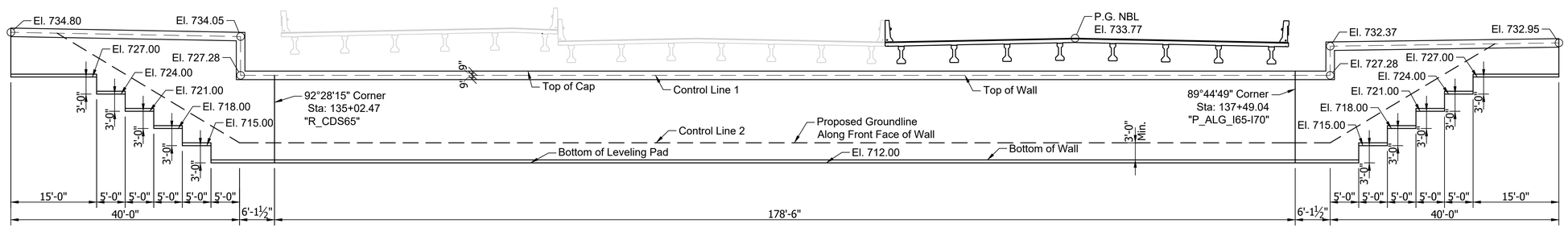

ELEVATION
MSE WALL NO. 2 (NORTHERN)
Scale: 3/32"=1'-0"

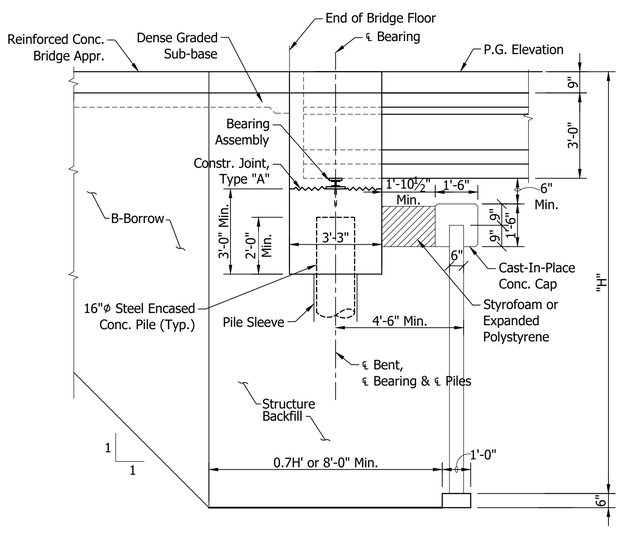

SECTION
MSE WALL NO. 2
Scale: 3/8"=1'-0"

	RECOMMENDED FOR APPROVAL: DESIGN ENGINEER DATE	INDIANA DEPARTMENT OF TRANSPORTATION	HORIZONTAL SCALE: As Noted	BRIDGE FILE: I65-111-10656 NB
			VERTICAL SCALE: N/A	DESIGNATION: 1902179
	DESIGNED: B. WRIGHT DRAWN: D. PIERCEFIELD	WALL LAYOUT	SURVEY BOOK: ELECTRONIC	SHEET: 14 OF 14
	CHECKED: M. EICHENAUER CHECKED: B. WRIGHT		CONTRACT: B-36910	PROJECT: 1600808

6412

BFS NO.

\\bfsn1241\Jobs5\641200.0000\ProjDevelopment\Design\Drawings\BRIDGES\05 OVER VERMONT STREET\Structure 1902179\1902179_S_BR_WL02 - WALL LAYOUT.dwg Dylan Piercefield Plot:2/24/2020 6:11 AM Save:2/18/2020 8:53 AM

PROJECT	DESIGNATION
1600808	1902180
CONTRACT	BRIDGE FILE
B-36910	I65-111-10657 SB

STRUCTURE INFORMATION

STRUCTURE	TYPE	SPAN & SKEW	OVER	STATION
I65-111-10657 SB	CONTINUOUS COMPOSITE PRE-STRESSED CONCRETE I-BEAM TYPE II BRIDGE	1 SPAN: 67'-6" SKEW: 00°15'00" LT.	VERMONT STREET	137+19.34 LINE "P_ALG_I65-I70"

INDIANA DEPARTMENT OF TRANSPORTATION

BRIDGE PLANS

FOR SPANS OVER 20 FEET

ROUTE: I-65 / I-70 S.B. AT: RP 111+59

PROJECT NO. 1600808 P.E.

1600808 CONST.

NO ADDITIONAL RIGHT OF WAY REQUIRED FOR THIS PROJECT

BRIDGE REPLACEMENT ON I-65 / I-70 S.B OVER VERMONT STREET
LOCATED 1.33 MILES NORTH OF I-70 (SOUTH SPLIT) INTERCHANGE
SECTION 1, TOWNSHIP 15 NORTH, RANGE 3 EAST
CENTER TOWNSHIP, MARION COUNTY INDIANA

TRAFFIC DATA	I-65 / I-70 N.B.	I-65 / I-70 S.B.	I-65 / I-70 S.B. CD	VERMONT STREET
A.D.T. (2021)	62,989 V.P.D.	58,288 V.P.D.	18,922 V.P.D.	1519 V.P.D.
A.D.T. (2041)	76,198 V.P.D.	64,063 V.P.D.	18,473 V.P.D.	545 V.P.D.
D.H.V. (2041)	6,553 V.P.H.	5,125 V.P.H.	2,511 V.P.H.	66 V.P.H.
DIRECTIONAL DISTRIBUTION	100 %	100 %	100 %	61 %
TRUCKS	9 % D.H.V.	10 % D.H.V.	5 % D.H.V.	9 % D.H.V.
DESIGN DATA				
DESIGN SPEED	55 M.P.H.	55 M.P.H.	55 M.P.H.	30 M.P.H.
PROJECT DESIGN CRITERIA	COMPLETE RECONSTRUCTION (FREEWAY)			N/A
FUNCTIONAL CLASSIFICATION	URBAN FREEWAY			LOCAL ROAD
RURAL/URBAN	URBAN (BUILT-UP)			URBAN (BUILT-UP)
TERRAIN	LEVEL			LEVEL
ACCESS CONTROL	FULL			FULL

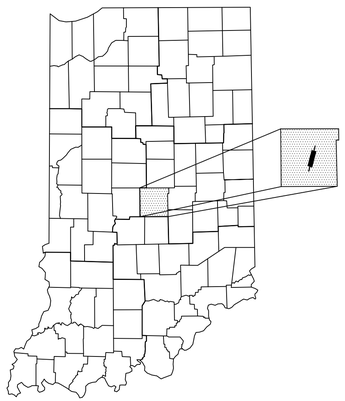

PROJECT LOCATION SHOWN BY

LATITUDE: 39°46'21" N LONGITUDE: 86°08'34" W

BRIDGE LENGTH :	0.013 MI.
ROADWAY LENGTH :	SEE ROAD PLANS
TOTAL LENGTH :	SEE ROAD PLANS
MAX GRADE :	1.33%

HUC: 05120201130020

END PROJECT No. 1600808
STATION 25+75.00 LINE "P_ALG_I65"

END PROJECT No. 1600808
STATION 41+85.70 LINE "P_ALG_I70"

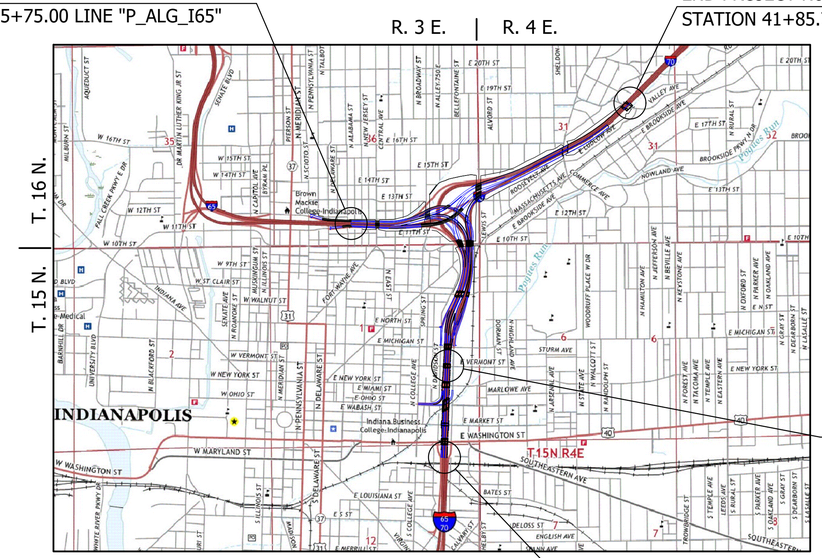

LOCATION MAP
MARION COUNTY

PROJECT LOCATION
BRIDGE FILE No. I65-111-10657 SB
I-65 / I-70 S.B OVER VERMONT STREET
STA. 137+19.34 LINE "P_ALG_I65-I70"

BEGIN PROJECT No. 1600808
STATION 113+00.00 LINE "P_ALG_I65/I70"

SCALE: 1" = 2000'

INDIANA DEPARTMENT OF TRANSPORTATION
STANDARD SPECIFICATIONS DATED 2020 TO
BE USED WITH THESE PLANS.

SUPERIOR CONSTRUCTION

PLANS PREPARED BY: Butler Fairman and Seufert Inc. (317)713-4615
PHONE

CERTIFIED BY: #/#/#
DATE

APPROVED FOR LETTING: #/#/#
INDIANA DEPARTMENT OF TRANSPORTATION DATE

BRIDGE FILE		
I65-111-10657 SB		
DESIGNATION		
1902180		
SURVEY BOOK	SHEET	
ELECTRONIC	1 OF 14	
CONTRACT	PROJECT	
B-36910	1600808	

6412

\\bfsn1241\jobs5\641200.0000\Proj\Development\Design\Drawings\BRIDGES\05_OVER_VERMONT_STREET\Structure_1902180\1902180_S_BR_TTL01.dwg Dylon Piercefield Plot:2/24/2020 6:12 AM Save:2/21/2020 10:47 AM

UTILITIES

REVISIONS

SHEET NO.	DATE	REVISED

KIN PROJECT INFORMATION

DESIGNATION	PROJECT DESCRIPTION	
1600808	COMPLETE ROAD RECONSTRUCTION OF I-65/I-70 FROM WASHINGTON STREET TO I-65 OVER DELAWARE STREET AND I-70 OVER VALLEY AVENUE	LEAD DES
1901935	ITS FOR I-65/I-70 FROM WASHINGTON STREET TO I-65 OVER DELAWARE STREET AND I-70 OVER VALLEY AVENUE	
1901936	SIGNS, LIGHTING, SIGNALS AND MARKING FOR I-65/I-70 FROM WASHINGTON STREET TO I-65 OVER DELAWARE STREET AND I-70 OVER VALLEY AVENUE	
1901847	BRIDGE REPLACEMENT ON I-65/I-70 NB OVER WASHINGTON STREET	
1901848	BRIDGE REPLACEMENT ON I-65/I-70 SB OVER WASHINGTON STREET	
1901849	BRIDGE REPLACEMENT ON I-65/I-70 SB CD OVER WASHINGTON STREET	
1901850	BRIDGE REPLACEMENT ON I-65/I-70 NB OVER MARKET STREET	
1901851	BRIDGE REPLACEMENT ON I-65/I-70 SB OVER MARKET STREET	
1901852	BRIDGE REPLACEMENT ON I-65/I-70 SB CD OVER MARKET STREET	
1901853	BRIDGE REPLACEMENT ON I-65/I-70 NB OVER CSX RAILROAD & OHIO STREET	
1901854	BRIDGE REPLACEMENT ON I-65/I-70 SB OVER CSX RAILROAD & OHIO STREET	
1901855	BRIDGE REPLACEMENT ON I-65/I-70 SB CD OVER CSX RAILROAD & OHIO STREET	
1901856	BRIDGE REPLACEMENT ON I-65/I-70 NB OVER NEW YORK STREET	
1901857	BRIDGE REPLACEMENT ON I-65/I-70 SB OVER NEW YORK STREET	
1901858	BRIDGE REPLACEMENT ON I-65/I-70 SB CD OVER NEW YORK STREET	
1901861	BRIDGE REPLACEMENT ON I-65/I-70 SB CD OVER VERMONT STREET	
1901862	BRIDGE REPLACEMENT ON I-65 NB & I-70 EB OVER MICHIGAN STREET	
1901863	BRIDGE REPLACEMENT ON I-65 SB/I-70 WB OVER MICHIGAN STREET	
1901864	BRIDGE REPLACEMENT ON I-65/I-70 SB CD OVER MICHIGAN STREET	
1901865	BRIDGE REPLACEMENT ON I-65 NB OVER I-70 EB ENTRANCE RAMP	
1901881	BRIDGE REPLACEMENT ON I-65 NB OVER ST. CLAIR STREET	
1901889	NEW BRIDGE CONSTRUCTION ON I-70 EB OVER ST. CLAIR STREET	
1901892	BRIDGE REPLACEMENT ON I-65 SB/I-70 WB OVER ST. CLAIR STREET	
1901896	NEW BRIDGE CONSTRUCTION ON SB CD OVER ST. CLAIR STREET	
1901897	BRIDGE REPLACEMENT ON I-65 NB OVER EAST 10TH STREET	
1901899	NEW BRIDGE CONSTRUCTION ON I-70 EB OVER EAST 10TH STREET	
1901901	BRIDGE REPLACEMENT ON I-65 SB OVER EAST 10TH STREET	
1901903	BRIDGE REPLACEMENT ON I-70 WB OVER EAST 10TH STREET	
1901905	NEW BRIDGE CONSTRUCTION ON SB CD & RAMP OVER EAST 10TH STREET	
1901906	NEW BRIDGE CONSTRUCTION ON I-65 NB CD EXIT RAMP OVER CENTRAL AVENUE	
1901907	BRIDGE REPLACEMENT ON I-65 NB OVER CENTRAL AVENUE	
1901908	BRIDGE REPLACEMENT ON I-65 SB OVER CENTRAL AVENUE	
1901909	NEW BRIDGE CONSTRUCTION ON I-65 SB CD ENTRANCE RAMP OVER CENTRAL AVE.	
1901914	BRIDGE REPLACEMENT ON I-70 WB TO I-65 NB OVER COLLEGE AVENUE	
1901915	BRIDGE REPLACEMENT ON I-65 NB & PENNSYLVANIA EXIT RAMP OVER COLLEGE AVENUE	
1901917	BRIDGE REPLACEMENT ON I-65 SB & SB CD RAMP OVER COLLEGE AVENUE	
1901918	BRIDGE REPLACEMENT ON I-65 SB & DELAWARE ENTRANCE RAMP TO I-70 EB OVER COLLEGE AVENUE & FIVE RAMPS	
1901919	BRIDGE REPLACEMENT ON I-65 NB OVER I-70 WB & RAMP	
1901920	BRIDGE REPLACEMENT ON I-70 WB TO I-65 NB OVER THREE RAMPS	
1901921	BRIDGE REPLACEMENT ON I-65 SB OVER I-70 WB & SB CD RAMP	
1901922	NEW BRIDGE CONSTRUCTION ON I-70 EB OVER I-65 NB	
1901923	BRIDGE REPLACEMENT ON I-70 WB & SB CD OVER LEWIS STREET & MONON TRAIL	
1901925	NEW BRIDGE CONSTRUCTION ON I-70 WB TO I-65 NB OVER LEWIS STREET & MONON TRAIL	
1901927	NOT USED	
1901928	BRIDGE REPLACEMENT ON I-70 EB OVER LEWIS STREET & MONON TRAIL	
1901929	PREVENTATIVE MAINTENANCE ON I-70 WB OVER ROOSEVELT AT COMMERCE AVENUE	
1901930	PREVENTATIVE MAINTENANCE ON I-70 EB OVER ROOSEVELT AT COMMERCE AVENUE	
1901931	PREVENTATIVE MAINTENANCE ON I-70 WB OVER VALLEY AVENUE	
1901932	PREVENTATIVE MAINTENANCE ON I-70 EB OVER VALLEY AVENUE	
1901933	REHABILITATE AND WIDEN ON I-65 OVER 7 STREETS, ACCESS RD, MONORAIL (AKA "MONSTER BRIDGE") - PENNSYLVANIA EXIT RAMP	
1901934	REHABILITATE AND WIDEN ON I-65 OVER 7 STREETS, ACCESS RD, MONORAIL (AKA "MONSTER BRIDGE") - DELAWARE ENTRANCE RAMP	
1902179	BRIDGE REPLACEMENT ON I-65 NB/I70 EB OVER VERMONT STREET	
1902180	BRIDGE REPLACEMENT ON I-65 SB/I70 WB OVER VERMONT STREET	

INDEX

SHEET NO.	DESIGNATION
1	TITLE
2	INDEX
3	MAINTENANCE OF TRAFFIC
4	LAYOUT
5	GENERAL PLAN - PLAN & ELEVATION VIEWS
6	GENERAL PLAN - TYPICAL SECTION
7	BENTS NO. 1 AND NO. 2 DETAILS
8	BENTS NO. 1 AND NO. 2 DETAILS
9	FRAMING PLAN
10	BEAM DETAILS
11	FLOOR DETAILS
12	APPROACH SLAB
13	WALL LAYOUT
14	WALL LAYOUT

RECOMMENDED FOR APPROVAL: _____ DESIGN ENGINEER #/#/# DATE

DESIGNED: B. WRIGHT DRAWN: L. KIRSCH

CHECKED: M. EICHENAUER CHECKED: B. WRIGHT

INDIANA
DEPARTMENT OF TRANSPORTATION

INDEX

HORIZONTAL SCALE	BRIDGE FILE
N/A	I65-111-10657 SB
VERTICAL SCALE	DESIGNATION
N/A	1902180
SURVEY BOOK	SHEET
ELECTRONIC	2 OF 14
CONTRACT	PROJECT
B-36910	1600808

BFS NO. 6412

\\bfsnt241\jobs5\641200.0000\ProjDevelopment\Design\Drawings\BRIDGES\05 OVER VERMONT STREET\Structure 1902180\1902180_S_BR_IND01 - INDEX.dwg Dylan Piercefield Plot:2/24/2020 8:06 AM Save:2/24/2020 8:05 AM

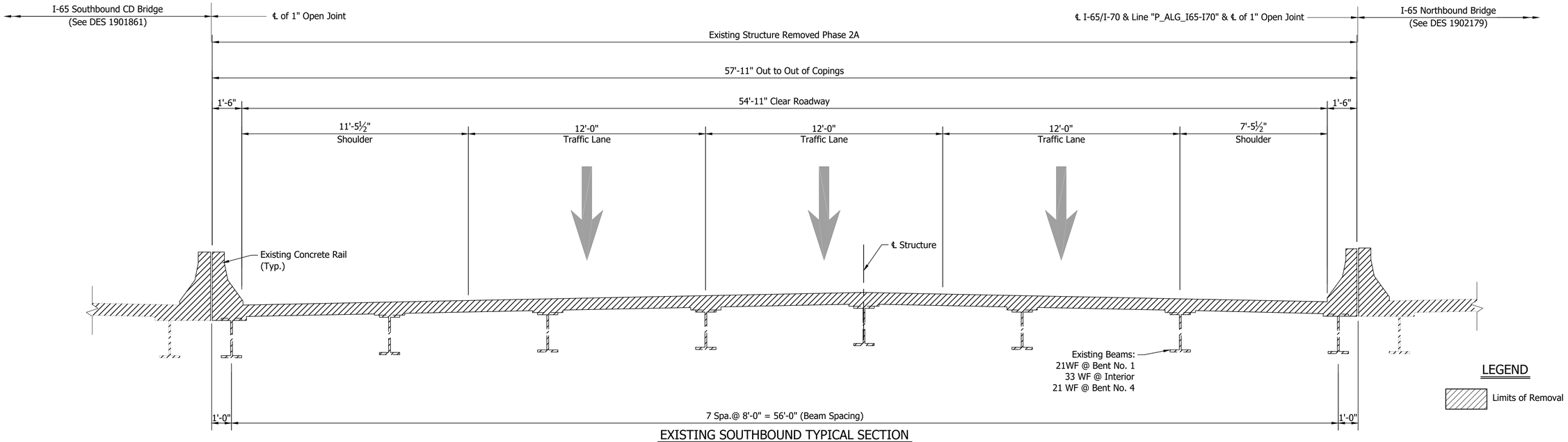

EXISTING SOUTHBOUND TYPICAL SECTION

Scale: 3/8"=1'-0"

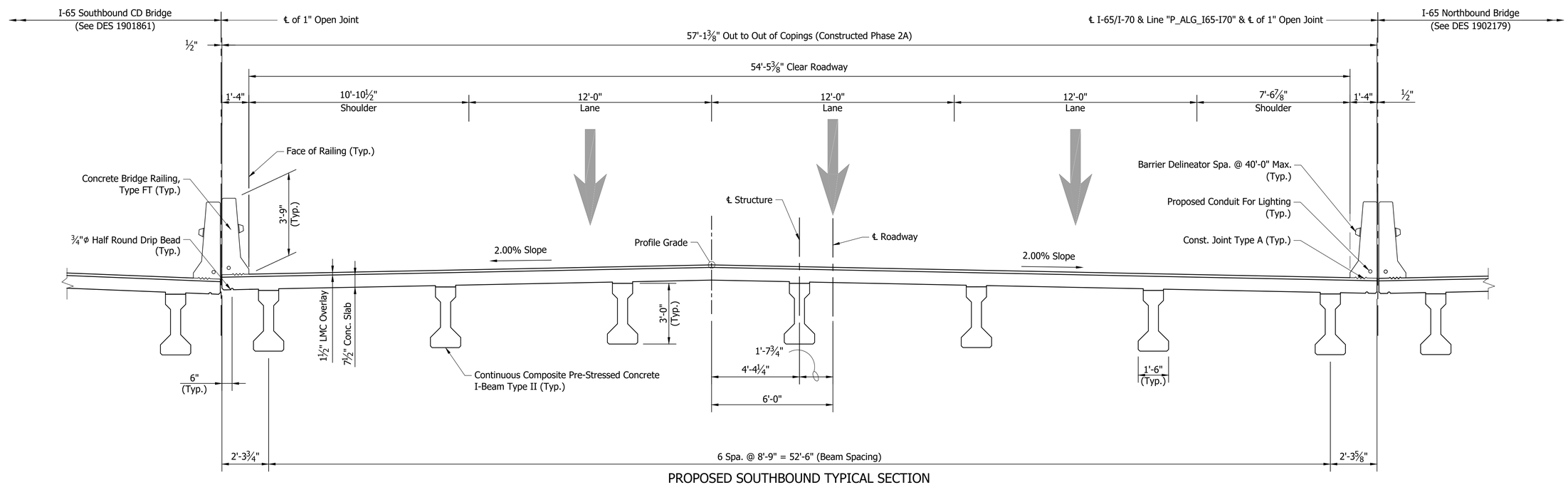

PROPOSED SOUTHBOUND TYPICAL SECTION

Scale: 3/8"=1'-0"

	RECOMMENDED FOR APPROVAL: DESIGN ENGINEER DATE	INDIANA DEPARTMENT OF TRANSPORTATION	HORIZONTAL SCALE: As Noted	BRIDGE FILE: I65-111-10657 SB
			VERTICAL SCALE: N/A	DESIGNATION: 1902180
	DESIGNED: V. SATHIRAJU DRAWN: D. PIERCEFIELD	MAINTENANCE OF TRAFFIC	SURVEY BOOK: ELECTRONIC	SHEET: 3 OF 14
	CHECKED: B. WRIGHT CHECKED: B. WRIGHT		CONTRACT: B-36910	PROJECT: 1600808

BFS NO. 6412

\\bfsn1241\jobs5\641200.0000\ProjDevelopment\Design\Drawings\BRIDGES\05 OVER VERMONT STREET\Structure 1902180\1902180_S_BR_MOT01 - MOT.dwg Dylan Piercefield Plot:2/24/2020 6:12 AM Save:2/6/2020 6:23 AM

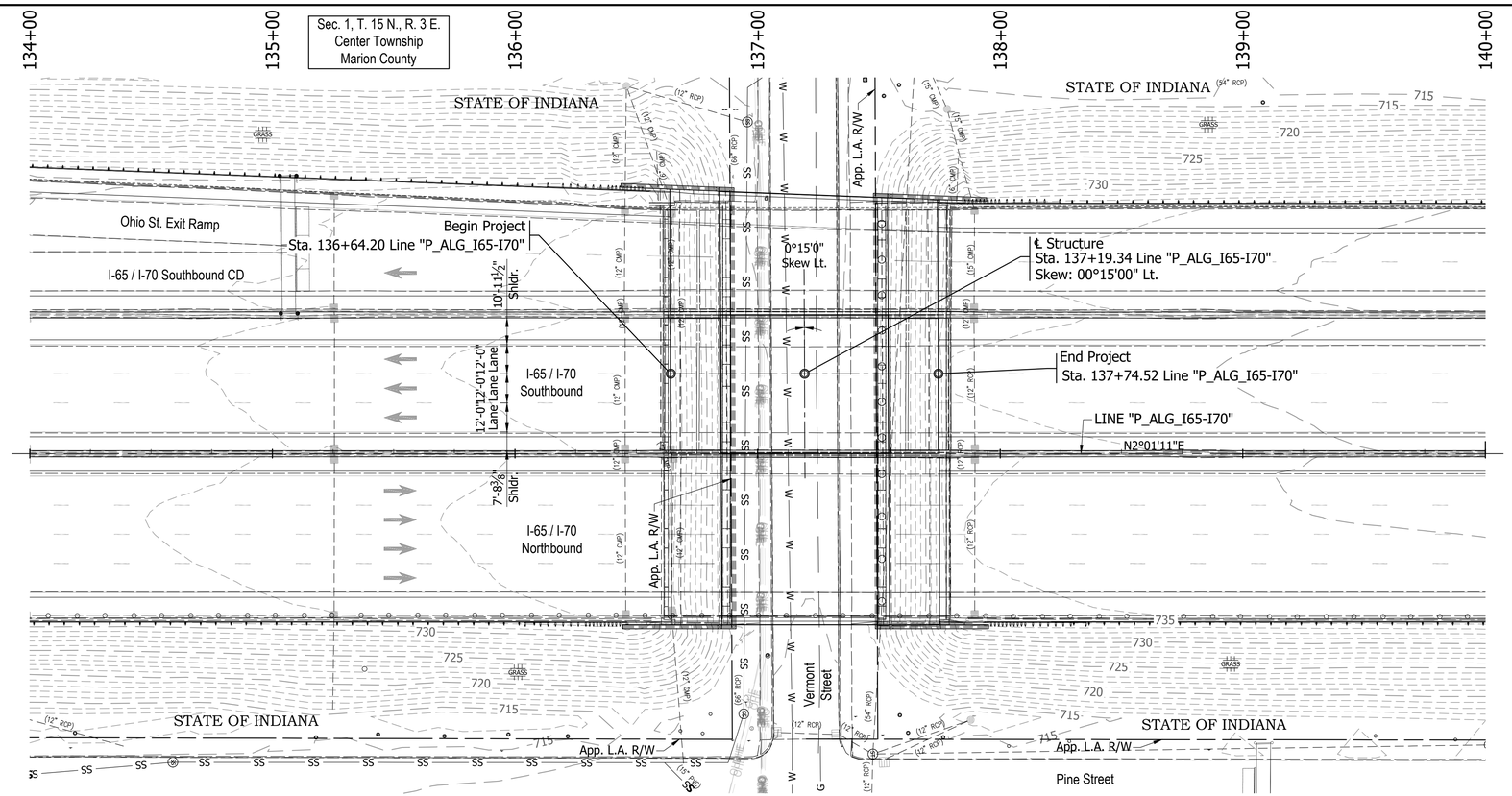

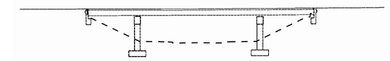

EXISTING STRUCTURE

The existing structure was built in 1974. Structure was rehabilitated in 2003 & 2013 and had emergency repairs in October 2013. The structure is a 3-span continuous composite 33" WF steel beam.

Span lengths: 1 @ 25'-0", 1 @ 64'-0", 1 @ 27'-6"

Clear roadway 65'-2½". Total length of 117'-8 5/8"

Existing structure to be removed.

Existing plans are on file with the Indiana Department of Transportation under Bridge File No. I-65-112-5731, I-65-112-5731A and I-65-112-5731B.

EARTHWORK TABULATION

See Roadway Plans (DES #_____) for earthwork tabulation.

NOTE: ALL TOPOGRAPHY INFORMATION REFERENCED TO LINE "P_ALG_I65-I70" UNLESS NOTED.

ALL R/W ON THIS SHEET DESCRIBED FROM LINE "P_ALG_I65-I70" UNLESS OTHERWISE NOTED

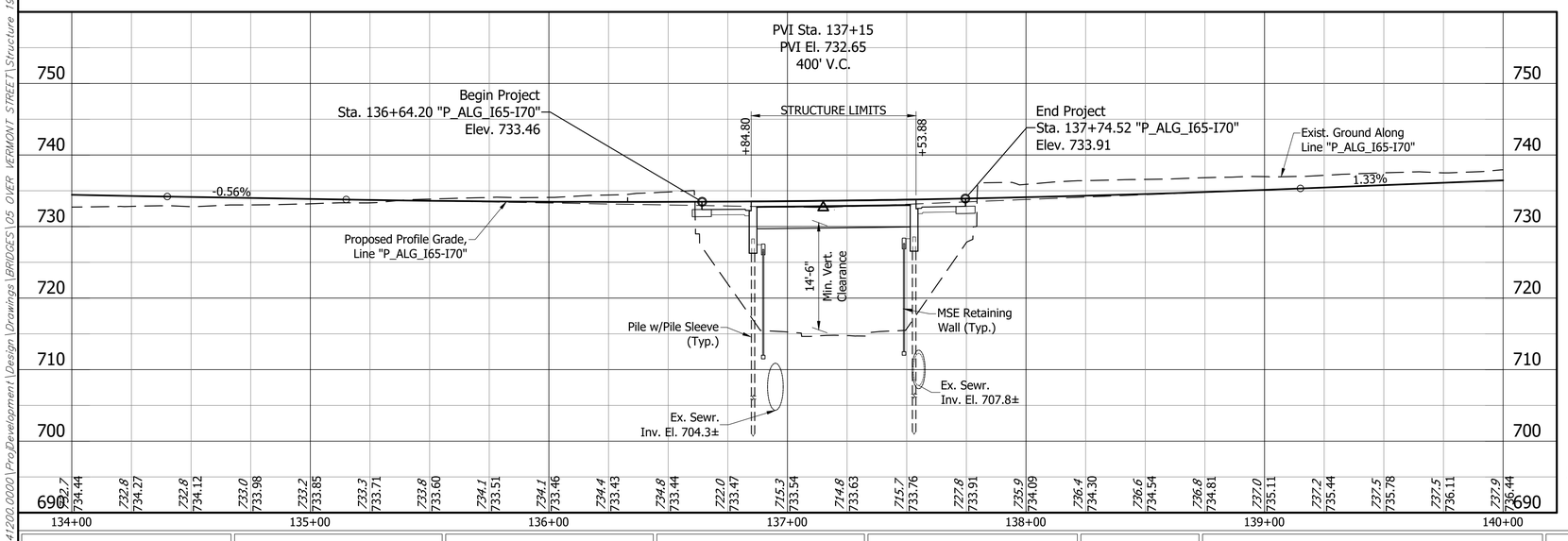

Notes:

1. For R/W and property information, see Location Control Route Survey (DES # _____).
2. For alignment data, see Geometric Layout Sheets (DES #_____).
3. See Road Plans (DES #_____) for Horizontal & Vertical Control Data.

CONTINUOUS COMPOSITE PRE-STRESSED
CONCRETE I-BEAM TYPE II BRIDGE
1 SPAN: 67'-6"
54'-5 3/8" CLEAR ROADWAY; SKEW: 00°15'00" LT.
I-65 / I-70 S.B. OVER VERMONT STREET
MARION COUNTY

RECOMMENDED FOR APPROVAL: _____ DESIGN ENGINEER #/#/# DATE

DESIGNED: B. WRIGHT DRAWN: L. KIRSCH
CHECKED: M. EICHENAUER CHECKED: B. WRIGHT

INDIANA
DEPARTMENT OF TRANSPORTATION

LAYOUT

HORIZONTAL SCALE	BRIDGE FILE
1" = 30'	I65-111-10657 SB
VERTICAL SCALE	DESIGNATION
1" = 10'	1902180
SURVEY BOOK	SHEET
ELECTRONIC	4 OF 14
CONTRACT	PROJECT
B-36910	1600808

BFS NO. 6412

\\bfs\r241\Jobs5\641200.0000\Proj\Development\Design\Drawings\BRIDGES\05 OVER VERMONT STREET\Structure 1902180\1902180_S_BR_LA101.dwg Dylan Piercefield Plot: 2/24/2020 6:13 AM Save: 2/18/2020 9:00 AM

STRUCTURE TO BE BUILT ON A 400' VERTICAL CURVE

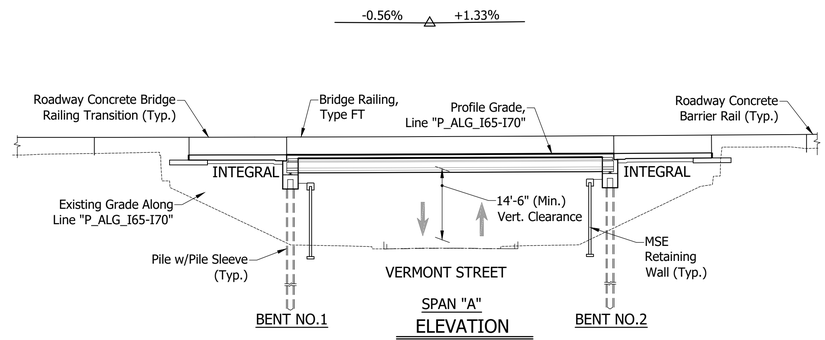

SPAN "A"

ELEVATION

Scale: 1/16" = 1'-0"

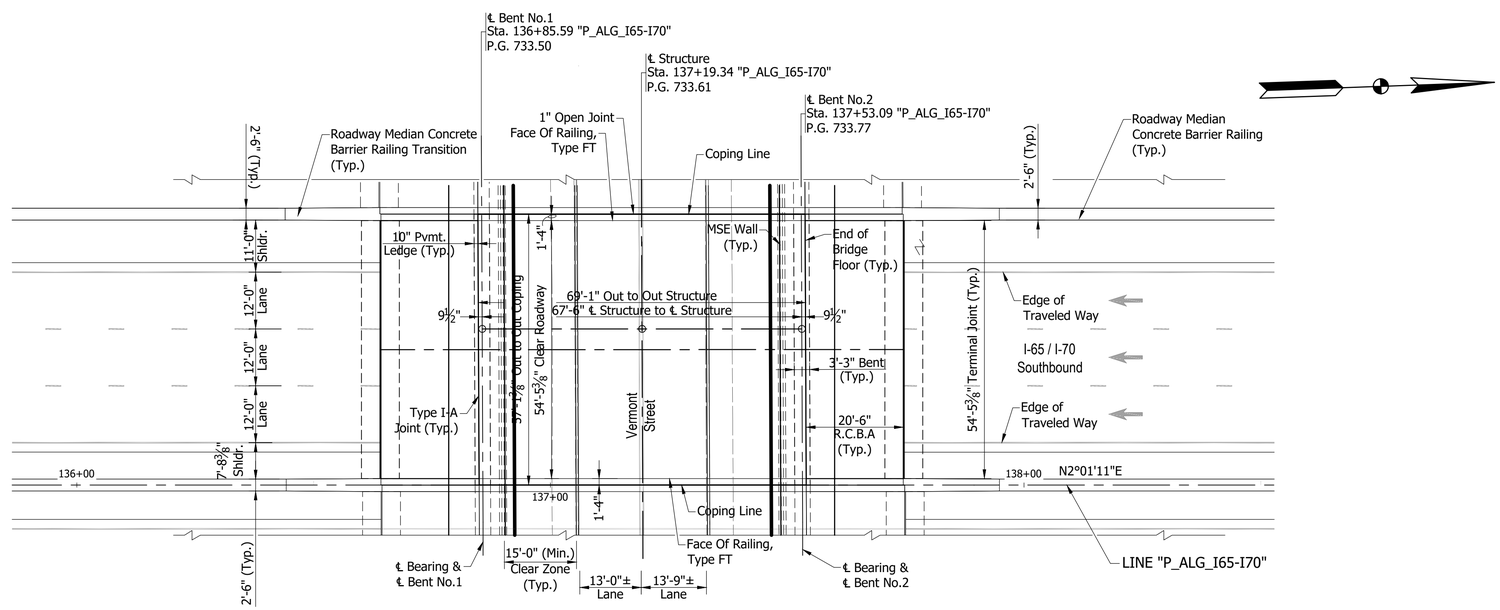

PLAN

Scale: 1/16" = 1'-0"

NOTE:
See Sheet 6 For Typical Section

CONTINUOUS COMPOSITE PRE-STRESSED
CONCRETE I-BEAM TYPE II BRIDGE
1 SPAN: 67'-6"
54'-5 3/8" CLEAR ROADWAY; SKEW: 00°15'00" LT.
I-65 / I-70 S.B. OVER VERMONT STREET
MARION COUNTY

RECOMMENDED FOR APPROVAL: DESIGN ENGINEER #/#/# DATE	INDIANA DEPARTMENT OF TRANSPORTATION	HORIZONTAL SCALE: As Noted	BRIDGE FILE: I65-111-10657 SB
		VERTICAL SCALE: N/A	DESIGNATION: 1902180
DESIGNED: V. SATHIRAJU DRAWN: L. KIRSCH	GENERAL PLAN - PLAN & ELEVATION VIEWS	SURVEY BOOK: ELECTRONIC	SHEET: 5 OF 14
CHECKED: B. WRIGHT CHECKED: B. WRIGHT		CONTRACT: B-36910	PROJECT: 1600808

BFS NO. 6412

\\bfsnt241\Jobs5\641200.0000\ProjDevelopment\Design\Drawings\BRIDGES\05 OVER VERMONT STREET\Structure 1902180\1902180_S_BR_PLN01.dwg Dylan Piercefield Plot:2/24/2020 6:13 AM Save:2/20/2020 4:42 PM

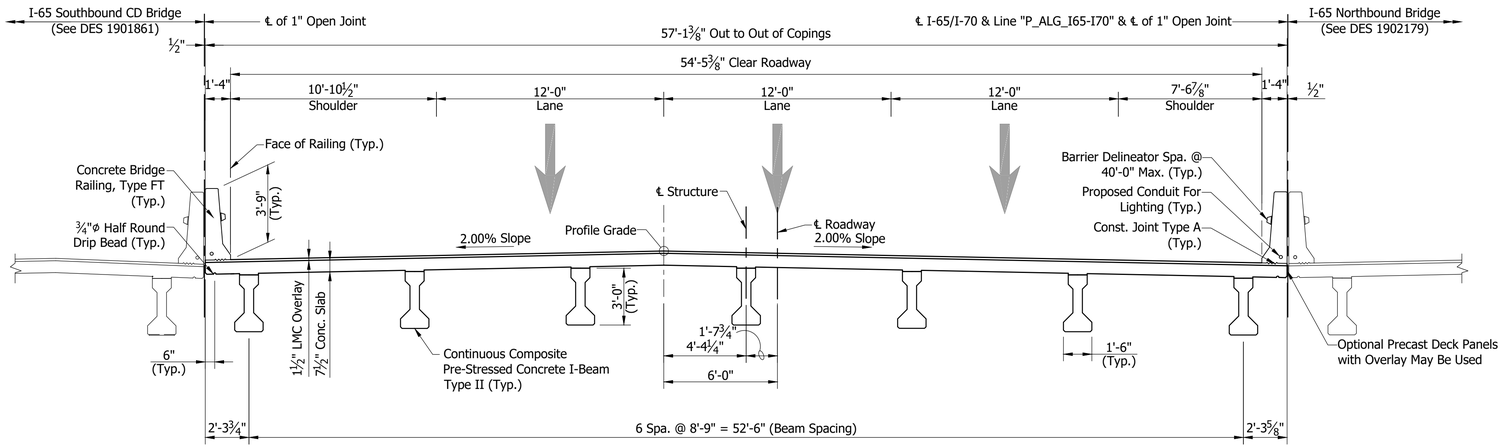

TYPICAL SECTION

Scale: 1/4"= 1'-0"

GENERAL NOTES

The existing structure shall be removed.

Reinforcing bars covering shall be 3 ½" in top and 1" min. in bottom of floor slabs and 3" in footings except bottom steel which shall be 4", and 2" in all other parts, unless noted.

Concrete in floor slab, and diaphragms, barriers, and end bents shall be an alternate Class C in accordance with the Technical Provisions.

Reinforcing Bars in Deck, Barrier, and End Bent Diaphragm Extending into the Deck shall be Stainless Steel. Reinforcing Bars in End Bent Diaphragm not Extending into the Deck and in the Cap shall be Epoxy Coated.

All exposed faces of the MSE walls and reinforced concrete bridge approach slabs shall receive surface seal.

See Bridge Aesthetic Plan for Architectural Details.

DESIGN DATA

LIVE LOAD:

Superstructure and Substructure Designed for HL-93 loading in accordance with the AASHTO LRFD Bridge Design Specifications, 8th Edition, 2017 and its subsequent revisions.

DEAD LOAD:

Designed for Actual Dead Load plus 35 psf of future wearing surface, and 15 psf for SIP Metal Deck Forms.

FLOOR SLAB:

Slab designed with a 7 ½" structural depth and a 1 ½" very early strength LMC wearing surface.

DESIGN STRESSES

CONSTRUCTION LOADING:

The exterior girder has been checked for strength, deflection, and overturning using the construction loads shown below. Cantilever overhang brackets were assumed for support of the deck overhang past the edge of the exterior beam. The finishing machine was assumed to be supported 6 in. outside the vertical coping form. The top overhang brackets were assumed to be located 6 in. past the edge of the vertical coping form. The bottom overhang brackets were assumed to be braced against the intersection of the girder bottom flange and web.

DECK FALSEWORK LOADS:

Designed for 15 psf for permanent metal stay-in-place deck forms, removable deck forms, and 2 ft. exterior walkway.

CONSTRUCTION LIVE LOAD:

Designed for 20 psf extending 2 ft. past the edge of coping and 75 lb/ft vertical force applied at a distance of 6 in. outside the face of coping over a 30 foot length of the deck centered with the finishing machine.

FINISHING-MACHINE LOAD:

4500 lb distributed over 10 ft. along the coping.

WIND LOAD:

Designed for 70 mph horizontal wind load in accordance with LRFD 3.8.1.

ULTIMATE DESIGN STRENGTHS:

Class "A" Concrete	f'c = 3,500 p.s.i.
Class "B" Concrete	f'c = 3,000 p.s.i.
Class "C" Concrete	f'c = 4,000 p.s.i.
Reinforcing Steel (Grade 60)	Fy = 60,000 p.s.i. (barrier)
	Fy = 75,000 p.s.i. (deck)
	Fy = 75,000 p.s.i. (all other locations)

SEISMIC DESIGN DATA:

Seismic Site Class	C
PGA (g)	0.051
S_s (g)	0.12
S_1 (g)	0.051
S_{D1} (g)	0.086
Seismic Design Category	A

CONTINUOUS COMPOSITE PRE-STRESSED CONCRETE I-BEAM TYPE II BRIDGE
1 SPAN: 67'-6"
54'-5 3/8" CLEAR ROADWAY; SKEW: 00°15'00" LT.
I-65 / I-70 S.B. OVER VERMONT STREET
MARION COUNTY

RECOMMENDED FOR APPROVAL: _____ DESIGN ENGINEER #/#/# DATE

DESIGNED: V. SATHIRAJU DRAWN: L. KIRSCH
CHECKED: B. WRIGHT CHECKED: B. WRIGHT

INDIANA
DEPARTMENT OF TRANSPORTATION

GENERAL PLAN - TYPICAL SECTION

HORIZONTAL SCALE	BRIDGE FILE
As Noted	I65-111-10657 SB
VERTICAL SCALE	DESIGNATION
N/A	1902180
SURVEY BOOK	SHEET
ELECTRONIC	6 OF 14
CONTRACT	PROJECT
B-36910	1600808

BFS NO. 6412

\\bfsn1241\Jobs5\641200.0000\ProjDevelopment\Design\Drawings\BRIDGES\05 OVER VERMONT STREET\Structure 1902180\1902180_S_BR_PLN02.dwg Dylan Piercefield Plot:2/24/2020 6:13 AM Save:2/20/2020 9:36 AM

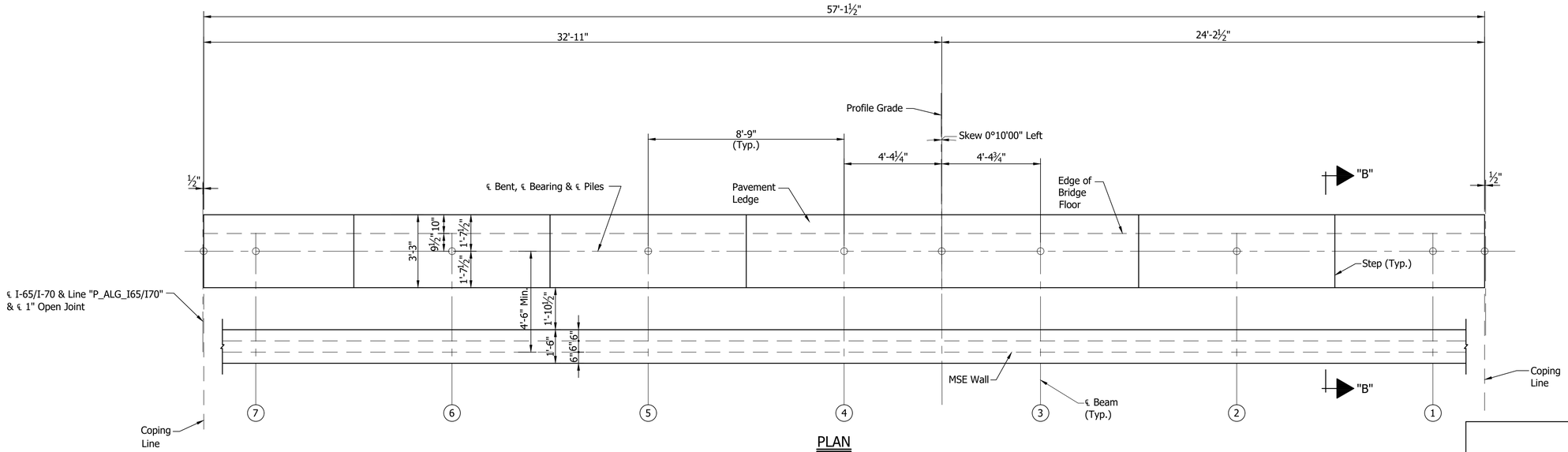

PLAN
BENT NO.1 SB (SHOWN)
BENT NO.2 SB (SIMILAR)
Scale: ⅜"=1'-0"

SEAT ELEVATIONS

Beam No.	7	6	5	4	3	2	1
Bent No.1	728.06	728.24	728.31	728.49	728.49	728.31	728.13
Bent No.2	728.22	728.40	728.62	728.80	728.80	728.62	728.40

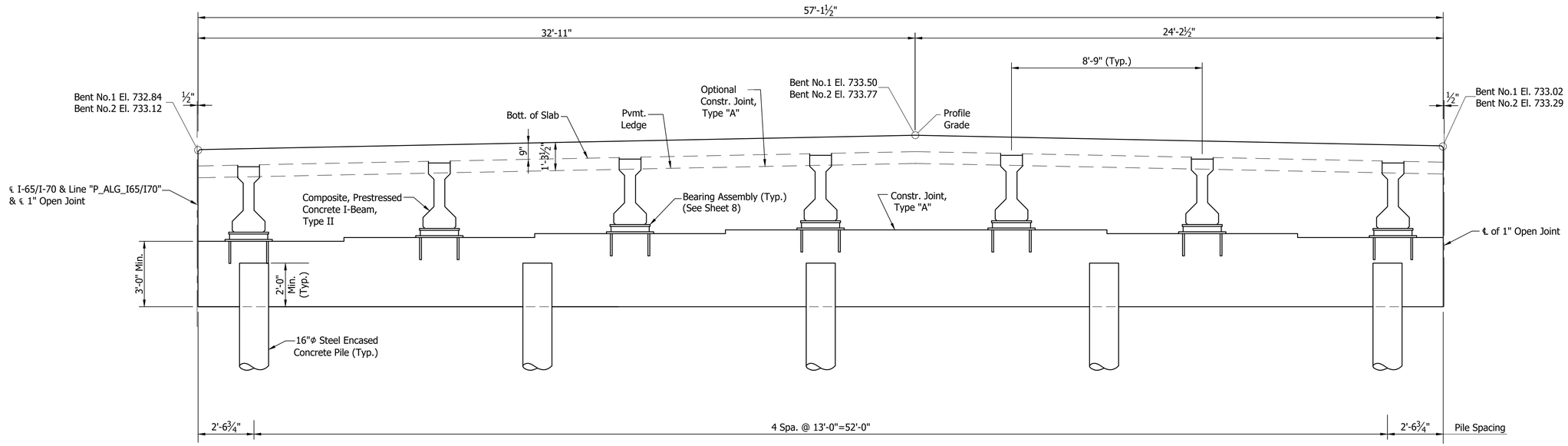

SECTION ALONG ℄ BENT
Scale: ⅜"=1'-0"

RECOMMENDED FOR APPROVAL: _____ DESIGN ENGINEER — #/#/# DATE

DESIGNED: V. SATHIRAJU DRAWN: K. COFFMAN
CHECKED: B. WRIGHT CHECKED: B. WRIGHT

INDIANA
DEPARTMENT OF TRANSPORTATION

BENTS NO. 1 AND NO. 2 DETAILS

HORIZONTAL SCALE	BRIDGE FILE
As Noted	I65-111-10657 SB
VERTICAL SCALE	DESIGNATION
N/A	1902180
SURVEY BOOK	SHEET
ELECTRONIC	7 OF 14
CONTRACT	PROJECT
B-36910	1600808

BFS NO. 6412

\\bfsn\241\jobs5\641200.0000\Pro_Development\Design\Drawings\BRIDGES\05 OVER VERMONT STREET\Structure 1902180\1902180_S_BR_BNT01 - BENT DETAIL.dwg Dylan Piercefield Plot:2/24/2020 1:25 PM Save:2/24/2020 1:25 PM

⊛ As an alternate a 7/8"ø x 1'-3" Long Headed Automatic Welded Stud may be used.

⊗ Setting Tolerance of Bottom Plate-Level with to not more than 1/16" below top of Concrete.

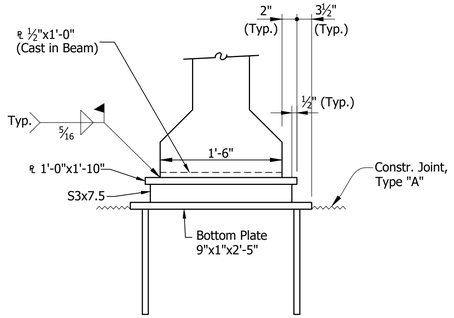

ELEVATION

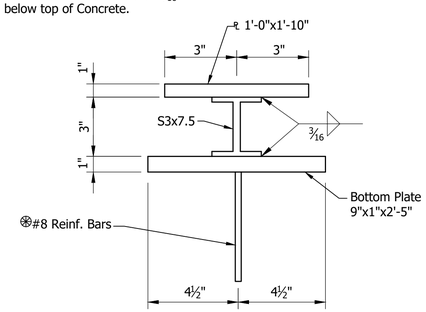

SECTION

BEARING ASSEMBLY

Not to Scale

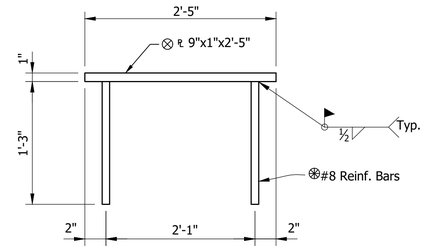

BOTTOM PLATE DETAIL

Not to Scale

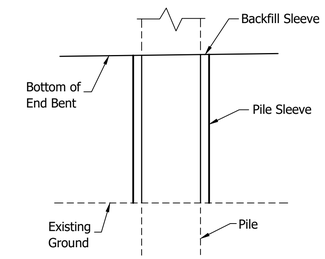

PILE SLEEVE DETAIL

Not to Scale

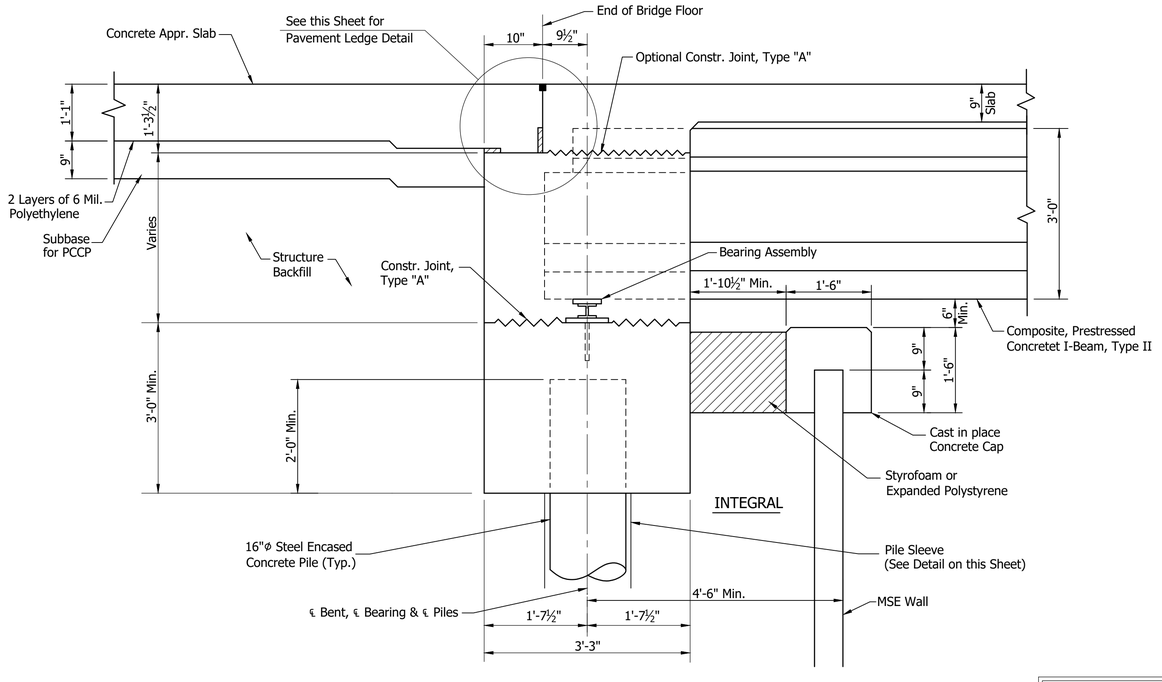

SECTION "B-B"

Not to Scale

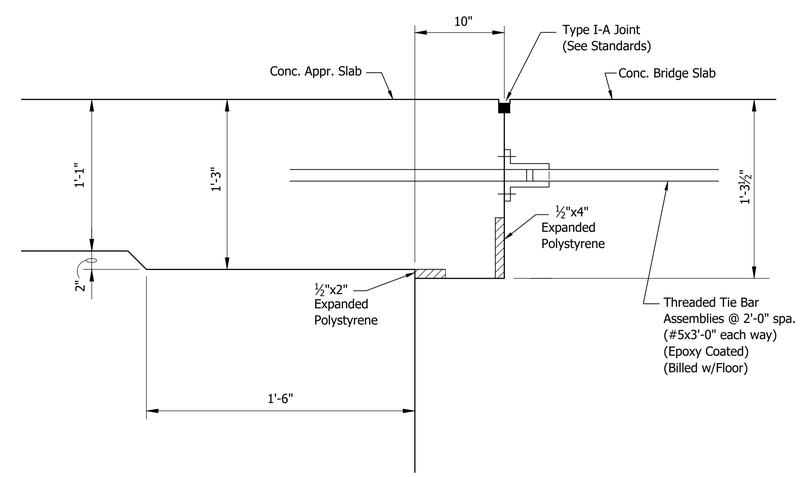

PAVEMENT LEDGE DETAIL

Not to Scale

RECOMMENDED FOR APPROVAL: DESIGN ENGINEER	#/#/# DATE	INDIANA DEPARTMENT OF TRANSPORTATION	HORIZONTAL SCALE: As Noted; BRIDGE FILE: I65-111-10657 SB; VERTICAL SCALE: N/A; DESIGNATION: 1902180
DESIGNED: V. SATHIRAJU	DRAWN: D. SHEETZ	BENTS NO. 1 AND NO. 2 DETAILS	SURVEY BOOK: ELECTRONIC; SHEET: 8 OF 14; CONTRACT: B-36910; PROJECT: 1600808
CHECKED: B. WRIGHT	CHECKED: B. WRIGHT		

BFS NO. 6412

\\bfsn1241\jobs5\641200.0000\ProjDevelopment\Design\Drawings\BRIDGES\05 OVER VERMONT STREET\Structure 1902180\902180_S_BR_BNT02 - BENT DETAIL.dwg Dylan Piercefield Plot:2/24/2020 6:13 AM Save:1/22/2020 9:52 AM

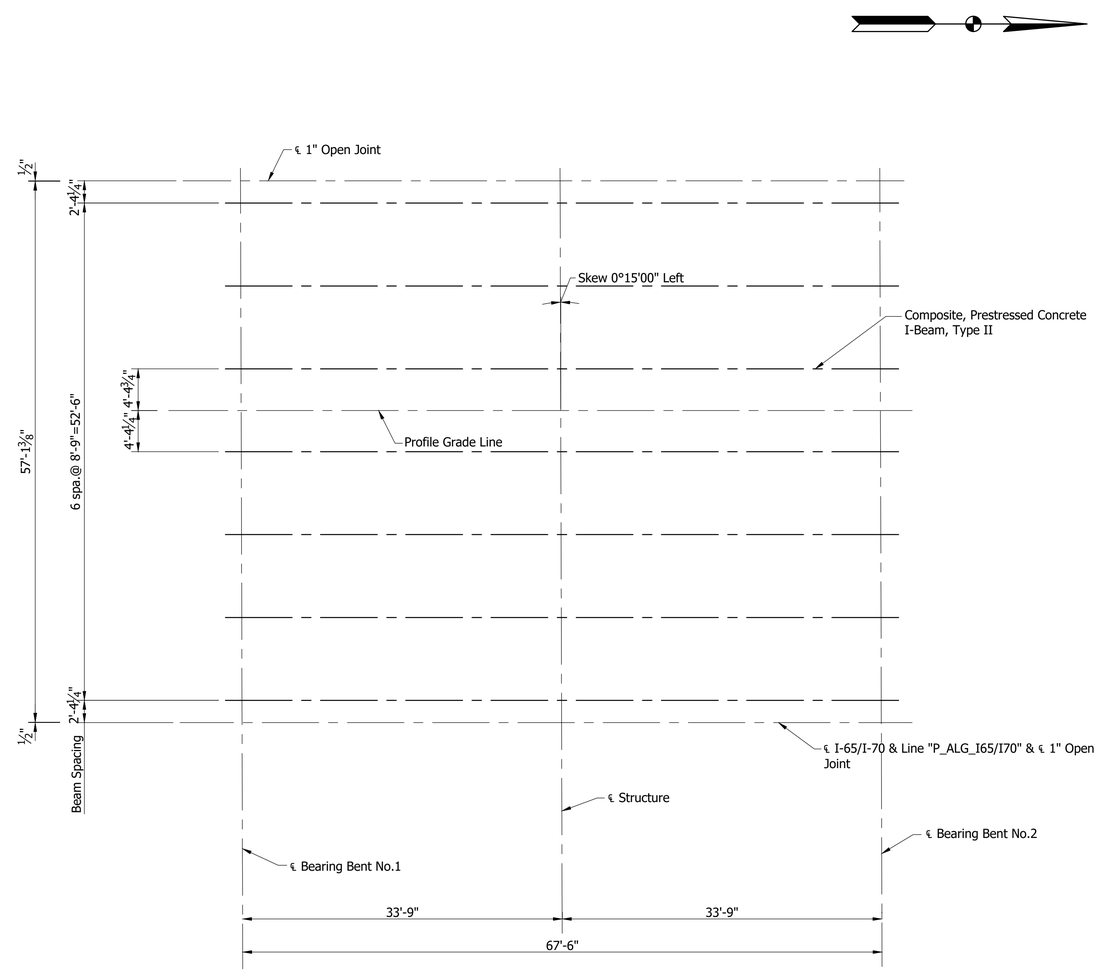

BEAM ERECTION PLAN

Scale: 1/8" = 1'-0"

RECOMMENDED FOR APPROVAL: DESIGN ENGINEER #/#/# DATE	INDIANA DEPARTMENT OF TRANSPORTATION	HORIZONTAL SCALE: As Noted	BRIDGE FILE: I65-111-10657 SB
		VERTICAL SCALE: N/A	DESIGNATION: 1902180
DESIGNED: V. SATHIRAJU DRAWN: M. SCOTT	FRAMING PLAN	SURVEY BOOK: ELECTRONIC	SHEET: 9 OF 14
CHECKED: B. WRIGHT CHECKED: B. WRIGHT		CONTRACT: B-36910	PROJECT: 1600808

6412

BFS NO.

\\bfsn1241\jobs5\641200.0000\ProjDevelopment\Design\Drawings\BRIDGES\05 OVER VERMONT STREET\Structure 1902180\1902180_S_BR_FRM01 - FRAMING PLAN.dwg Dylon Piercefield Plot:2/24/2020 6:13 AM Save:12/19/2019 3:42 PM

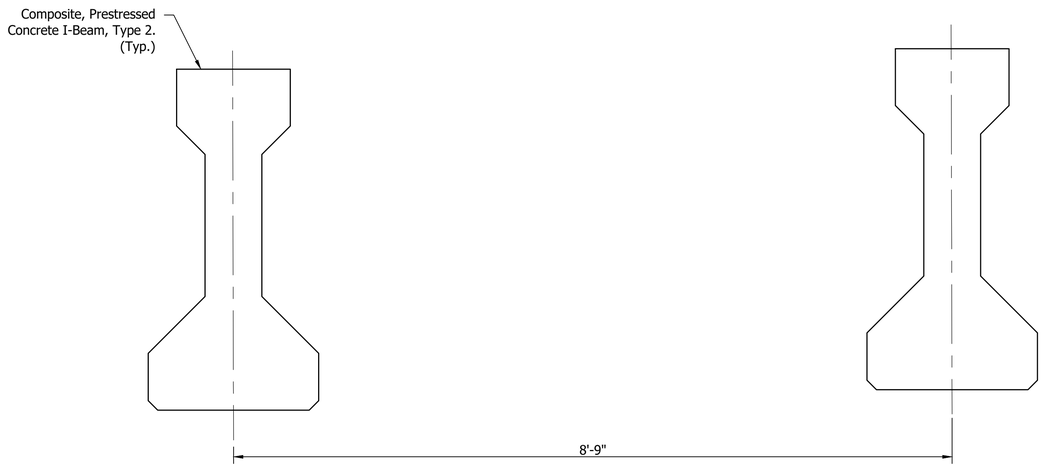

ELEVATION
Scale: 1-1/2" = 1'-0"

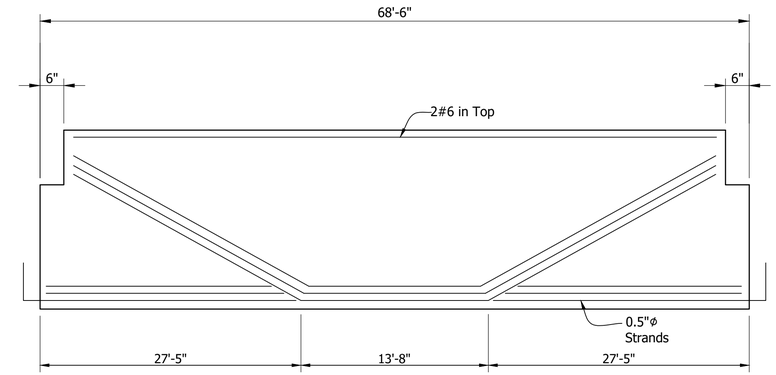

BEAM ELEVATION
SPAN "A" (SHOWN)
SHOWING DRAPED STRANDS
Not to Scale

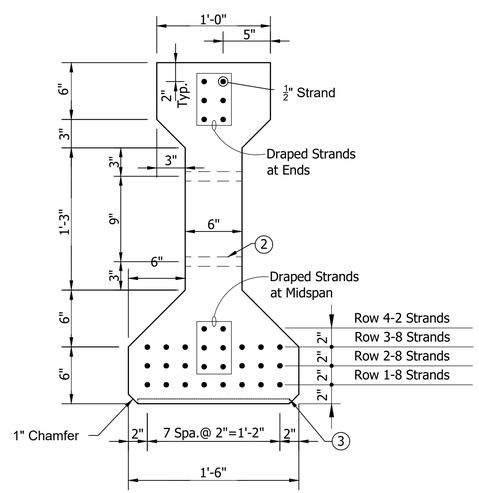

SECTION SHOWING STRANDS (SPAN A)

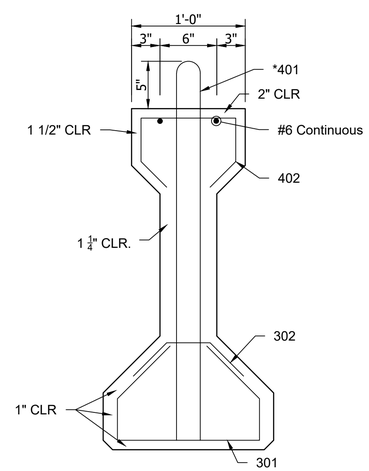

SECTION SHOWING REINFORCING

BEAM SECTIONS
Scale: 1-1/2" = 1'-0"

✳ Denotes Epoxy Coated

Note:
Bars 1" Clear
unless noted.

1. Surface Seal req'd on top of all Beams and Exterior Face of Exterior Beams
2. 1" Ø Holes or 3/4"Ø Inserts for Dowels at Bent or Pier. (See Beam Plans)
3. ℞ 1/2"x12"x1'-4" at End Bent Ends only

RECOMMENDED FOR APPROVAL: DESIGN ENGINEER	#/#/# DATE	INDIANA DEPARTMENT OF TRANSPORTATION	HORIZONTAL SCALE: As Noted; VERTICAL SCALE: N/A; BRIDGE FILE: I65-111-10657 SB; DESIGNATION: 1902180
DESIGNED: V. SATHIRAJU DRAWN: K. COFFMAN		BEAM DETAILS	SURVEY BOOK / ELECTRONIC / CONTRACT: B-36910; SHEET: 10 OF 14; PROJECT: 1600808
CHECKED: B. WRIGHT CHECKED: B. WRIGHT			

BFS NO. 6412

\\bfsn1241\jobs5\641200.0000\ProjDevelopment\Design\Drawings\BRIDGES\05 OVER VERMONT STREET\Structure 1902180\1902180_S_BR_BMD01 - BEAM DETAIL.dwg Dylan Piercefield Plot:2/24/2020 6:13 AM Save:2/18/2020 8:46 AM

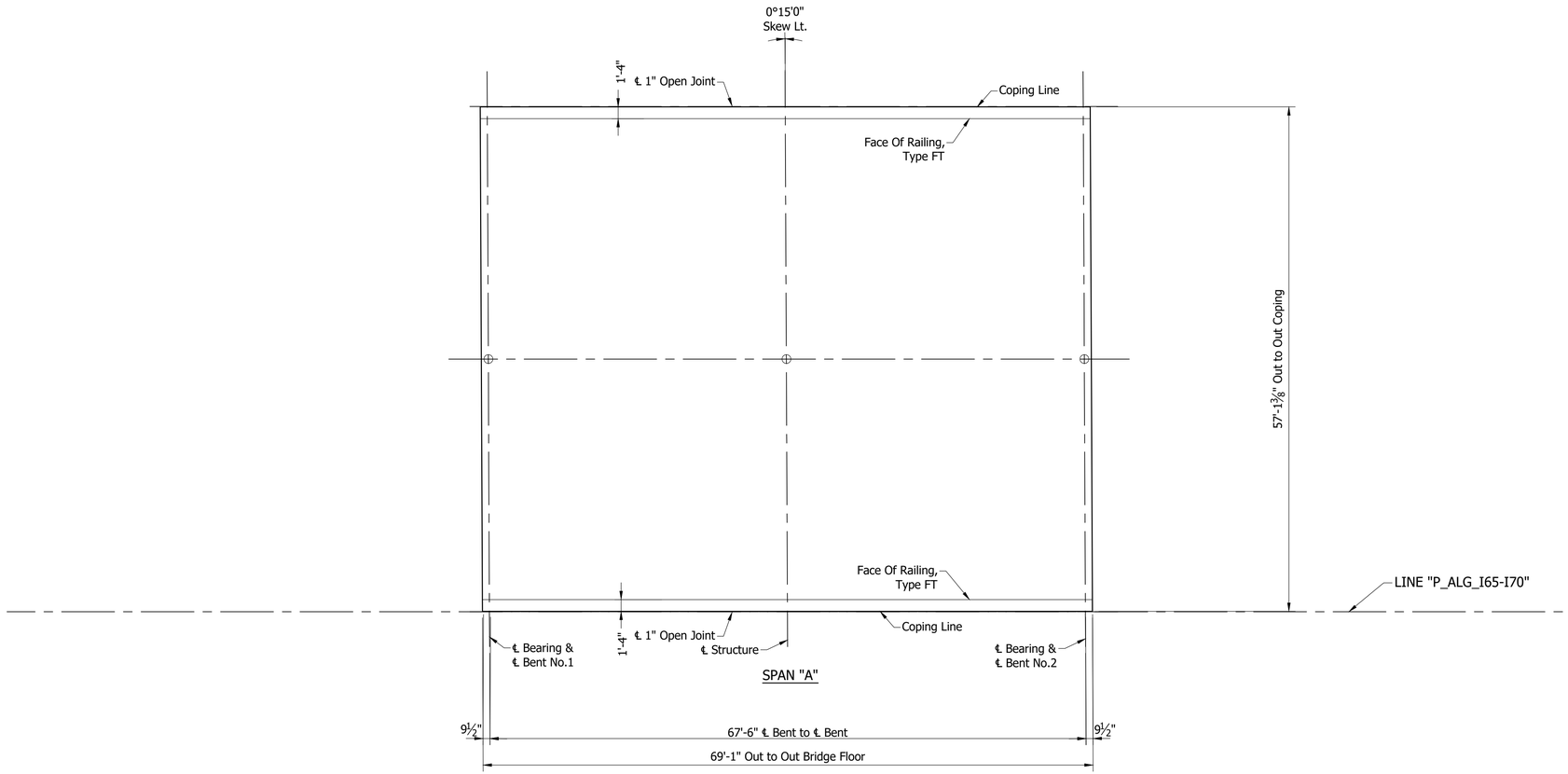

FLOOR PLAN

Scale: 1/8" = 1'-0"

NOTE:
See Sheet ___ For _____

RECOMMENDED FOR APPROVAL: _____ DESIGN ENGINEER	#/#/# DATE	INDIANA DEPARTMENT OF TRANSPORTATION	HORIZONTAL SCALE: As Noted	BRIDGE FILE: I65-111-10657 SB
			VERTICAL SCALE: N/A	DESIGNATION: 1902180
DESIGNED: V. SATHIRAJU	DRAWN: L. KIRSCH	GENERAL PLAN - TYPICAL SECTION	SURVEY BOOK: ELECTRONIC	SHEET: 6 OF 14
CHECKED: B. WRIGHT	CHECKED: B. WRIGHT		CONTRACT: B-36910	PROJECT: 1600808

BFS NO. 6412

\\bfsnt241\Jobs5\641200.0000\Proj\Development\Design\Drawings\BRIDGES\05 OVER VERMONT STREET\Structure 1902180\1902180_S_BR_FLR01.dwg Dylan Piercefield Plot: 2/24/2020 6:14 AM Save: 1/31/2020 7:08 AM

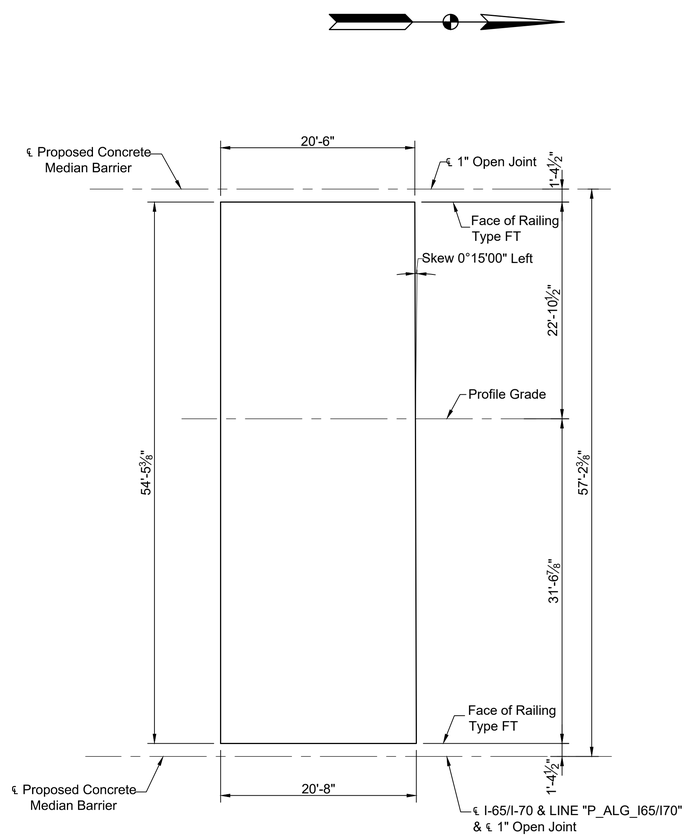

PLAN
SOUTH SLAB (SHOWN)
NORTH SLAB (OPP. HAND)
Scale: ⅛"=1'-0"

RECOMMENDED FOR APPROVAL: DESIGN ENGINEER / DATE #/#/#	INDIANA DEPARTMENT OF TRANSPORTATION	HORIZONTAL SCALE: As Noted	BRIDGE FILE: I65-111-10657 SB	6412
		VERTICAL SCALE: N/A	DESIGNATION: 1902180	
DESIGNED: D. SHEETZ DRAWN: D. SHEETZ	APPROACH SLAB	SURVEY BOOK: ELECTRONIC	SHEET: 12 OF 14	BFS NO.
CHECKED: B. WRIGHT CHECKED: B. WRIGHT		CONTRACT: B-36910	PROJECT: 1600808	

\\bfsn1241\jobs5\641200.0000\ProjDevelopment\Design\Drawings\BRIDGES\05 OVER VERMONT STREET\Structure 1902180\1902180_S_BR_APS01 - APPROACH SLAB.dwg Dylon Piercefield Plot:2/24/2020 6:14 AM Save:2/18/2020 9:01 AM

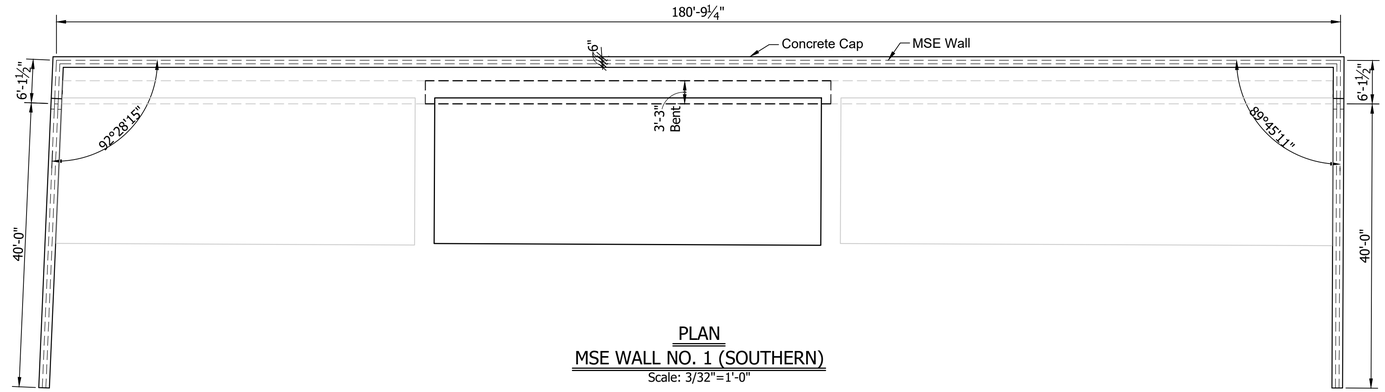

PLAN
MSE WALL NO. 1 (SOUTHERN)
Scale: 3/32"=1'-0"

NOTE:
Elevation Looking At Back Face of Wall

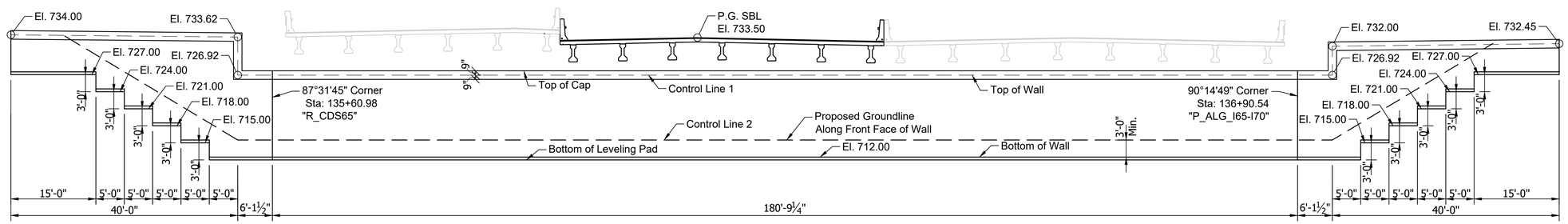

ELEVATION
MSE WALL NO. 1 (SOUTHERN)
Scale: 3/32"=1'-0"

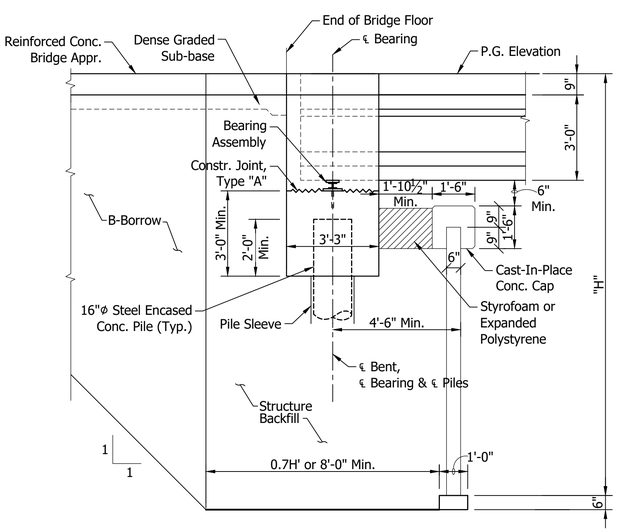

SECTION
MSE WALL NO. 1
Scale: 3/8"=1'-0"

RECOMMENDED FOR APPROVAL: DESIGN ENGINEER DATE	INDIANA DEPARTMENT OF TRANSPORTATION	HORIZONTAL SCALE: As Noted	BRIDGE FILE: I65-111-10657 SB	
		VERTICAL SCALE: N/A	DESIGNATION: 1902180	
DESIGNED: B. WRIGHT DRAWN: D. PIERCEFIELD	WALL LAYOUT	SURVEY BOOK: ELECTRONIC	SHEET: 13 OF 14	
CHECKED: M. EICHENAUER CHECKED: B. WRIGHT		CONTRACT: B-36910	PROJECT: 1600808	

BFS NO. 6412

\\bfsn1241\Jobs5\641200.0000\ProjDevelopment\Design\Drawings\BRIDGES\05 OVER VERMONT STREET\Structure 1902180\1902180_S_BR_WL01 - WALL 1.dwg Dylan Piercefield Plot:2/24/2020 6:14 AM Save:2/18/2020 7:16 AM

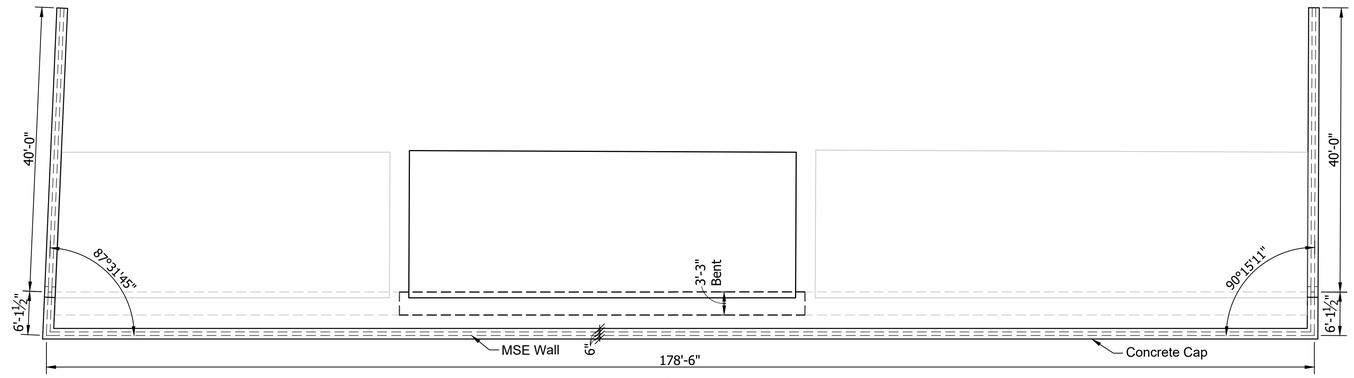

PLAN
MSE WALL NO. 2 (NORTHERN)
Scale: 3/32"=1'-0"

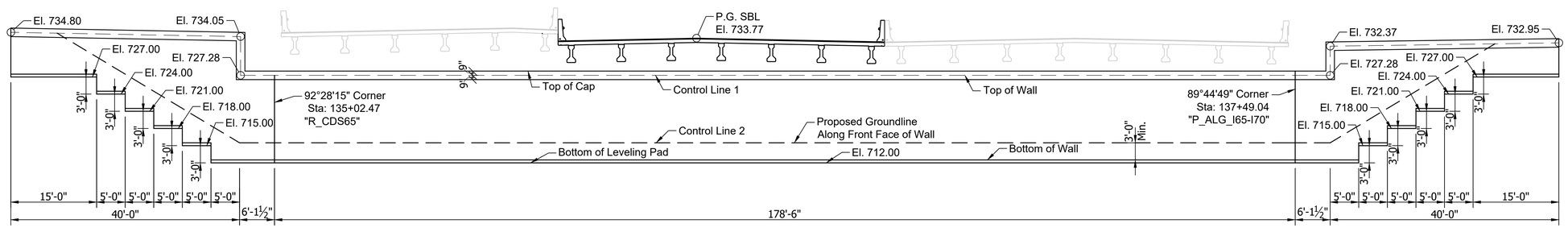

ELEVATION
MSE WALL NO. 2 (NORTHERN)
Scale: 3/32"=1'-0"

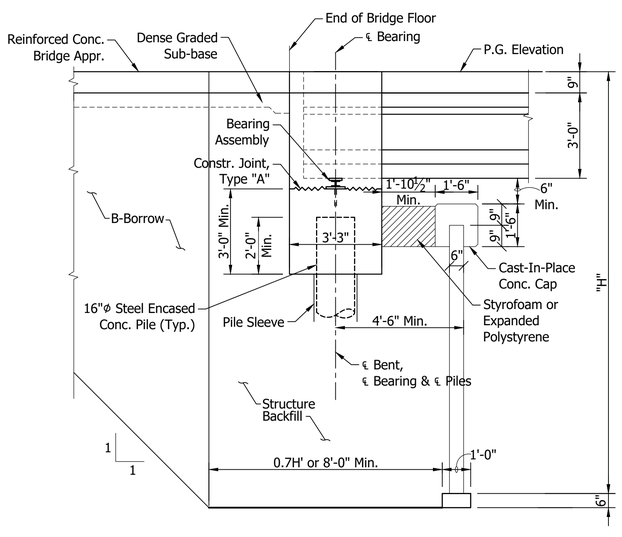

SECTION
MSE WALL NO. 2
Scale: 3/8"=1'-0"

	RECOMMENDED FOR APPROVAL: DESIGN ENGINEER DATE	INDIANA DEPARTMENT OF TRANSPORTATION	HORIZONTAL SCALE: As Noted	BRIDGE FILE: I65-111-10657 SB
			VERTICAL SCALE: N/A	DESIGNATION: 1902180
	DESIGNED: B. WRIGHT DRAWN: D. PIERCEFIELD	WALL LAYOUT	SURVEY BOOK: ELECTRONIC	SHEET: 14 OF 14
	CHECKED: M. EICHENAUER CHECKED: B. WRIGHT		CONTRACT: B-36910	PROJECT: 1600808

6412

BFS NO.

\\bfsn1241\jobs5\641200.0000\ProjDevelopment\Design\Drawings\BRIDGES\05 OVER VERMONT STREET\Structure 1902180\1902180_S_BR_WL01 - WALL 2.dwg Dylon Piercefield Plot:2/24/2020 6:14 AM Save:2/18/2020 8:53 AM

PROJECT	DESIGNATION
1600808	1901861
CONTRACT	BRIDGE FILE
B-36910	I65-111-10610 CD

STRUCTURE INFORMATION

STRUCTURE	TYPE	SPAN & SKEW	OVER	STATION
I65-111-10610 CD	CONTINUOUS COMPOSITE PRE-STRESSED CONCRETE I-BEAM TYPE II BRIDGE	1 SPAN: 67'-6" SKEW: 00°15'0" LT.	VERMONT STREET	135+24.24 LINE "R_CDS65"

INDIANA DEPARTMENT OF TRANSPORTATION

TRAFFIC DATA	I-65 / I-70 N.B.	I-65 / I-70 S.B.	I-65 / I-70 S.B. CD	VERMONT STREET
A.D.T. (2021)	62,989 V.P.D.	58,288 V.P.D.	18,922 V.P.D.	1519 V.P.D.
A.D.T. (2041)	76,198 V.P.D.	64,063 V.P.D.	18,473 V.P.D.	545 V.P.D.
D.H.V. (2041)	6,553 V.P.H.	5,125 V.P.H.	2,511 V.P.H.	66 V.P.H.
DIRECTIONAL DISTRIBUTION	100 %	100 %	100 %	61 %
TRUCKS	9 % D.H.V.	10 % D.H.V.	5 % D.H.V.	9 % D.H.V.
DESIGN DATA				
DESIGN SPEED	55 M.P.H.	55 M.P.H.	55 M.P.H.	N/A M.P.H.
PROJECT DESIGN CRITERIA	COMPLETE RECONSTRUCTION (FREEWAY)			N/A
FUNCTIONAL CLASSIFICATION	URBAN FREEWAY			PEDESTRIAN
RURAL/URBAN	URBAN (BUILT-UP)			URBAN (BUILT-UP)
TERRAIN	LEVEL			LEVEL
ACCESS CONTROL	FULL			FULL

BRIDGE PLANS

FOR SPANS OVER 20 FEET

ROUTE: I-65 / I-70 S.B. CD AT: RP 111+59

PROJECT NO. 1600808 P.E.
1600808 CONST.

NO ADDITIONAL RIGHT OF WAY REQUIRED FOR THIS PROJECT

BRIDGE REPLACEMENT ON I65 / I70 S.B. CD OVER VERMONT STREET
LOCATED 1.33 MILES NORTH OF I-70 (SOUTH SPLIT) INTERCHANGE
SECTION 1, TOWNSHIP 15 NORTH, RANGE 3 EAST
CENTER TOWNSHIP, MARION COUNTY INDIANA

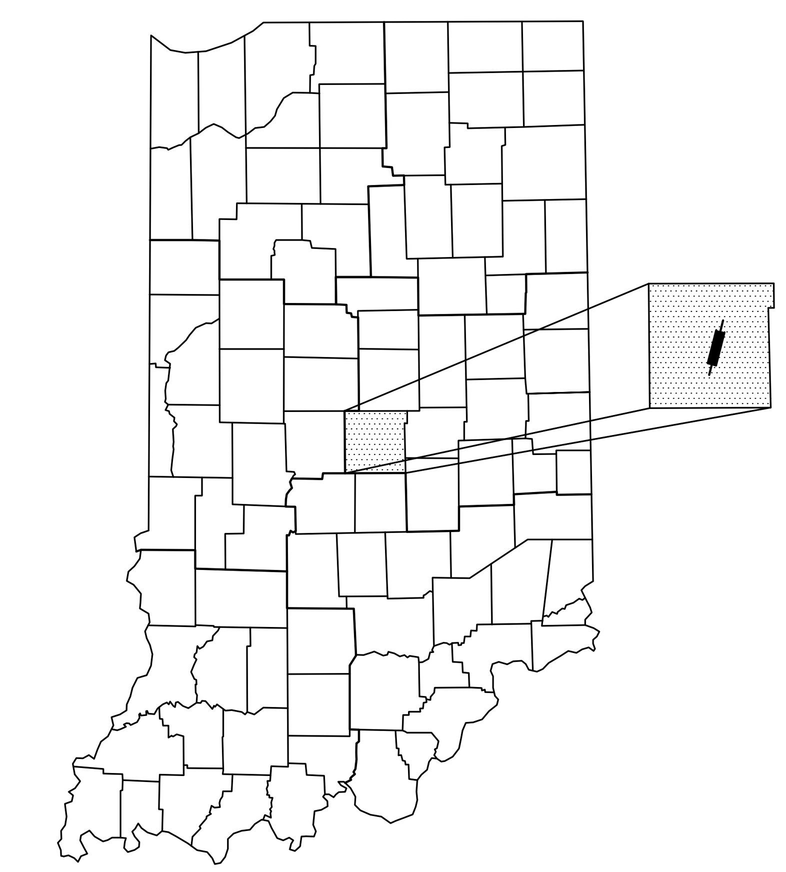

LATITUDE: 39°46'21" N LONGITUDE: 86°08'34" W

BRIDGE LENGTH :	0.013 MI.
ROADWAY LENGTH :	SEE ROAD PLANS
TOTAL LENGTH :	SEE ROAD PLANS
MAX GRADE :	1.52%

HUC: 05120201130020

END PROJECT No. 1600808
STATION 25+75.00 LINE "P_ALG_I65"

END PROJECT No. 1600808
STATION 41+85.70 LINE "P_ALG_I70"

R. 3 E. | R. 4 E.

T. 16 N.
T. 15 N.

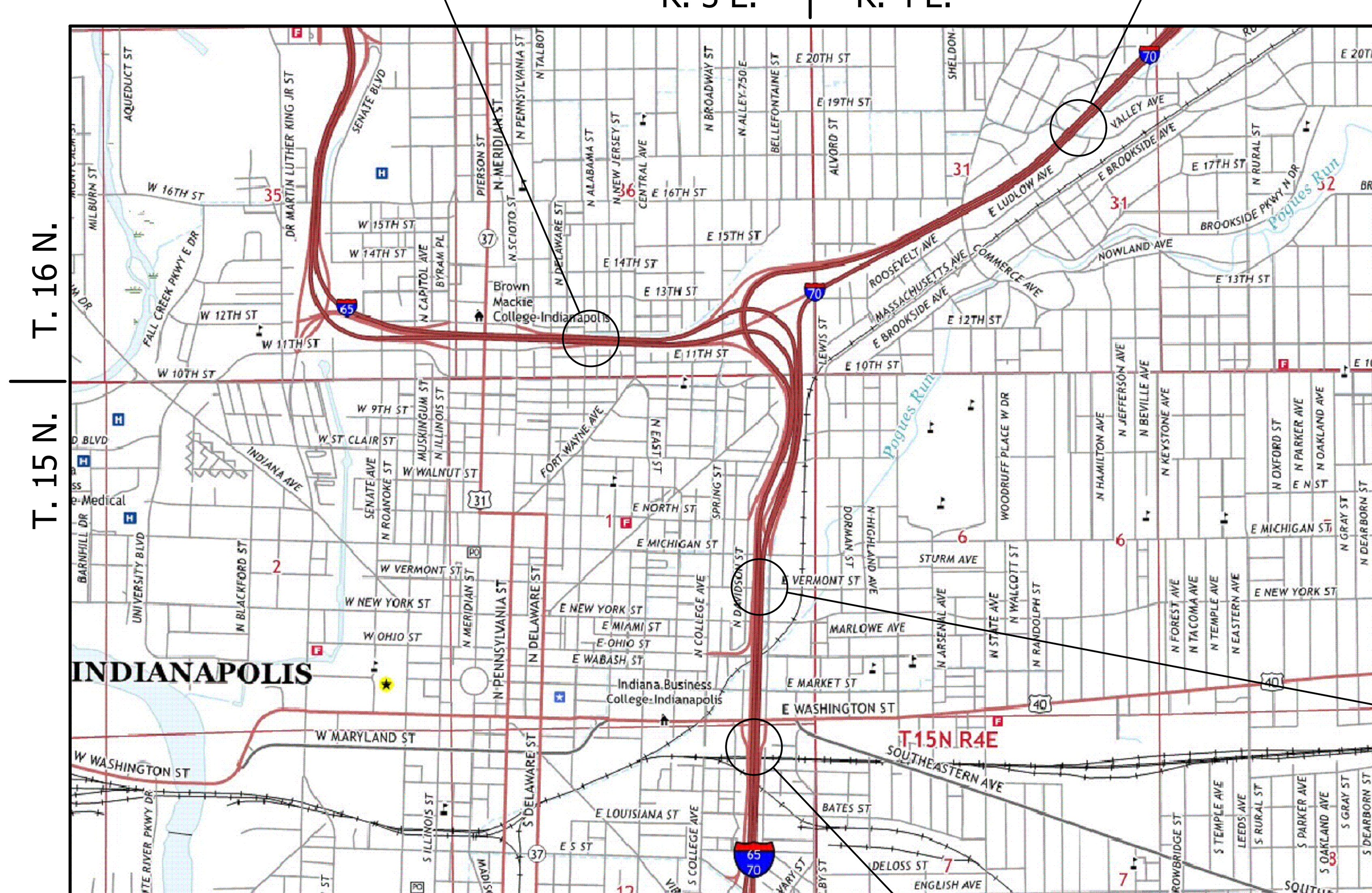

SCALE: 1" = 2000'

PROJECT LOCATION
BRIDGE FILE No. I65-111-10610 CD
I65 / I70 S.B. CD OVER VERMONT STREET
STA. 135+24.24 LINE "R_CDS65"

BEGIN PROJECT No. 1600808
STATION 113+00.00 LINE "P_ALG_I65/I70"

LOCATION MAP
MARION COUNTY

INDIANA DEPARTMENT OF TRANSPORTATION STANDARD SPECIFICATIONS DATED 2020 TO BE USED WITH THESE PLANS.

SUPERIOR CONSTRUCTION

PLANS PREPARED BY: Butler Fairman and Seufert Inc. (317)713-4615 PHONE

CERTIFIED BY: #/#/# DATE

APPROVED FOR LETTING: #/#/# INDIANA DEPARTMENT OF TRANSPORTATION DATE

BRIDGE FILE	
I65-111-10610 CD	
DESIGNATION	
1901861	
SURVEY BOOK	SHEET
ELECTRONIC	1 OF 15
CONTRACT	PROJECT
B-36910	1600808

6412

\\bfsn1241\Jobs5\641200.0000\ProjDevelopment\Design\Drawings\BRIDGES\05 OVER VERMONT STREET\Structure 1901861\1901861_S_BR_TTL01.dwg Dylan Piercefield Plot: 2/24/2020 6:15 AM Save: 2/21/2020 10:51 AM

UTILITIES

REVISIONS

SHEET NO.	DATE	REVISED

KIN PROJECT INFORMATION

DESIGNATION	PROJECT DESCRIPTION	
1600808	COMPLETE ROAD RECONSTRUCTION OF I-65/I-70 FROM WASHINGTON STREET TO I-65 OVER DELAWARE STREET AND I-70 OVER VALLEY AVENUE	LEAD DES
1901935	ITS FOR I-65/I-70 FROM WASHINGTON STREET TO I-65 OVER DELAWARE STREET AND I-70 OVER VALLEY AVENUE	
1901936	SIGNS, LIGHTING, SIGNALS AND MARKING FOR I-65/I-70 FROM WASHINGTON STREET TO I-65 OVER DELAWARE STREET AND I-70 OVER VALLEY AVENUE	
1901847	BRIDGE REPLACEMENT ON I-65/I-70 NB OVER WASHINGTON STREET	
1901848	BRIDGE REPLACEMENT ON I-65/I-70 SB OVER WASHINGTON STREET	
1901849	BRIDGE REPLACEMENT ON I-65/I-70 SB CD OVER WASHINGTON STREET	
1901850	BRIDGE REPLACEMENT ON I-65/I-70 NB OVER MARKET STREET	
1901851	BRIDGE REPLACEMENT ON I-65/I-70 SB OVER MARKET STREET	
1901852	BRIDGE REPLACEMENT ON I-65/I-70 SB CD OVER MARKET STREET	
1901853	BRIDGE REPLACEMENT ON I-65/I-70 NB OVER CSX RAILROAD & OHIO STREET	
1901854	BRIDGE REPLACEMENT ON I-65/I-70 SB OVER CSX RAILROAD & OHIO STREET	
1901855	BRIDGE REPLACEMENT ON I-65/I-70 SB CD OVER CSX RAILROAD & OHIO STREET	
1901856	BRIDGE REPLACEMENT ON I-65/I-70 NB OVER NEW YORK STREET	
1901857	BRIDGE REPLACEMENT ON I-65/I-70 SB OVER NEW YORK STREET	
1901858	BRIDGE REPLACEMENT ON I-65/I-70 SB CD OVER NEW YORK STREET	
1901861	BRIDGE REPLACEMENT ON I-65/I-70 SB CD OVER VERMONT STREET	
1901862	BRIDGE REPLACEMENT ON I-65 NB & I-70 EB OVER MICHIGAN STREET	
1901863	BRIDGE REPLACEMENT ON I-65 SB/I-70 WB OVER MICHIGAN STREET	
1901864	BRIDGE REPLACEMENT ON I-65/I-70 SB CD OVER MICHIGAN STREET	
1901865	BRIDGE REPLACEMENT ON I-65 NB OVER I-70 EB ENTRANCE RAMP	
1901881	BRIDGE REPLACEMENT ON I-65 NB OVER ST. CLAIR STREET	
1901889	NEW BRIDGE CONSTRUCTION ON I-70 EB OVER ST. CLAIR STREET	
1901892	BRIDGE REPLACEMENT ON I-65 SB/I-70 WB OVER ST. CLAIR STREET	
1901896	NEW BRIDGE CONSTRUCTION ON SB CD OVER ST. CLAIR STREET	
1901897	BRIDGE REPLACEMENT ON I-65 NB OVER EAST 10TH STREET	
1901899	NEW BRIDGE CONSTRUCTION ON I-70 EB OVER EAST 10TH STREET	
1901901	BRIDGE REPLACEMENT ON I-65 SB OVER EAST 10TH STREET	
1901903	BRIDGE REPLACEMENT ON I-70 WB OVER EAST 10TH STREET	
1901905	NEW BRIDGE CONSTRUCTION ON SB CD & RAMP OVER EAST 10TH STREET	
1901906	NEW BRIDGE CONSTRUCTION ON I-65 NB CD EXIT RAMP OVER CENTRAL AVENUE	
1901907	BRIDGE REPLACEMENT ON I-65 NB OVER CENTRAL AVENUE	
1901908	BRIDGE REPLACEMENT ON I-65 SB OVER CENTRAL AVENUE	
1901909	NEW BRIDGE CONSTRUCTION ON I-65 SB CD ENTRANCE RAMP OVER CENTRAL AVE.	
1901914	BRIDGE REPLACEMENT ON I-70 WB TO I-65 NB OVER COLLEGE AVENUE	
1901915	BRIDGE REPLACEMENT ON I-65 NB & PENNSYLVANIA EXIT RAMP OVER COLLEGE AVENUE	
1901917	BRIDGE REPLACEMENT ON I-65 SB & SB CD RAMP OVER COLLEGE AVENUE	
1901918	BRIDGE REPLACEMENT ON I-65 SB & DELAWARE ENTRANCE RAMP TO I-70 EB OVER COLLEGE AVENUE & FIVE RAMPS	
1901919	BRIDGE REPLACEMENT ON I-65 NB OVER I-70 WB & RAMP	
1901920	BRIDGE REPLACEMENT ON I-70 WB TO I-65 NB OVER THREE RAMPS	
1901921	BRIDGE REPLACEMENT ON I-65 SB OVER I-70 WB & SB CD RAMP	
1901922	NEW BRIDGE CONSTRUCTION ON I-70 EB OVER I-65 NB	
1901923	BRIDGE REPLACEMENT ON I-70 WB & SB CD OVER LEWIS STREET & MONON TRAIL	
1901925	NEW BRIDGE CONSTRUCTION ON I-70 WB TO I-65 NB OVER LEWIS STREET & MONON TRAIL	
1901927	NOT USED	
1901928	BRIDGE REPLACEMENT ON I-70 EB OVER LEWIS STREET & MONON TRAIL	
1901929	PREVENTATIVE MAINTENANCE ON I-70 WB OVER ROOSEVELT AT COMMERCE AVENUE	
1901930	PREVENTATIVE MAINTENANCE ON I-70 EB OVER ROOSEVELT AT COMMERCE AVENUE	
1901931	PREVENTATIVE MAINTENANCE ON I-70 WB OVER VALLEY AVENUE	
1901932	PREVENTATIVE MAINTENANCE ON I-70 EB OVER VALLEY AVENUE	
1901933	REHABILITATE AND WIDEN ON I-65 OVER 7 STREETS, ACCESS RD, MONORAIL (AKA "MONSTER BRIDGE") - PENNSYLVANIA EXIT RAMP	
1901934	REHABILITATE AND WIDEN ON I-65 OVER 7 STREETS, ACCESS RD, MONORAIL (AKA "MONSTER BRIDGE") - DELAWARE ENTRANCE RAMP	
1902179	BRIDGE REPLACEMENT ON I-65 NB/I70 EB OVER VERMONT STREET	
1902180	BRIDGE REPLACEMENT ON I-65 SB/I70 WB OVER VERMONT STREET	

INDEX

SHEET NO.	DESIGNATION
1	TITLE
2	INDEX
3	MAINTENANCE OF TRAFFIC
4	LAYOUT
5	GENERAL PLAN - PLAN & ELEVATION VIEWS
6	GENERAL PLAN - TYPICAL SECTION
7	BENT NO. 1 DETAILS
8	BENT NO. 2 DETAILS
9	BENTS NO. 1 AND NO. 2 DETAILS
10	FRAMING PLAN
11	BEAM DETAILS
12	FLOOR DETAILS
13	APPROACH SLAB
14	WALL LAYOUT
15	WALL LAYOUT

RECOMMENDED FOR APPROVAL: _____ DESIGN ENGINEER #/#/# DATE

DESIGNED: B. WRIGHT DRAWN: L. KIRSCH

CHECKED: V. SATHIRAJU CHECKED: B. WRIGHT

INDIANA
DEPARTMENT OF TRANSPORTATION

INDEX

HORIZONTAL SCALE	BRIDGE FILE
N/A	I65-111-10610 CD
VERTICAL SCALE	DESIGNATION
N/A	1901861
SURVEY BOOK	SHEET
ELECTRONIC	2 OF 15
CONTRACT	PROJECT
B-36910	1600808

BPS NO. 6412

\\bfsn1241\Jobs5\641200.0000\ProjDevelopment\Design\Drawings\BRIDGES\05 OVER VERMONT STREET\Structure 1901861\901861_S_BR_IN001.dwg Dylon Piercefield Plot:2/24/2020 6:15 AM Save:2/7/2020 7:32 AM

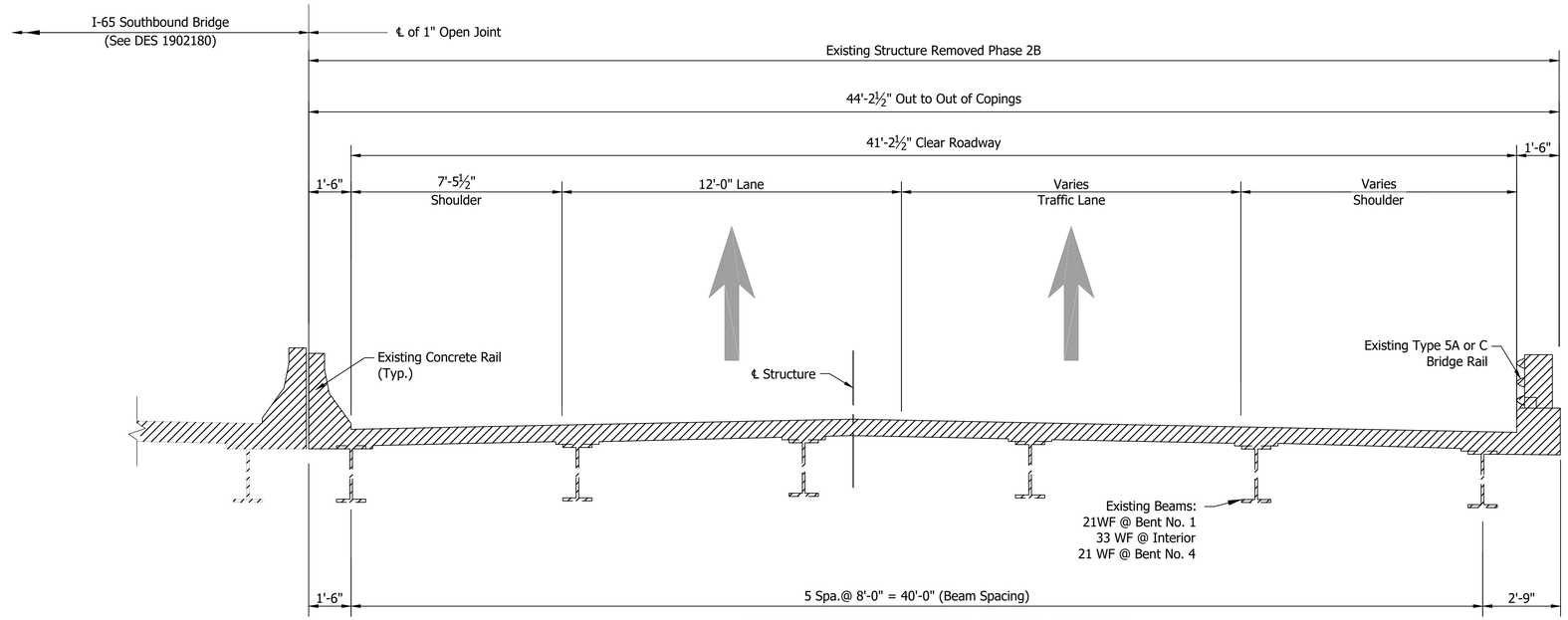

EXISTING SOUTHBOUND CD TYPICAL SECTION

Scale: 3/8"=1'-0"

LEGEND

Limits of Removal

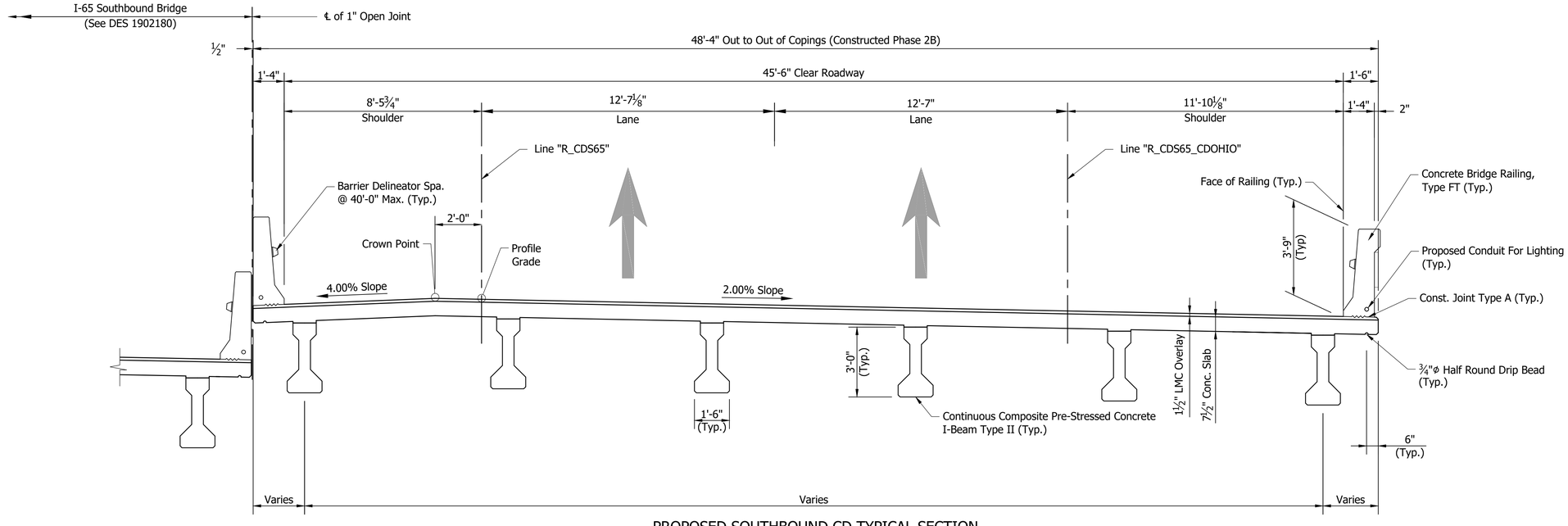

PROPOSED SOUTHBOUND CD TYPICAL SECTION

Scale: 3/8"=1'-0"

Note:
All Measurements Taken Along ℄ of Bent

RECOMMENDED FOR APPROVAL: DESIGN ENGINEER DATE	INDIANA DEPARTMENT OF TRANSPORTATION	HORIZONTAL SCALE: As Noted	BRIDGE FILE: I65-111-10610 CD	
		VERTICAL SCALE: N/A	DESIGNATION: 1901861	
DESIGNED: V. SATHIRAJU DRAWN: D. PIERCEFIELD	MAINTENANCE OF TRAFFIC	SURVEY BOOK: ELECTRONIC	SHEET: 3 OF 15	
CHECKED: B. WRIGHT CHECKED: B. WRIGHT		CONTRACT: B-36910	PROJECT: 1600808	

BFS NO. 6412

\\bfsrt241\Jobs5\641200.0000\Proj\Development\Design\Drawings\BRIDGES\05 OVER VERMONT STREET\Structure 1901861\1901861_S_BR_MOT01.dwg Dylan Piercefield Plot:2/24/2020 6:16 AM Save:2/18/2020 9:31 AM

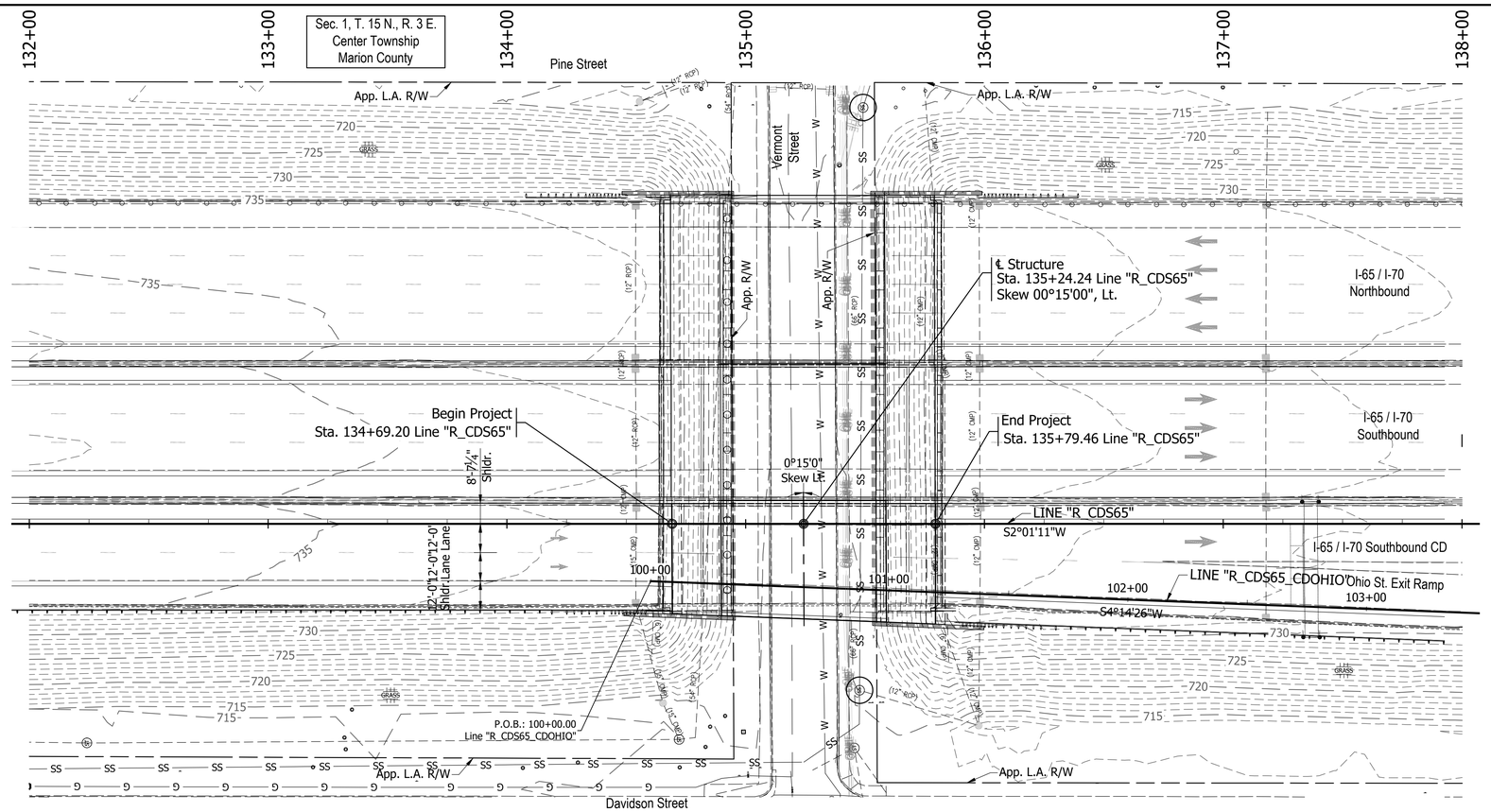

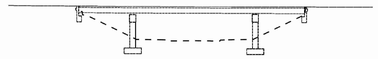

EXISTING STRUCTURE

The existing structure was built in 1974. Structure was rehabilitated in 2003 & 2013 and had emergency repairs in October 2013. The structure is a 3-span continuous composite 33" WF steel beam.

Span lengths: 1 @ 25'-0", 1 @ 64'-0", 1 @ 27'-6"

Clear roadway 41'-2½". Total length of 117'-8 5/8"

Existing structure to be removed.

Existing plans are on file with the Indiana Department of Transportation under Bridge File No. I-65-112-5731, I-65-112-5731A and I-65-112-5731B.

EARTHWORK TABULATION

See Roadway Plans (DES #_____) for earthwork tabulation.

NOTE: ALL TOPOGRAPHY INFORMATION REFERENCED TO LINE "R_CDS65" UNLESS NOTED.

ALL R/W ON THIS SHEET DESCRIBED FROM LINE "R_CDS65" UNLESS OTHERWISE NOTED

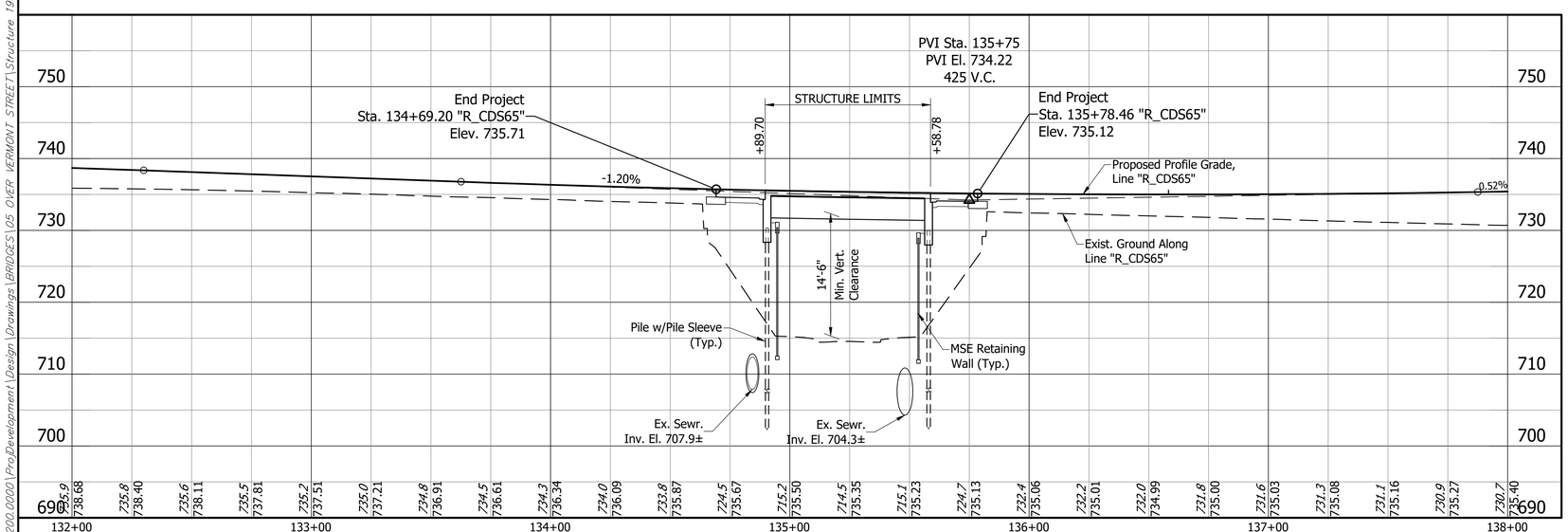

Notes:

1. For R/W and property information, see Location Control Route Survey (DES # _____).
2. For alignment data, see Geometric Layout Sheets (DES #_____).
3. See Road Plans (DES #_____) for Horizontal & Vertical Control Data.°

CONTINUOUS COMPOSITE PRE-STRESSED
CONCRETE I-BEAM TYPE II BRIDGE
1 SPAN: 67'-6"
VARIES 45'-6" TO 48'-1 3/8" CLEAR ROADWAY
SKEW: 00°15'0" LT.
I-65 / I-70 S.B. CD OVER VERMONT STREET
MARION COUNTY

RECOMMENDED FOR APPROVAL: _____ DESIGN ENGINEER #/#/# DATE

DESIGNED: B. WRIGHT DRAWN: L. KIRSCH
CHECKED: M. EICHENAUER CHECKED: B. WRIGHT

INDIANA
DEPARTMENT OF TRANSPORTATION

LAYOUT

HORIZONTAL SCALE	BRIDGE FILE
1" = 30'	I65-111-10610 CD
VERTICAL SCALE	DESIGNATION
1" = 10'	1901861
SURVEY BOOK	SHEET
ELECTRONIC	4 OF 15
CONTRACT	PROJECT
B-36910	1600808

BFS NO. 6412

\\bfs\c241\Jobs5\641200.0000\Pro\Development\Design\Drawings\BRIDGES\05 OVER VERMONT STREET\Structure 1901861\1901861_S_BR_LAY01.dwg Dylon Piercefield Plot: 2/24/2020 6:16 AM Save: 2/18/2020 12:44 PM

STRUCTURE TO BE BUILT ON A 425' VERTICAL CURVE

PVI Sta. 135+75
PVI El. 734.22
425 V.C.

-1.20% +0.52%

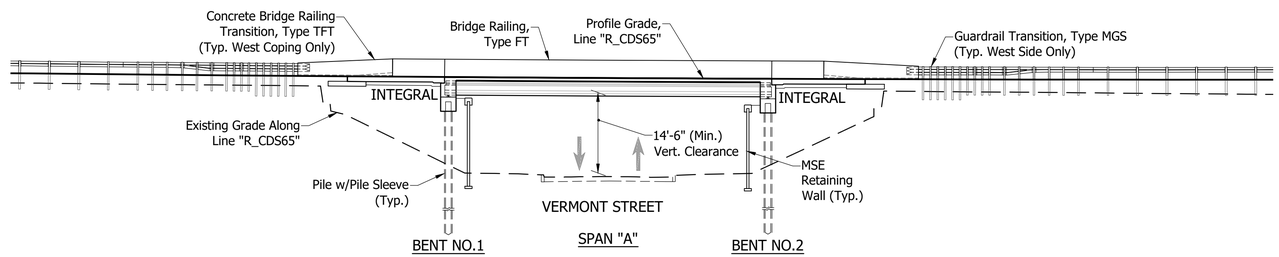

ELEVATION

Scale: 1/16" = 1'-0"

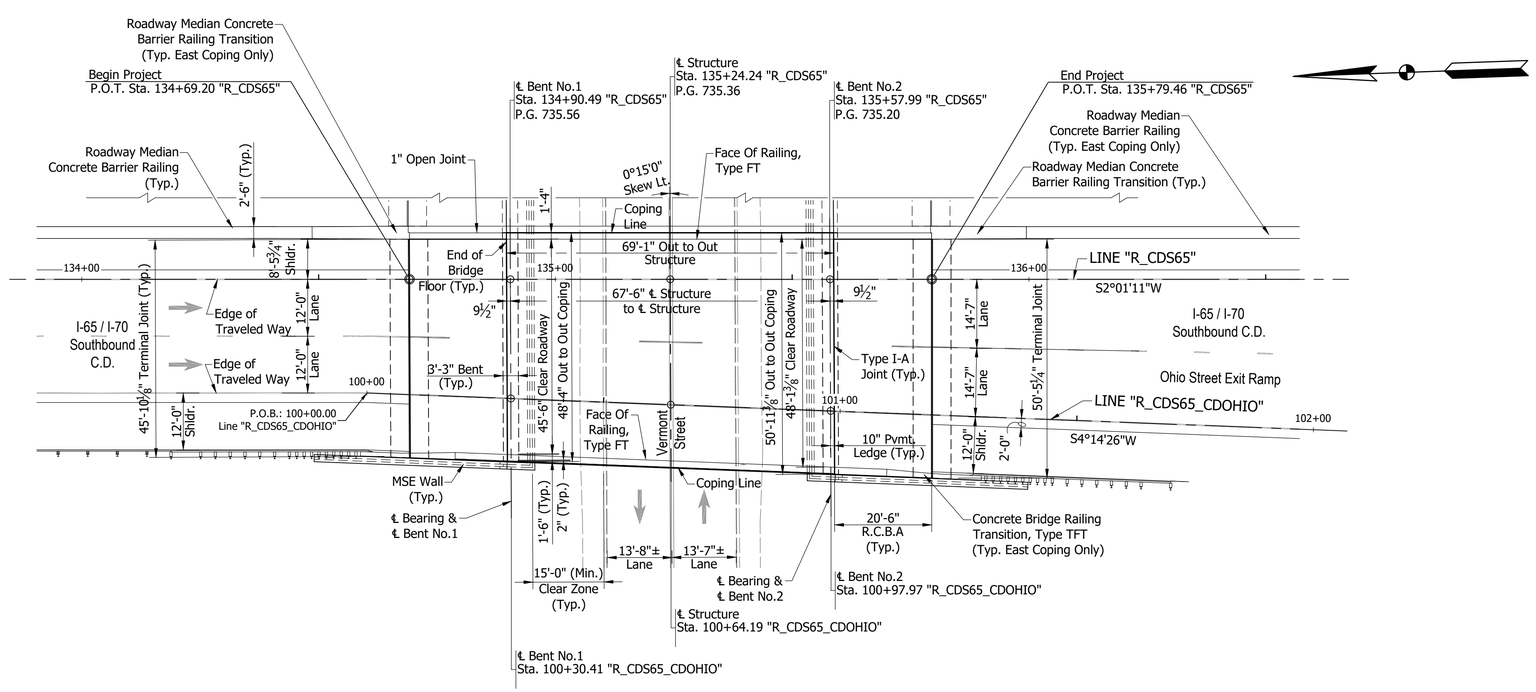

PLAN

Scale: 1/16" = 1'-0"

NOTE:
See Sheet 6 For Typical Section

CONTINUOUS COMPOSITE PRE-STRESSED CONCRETE
I-BEAM TYPE II BRIDGE
1 SPAN: 67'-6"
VARIES 45'-6" TO 48'-1 3/8" CLEAR ROADWAY SKEW:
00°15'0" LT.
I-65 / I-70 S.B. CD OVER VERMONT STREET
MARION COUNTY

RECOMMENDED FOR APPROVAL: _____ DESIGN ENGINEER _____ DATE

DESIGNED: V. SATHIRAJU DRAWN: L. KIRSCH
CHECKED: B. WRIGHT CHECKED: B. WRIGHT

INDIANA
DEPARTMENT OF TRANSPORTATION

GENERAL PLAN - PLAN & ELEVATION VIEWS

HORIZONTAL SCALE	BRIDGE FILE
As Noted	I65-111-10610 CD
VERTICAL SCALE	DESIGNATION
N/A	1901861
SURVEY BOOK	SHEET
ELECTRONIC	5 OF 15
CONTRACT	PROJECT
B-36910	1600808

BFS NO. 6412

\\bfsnt241\Jobs5\641200.0000\ProjDevelopment\Design\Drawings\BRIDGES\05 OVER VERMONT STREET\Structure 1901861\1901861_S_BR_PLN01.dwg Dylan Piercefield Plot: 2/24/2020 6:16 AM Save: 2/18/2020 12:47 PM

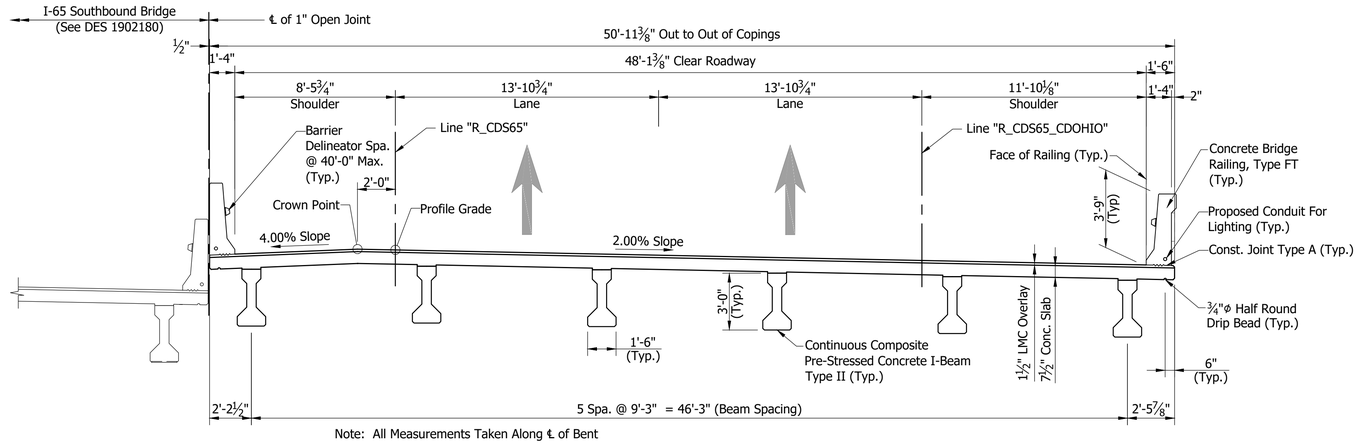

Note: All Measurements Taken Along ℄ of Bent

TYPICAL SECTION - WIDE SIDE

Scale: 1/4"= 1'-0"

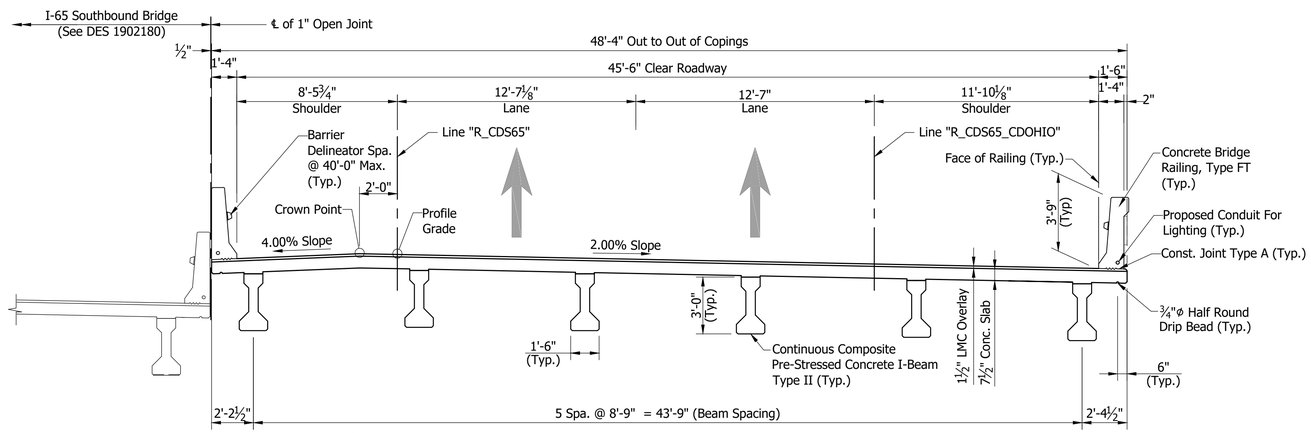

Note:
All Measurements Taken Along ℄ of Bent

TYPICAL SECTION - NARROW SIDE

Scale: 1/4"= 1'-0"

GENERAL NOTES

Reinforcing bars covering shall be 3 ½" in top and 1" min. in bottom of floor slabs and 3" in footings except bottom steel which shall be 4", and 2" in all other parts, unless noted.

Concrete in floor slab, and diaphragms, barriers, and end bents shall be an alternate Class C in accordance with the Technical Provisions.

Reinforcing Bars in Deck, Barrier, and End Bent Diaphragm Extending into the Deck shall be Stainless Steel. Reinforcing Bars in End Bent Diaphragm not Extending into the Deck and in the Cap shall be Epoxy Coated.

All exposed faces of the MSE walls and reinforced concrete bridge approach slabs shall receive surface seal.

See Bridge Aesthetic Plan for Architectural Details.

DESIGN DATA

LIVE LOAD:

Superstructure and Substructure Designed for HL-93 loading in accordance with the AASHTO LRFD Bridge Design Specifications, 8th Edition, 2017 and its subsequent revisions.

DEAD LOAD:

Designed for Actual Dead Load plus 35 psf of future wearing surface, and 15 psf for SIP Metal Deck Forms.

FLOOR SLAB:

Slab designed with a 7 ½" structural depth and a 1 ½" very early strength LMC wearing surface.

CONSTRUCTION LOADING:

The exterior girder has been checked for strength, deflection, and overturning using the construction loads shown below. Cantilever overhang brackets were assumed for support of the deck overhang past the edge of the exterior beam. The finishing machine was assumed to be supported 6 in. outside the vertical coping form. The top overhang brackets were assumed to be located 6 in. past the edge of the vertical coping form. The bottom overhang brackets were assumed to be braced against the intersection of the girder bottom flange and web.

DECK FALSEWORK LOADS:

Designed for 15 psf for permanent metal stay-in-place deck forms, removable deck forms, and 2 ft. exterior walkway.

DESIGN STRESSES

CONSTRUCTION LIVE LOAD:

Designed for 20 psf extending 2 ft. past the edge of coping and 75 lb/ft vertical force applied at a distance of 6 in. outside the face of coping over a 30 foot length of the deck centered with the finishing machine.

FINISHING-MACHINE LOAD:

4500 lb distributed over 10 ft. along the coping.

WIND LOAD:

Designed for 70 mph horizontal wind load in accordance with LRFD 3.8.1.

ULTIMATE DESIGN STRENGTHS:

Class "A" Concrete	f'c = 3,500 p.s.i.
Class "B" Concrete	f'c = 3,000 p.s.i.
Class "C" Concrete	f'c = 4,000 p.s.i.
Reinforcing Steel (Grade 60)	Fy = 60,000 p.s.i. (barrier)
	Fy = 75,000 p.s.i. (deck)
	Fy = 75,000 p.s.i. (all other locations)

SEISMIC DESIGN DATA:

Seismic Site Class	C
PGA (g)	0.051
S_s (g)	0.12
S_1 (g)	0.051
S_{D1} (g)	0.086
Seismic Design Category	A

CONTINUOUS COMPOSITE PRE-STRESSED CONCRETE I-BEAM TYPE II BRIDGE
1 SPAN: 67'-6"
VARIES 45'-6" TO 48'-1 3/8" CLEAR ROADWAY SKEW: 00°15'0" LT.
I-65 / I-70 S.B. CD OVER VERMONT STREET
MARION COUNTY

RECOMMENDED FOR APPROVAL: _____ DESIGN ENGINEER #/#/# DATE

DESIGNED: V. SATHIRAJU DRAWN: L. KIRSCH
CHECKED: B. WRIGHT CHECKED: B. WRIGHT

INDIANA
DEPARTMENT OF TRANSPORTATION

GENERAL PLAN - TYPICAL SECTION

HORIZONTAL SCALE	BRIDGE FILE
As Noted	I65-111-10610 CD
VERTICAL SCALE	DESIGNATION
N/A	1901861
SURVEY BOOK	SHEET
ELECTRONIC	6 OF 15
CONTRACT	PROJECT
B-36910	1600808

BFS NO. 6412

\\bfs\t241\Jobs5\641200.0000\Pro\Development\Design\Drawings\BRIDGES\05 OVER VERMONT STREET\Structure 1901861\1901861_S_BR_PLN02.dwg Dylan Piercefield Plot: 2/24/2020 6:16 AM Save: 2/20/2020 4:05 PM

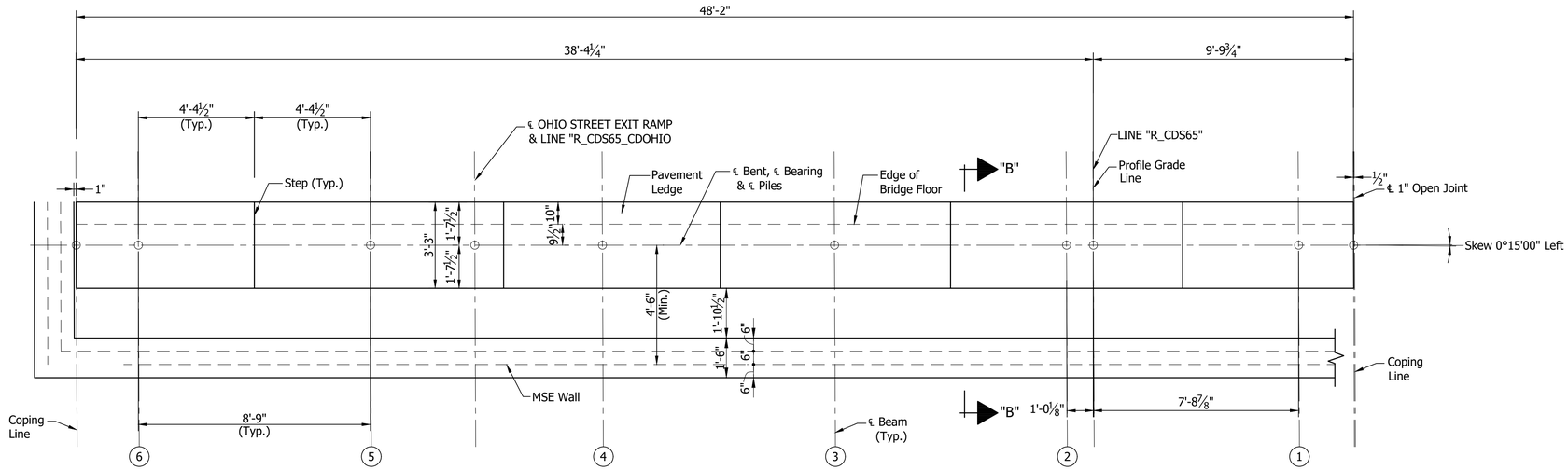

PLAN
BENT NO.1 SB CD

Scale: ⅜"=1'-0"

SEAT ELEVATIONS						
Beam No.	6	5	4	3	2	1
Bent No.1	728.46	728.64	728.81	728.99	729.16	728.99

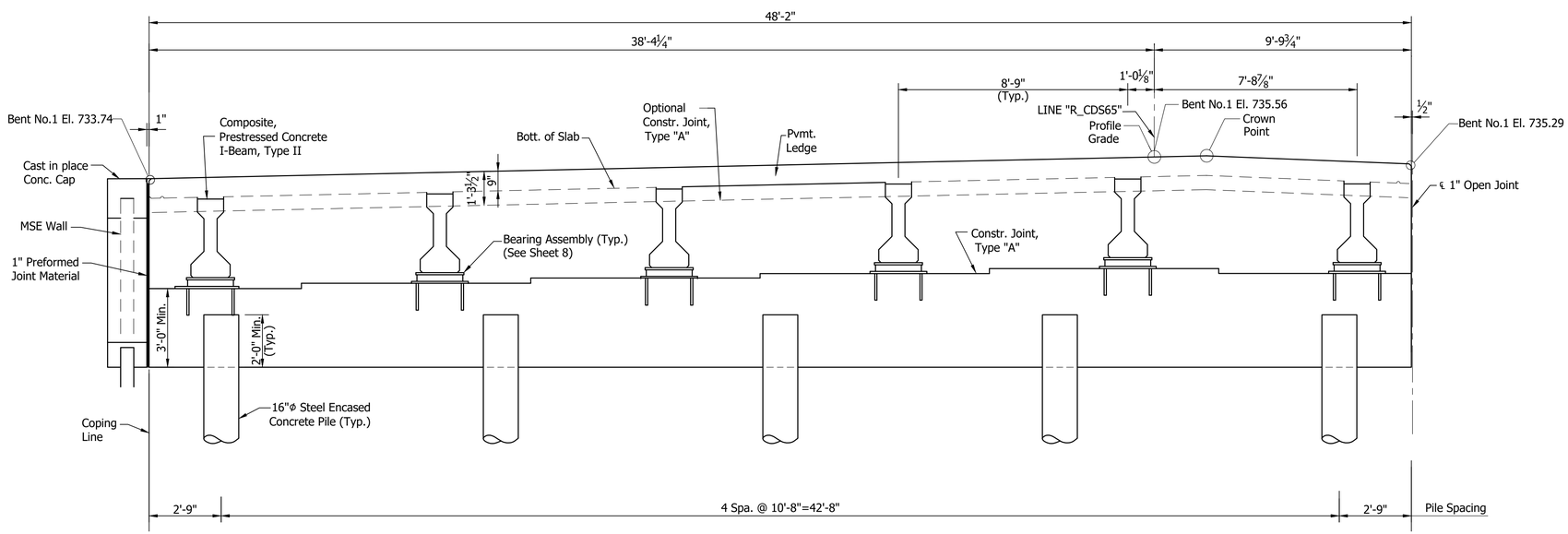

SECTION ALONG ℄ BENT

Scale: ⅜"=1'-0"

RECOMMENDED FOR APPROVAL: _____ DESIGN ENGINEER #/#/# DATE

DESIGNED: V. SATHIRAJU DRAWN: K. COFFMAN

CHECKED: B. WRIGHT CHECKED: B. WRIGHT

INDIANA
DEPARTMENT OF TRANSPORTATION

BENT NO. 1 DETAILS

HORIZONTAL SCALE	BRIDGE FILE
As Noted	I65-111-10610 CD
VERTICAL SCALE	DESIGNATION
N/A	1901861
SURVEY BOOK	SHEET
ELECTRONIC	7 OF 15
CONTRACT	PROJECT
B-36910	1600808

6412

BFS NO.

\\bfs\241\jobs5\641200.0000\Proj\Development\Design\Drawings\BRIDGES\05 OVER VERMONT STREET\Structure 1901861\1901861_S_BR_BNT01.dwg Dylon Piercefield Plot:2/24/2020 1:27 PM Save:1/17/2020 10:06 AM

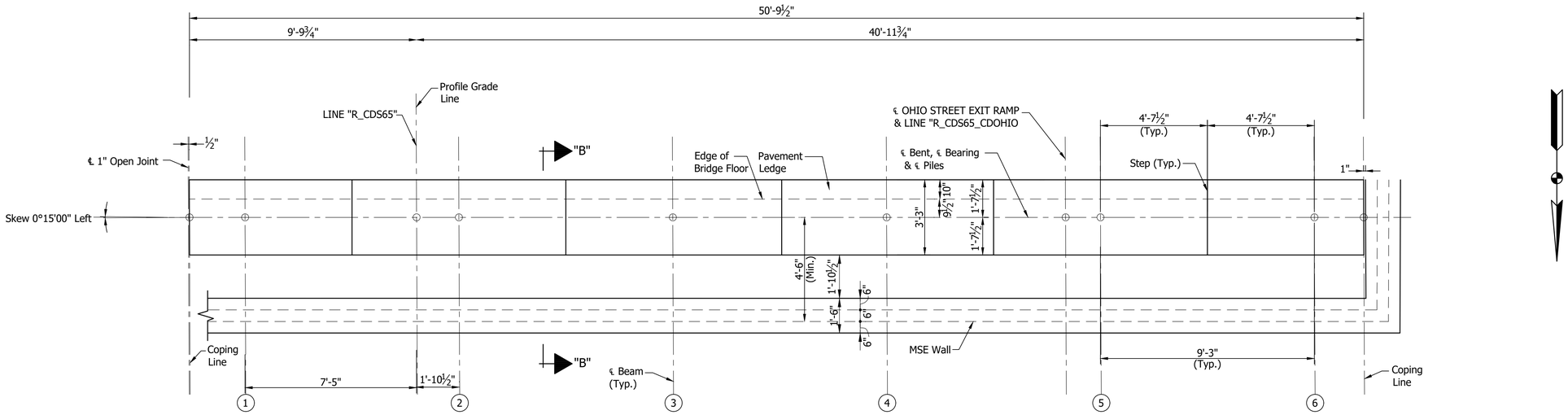

PLAN
BENT NO.2 SB CD

Scale: ⅜"=1'-0"

SEAT ELEVATIONS						
Beam No.	1	2	3	4	5	6
Bent No.2	729.58	729.72	729.53	729.35	729.17	728.98

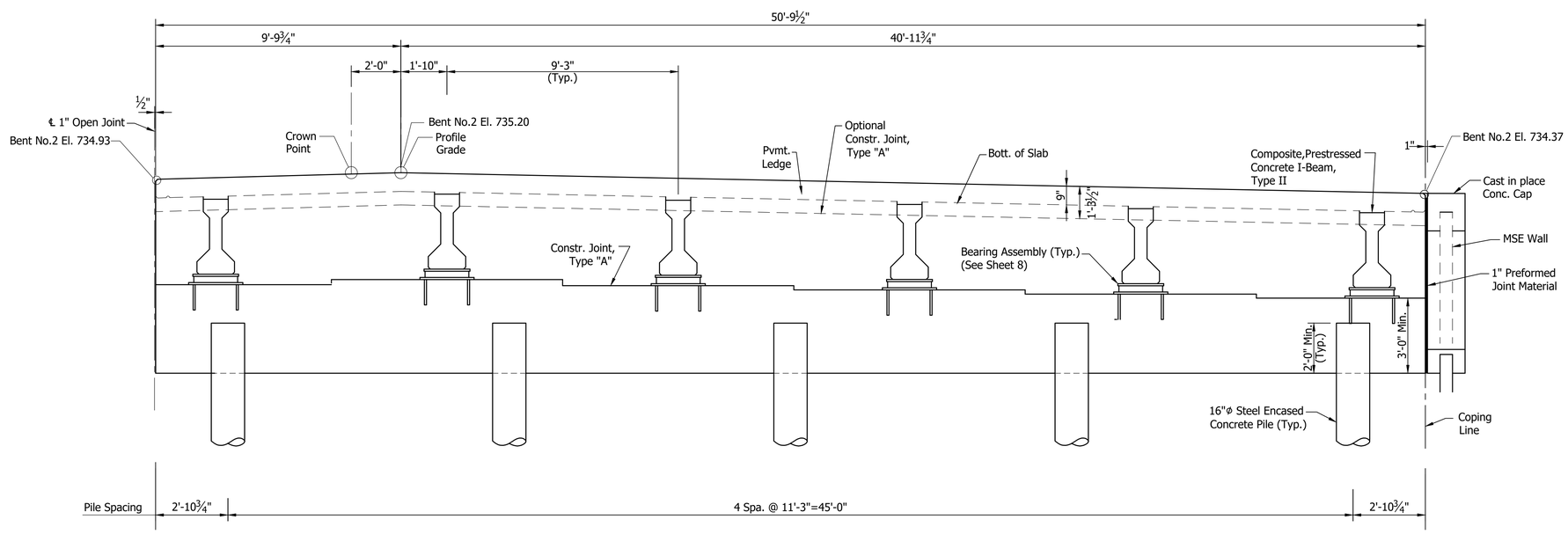

SECTION ALONG ℄ BENT

Scale: ⅜"=1'-0"

RECOMMENDED FOR APPROVAL: DESIGN ENGINEER	#/#/# DATE	INDIANA DEPARTMENT OF TRANSPORTATION	HORIZONTAL SCALE: As Noted; BRIDGE FILE: I65-111-10610 CD; VERTICAL SCALE: N/A; DESIGNATION: 1901861
DESIGNED: V. SATHIRAJU	DRAWN: K. COFFMAN	BENT NO. 2 DETAILS	SURVEY BOOK; ELECTRONIC; SHEET 8 OF 15; CONTRACT: B-36910; PROJECT: 1600808
CHECKED: B. WRIGHT	CHECKED: B. WRIGHT		

BFS NO. 6412

\\bfsn1241\Jobs5\641200.0000\ProjDevelopment\Design\Drawings\BRIDGES\05 OVER VERMONT STREET\Structure 1901861\1901861_S_BR_BNT02.dwg Dylan Piercefield Plot:2/24/2020 1:27 PM Save:2/24/2020 1:27 PM

⊛ As an alternate a 7/8"ϕx1'-3" Long Headed Automatic Welded Stud may be used.

⊗ Setting Tolerance of Bottom Plate-Level with to not more than 1/16" below top of Concrete.

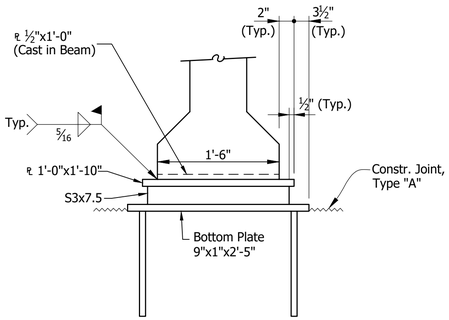

ELEVATION

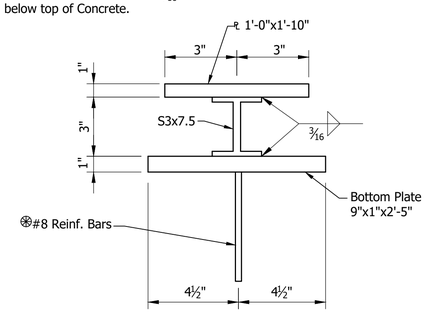

SECTION

BEARING ASSEMBLY

Not to Scale

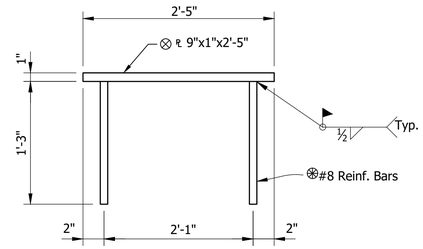

BOTTOM PLATE DETAIL

Not to Scale

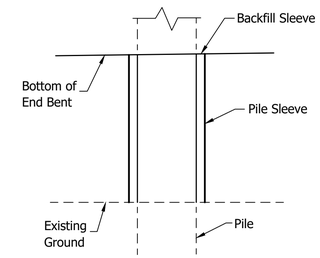

PILE SLEEVE DETAIL

Not to Scale

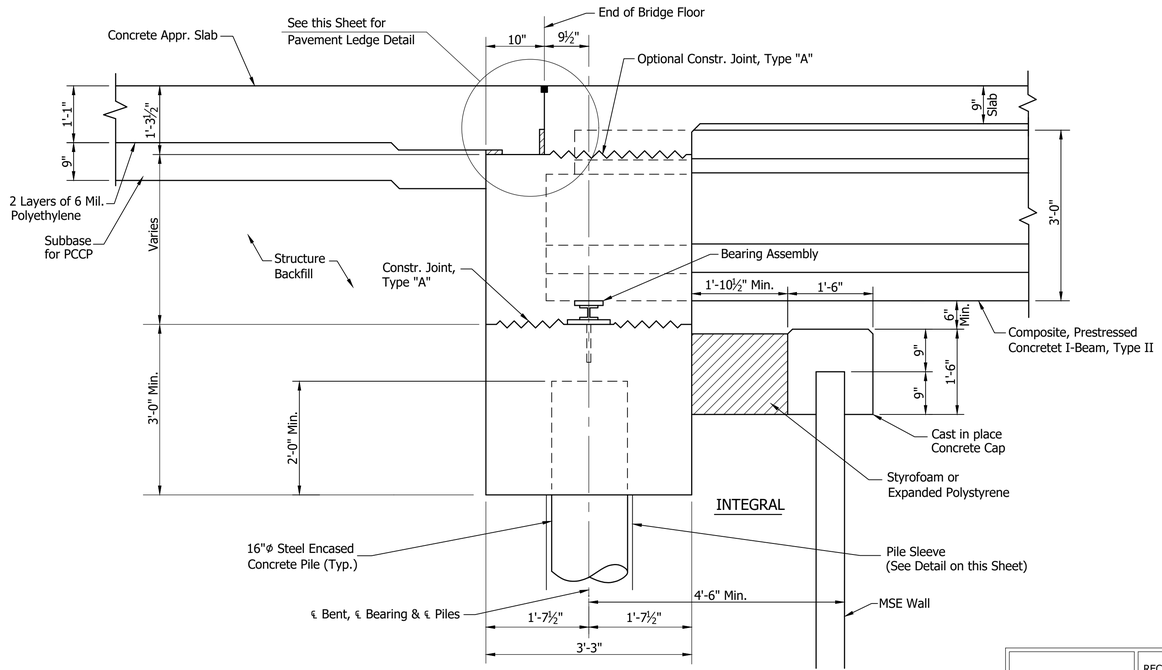

SECTION "B-B"

Not to Scale

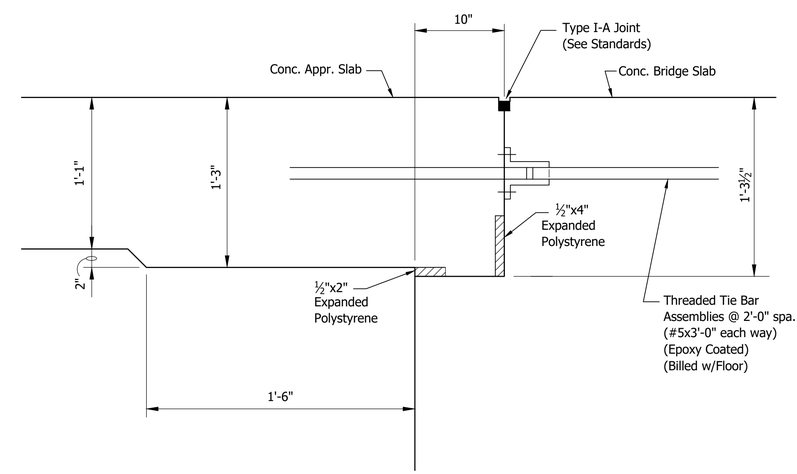

PAVEMENT LEDGE DETAIL

Not to Scale

RECOMMENDED FOR APPROVAL: DESIGN ENGINEER DATE	INDIANA DEPARTMENT OF TRANSPORTATION	HORIZONTAL SCALE: As Noted	BRIDGE FILE: I65-111-10610 CD
		VERTICAL SCALE: N/A	DESIGNATION: 1901861
DESIGNED: V. SATHIRAJU DRAWN: K.COFFMAN	BENTS NO. 1 AND NO. 2 DETAILS	SURVEY BOOK: ELECTRONIC	SHEET: 9 OF 15
CHECKED: B. WRIGHT CHECKED: B. WRIGHT		CONTRACT: B-36910	PROJECT: 1600808

BFS NO. 6412

\\bfsn1241\jobs5\641200.0000\ProjDevelopment\Design\Drawings\BRIDGES\05 OVER VERMONT STREET\Structure 1901861\1901861_S_BR_BNT03 - BENT DETAIL.dwg Dylan Piercefield Plot:2/24/2020 6:17 AM Save:1/22/2020 9:53 AM

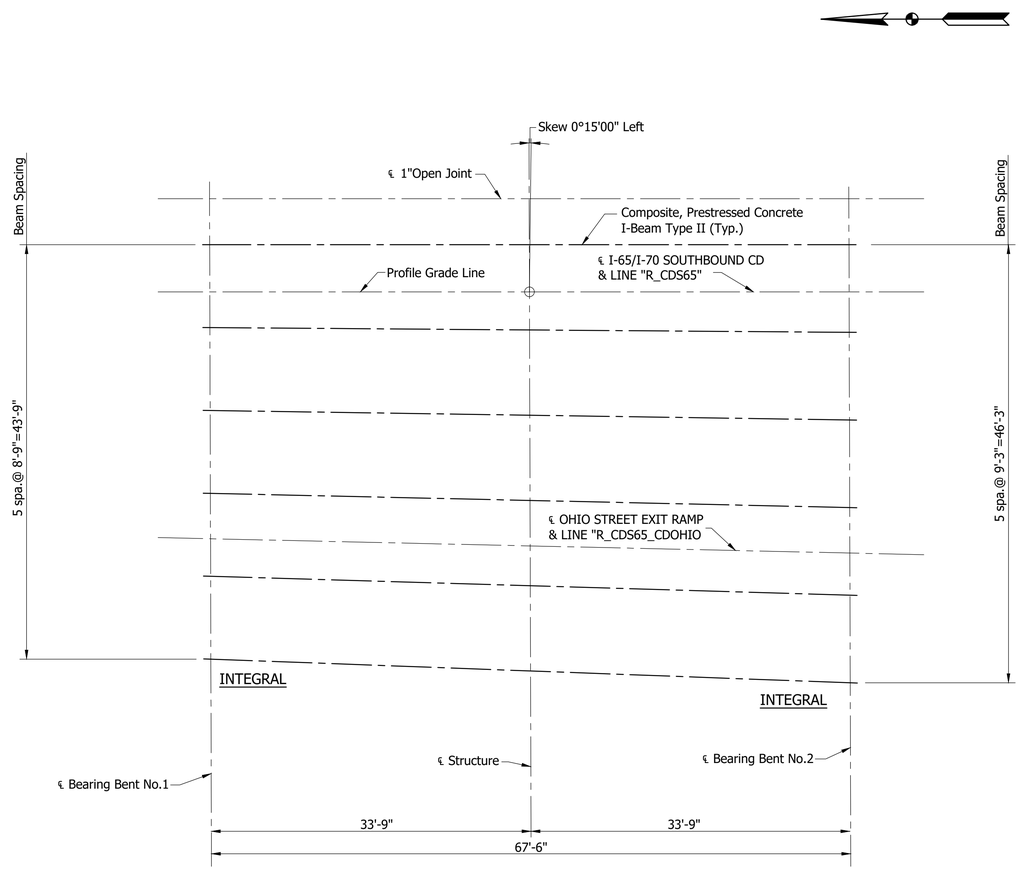

BEAM ERECTION PLAN

Scale: 1/8" = 1'-0"

RECOMMENDED FOR APPROVAL: DESIGN ENGINEER DATE	INDIANA DEPARTMENT OF TRANSPORTATION	HORIZONTAL SCALE: As Noted	BRIDGE FILE: I65-111-10610 CD	6412
		VERTICAL SCALE: N/A	DESIGNATION: 1901861	
DESIGNED: V. SATHIRAJU DRAWN: D. SHEETZ	FRAMING PLAN	SURVEY BOOK: ELECTRONIC	SHEET: 10 OF 15	BFS NO.
CHECKED: B. WRIGHT CHECKED: B. WRIGHT		CONTRACT: B-36910	PROJECT: 1600808	

\\bfsn1241\jobs5\641200.0000\Proj\Development\Design\Drawings\BRIDGES\05 OVER VERMONT STREET\Structure 1901861\1901861_S_BR_FRM01.dwg Dylon Piercefield Plot:2/24/2020 6:17 AM Save:2/18/2020 9:41 AM

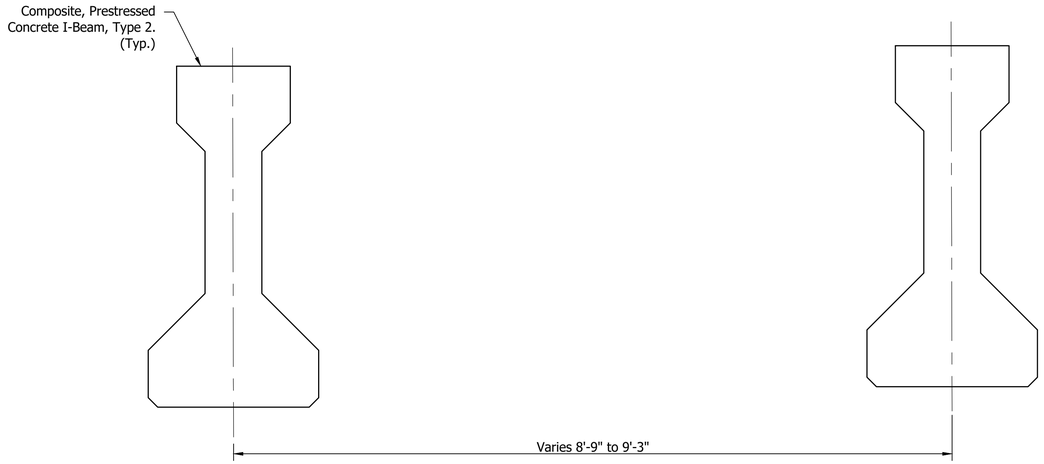

ELEVATION
Scale: 1-1/2" = 1'-0"

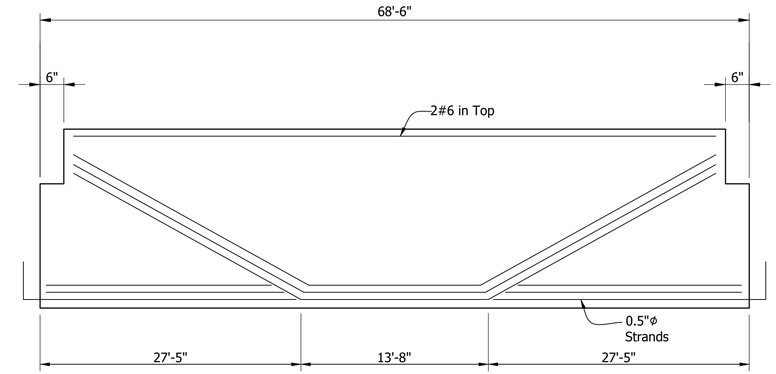

BEAM ELEVATION
SPAN "A" (SHOWN)
SHOWING DRAPED STRANDS
Not to Scale

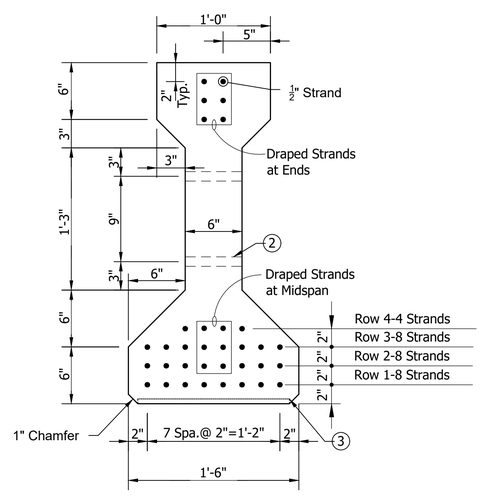

SECTION SHOWING STRANDS (SPAN A)

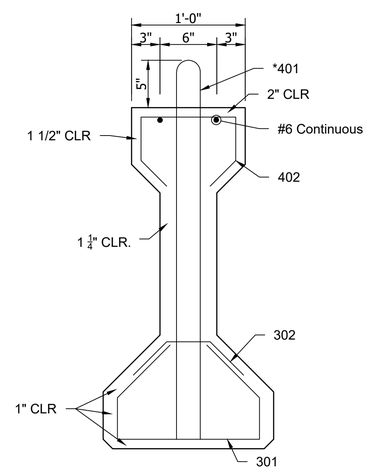

SECTION SHOWING REINFORCING

✳ Denotes Epoxy Coated

Note:
Bars 1" Clear
unless noted.

1. Surface Seal req'd on top of all Beams and Exterior Face of Exterior Beams
2. 1" Ø Holes or ¾"Ø Inserts for Dowels at Bent or Pier. (See Beam Plans)
3. ℄ ½"x12"x1'-4" at End Bent Ends only

BEAM SECTIONS
Scale: 1-1/2" = 1'-0"

RECOMMENDED FOR APPROVAL: DESIGN ENGINEER ##/##/## DATE	INDIANA DEPARTMENT OF TRANSPORTATION	HORIZONTAL SCALE: As Noted	BRIDGE FILE: I65-111-10610 CD	
		VERTICAL SCALE: N/A	DESIGNATION: 1901861	
DESIGNED: V. SATHIRAJU DRAWN: K. COFFMAN	BEAM DETAILS	SURVEY BOOK	SHEET	
CHECKED: B. WRIGHT CHECKED: B. WRIGHT		ELECTRONIC	11 OF 15	
		CONTRACT	PROJECT	
		B-36910	1600808	

6412
BFS NO.

\\bfsn1241\jobs5\641200.0000\ProjDevelopment\Design\Drawings\BRIDGES\05 OVER VERMONT STREET\Structure 1901861\1901861_S_BR_BM001.dwg Dylan Piercefield Plot: 2/24/2020 6:17 AM Save: 12/16/2019 8:20 AM

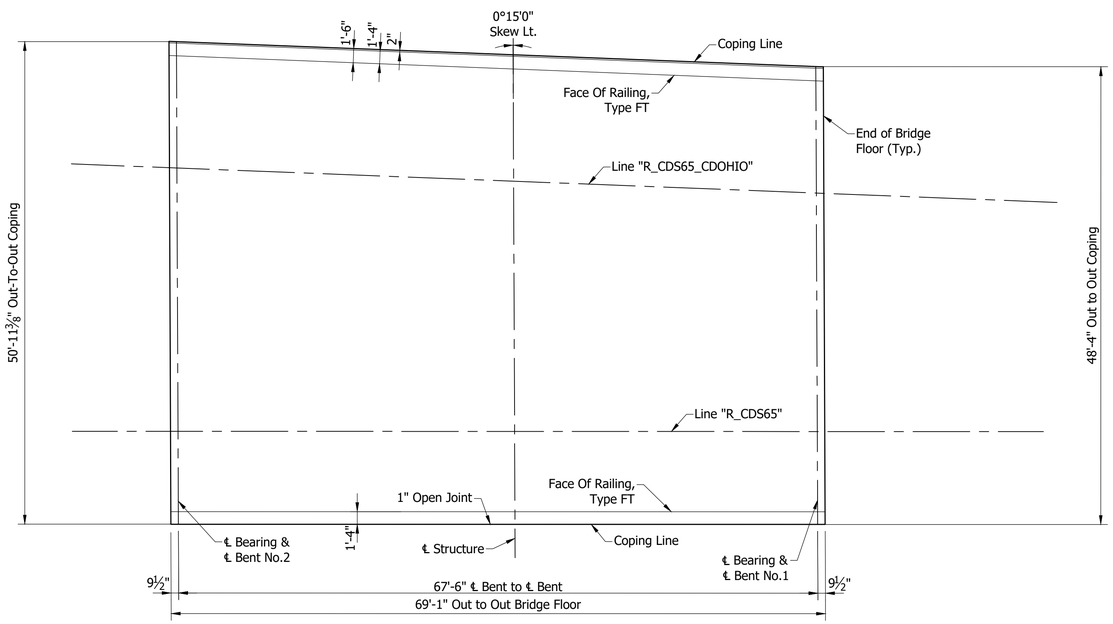

SPAN "A"

FLOOR PLAN

Scale: 1/8" = 1'-0"

NOTE:
See Sheet ___ For _____

	RECOMMENDED FOR APPROVAL: _____ DESIGN ENGINEER _____ DATE	INDIANA DEPARTMENT OF TRANSPORTATION	HORIZONTAL SCALE: As Noted	BRIDGE FILE: I65-111-10610 CD
			VERTICAL SCALE: N/A	DESIGNATION: 1901861
	DESIGNED: V. SATHIRAJU DRAWN: L. KIRSCH	FLOOR DETAILS	SURVEY BOOK: ELECTRONIC	SHEET: 12 OF 15
	CHECKED: B. WRIGHT CHECKED: B. WRIGHT		CONTRACT: B-36910	PROJECT: 1600808

BFS NO. 6412

\\bfsn1241\jobs5\641200.0000\ProDevelopment\Design\Drawings\BRIDGES\05_OVER_VERMONT_STREET\Structure 1901861\1901861_S_BR_FLR01.dwg Dylon Piercefield Plot:2/24/2020 6:17 AM Save:1/31/2020 8:30 AM

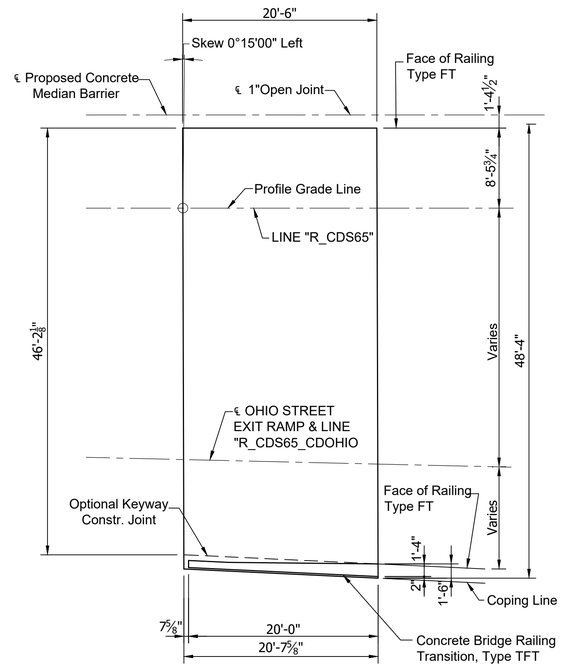

PLAN
NORTH SLAB
Scale: ⅛"=1'-0"

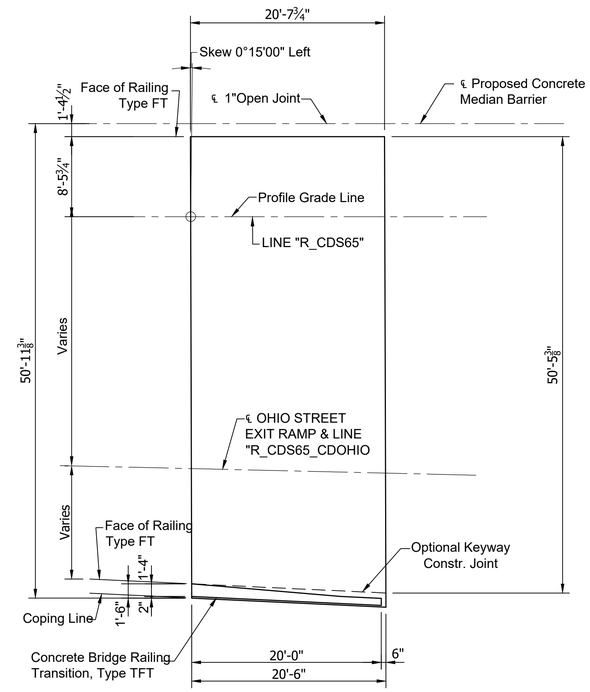

PLAN
SOUTH SLAB
Scale: ⅛"=1'-0"

RECOMMENDED FOR APPROVAL: DESIGN ENGINEER DATE	INDIANA DEPARTMENT OF TRANSPORTATION	HORIZONTAL SCALE: As Noted	BRIDGE FILE: I65-111-10610 CD	
		VERTICAL SCALE: N/A	DESIGNATION: 1901861	
DESIGNED: D. SHEETZ DRAWN: D. SHEETZ	APPROACH SLAB	SURVEY BOOK: ELECTRONIC	SHEET: 13 OF 15	
CHECKED: B. WRIGHT CHECKED: B. WRIGHT		CONTRACT: B-36910	PROJECT: 1600808	

6412

BFS NO.

\\bfsn1241\jobs5\641200.0000\Pro\Development\Design\Drawings\BRIDGES\05_OVER_VERMONT_STREET\Structure_1901861\1901861_S_BR_AP501.dwg Dylon Piercefield Plot:2/24/2020 6:17 AM Save:2/18/2020 9:50 AM

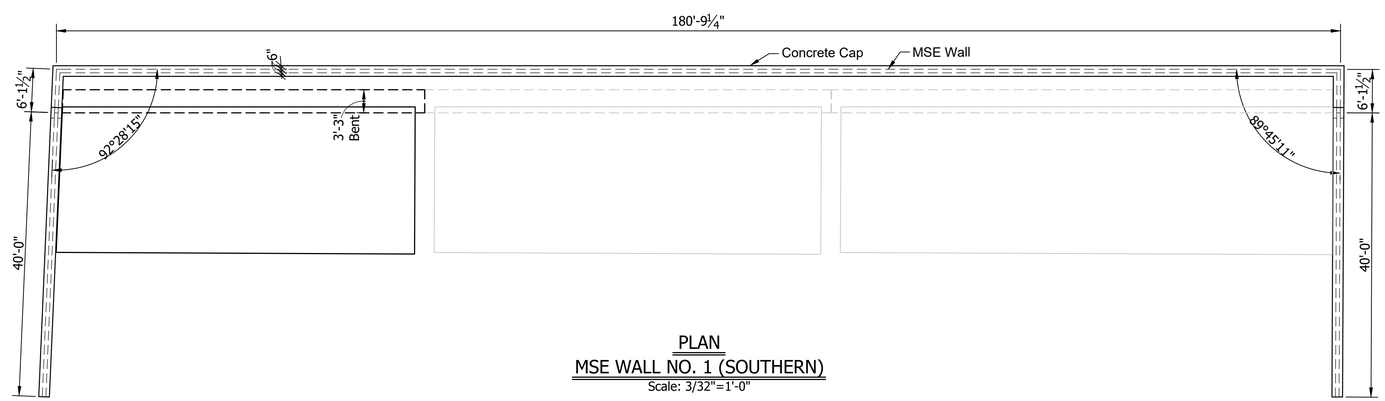

PLAN
MSE WALL NO. 1 (SOUTHERN)
Scale: 3/32"=1'-0"

NOTE:
Elevation Looking At Back Face of Wall

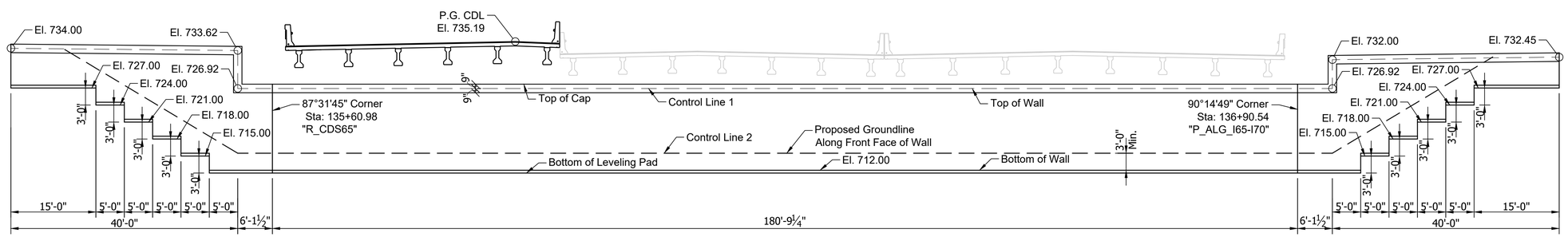

ELEVATION
MSE WALL NO. 1 (SOUTHERN)
Scale: 3/32"=1'-0"

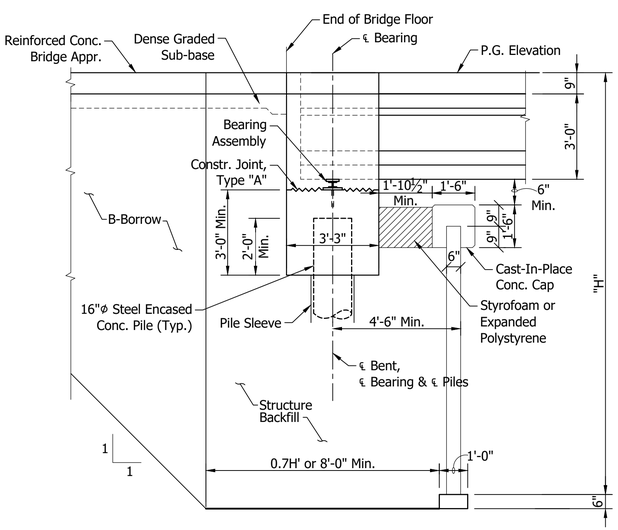

SECTION
MSE WALL NO. 1
Scale: 3/8"=1'-0"

RECOMMENDED FOR APPROVAL: DESIGN ENGINEER DATE	INDIANA DEPARTMENT OF TRANSPORTATION	HORIZONTAL SCALE: As Noted	VERTICAL SCALE: N/A	BRIDGE FILE: I65-111-10610 CD
		DESIGNATION: 1901861		
DESIGNED: B. WRIGHT DRAWN: D. PIERCEFIELD	WALL LAYOUT	SURVEY BOOK: ELECTRONIC	SHEET: 14 OF 15	
CHECKED: M. EICHENAUER CHECKED: B. WRIGHT		CONTRACT: B-36910	PROJECT: 1600808	

BFS NO. 6412

\\bfsn1241\jobs5\641200.0000\Proj\Development\Design\Drawings\BRIDGES\05 OVER VERMONT STREET\Structure 1901861\901861_S_BR_WL01.dwg Dylon Piercefield Plot:2/24/2020 6:18 AM Save:2/18/2020 7:36 AM

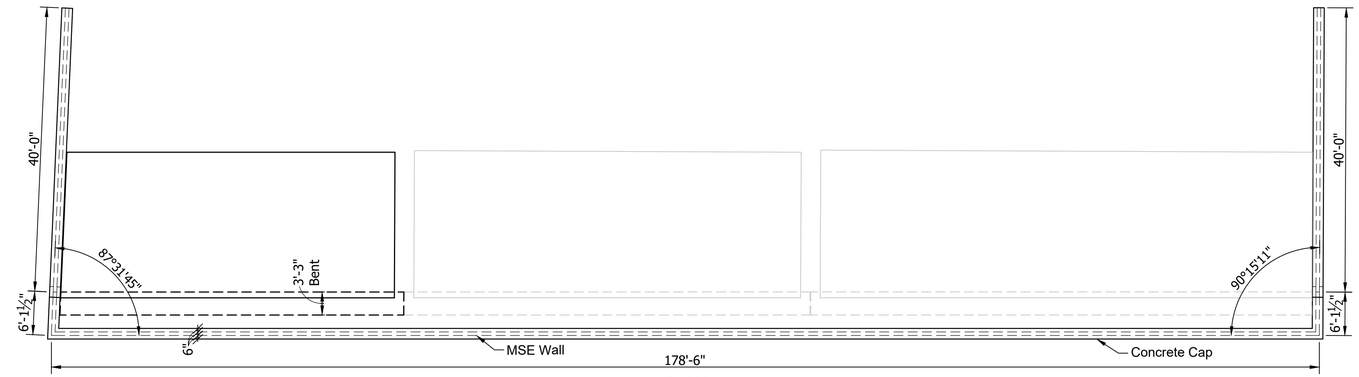

PLAN
MSE WALL NO. 2 (NORTHERN)
Scale: 3/32"=1'-0"

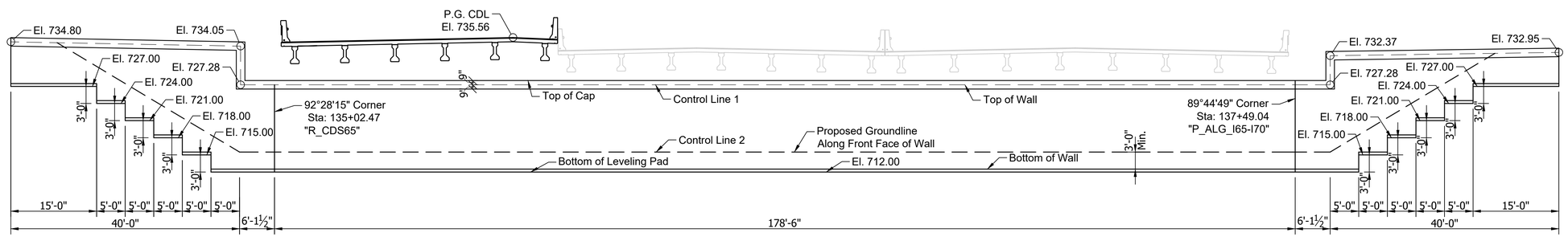

ELEVATION
MSE WALL NO. 2 (NORTHERN)
Scale: 3/32"=1'-0"

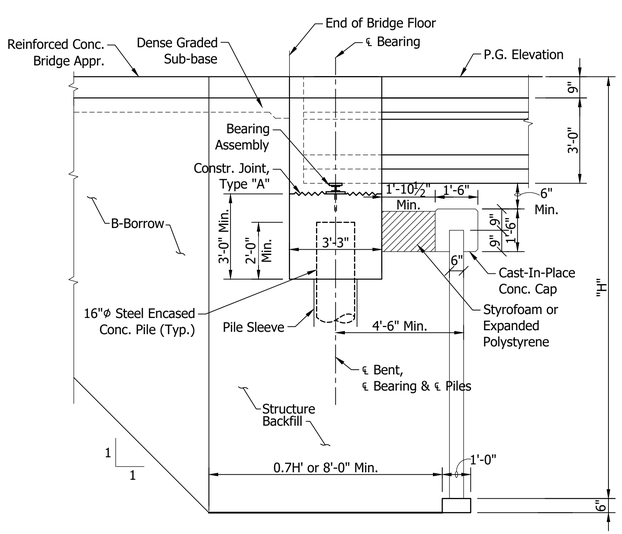

SECTION
MSE WALL NO. 2
Scale: 3/8"=1'-0"

RECOMMENDED FOR APPROVAL: DESIGN ENGINEER DATE	INDIANA DEPARTMENT OF TRANSPORTATION	HORIZONTAL SCALE: As Noted	BRIDGE FILE: I65-111-10610 CD	
		VERTICAL SCALE: N/A	DESIGNATION: 1901861	
DESIGNED: B. WRIGHT DRAWN: D. PIERCEFIELD	WALL LAYOUT	SURVEY BOOK: ELECTRONIC	SHEET: 15 OF 15	
CHECKED: M. EICHENAUER CHECKED: B. WRIGHT		CONTRACT: B-36910	PROJECT: 1600808	

BFS NO. 6412

\\bfsn1241\jobs5\641200.0000\ProjDevelopment\Design\Drawings\BRIDGES\05 OVER VERMONT STREET\Structure 1901861\1901861_S_BR_WL02.dwg Dylon Piercefield Plot:2/24/2020 6:18 AM Save:2/18/2020 8:52 AM

PROJECT	DESIGNATION
1600808	1901862
CONTRACT	BRIDGE FILE
B-36910	106-111-10611 CNBL

STRUCTURE INFORMATION

STRUCTURE	TYPE	SPAN & SKEW	OVER	STATION
106-111-10611 CNBL	PRESTRESSED COMPOSITE CONCRETE BULB-TEE BEAM BRIDGE	1 SPAN: 88'-6" SKEW: NO SKEW	MICHIGAN STREET	101+88.81 LINE "R_N65"

INDIANA DEPARTMENT OF TRANSPORTATION

BRIDGE PLANS

FOR SPANS OVER 20 FEET

ROUTE: I-65 N.B. / I-70 E.B. AT: RP 111+69

PROJECT NO. 1600808 P.E.

1600808 CONST.

NO ADDITIONAL RIGHT OF WAY REQUIRED FOR THIS PROJECT

BRIDGE REPLACEMENT ON I-65 N.B. / I-70 E.B. OVER MICHIGAN STREET
LOCATED 1.39 MILES NORTH OF I-70 (SOUTH SPLIT) INTERCHANGE
SECTION 1, TOWNSHIP 15 NORTH, RANGE 3 EAST
CENTER TOWNSHIP, MARION COUNTY INDIANA

TRAFFIC DATA	I-65 / I-70 N.B.	I-70 E.B.	MICHIGAN STREET
A.D.T. (2021)	28,680 V.P.D.	41,522 V.P.D.	5,859 V.P.D.
A.D.T. (2041)	34,823 V.P.D.	49,972 V.P.D.	18,483 V.P.D.
D.H.V. (2041)	3,357 V.P.H.	4,335 V.P.H.	1,492 V.P.H.
DIRECTIONAL DISTRIBUTION	100 %	100 %	55 %
TRUCKS	3 % D.H.V.	15 % D.H.V.	6 % D.H.V.
DESIGN DATA			
DESIGN SPEED	50 M.P.H.	50 M.P.H.	30 M.P.H.
PROJECT DESIGN CRITERIA	4R (FREEWAY)		N/A
FUNCTIONAL CLASSIFICATION	URBAN FREEWAY		MINOR ARTERIAL
RURAL/URBAN	URBAN (BUILT-UP)		URBAN (BUILT-UP)
TERRAIN	LEVEL		LEVEL
ACCESS CONTROL	FULL CONTROL		FULL

END PROJECT No. 1600808
STATION 25+75.00 LINE "P_ALG_I65"

END PROJECT No. 1600808
STATION 41+85.70 LINE "P_ALG_I70"

R. 3 E. | R. 4 E.

T. 16 N.

T. 15 N.

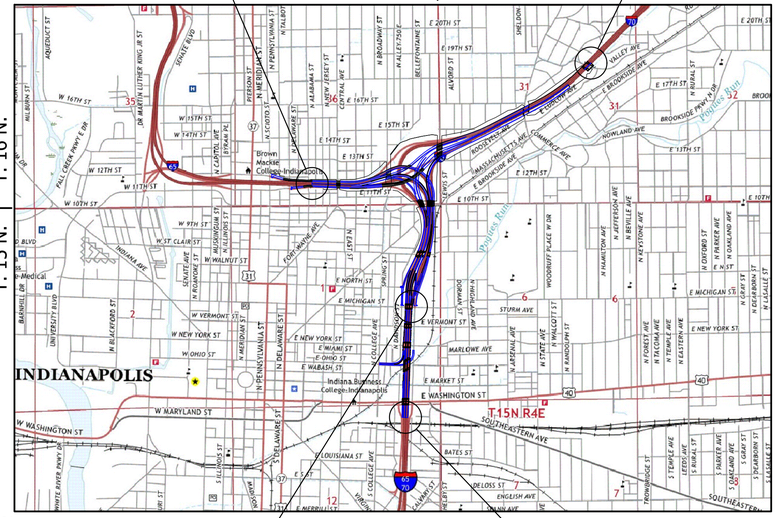

SCALE: 1" = 2000'

PROJECT LOCATION
BRIDGE FILE No. 106-111-10611 CNBL
I-65 N.B. / I-70 E.B. OVER MICHIGAN STREET
STA. 101+88.81 LINE "R_N65"

LOCATION MAP
MARION COUNTY

BEGIN PROJECT No. 1600808
STATION 113+00.00 LINE "P_ALG_I65/I70"

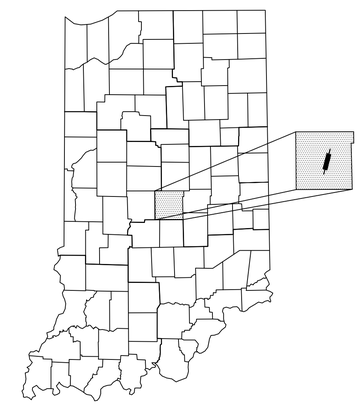

PROJECT LOCATION SHOWN BY

LATITUDE: 39°46'26" N LONGITUDE: 86°08'33" W

BRIDGE LENGTH :	0.018 MI.
ROADWAY LENGTH :	SEE ROAD PLANS
TOTAL LENGTH :	SEE ROAD PLANS
MAX GRADE :	2.36%

HUC: 05120201130020

INDIANA DEPARTMENT OF TRANSPORTATION
STANDARD SPECIFICATIONS DATED 2020 TO
BE USED WITH THESE PLANS.

SUPERIOR CONSTRUCTION

PLANS PREPARED BY: Butler Fairman and Seufert Inc. (317)713-4615 PHONE

CERTIFIED BY: #/#/# DATE

APPROVED FOR LETTING: #/#/#
INDIANA DEPARTMENT OF TRANSPORTATION DATE

BRIDGE FILE
106-111-10611 CNBL
DESIGNATION
1901862

SURVEY BOOK	SHEET		
ELECTRONIC	1	OF	15
CONTRACT	PROJECT		
B-36910	1600808		

6412

\\bfsn1241\Jobs5\641200.0000\ProjDevelopment\Design\Drawings\BRIDGES\06 OVER MICHIGAN STREET\Structure 1901862\1901862_S_BR_TTL01.dwg Dylan Piercefield Plot: 2/24/2020 6:19 AM Save: 2/21/2020 10:51 AM

UTILITIES

REVISIONS

SHEET NO.	DATE	REVISED

KIN PROJECT INFORMATION

DESIGNATION	PROJECT DESCRIPTION	
1600808	COMPLETE ROAD RECONSTRUCTION OF I-65/I-70 FROM WASHINGTON STREET TO I-65 OVER DELAWARE STREET AND I-70 OVER VALLEY AVENUE	LEAD DES
1901935	ITS FOR I-65/I-70 FROM WASHINGTON STREET TO I-65 OVER DELAWARE STREET AND I-70 OVER VALLEY AVENUE	
1901936	SIGNS, LIGHTING, SIGNALS AND MARKING FOR I-65/I-70 FROM WASHINGTON STREET TO I-65 OVER DELAWARE STREET AND I-70 OVER VALLEY AVENUE	
1901847	BRIDGE REPLACEMENT ON I-65/I-70 NB OVER WASHINGTON STREET	
1901848	BRIDGE REPLACEMENT ON I-65/I-70 SB OVER WASHINGTON STREET	
1901849	BRIDGE REPLACEMENT ON I-65/I-70 SB CD OVER WASHINGTON STREET	
1901850	BRIDGE REPLACEMENT ON I-65/I-70 NB OVER MARKET STREET	
1901851	BRIDGE REPLACEMENT ON I-65/I-70 SB OVER MARKET STREET	
1901852	BRIDGE REPLACEMENT ON I-65/I-70 SB CD OVER MARKET STREET	
1901853	BRIDGE REPLACEMENT ON I-65/I-70 NB OVER CSX RAILROAD & OHIO STREET	
1901854	BRIDGE REPLACEMENT ON I-65/I-70 SB OVER CSX RAILROAD & OHIO STREET	
1901855	BRIDGE REPLACEMENT ON I-65/I-70 SB CD OVER CSX RAILROAD & OHIO STREET	
1901856	BRIDGE REPLACEMENT ON I-65/I-70 NB OVER NEW YORK STREET	
1901857	BRIDGE REPLACEMENT ON I-65/I-70 SB OVER NEW YORK STREET	
1901858	BRIDGE REPLACEMENT ON I-65/I-70 SB CD OVER NEW YORK STREET	
1901861	BRIDGE REPLACEMENT ON I-65/I-70 SB CD OVER VERMONT STREET	
1901862	BRIDGE REPLACEMENT ON I-65 NB & I-70 EB OVER MICHIGAN STREET	
1901863	BRIDGE REPLACEMENT ON I-65 SB/I-70 WB OVER MICHIGAN STREET	
1901864	BRIDGE REPLACEMENT ON I-65/I-70 SB CD OVER MICHIGAN STREET	
1901865	BRIDGE REPLACEMENT ON I-65 NB OVER I-70 EB ENTRANCE RAMP	
1901881	BRIDGE REPLACEMENT ON I-65 NB OVER ST. CLAIR STREET	
1901889	NEW BRIDGE CONSTRUCTION ON I-70 EB OVER ST. CLAIR STREET	
1901892	BRIDGE REPLACEMENT ON I-65 SB/I-70 WB OVER ST. CLAIR STREET	
1901896	NEW BRIDGE CONSTRUCTION ON SB CD OVER ST. CLAIR STREET	
1901897	BRIDGE REPLACEMENT ON I-65 NB OVER EAST 10TH STREET	
1901899	NEW BRIDGE CONSTRUCTION ON I-70 EB OVER EAST 10TH STREET	
1901901	BRIDGE REPLACEMENT ON I-65 SB OVER EAST 10TH STREET	
1901903	BRIDGE REPLACEMENT ON I-70 WB OVER EAST 10TH STREET	
1901905	NEW BRIDGE CONSTRUCTION ON SB CD & RAMP OVER EAST 10TH STREET	
1901906	NEW BRIDGE CONSTRUCTION ON I-65 NB CD EXIT RAMP OVER CENTRAL AVENUE	
1901907	BRIDGE REPLACEMENT ON I-65 NB OVER CENTRAL AVENUE	
1901908	BRIDGE REPLACEMENT ON I-65 SB OVER CENTRAL AVENUE	
1901909	NEW BRIDGE CONSTRUCTION ON I-65 SB CD ENTRANCE RAMP OVER CENTRAL AVE.	
1901914	BRIDGE REPLACEMENT ON I-70 WB TO I-65 NB OVER COLLEGE AVENUE	
1901915	BRIDGE REPLACEMENT ON I-65 NB & PENNSYLVANIA EXIT RAMP OVER COLLEGE AVENUE	
1901917	BRIDGE REPLACEMENT ON I-65 SB & SB CD RAMP OVER COLLEGE AVENUE	
1901918	BRIDGE REPLACEMENT ON I-65 SB & DELAWARE ENTRANCE RAMP TO I-70 EB OVER COLLEGE AVENUE & FIVE RAMPS	
1901919	BRIDGE REPLACEMENT ON I-65 NB OVER I-70 WB & RAMP	
1901920	BRIDGE REPLACEMENT ON I-70 WB TO I-65 NB OVER THREE RAMPS	
1901921	BRIDGE REPLACEMENT ON I-65 SB OVER I-70 WB & SB CD RAMP	
1901922	NEW BRIDGE CONSTRUCTION ON I-70 EB OVER I-65 NB	
1901923	BRIDGE REPLACEMENT ON I-70 WB & SB CD OVER LEWIS STREET & MONON TRAIL	
1901925	NEW BRIDGE CONSTRUCTION ON I-70 WB TO I-65 NB OVER LEWIS STREET & MONON TRAIL	
1901927	NOT USED	
1901928	BRIDGE REPLACEMENT ON I-70 EB OVER LEWIS STREET & MONON TRAIL	
1901929	PREVENTATIVE MAINTENANCE ON I-70 WB OVER ROOSEVELT AT COMMERCE AVENUE	
1901930	PREVENTATIVE MAINTENANCE ON I-70 EB OVER ROOSEVELT AT COMMERCE AVENUE	
1901931	PREVENTATIVE MAINTENANCE ON I-70 WB OVER VALLEY AVENUE	
1901932	PREVENTATIVE MAINTENANCE ON I-70 EB OVER VALLEY AVENUE	
1901933	REHABILITATE AND WIDEN ON I-65 OVER 7 STREETS, ACCESS RD, MONORAIL (AKA "MONSTER BRIDGE") - PENNSYLVANIA EXIT RAMP	
1901934	REHABILITATE AND WIDEN ON I-65 OVER 7 STREETS, ACCESS RD, MONORAIL (AKA "MONSTER BRIDGE") - DELAWARE ENTRANCE RAMP	
1902179	BRIDGE REPLACEMENT ON I-65 NB/I70 EB OVER VERMONT STREET	
1902180	BRIDGE REPLACEMENT ON I-65 SB/I70 WB OVER VERMONT STREET	

INDEX

SHEET NO.	DESIGNATION
1	TITLE
2	INDEX
3	MAINTENANCE OF TRAFFIC
4	LAYOUT
5	GENERAL PLAN - PLAN & ELEVATION VIEWS
6	GENERAL PLAN - TYPICAL SECTION
7	BENT NO. 1 DETAILS
8	BENT NO. 2 DETAILS
9	BENTS NO. 1 AND NO. 2 DETAILS
10	FRAMING PLAN
11	BEAM DETAILS
12	FLOOR DETAILS
13	APPROACH SLAB
14	WALL LAYOUT
15	WALL LAYOUT

RECOMMENDED FOR APPROVAL: _____ DESIGN ENGINEER #/#/# DATE

DESIGNED: B. WRIGHT DRAWN: K. COFFMAN

CHECKED: V. SATHIRAJU CHECKED: B. WRIGHT

INDIANA
DEPARTMENT OF TRANSPORTATION

INDEX

HORIZONTAL SCALE	BRIDGE FILE
N/A	106-111-10611 CNBL
VERTICAL SCALE	DESIGNATION
N/A	1901862
SURVEY BOOK	SHEET
ELECTRONIC	2 OF 15
CONTRACT	PROJECT
B-36910	1600808

BPS NO. 6412

\\bfsn1241\Jobs5\641200.0000\ProjDevelopment\Design\Drawings\BRIDGES\06 OVER MICHIGAN STREET\Structure 1901862\1901862_S_BR_IND01.dwg Dylan Piercefield Plot: 2/24/2020 6:19 AM Save: 2/19/2020 10:01 AM

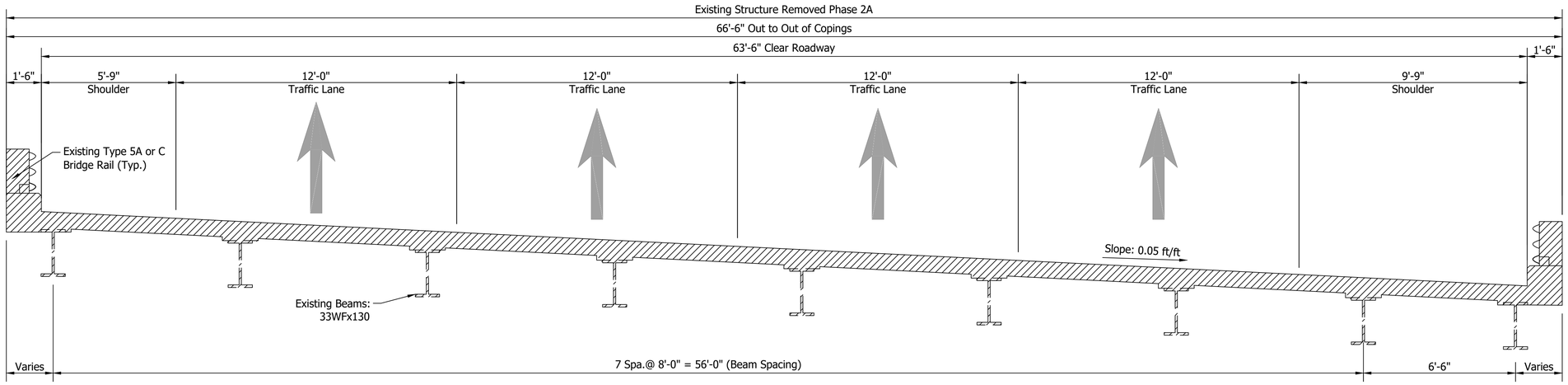

EXISTING NORTHBOUND TYPICAL SECTION

Scale: 3/8"=1'-0"

LEGEND

Limits of Removal

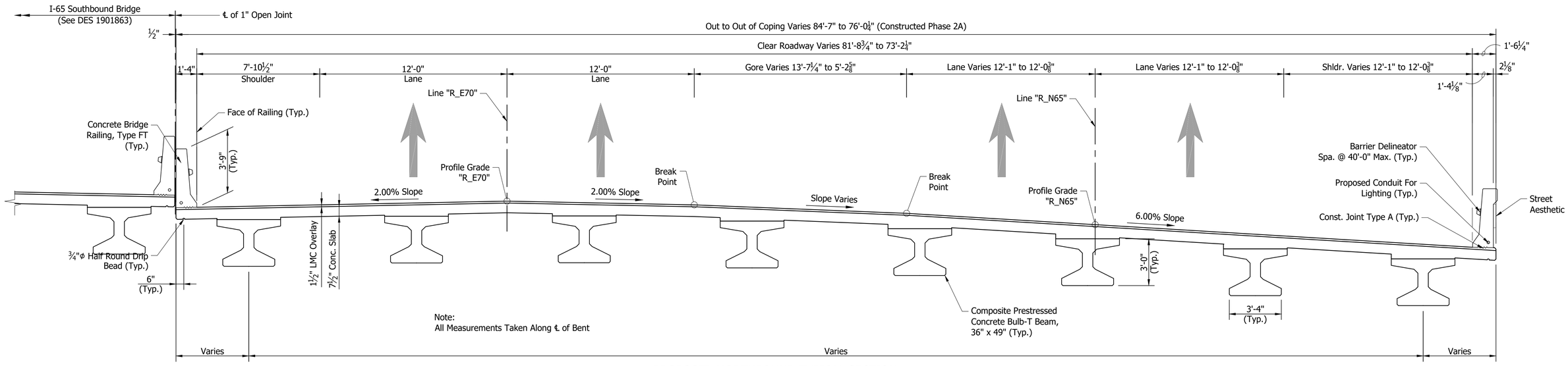

PROPOSED NORTHBOUND TYPICAL SECTION

Scale: 5/16"=1'-0"

RECOMMENDED FOR APPROVAL: _____ DESIGN ENGINEER DATE	INDIANA DEPARTMENT OF TRANSPORTATION	HORIZONTAL SCALE: As Noted	BRIDGE FILE: 106-111-10611 CNBL
		VERTICAL SCALE: N/A	DESIGNATION: 1901862
DESIGNED: V. SATHIRAJU DRAWN: D. PIERCEFIELD	MAINTENANCE OF TRAFFIC	SURVEY BOOK	SHEET
CHECKED: B. WRIGHT CHECKED: B. WRIGHT		ELECTRONIC	3 OF 15
		CONTRACT: B-36910	PROJECT: 1600808

BFS NO. 6412

\\bfsn1241\Jobs5\641200.0000\ProjDevelopment\Design\Drawings\BRIDGES\06 OVER MICHIGAN STREET\Structure 1901862\1901862_S_BR_MOT01.dwg Dylan Piercefield Plot:2/24/2020 6:19 AM Save:2/6/2020 6:17 AM

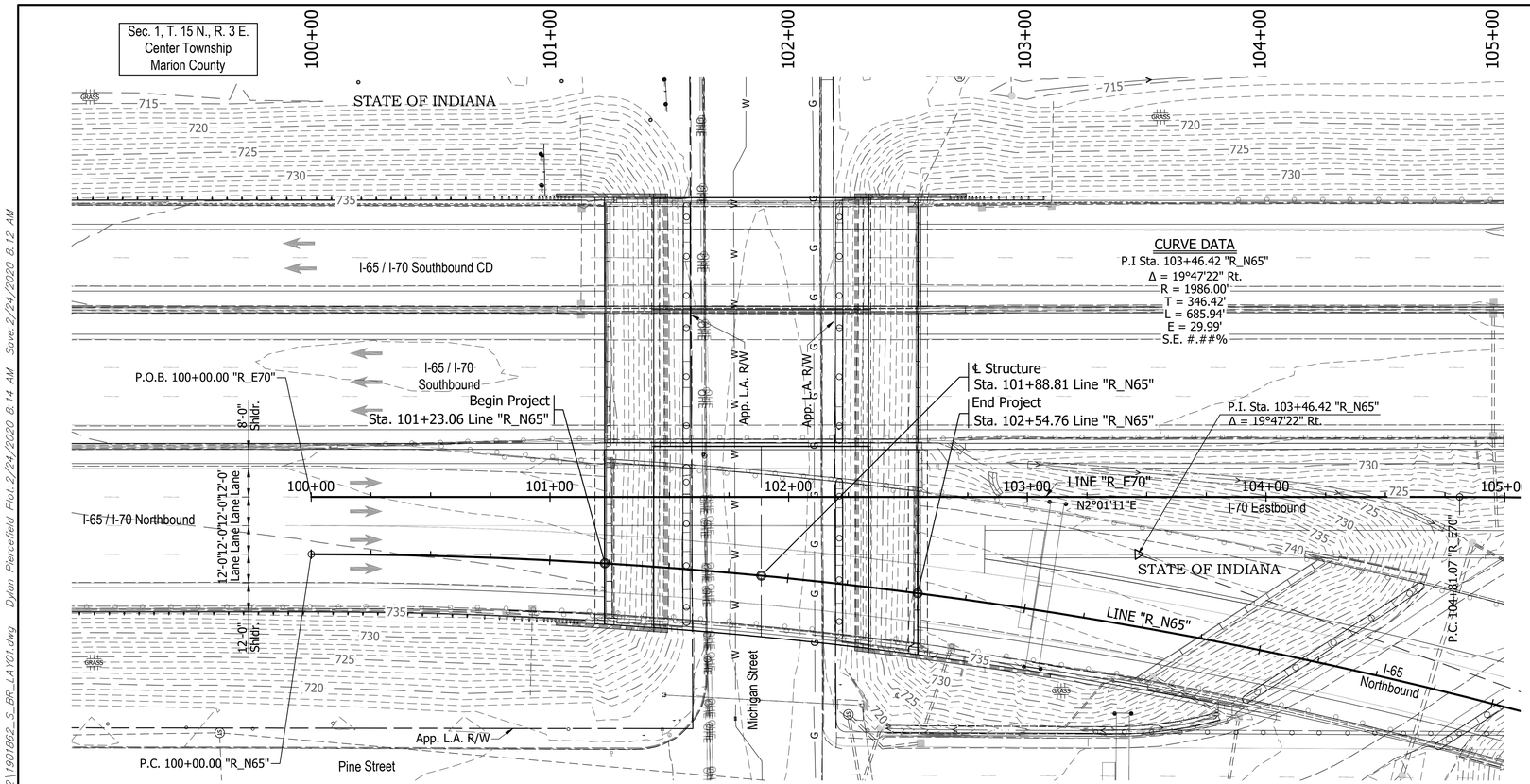

CURVE DATA

P.I Sta. 103+46.42 "R_N65"
Δ = 19°47'22" Rt.
R = 1986.00'
T = 346.42'
L = 685.94'
E = 29.99'
S.E. #.##%

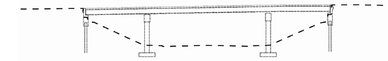

EXISTING STRUCTURE

The existing structure was built in 1974. Structure was rehabilitated in 2003 and had 2 eastern beams heat straightened in 2009. The structure is a 3-span continuous composite 33" WF steel beam.

Span lengths: 1 @ 33'-1⅝", 1 @ 64'-3 ¼", 1 @ 33'-1⅝"

Clear roadway 63'-6". Total length of 134'-1⅛"

Existing structure to be removed.

Existing plans are on file with the Indiana Department of Transportation under Bridge File No. I-65-112-5732, I-65-112-5732A & i-65-112-5732B.

EARTHWORK TABULATION

See Roadway Plans (DES #_____) for earthwork tabulation.

NOTE: ALL TOPOGRAPHY INFORMATION REFERENCED TO LINE "R_N65" UNLESS NOTED.

ALL R/W ON THIS SHEET DESCRIBED FROM LINE "R_N65" UNLESS OTHERWISE NOTED

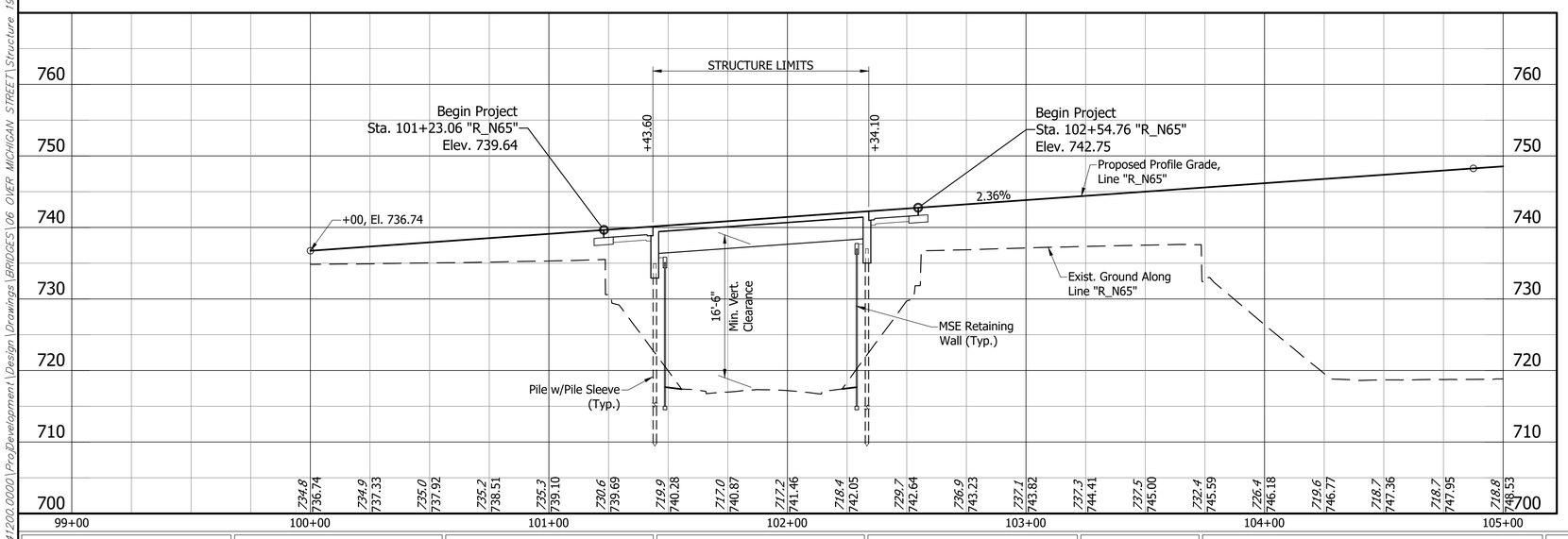

Notes:

1. For R/W and property information, see Location Control Route Survey (DES # _____).
2. For alignment data, see Geometric Layout Sheets (DES #_____).
3. See Road Plans (DES #_____) for Horizontal & Vertical Control Data.

PRESTRESSED COMPOSITE CONCRETE BULB-TEE BEAM BRIDGE
1 SPAN: 88'-6"
VARIES: 73'-2 1/4" TO 81'-8 3/4" CLEAR ROADWAY; SKEW: NO SKEW
I-65 N.B. / I-70 E.B. OVER MICHIGAN STREET
MARION COUNTY

RECOMMENDED FOR APPROVAL: _____ DESIGN ENGINEER #/#/# DATE

DESIGNED: B. WRIGHT DRAWN: L. KIRSCH
CHECKED: M. EICHENAUER CHECKED: B. WRIGHT

INDIANA
DEPARTMENT OF TRANSPORTATION

LAYOUT

HORIZONTAL SCALE	BRIDGE FILE
1" = 30'	106-111-10611 CNBL
VERTICAL SCALE	DESIGNATION
1" = 10'	1901862
SURVEY BOOK	SHEET
ELECTRONIC	4 OF 15
CONTRACT	PROJECT
B-36910	1600808

BFS NO. 6412

\\bfsn1241\Jobs5\641200.0000\ProjDevelopment\Design\Drawings\BRIDGES\06 OVER MICHIGAN STREET\Structure 1901862\1901862_S_BR_LA101.dwg Dylan Piercefield Plot: 2/24/2020 8:14 AM Save: 2/24/2020 8:12 AM

STRUCTURE TO BE BUILT ON A 2.36% GRADE ("R_N65" & "R_E70") AND 600' VERTICAL CURVE ("R_E70")

PVI Sta. 105+00 "R_E70"
PVI El. 749.14
600 V.C.

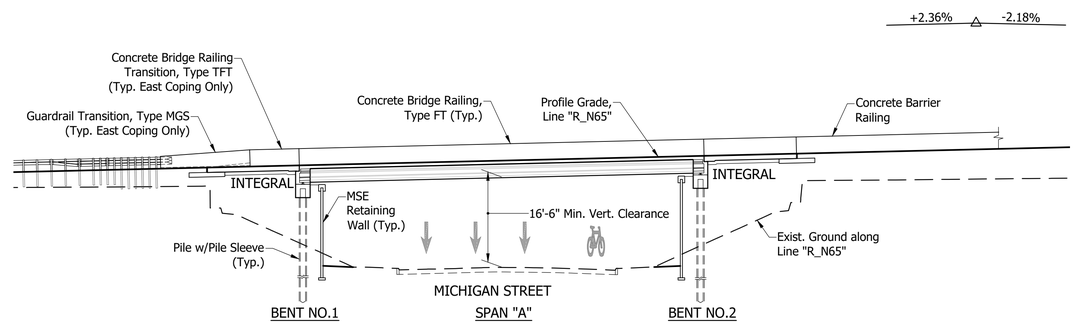

ELEVATION

Scale: 1/8" = 1'-0"

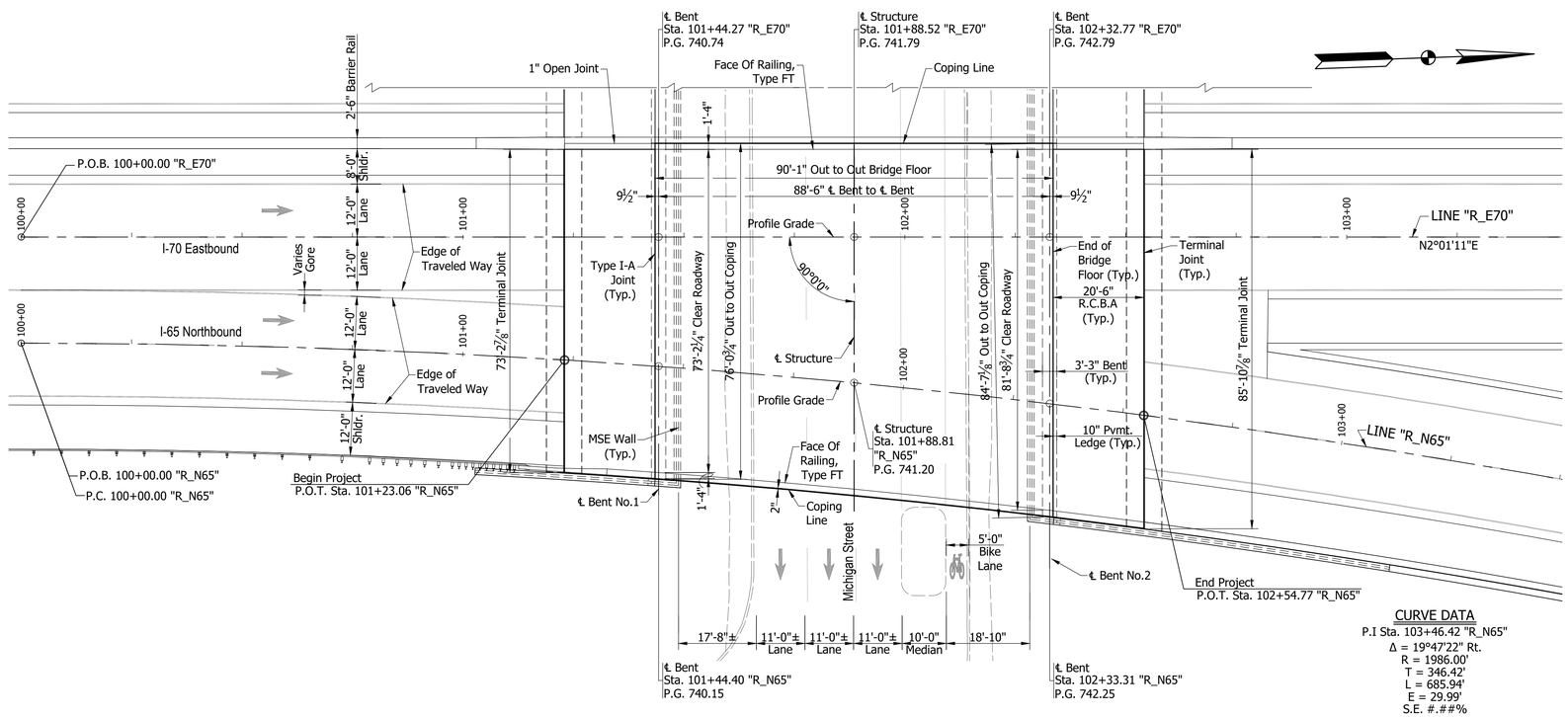

PLAN

Scale: 1/8" = 1'-0"

CURVE DATA

P.I Sta. 103+46.42 "R_N65"
Δ = 19°47'22" Rt.
R = 1986.00'
T = 346.42'
L = 685.94'
E = 29.99'
S.E. #.##%

NOTE:
See Sheet 6 For Typical Section

PRESTRESSED COMPOSITE CONCRETE
BULB-TEE BEAM BRIDGE
1 SPAN: 88'-6"
VARIES: 73'-2 1/4" TO 81'-8 3/4" CLEAR
ROADWAY; SKEW: NO SKEW
I-65 N.B. / I-70 E.B. OVER MICHIGAN STREET
MARION COUNTY

RECOMMENDED FOR APPROVAL: DESIGN ENGINEER	#/#/# DATE	INDIANA DEPARTMENT OF TRANSPORTATION	HORIZONTAL SCALE: As Noted; BRIDGE FILE: 106-111-10611 CNBL; VERTICAL SCALE: N/A; DESIGNATION: 1901862
DESIGNED: B. WRIGHT	DRAWN: L. KIRSCH	GENERAL PLAN - PLAN & ELEVATION VIEWS	SURVEY BOOK: ELECTRONIC; SHEET: 5 OF 15
CHECKED: M. EICHENAUER	CHECKED: B. WRIGHT		CONTRACT: B-36910; PROJECT: 1600808

BFS NO. 6412

\\bfsn1241\Jobs5\641200.0000\ProjDevelopment\Design\Drawings\BRIDGES\06_OVER_MICHIGAN_STREET\Structure_1901862\1901862_S_BR_PLN01.dwg Dylan Piercefield Plot:2/24/2020 8:14 AM Save:2/24/2020 8:13 AM

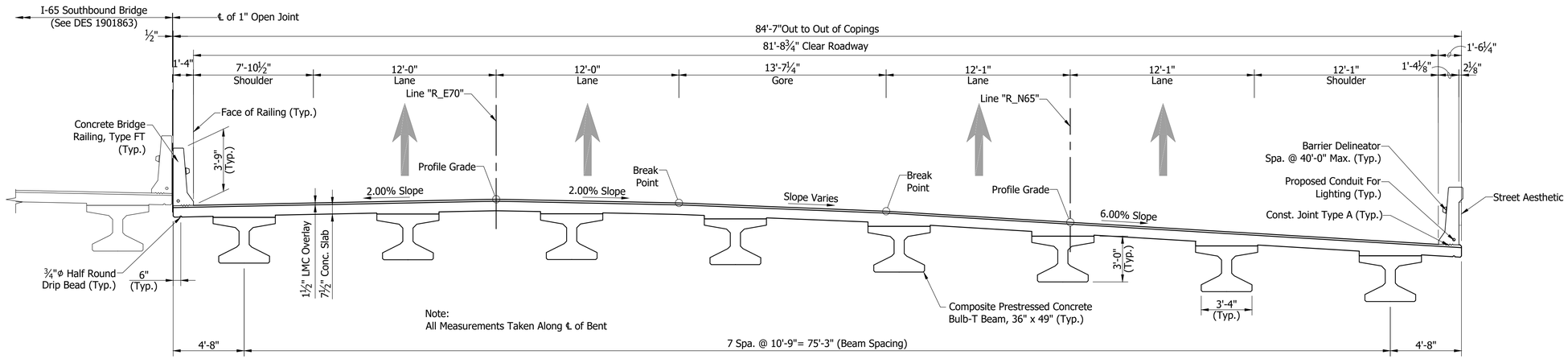

TYPICAL SECTION - WIDE SIDE (NORTH)

Scale: 1/4"= 1'-0"

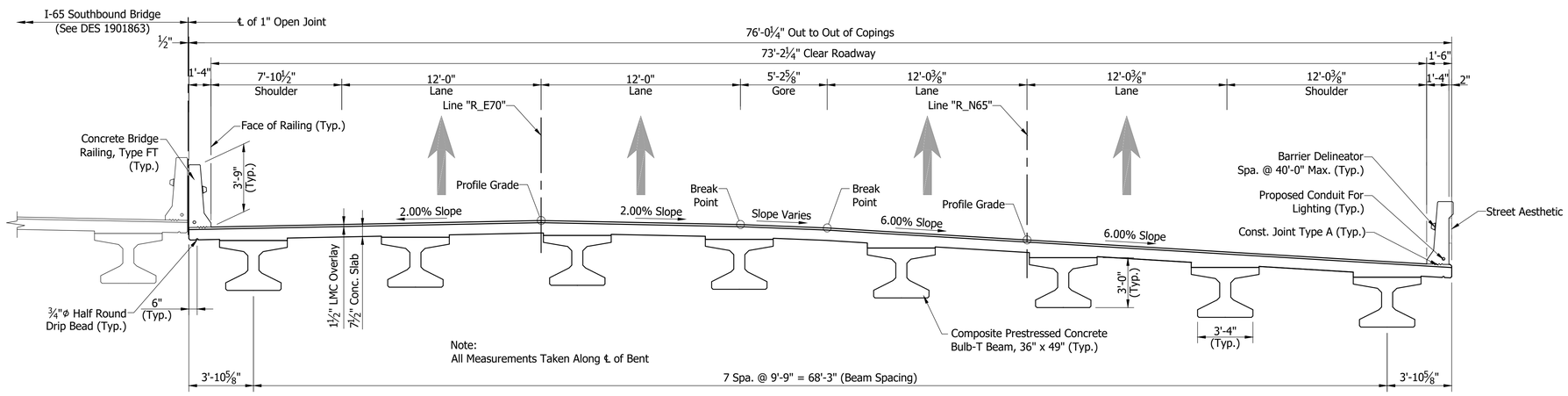

TYPICAL SECTION - NARROW SIDE (SOUTH)

Scale: 1/4"= 1'-0"

GENERAL NOTES

Reinforcing bars covering shall be 3 ½" in top and 1" min. in bottom of floor slabs and 3" in footings except bottom steel which shall be 4", and 2" in all other parts, unless noted.

Concrete in floor slab, and diaphragms, barriers, and end bents shall be an alternate Class C in accordance with the Technical Provisions.

Reinforcing Bars in Deck, Barrier, and End Bent Diaphragm Extending into the Deck shall be Stainless Steel. Reinforcing Bars in End Bent Diaphragm not Extending into the Deck and in the Cap shall be Epoxy Coated.

All exposed faces of the MSE walls and reinforced concrete bridge approach slabs shall receive surface seal.

See Bridge Aesthetic Plan for Archetectural Details.

DESIGN DATA

LIVE LOAD:

Superstructure and Substructure Designed for HL-93 loading in accordance with the AASHTO LRFD Bridge Design Specifications, 8th Edition, 2017 and its subsequent revisions.

DEAD LOAD:

Designed for Actual Dead Load plus 35 psf of future wearing surface, and 15 psf for SIP Metal Deck Forms.

FLOOR SLAB:

Slab designed with a 7 ½" structural depth and a 1 ½" very early strength LMC wearing surface.

CONSTRUCTION LOADING:

The exterior girder has been checked for strength, deflection, and overturning using the construction loads shown below. Cantilever overhang brackets were assumed for support of the deck overhang past the edge of the exterior beam. The finishing machine was assumed to be supported 6 in. outside the vertical coping form. The top overhang brackets were assumed to be located 6 in. past the edge of the vertical coping form. The bottom overhang brackets were assumed to be braced against the intersection of the girder bottom flange and web.

DECK FALSEWORK LOADS:

Designed for 15 psf for permanent metal stay-in-place deck forms, removable deck forms, and 2 ft. exterior walkway.

DESIGN STRESSES

CONSTRUCTION LIVE LOAD:

Designed for 20 psf extending 2 ft. past the edge of coping and 75 lb/ft vertical force applied at a distance of 6 in. outside the face of coping over a 30 foot length of the deck centered with the finishing machine.

FINISHING-MACHINE LOAD:

4500 lb distributed over 10 ft. along the coping.

WIND LOAD:

Designed for 70 mph horizontal wind load in accordance with LRFD 3.8.1.

ULTIMATE DESIGN STRENGTHS:

Class "A" Concrete	f'c = 3,500 p.s.i.
Class "B" Concrete	f'c = 3,000 p.s.i.
Class "C" Concrete	f'c = 4,000 p.s.i.
Reinforcing Steel (Grade 60)	Fy = 60,000 p.s.i. (barrier)
	Fy = 75,000 p.s.i. (deck)
	Fy = 75,000 p.s.i. (all other locations)

SEISMIC DESIGN DATA:

Seismic Site Class	C
PGA (g)	0.051
S_s (g)	0.12
S_1 (g)	0.051
S_{D1} (g)	0.086
Seismic Design Category	A

PRESTRESSED COMPOSITE CONCRETE BULB-TEE BEAM BRIDGE
1 SPAN: 88'-6"
VARIES: 73'-2 1/4" TO 81'-8 3/4" CLEAR ROADWAY; SKEW: NO SKEW
I-65 N.B. / I-70 E.B. OVER MICHIGAN STREET
MARION COUNTY

RECOMMENDED FOR APPROVAL: DESIGN ENGINEER #/#/# DATE	INDIANA DEPARTMENT OF TRANSPORTATION	HORIZONTAL SCALE: N/A	BRIDGE FILE: 106-111-10611 CNBL
		VERTICAL SCALE: N/A	DESIGNATION: 1901862
DESIGNED: B. WRIGHT DRAWN: L. KIRSCH	GENERAL PLAN - TYPICAL SECTION	SURVEY BOOK: ELECTRONIC	SHEET: 6 OF 15
CHECKED: M. EICHENAUER CHECKED: B. WRIGHT		CONTRACT: B-36910	PROJECT: 1600808

BFS NO. 6412

\\bfsn1241\jobs5\641200.0000\ProDevelopment\Design\Drawings\BRIDGES\06 OVER MICHIGAN STREET\Structure 1901862\1901862_S_BR_PLN02.dwg Dylan Piercefield Plot:2/24/2020 6:20 AM Save:2/20/2020 4:13 PM

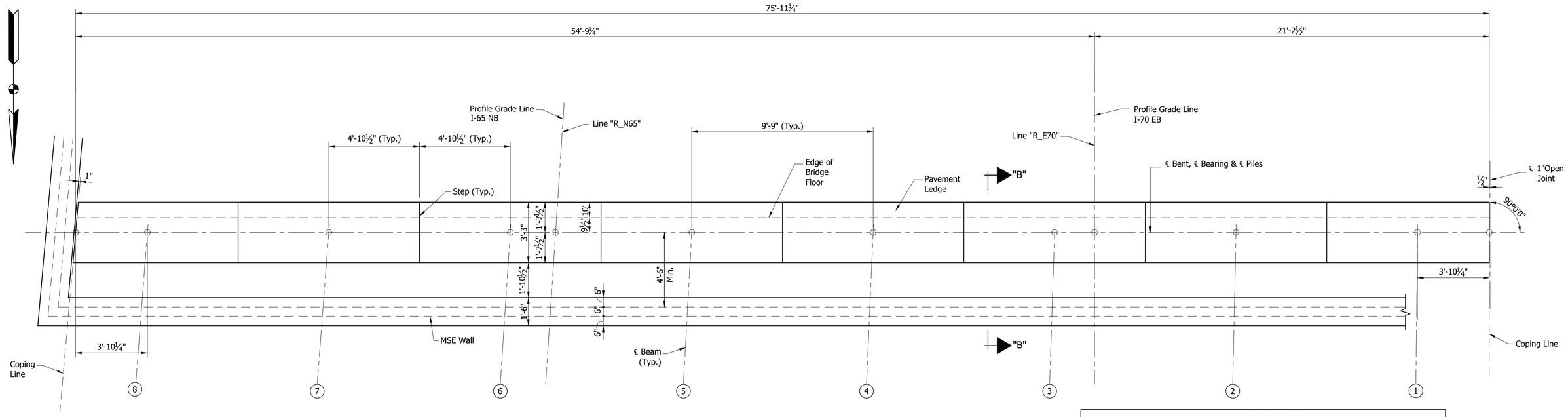

PLAN

Scale: ⅜"=1'-0"

SEAT ELEVATIONS								
Beam No.	8	7	6	5	4	3	2	1
Bent No.1	733.57	734.15	734.74	735.32	735.80	735.99	735.88	735.69

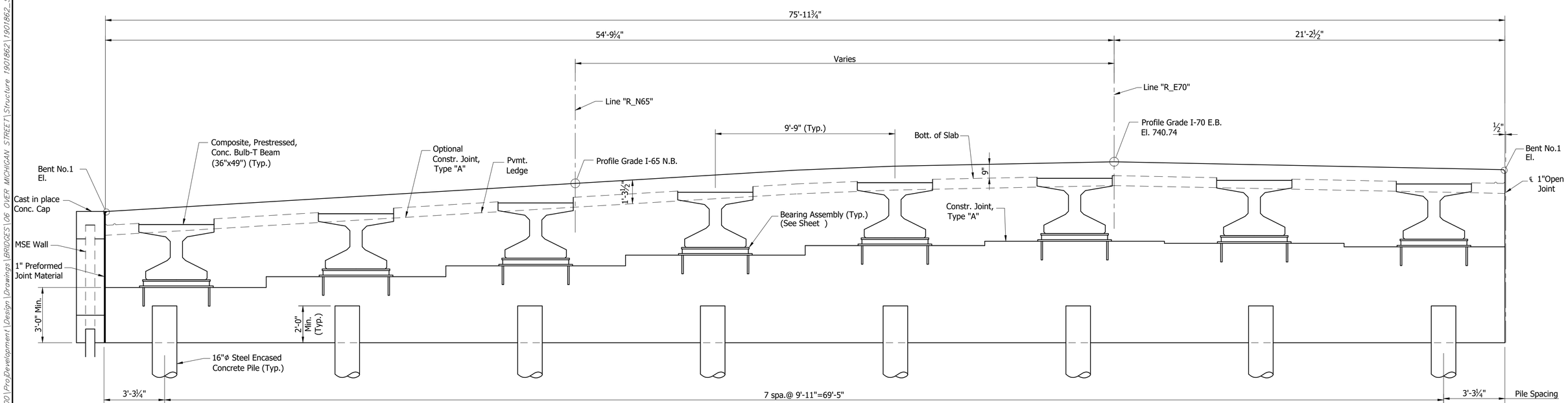

SECTION ALONG ℄ BENT

Scale: ⅜"=1'-0"

RECOMMENDED FOR APPROVAL: _____ DESIGN ENGINEER DATE

DESIGNED: B. WRIGHT DRAWN: D. SHEETZ

CHECKED: V. SATHIRAJU CHECKED: B. WRIGHT

INDIANA
DEPARTMENT OF TRANSPORTATION

BENT NO. 1 DETAILS

HORIZONTAL SCALE	BRIDGE FILE
As Noted	106-111-10611 CNBL
VERTICAL SCALE	DESIGNATION
N/A	1901862
SURVEY BOOK	SHEET
ELECTRONIC	7 OF 15
CONTRACT	PROJECT
B-36910	1600808

BFS NO. 6412

\\bfsn1241\jobs5\641200.0000\Proj\Development\Design\Drawings\BRIDGES\06 OVER MICHIGAN STREET\Structure 1901862\1901862_S_BR_BNT01 - BENT DETAIL.dwg Dylan Piercefield Plot:2/24/2020 6:20 AM Save:2/18/2020 9:43 AM

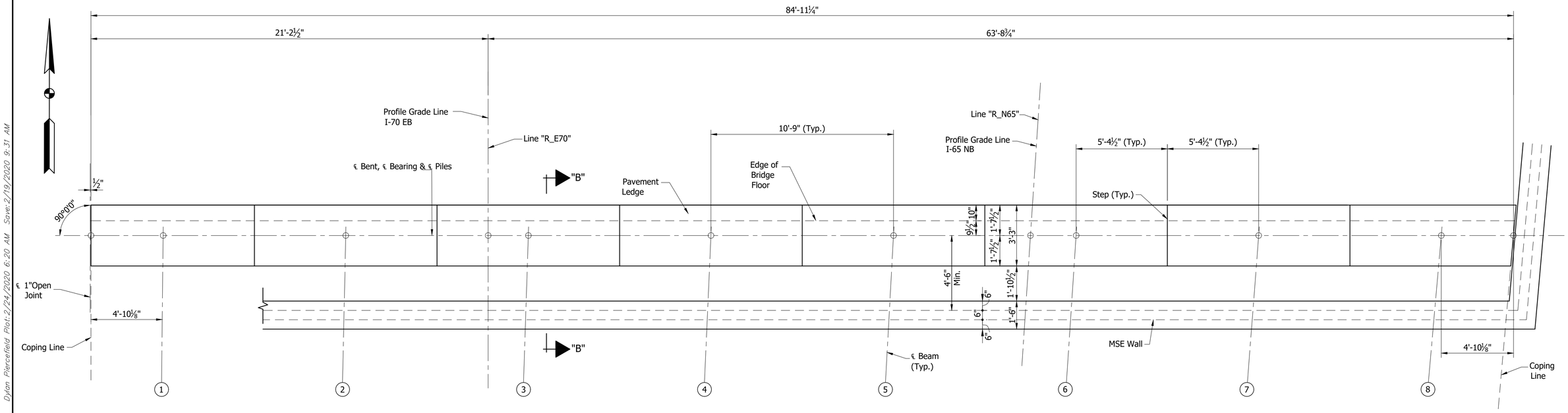

PLAN

Not to Scale

SEAT ELEVATIONS								
Beam No.	1	2	3	4	5	6	7	8
Bent No.2	738.10	738.31	738.33	738.03	737.59	736.95	736.300	735.66

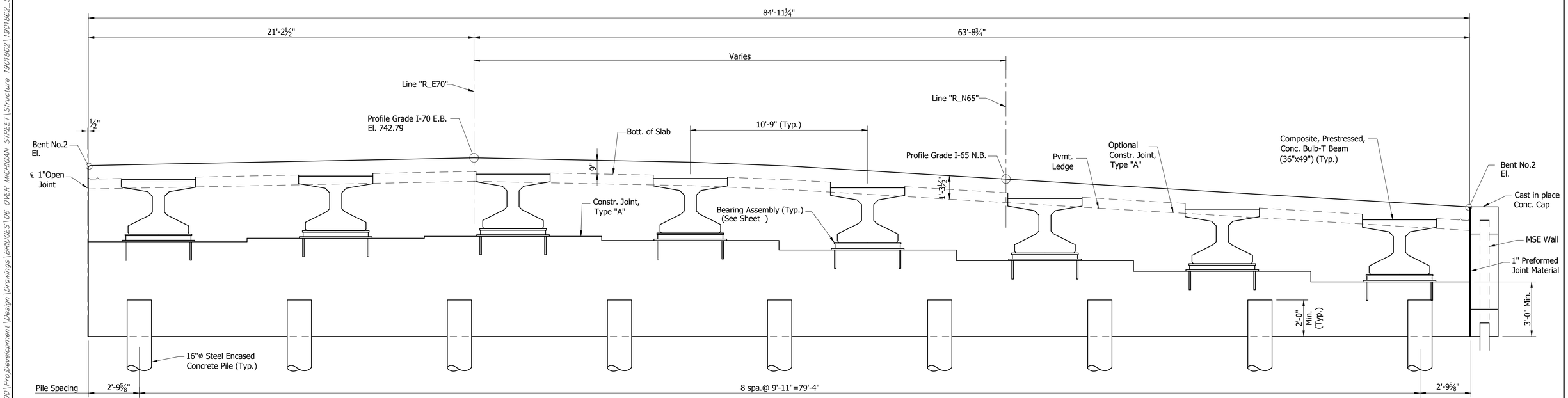

SECTION ALONG ℄ BENT

Not to Scale

RECOMMENDED FOR APPROVAL: _____ DESIGN ENGINEER _____ DATE

DESIGNED: B. WRIGHT DRAWN: D. SHEETZ

CHECKED: V. SATHIRAJU CHECKED: B. WRIGHT

INDIANA
DEPARTMENT OF TRANSPORTATION

BENT NO. 2 DETAILS

HORIZONTAL SCALE	BRIDGE FILE
As Noted	106-111-10611 CNBL
VERTICAL SCALE	DESIGNATION
N/A	1901862
SURVEY BOOK	SHEET
ELECTRONIC	8 OF 15
CONTRACT	PROJECT
B-36910	1600808

6412

BFS NO.

\\bfsn\241\Jobs5\641200.0000\ProDevelopment\Design\Drawings\BRIDGES\06 OVER MICHIGAN STREET\Structure 1901862\1901862_S_BR_BNT01A.dwg Dylon Piercefield Plot:2/24/2020 6:20 AM Save:2/19/2020 9:31 AM

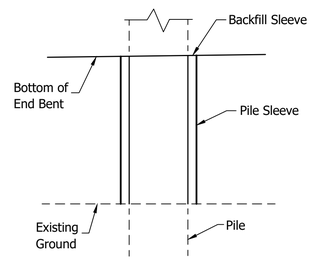

PILE SLEEVE DETAIL

Not to Scale

⊛ As an alternate a ⅞"Φx1'-3" Long Headed Automatic Welded Stud may be used.

⊗ Setting Tolerance of Bottom Plate-Level with to not more than 1/16" below top of Concrete.

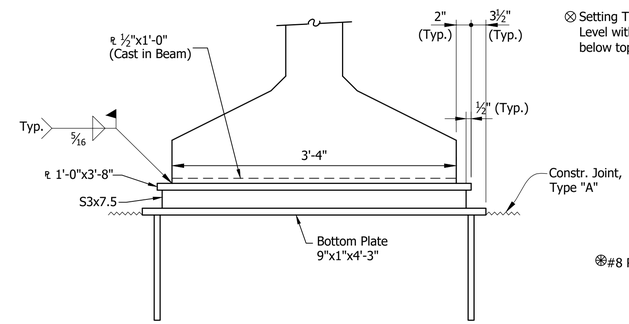

ELEVATION

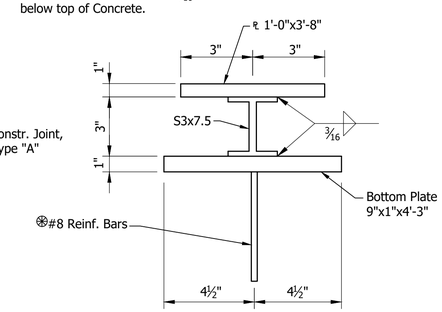

SECTION

BEARING ASSEMBLY

Not to Scale

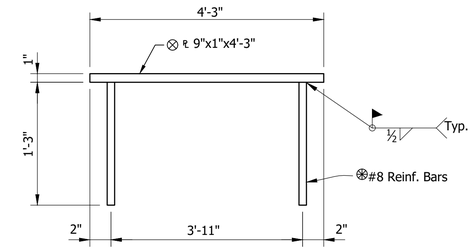

BOTTOM PLATE DETAIL

Not to Scale

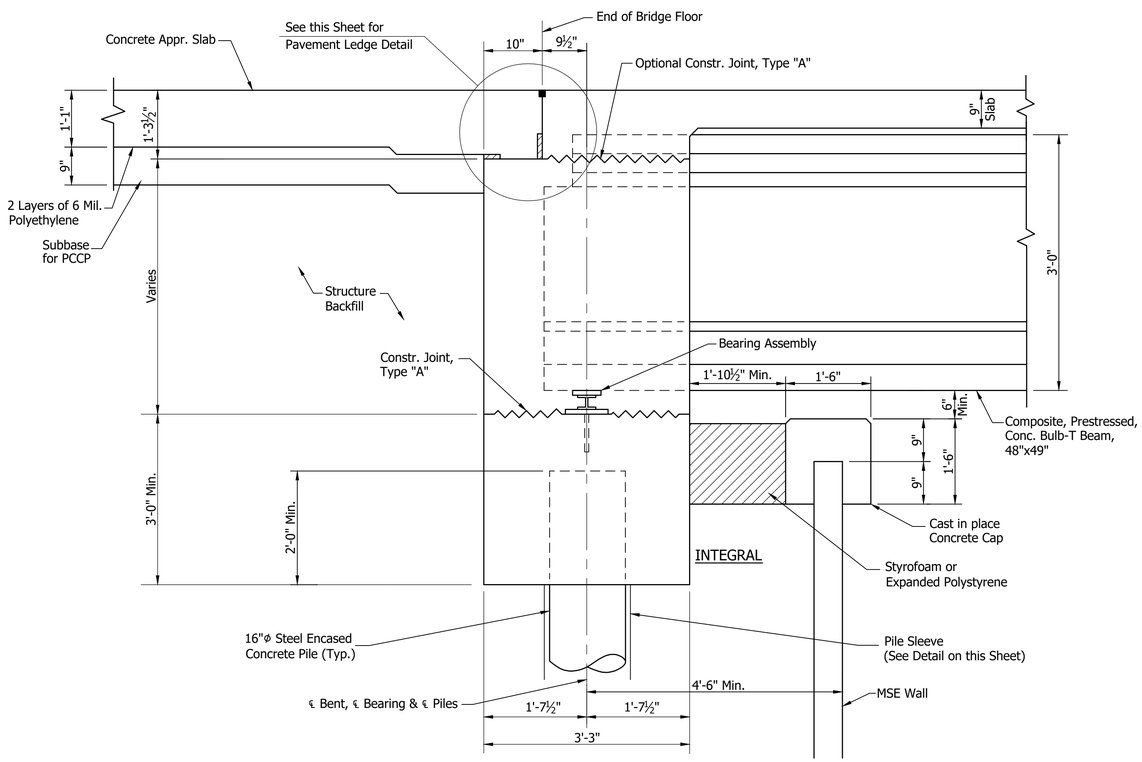

SECTION "B-B"

Not to Scale

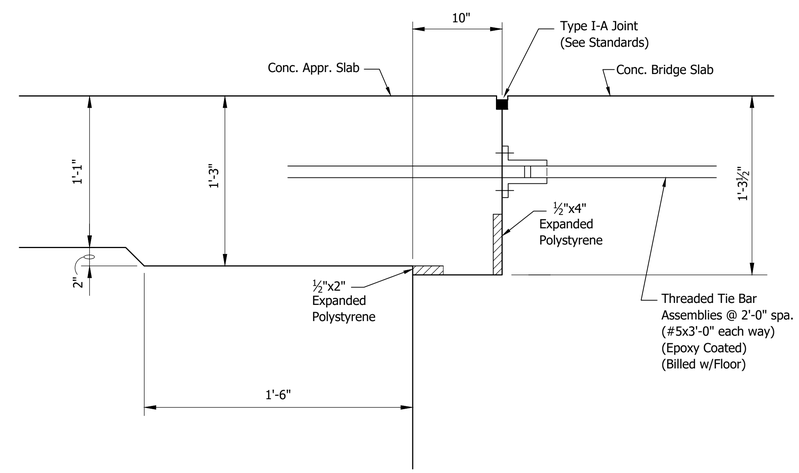

PAVEMENT LEDGE DETAIL

Not to Scale

RECOMMENDED FOR APPROVAL: DESIGN ENGINEER DATE	INDIANA DEPARTMENT OF TRANSPORTATION	HORIZONTAL SCALE: As Noted	BRIDGE FILE: 106-111-10611 CNBL
		VERTICAL SCALE: N/A	DESIGNATION: 1901862
DESIGNED: B. WRIGHT DRAWN: D. SHEETZ	BENTS NO. 1 AND NO. 2 DETAILS	SURVEY BOOK	SHEET
CHECKED: V. SATHIRAJU CHECKED: B. WRIGHT		ELECTRONIC	9 OF 15
		CONTRACT: B-36910	PROJECT: 1600808

6412

BFS NO.

\\bfsnt241\Jobs5\641200.0000\Proj\Development\Design\Drawings\BRIDGES\06 OVER MICHIGAN STREET\Structure 1901862\1901862_S_BR_BNT02 - BENT DETAIL.dwg Dylan Piercefield Plot:2/24/2020 6:20 AM Save:2/19/2020 3:02 PM

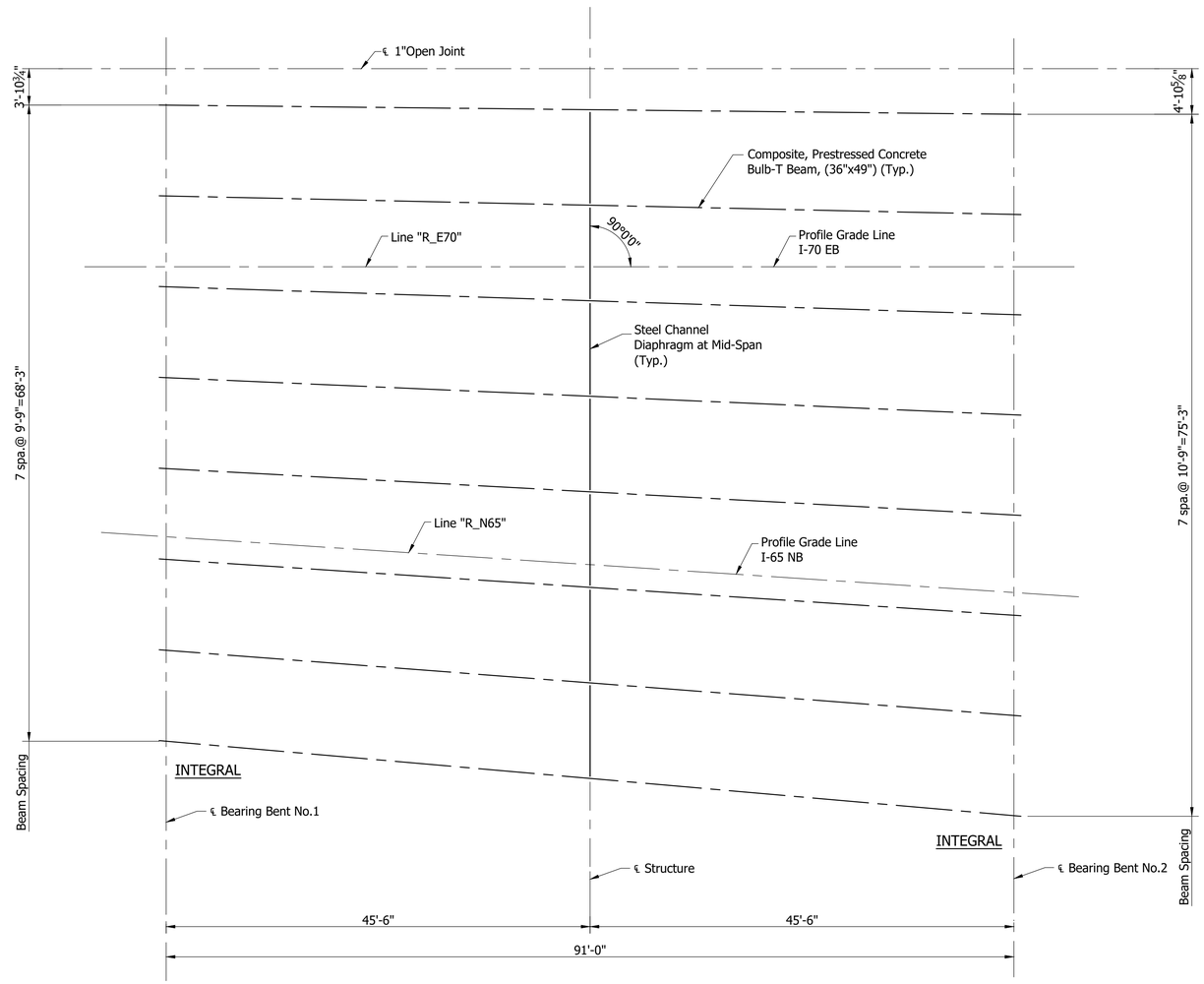

BEAM ERECTION PLAN

Scale: 1/8" = 1'-0"

RECOMMENDED FOR APPROVAL: DESIGN ENGINEER DATE	INDIANA DEPARTMENT OF TRANSPORTATION	HORIZONTAL SCALE: As Noted	BRIDGE FILE: 106-111-10611 CNBL	6412
		VERTICAL SCALE: N/A	DESIGNATION: 1901862	
DESIGNED: V. SATHIRAJU DRAWN: D. SHEETZ	FRAMING PLAN	SURVEY BOOK: ELECTRONIC	SHEET: 10 OF 15	BFS NO.
CHECKED: B. WRIGHT CHECKED: B. WRIGHT		CONTRACT: B-36910	PROJECT: 1600808	

\\bfsn1241\jobs5\641200.0000\ProjDevelopment\Design\Drawings\BRIDGES\06 OVER MICHIGAN STREET\Structure 1901862\1901862_S_BR_FRM01.dwg Dylan Piercefield Plot: 2/24/2020 6:20 AM Save: 12/23/2019 10:21 AM

Notes:
Connect Angles to Beams with
⅞"ø H.S. Bolt with Hardened Washer, (ASTM F436)
Connect Channel to Angles with ⅞"ø H.S. Bolt
with Lock Nut, one Hardened Washer and
2 Washers 3"x5/16"x0'-3" (ASTM F436)

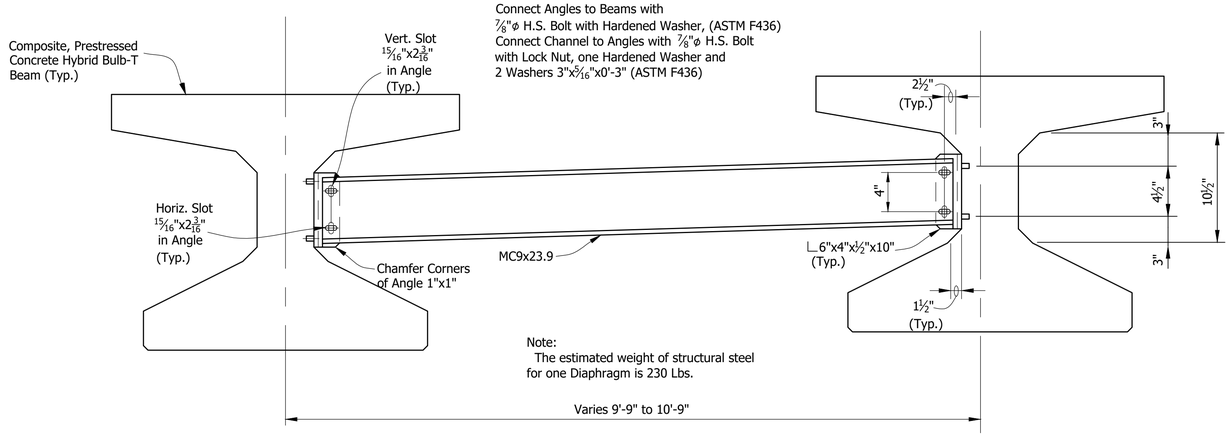

Note:
The estimated weight of structural steel for one Diaphragm is 230 Lbs.

ELEVATION
Not to Scale

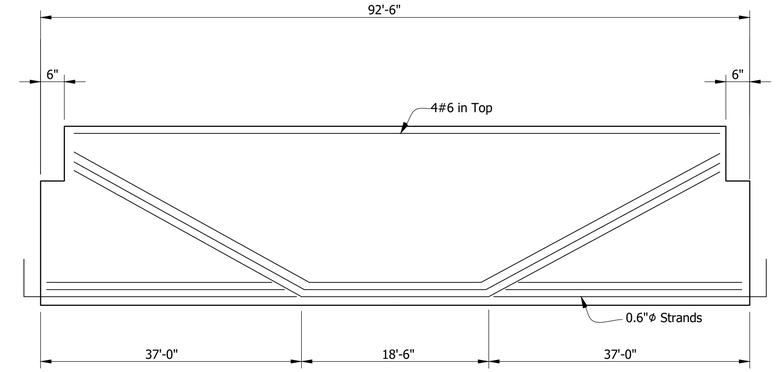

BEAM ELEVATION
SPAN "A"
SHOWING DRAPED STRANDS
Not to Scale

✳ Denotes Epoxy Coated

Note:
Bars 1" Clear unless noted.

1. Surface Seal req'd on top of all Beams and Exterior Face of Exterior Beams
2. 1"ø Holes or ¾"ø Inserts for Dowels at Bent or Pier. (See Beam Plans)
3. PL ½"x12"x3'-2½" at End Bent Ends only

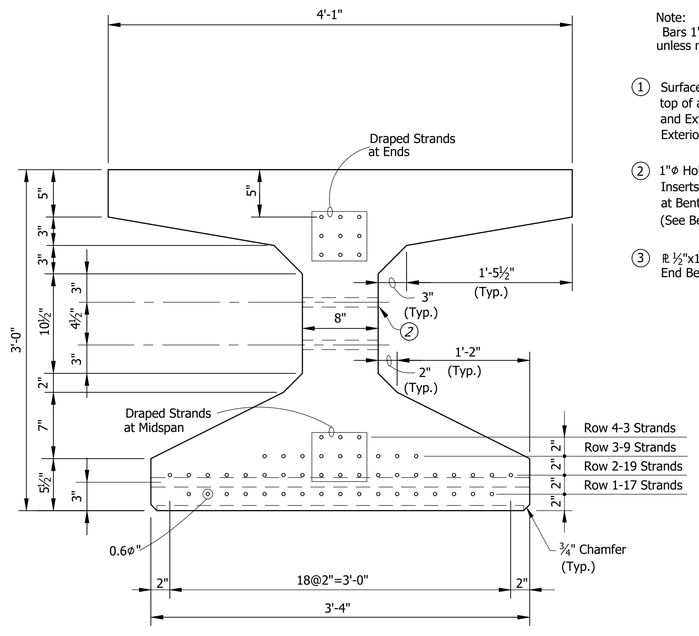

SECTION SHOWING STRANDS

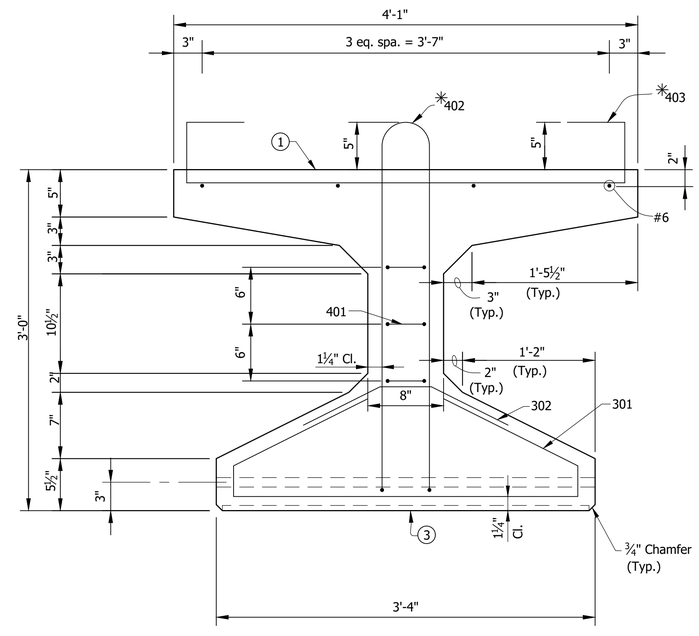

SECTION SHOWING REINFORCING

BEAM SECTIONS
Not to Scale

RECOMMENDED FOR APPROVAL: DESIGN ENGINEER DATE	INDIANA DEPARTMENT OF TRANSPORTATION	HORIZONTAL SCALE: As Noted	BRIDGE FILE: 106-111-10611 CNBL
		VERTICAL SCALE: N/A	DESIGNATION: 1901862
DESIGNED: V. SATHIRAJU DRAWN: D. PIERCEFIELD	BEAM DETAILS	SURVEY BOOK: ELECTRONIC	SHEET: 11 OF 15
CHECKED: B. WRIGHT CHECKED: B. WRIGHT		CONTRACT: B-36910	PROJECT: 1600808

BFS NO. 6412

\\bfsn1241\Jobs5\641200.0000\ProjDevelopment\Design\Drawings\BRIDGES\06 OVER MICHIGAN STREET\Structure 1901862\1901862_S_BR_BMD01.dwg Dylan Piercefield Plot:2/24/2020 6:20 AM Save:11/21/2019 6:46 AM

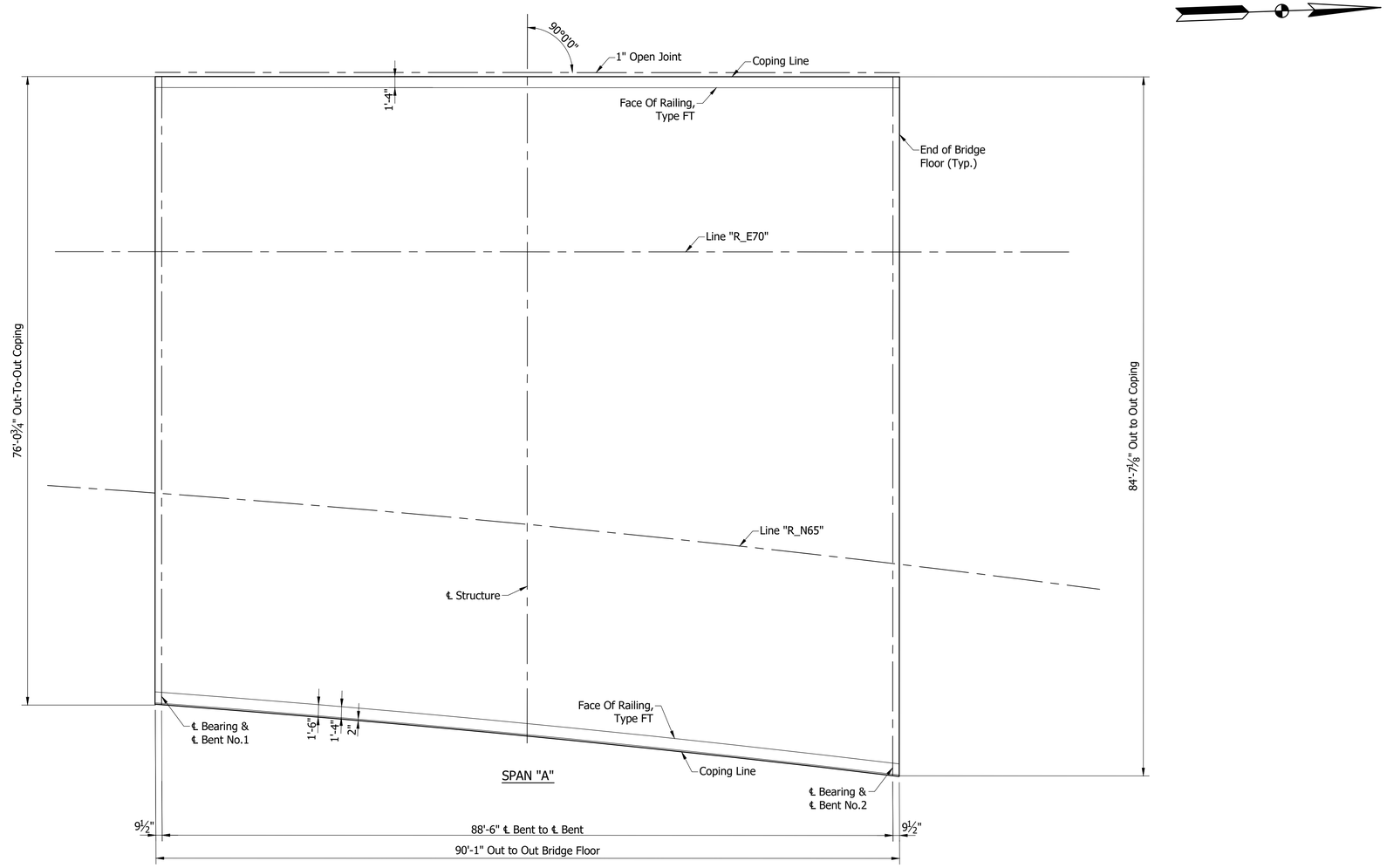

FLOOR PLAN

Scale: 1/8" = 1'-0"

NOTE:
See Sheet ___ For _____

RECOMMENDED FOR APPROVAL: _____ DESIGN ENGINEER _____ DATE	INDIANA DEPARTMENT OF TRANSPORTATION	HORIZONTAL SCALE: As Noted	BRIDGE FILE: 106-111-10611 CNBL	
		VERTICAL SCALE: N/A	DESIGNATION: 1901862	
DESIGNED: V. SATHIRAJU DRAWN: D. PIERCEFIELD	FLOOR DETAILS	SURVEY BOOK: ELECTRONIC	SHEET: 12 OF 15	
CHECKED: B. WRIGHT CHECKED: B. WRIGHT		CONTRACT: B-36910	PROJECT: 1600808	

BFS NO. 6412

\\bfsnt241\jobs5\641200.0000\ProjDevelopment\Design\Drawings\BRIDGES\06 OVER MICHIGAN STREET\Structure 1901862\1901862_S_BR_FLR01.dwg Dylan Piercefield Plot: 2/24/2020 6:21 AM Save: 2/3/2020 6:52 AM

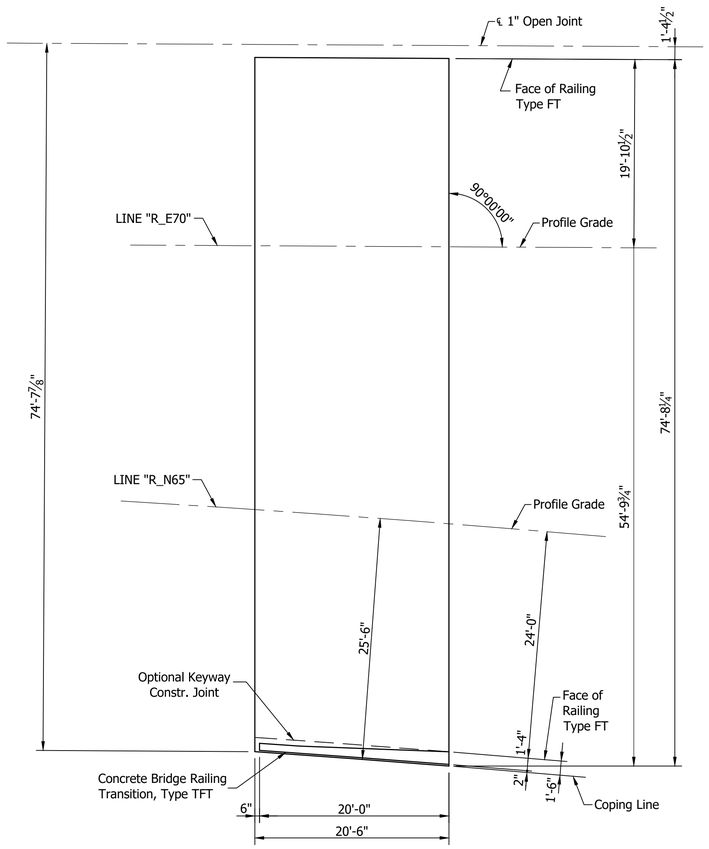

PLAN
SOUTH SLAB
Scale: ⅛"=1'-0"

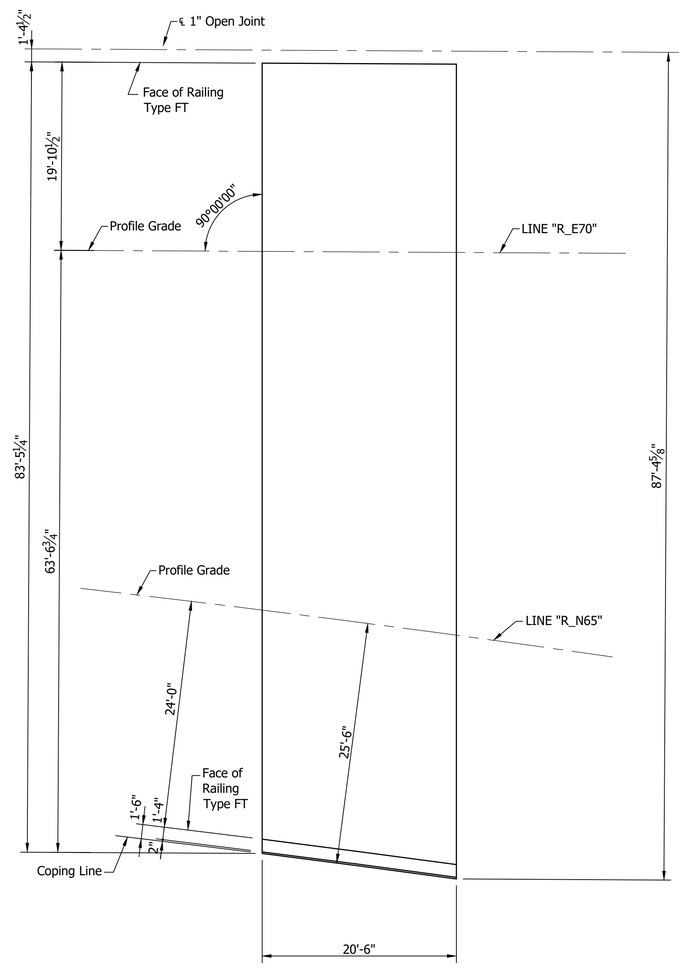

PLAN
NORTH SLAB
Scale: ⅛"=1'-0"

RECOMMENDED FOR APPROVAL: DESIGN ENGINEER DATE	INDIANA DEPARTMENT OF TRANSPORTATION	HORIZONTAL SCALE: As Noted	BRIDGE FILE: 106-111-10611 CNBL
		VERTICAL SCALE: N/A	DESIGNATION: 1901862
DESIGNED: D. SHEETZ DRAWN: D. SHEETZ	APPROACH SLAB	SURVEY BOOK: ELECTRONIC	SHEET: 13 OF 15
CHECKED: B. WRIGHT CHECKED: M. MATEL		CONTRACT: B-36910	PROJECT: 1600808

BFS NO. 6412

\\bfsn1241\jobs5\641200.0000\ProjDevelopment\Design\Drawings\BRIDGES\06 OVER MICHIGAN STREET\Structure 1901862\1901862_S_BR_APS01.dwg Dylan Piercefield Plot:2/24/2020 6:21 AM Save:1/31/2020 7:33 AM

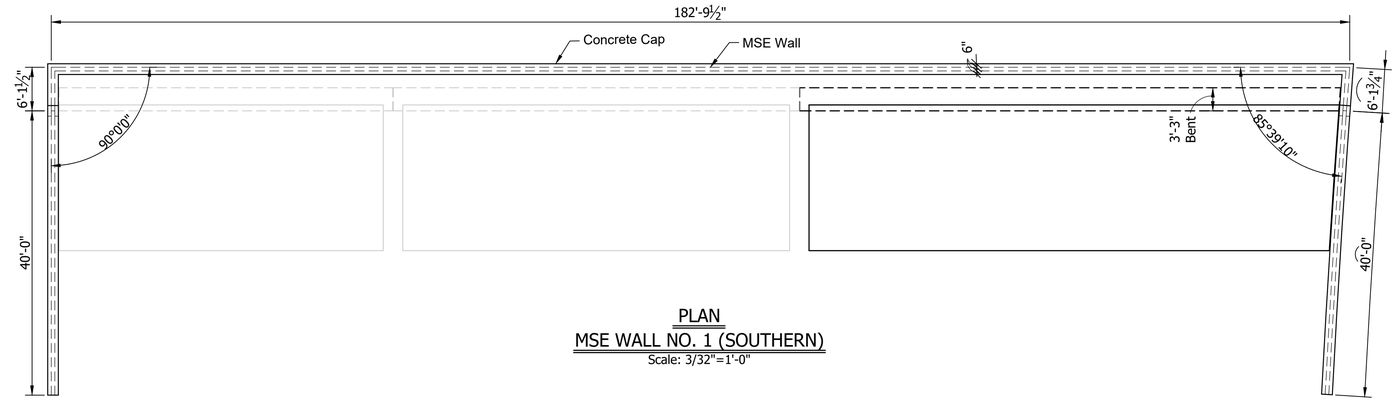

PLAN
MSE WALL NO. 1 (SOUTHERN)
Scale: 3/32"=1'-0"

NOTE:
Elevation Looking At Back Face of Wall

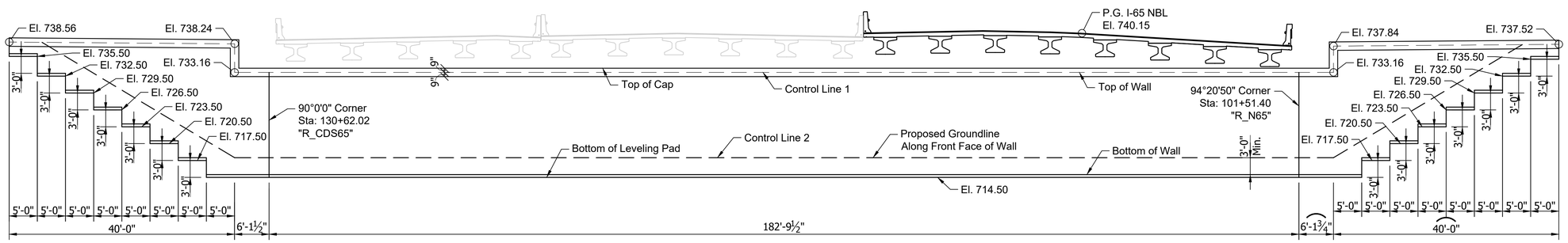

ELEVATION
MSE WALL NO. 1 (SOUTHERN)
Scale: 3/32"=1'-0"

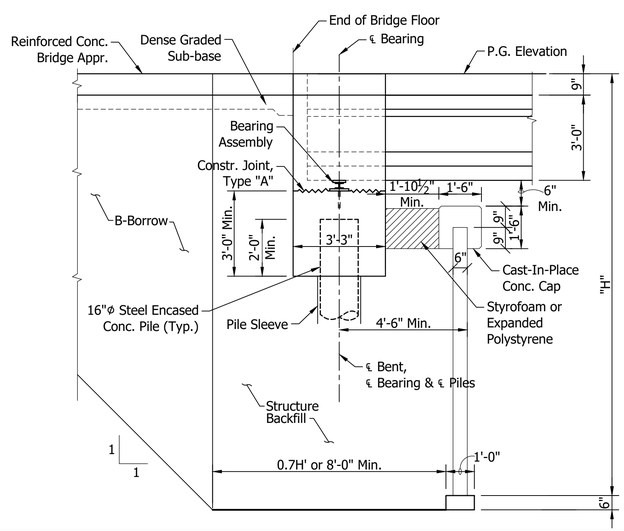

SECTION
MSE WALL NO. 1
Scale: 3/8"=1'-0"

RECOMMENDED FOR APPROVAL: DESIGN ENGINEER DATE	INDIANA DEPARTMENT OF TRANSPORTATION	HORIZONTAL SCALE: AS NOTED	BRIDGE FILE: 106-111-10611 CNBL	
		VERTICAL SCALE: AS NOTED	DESIGNATION: 1901862	
DESIGNED: B. WRIGHT DRAWN: D. PIERCEFIELD	WALL LAYOUT	SURVEY BOOK: ELECTRONIC	SHEET: 14 OF 15	6412
CHECKED: M. EICHENAUER CHECKED: B. WRIGHT		CONTRACT: B-36910	PROJECT: 1600808	BFS NO.

\\bfsnt241\Jobs5\641200.0000\ProjDevelopment\Design\Drawings\BRIDGES\06 OVER MICHIGAN STREET\Structure 1901862\1901862_S_BR_WL01.dwg Dylan Piercefield Plot: 2/24/2020 6:21 AM Save: 2/19/2020 9:14 AM

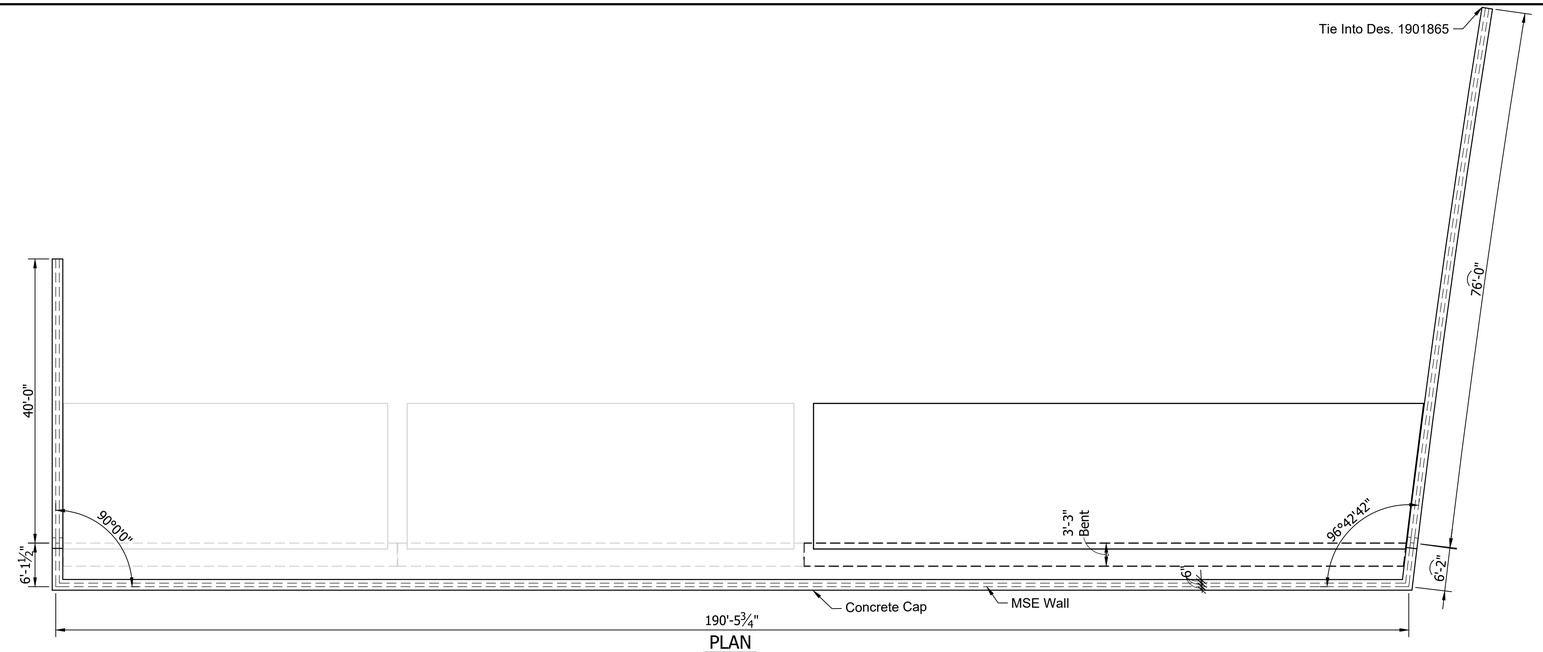

PLAN
MSE WALL NO. 2 (NORTHERN)
Scale: 3/32"=1'-0"

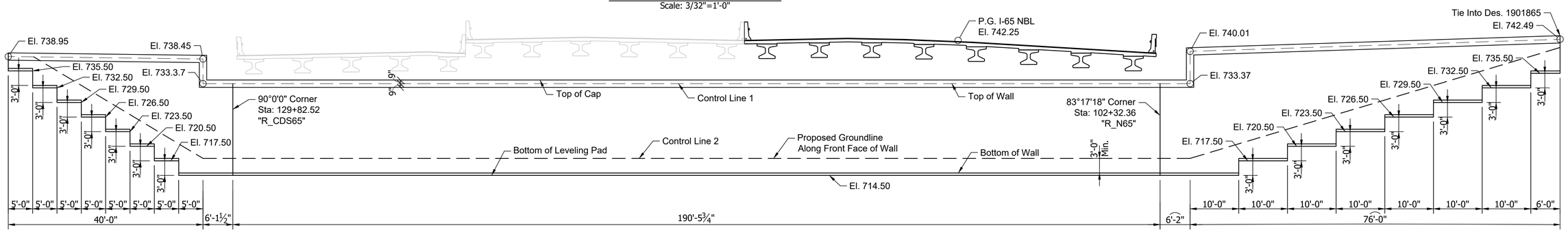

ELEVATION
MSE WALL NO. 2 (NORTHERN)
Scale: 3/32"=1'-0"

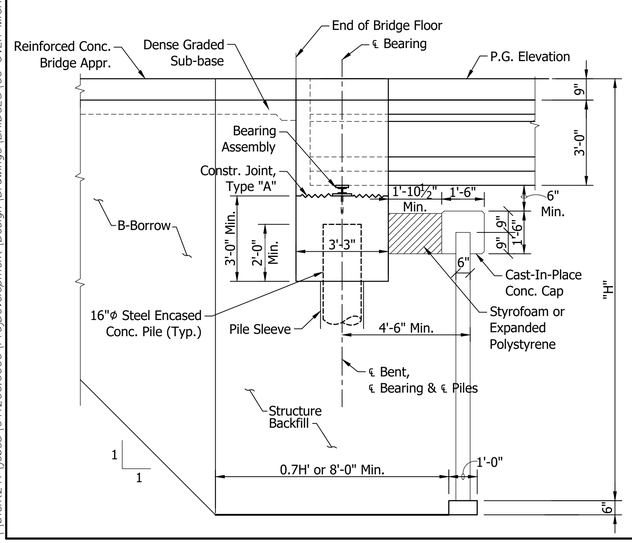

SECTION
MSE WALL NO. 2
Scale: 3/8"=1'-0"

RECOMMENDED FOR APPROVAL: _____ DESIGN ENGINEER DATE	INDIANA DEPARTMENT OF TRANSPORTATION	HORIZONTAL SCALE: As Noted	BRIDGE FILE: 106-111-10611 CNBL	
		VERTICAL SCALE: N/A	DESIGNATION: 1901862	
DESIGNED: B. WRIGHT DRAWN: D. PIERCEFIELD	WALL LAYOUT	SURVEY BOOK: ELECTRONIC	SHEET: 15 OF 15	
CHECKED: M. EICHENAUER CHECKED: B. WRIGHT		CONTRACT: B-36910	PROJECT: 1600808	

BFS NO. 6412

\\bfsn1241\jobs5\641200.0000\Pro_Development\Design\Drawings\BRIDGES\06 OVER MICHIGAN STREET\Structure 1901862\901862_S_BR_WL102.dwg Dylan Piercefield Plot: 2/24/2020 6:21 AM Save: 2/19/2020 9:15 AM

PROJECT	DESIGNATION
1600808	1901863
CONTRACT	BRIDGE FILE
B-36910	I65-111-10612 BSBL

STRUCTURE INFORMATION

STRUCTURE	TYPE	SPAN & SKEW	OVER	STATION
I65-111-10612 BSBL	PRESTRESSED COMPOSITE CONCRETE BULB-TEE BEAM BRIDGE	1 SPAN: 88'-6" SKEW: NO SKEW	MICHIGAN STREET	153+87.01 LINE "R_S65"

INDIANA DEPARTMENT OF TRANSPORTATION

TRAFFIC DATA	I-65 / I-70 S.B.	I-70 E.B.	MICHIGAN STREET
A.D.T. (2021)	58,288 V.P.D.	41,522 V.P.D.	5,859 V.P.D.
A.D.T. (2041)	64,063 V.P.D.	49,972 V.P.D.	18,483 V.P.D.
D.H.V. (2041)	5,125 V.P.H.	4,335 V.P.H.	1,492 V.P.H.
DIRECTIONAL DISTRIBUTION	100 %	100 %	55 %
TRUCKS	10 % D.H.V.	15 % D.H.V.	6 % D.H.V.
DESIGN DATA			
DESIGN SPEED	55 M.P.H.	50 M.P.H.	30 M.P.H.
PROJECT DESIGN CRITERIA	4R (FREEWAY)		N/A
FUNCTIONAL CLASSIFICATION	URBAN FREEWAY		MINOR ARTERIAL
RURAL/URBAN	URBAN (BUILT-UP)		URBAN (BUILT-UP)
TERRAIN	LEVEL		LEVEL
ACCESS CONTROL	FULL CONTROL		FULL

BRIDGE PLANS

FOR SPANS OVER 20 FEET

ROUTE: I-65 / I-70 S.B. AT: RP 111+69

PROJECT NO. 1600808 P.E.

1600808 CONST.

NO ADDITIONAL RIGHT OF WAY REQUIRED FOR THIS PROJECT

BRIDGE REPLACEMENT ON I-65 / I-70 S.B. OVER MICHIGAN STREET
LOCATED 1.39 MILES NORTH OF I-70 (SOUTH SPLIT) INTERCHANGE
SECTION 1, TOWNSHIP 15 NORTH, RANGE 3 EAST
CENTER TOWNSHIP, MARION COUNTY INDIANA

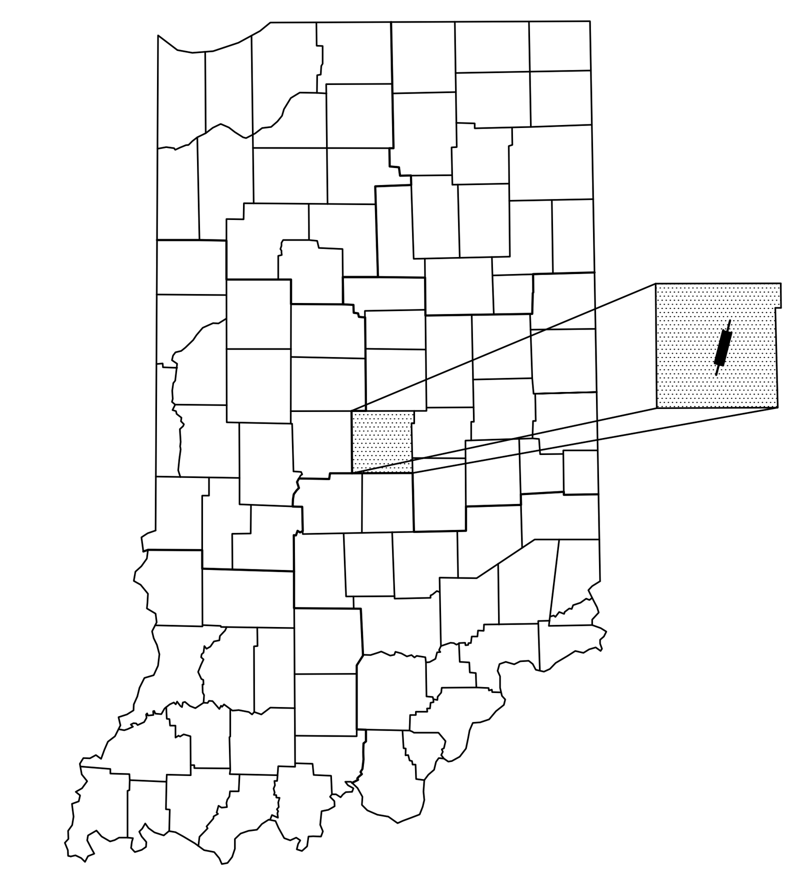

PROJECT LOCATION SHOWN BY

LATITUDE: 39°46'26" N LONGITUDE: 86°08'33" W

BRIDGE LENGTH :	0.018 MI.
ROADWAY LENGTH :	SEE ROAD PLANS
TOTAL LENGTH :	SEE ROAD PLANS
MAX GRADE :	2.25%

HUC: 05120201130020

END PROJECT No. 1600808
STATION 25+75.00 LINE "P_ALG_I65"

END PROJECT No. 1600808
STATION 41+85.70 LINE "P_ALG_I70"

R. 3 E. | R. 4 E.

T. 16 N.

T. 15 N.

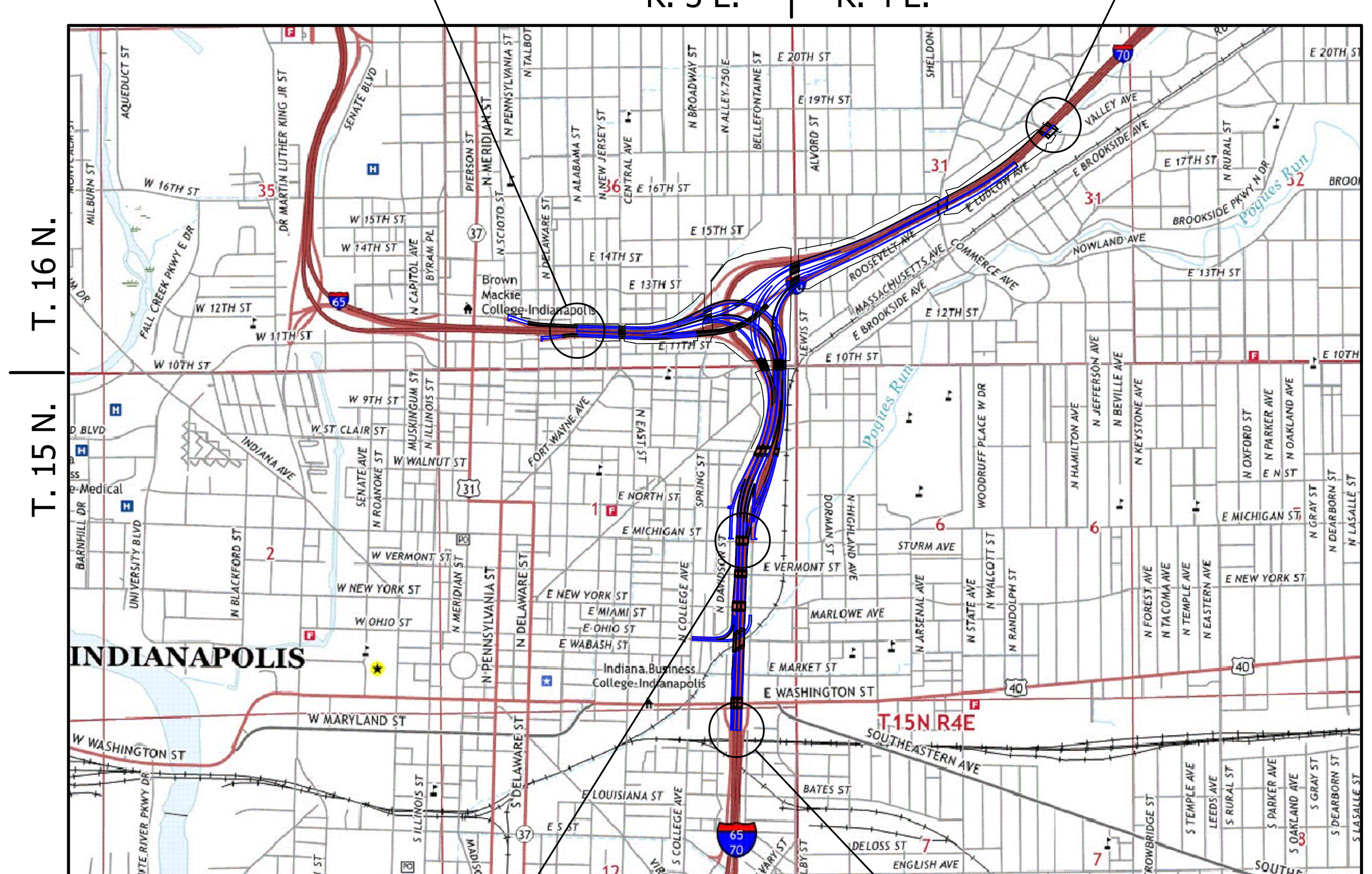

SCALE: 1" = 2000'

PROJECT LOCATION
BRIDGE FILE No. I65-111-10612 BSBL
I-65 / I-70 S.B. OVER MICHIGAN STREET
STA. 153+87.01 LINE "R_S65"

LOCATION MAP
MARION COUNTY

BEGIN PROJECT No. 1600808
STATION 113+00.00 LINE "P_ALG_I65/I70"

INDIANA DEPARTMENT OF TRANSPORTATION STANDARD SPECIFICATIONS DATED 2020 TO BE USED WITH THESE PLANS.

SUPERIOR CONSTRUCTION

PLANS PREPARED BY: Butler Fairman and Seufert Inc. (317)713-4615 PHONE

CERTIFIED BY: #/#/# DATE

APPROVED FOR LETTING: #/#/# DATE
INDIANA DEPARTMENT OF TRANSPORTATION

BRIDGE FILE	
I65-111-10612 BSBL	
DESIGNATION	
1901863	
SURVEY BOOK	SHEET
ELECTRONIC	1 OF 14
CONTRACT	PROJECT
B-36910	1600808

6412

\\bfsnt241\Jobs5\641200.0000\ProjDevelopment\Design\Drawings\BRIDGES\06 OVER MICHIGAN STREET\Structure 1901863\Structure 1901863_S_BR_TTL01.dwg Dylan Piercefield Plot: 2/24/2020 6:23 AM Save: 2/21/2020 10:52 AM

UTILITIES

REVISIONS

SHEET NO.	DATE	REVISED

KIN PROJECT INFORMATION

DESIGNATION	PROJECT DESCRIPTION	
1600808	COMPLETE ROAD RECONSTRUCTION OF I-65/I-70 FROM WASHINGTON STREET TO I-65 OVER DELAWARE STREET AND I-70 OVER VALLEY AVENUE	LEAD DES
1901935	ITS FOR I-65/I-70 FROM WASHINGTON STREET TO I-65 OVER DELAWARE STREET AND I-70 OVER VALLEY AVENUE	
1901936	SIGNS, LIGHTING, SIGNALS AND MARKING FOR I-65/I-70 FROM WASHINGTON STREET TO I-65 OVER DELAWARE STREET AND I-70 OVER VALLEY AVENUE	
1901847	BRIDGE REPLACEMENT ON I-65/I-70 NB OVER WASHINGTON STREET	
1901848	BRIDGE REPLACEMENT ON I-65/I-70 SB OVER WASHINGTON STREET	
1901849	BRIDGE REPLACEMENT ON I-65/I-70 SB CD OVER WASHINGTON STREET	
1901850	BRIDGE REPLACEMENT ON I-65/I-70 NB OVER MARKET STREET	
1901851	BRIDGE REPLACEMENT ON I-65/I-70 SB OVER MARKET STREET	
1901852	BRIDGE REPLACEMENT ON I-65/I-70 SB CD OVER MARKET STREET	
1901853	BRIDGE REPLACEMENT ON I-65/I-70 NB OVER CSX RAILROAD & OHIO STREET	
1901854	BRIDGE REPLACEMENT ON I-65/I-70 SB OVER CSX RAILROAD & OHIO STREET	
1901855	BRIDGE REPLACEMENT ON I-65/I-70 SB CD OVER CSX RAILROAD & OHIO STREET	
1901856	BRIDGE REPLACEMENT ON I-65/I-70 NB OVER NEW YORK STREET	
1901857	BRIDGE REPLACEMENT ON I-65/I-70 SB OVER NEW YORK STREET	
1901858	BRIDGE REPLACEMENT ON I-65/I-70 SB CD OVER NEW YORK STREET	
1901861	BRIDGE REPLACEMENT ON I-65/I-70 SB CD OVER VERMONT STREET	
1901862	BRIDGE REPLACEMENT ON I-65 NB & I-70 EB OVER MICHIGAN STREET	
1901863	BRIDGE REPLACEMENT ON I-65 SB/I-70 WB OVER MICHIGAN STREET	
1901864	BRIDGE REPLACEMENT ON I-65/I-70 SB CD OVER MICHIGAN STREET	
1901865	BRIDGE REPLACEMENT ON I-65 NB OVER I-70 EB ENTRANCE RAMP	
1901881	BRIDGE REPLACEMENT ON I-65 NB OVER ST. CLAIR STREET	
1901889	NEW BRIDGE CONSTRUCTION ON I-70 EB OVER ST. CLAIR STREET	
1901892	BRIDGE REPLACEMENT ON I-65 SB/I-70 WB OVER ST. CLAIR STREET	
1901896	NEW BRIDGE CONSTRUCTION ON SB CD OVER ST. CLAIR STREET	
1901897	BRIDGE REPLACEMENT ON I-65 NB OVER EAST 10TH STREET	
1901899	NEW BRIDGE CONSTRUCTION ON I-70 EB OVER EAST 10TH STREET	
1901901	BRIDGE REPLACEMENT ON I-65 SB OVER EAST 10TH STREET	
1901903	BRIDGE REPLACEMENT ON I-70 WB OVER EAST 10TH STREET	
1901905	NEW BRIDGE CONSTRUCTION ON SB CD & RAMP OVER EAST 10TH STREET	
1901906	NEW BRIDGE CONSTRUCTION ON I-65 NB CD EXIT RAMP OVER CENTRAL AVENUE	
1901907	BRIDGE REPLACEMENT ON I-65 NB OVER CENTRAL AVENUE	
1901908	BRIDGE REPLACEMENT ON I-65 SB OVER CENTRAL AVENUE	
1901909	NEW BRIDGE CONSTRUCTION ON I-65 SB CD ENTRANCE RAMP OVER CENTRAL AVE.	
1901914	BRIDGE REPLACEMENT ON I-70 WB TO I-65 NB OVER COLLEGE AVENUE	
1901915	BRIDGE REPLACEMENT ON I-65 NB & PENNSYLVANIA EXIT RAMP OVER COLLEGE AVENUE	
1901917	BRIDGE REPLACEMENT ON I-65 SB & SB CD RAMP OVER COLLEGE AVENUE	
1901918	BRIDGE REPLACEMENT ON I-65 SB & DELAWARE ENTRANCE RAMP TO I-70 EB OVER COLLEGE AVENUE & FIVE RAMPS	
1901919	BRIDGE REPLACEMENT ON I-65 NB OVER I-70 WB & RAMP	
1901920	BRIDGE REPLACEMENT ON I-70 WB TO I-65 NB OVER THREE RAMPS	
1901921	BRIDGE REPLACEMENT ON I-65 SB OVER I-70 WB & SB CD RAMP	
1901922	NEW BRIDGE CONSTRUCTION ON I-70 EB OVER I-65 NB	
1901923	BRIDGE REPLACEMENT ON I-70 WB & SB CD OVER LEWIS STREET & MONON TRAIL	
1901925	NEW BRIDGE CONSTRUCTION ON I-70 WB TO I-65 NB OVER LEWIS STREET & MONON TRAIL	
1901927	NOT USED	
1901928	BRIDGE REPLACEMENT ON I-70 EB OVER LEWIS STREET & MONON TRAIL	
1901929	PREVENTATIVE MAINTENANCE ON I-70 WB OVER ROOSEVELT AT COMMERCE AVENUE	
1901930	PREVENTATIVE MAINTENANCE ON I-70 EB OVER ROOSEVELT AT COMMERCE AVENUE	
1901931	PREVENTATIVE MAINTENANCE ON I-70 WB OVER VALLEY AVENUE	
1901932	PREVENTATIVE MAINTENANCE ON I-70 EB OVER VALLEY AVENUE	
1901933	REHABILITATE AND WIDEN ON I-65 OVER 7 STREETS, ACCESS RD, MONORAIL (AKA "MONSTER BRIDGE") - PENNSYLVANIA EXIT RAMP	
1901934	REHABILITATE AND WIDEN ON I-65 OVER 7 STREETS, ACCESS RD, MONORAIL (AKA "MONSTER BRIDGE") - DELAWARE ENTRANCE RAMP	
1902179	BRIDGE REPLACEMENT ON I-65 NB/I70 EB OVER VERMONT STREET	
1902180	BRIDGE REPLACEMENT ON I-65 SB/I70 WB OVER VERMONT STREET	

INDEX

SHEET NO.	DESIGNATION
1	TITLE
2	INDEX
3	MAINTENANCE OF TRAFFIC
4	LAYOUT
5	GENERAL PLAN - PLAN & ELEVATION VIEWS
6	GENERAL PLAN - TYPICAL SECTION
7	BENTS NO. 1 AND NO. 2 DETAILS
8	BENTS NO. 1 AND NO. 2 DETAILS
9	FRAMING PLAN
10	BEAM DETAILS
11	FLOOR DETAILS
12	APPROACH SLAB
13	WALL LAYOUT
14	WALL LAYOUT

RECOMMENDED FOR APPROVAL: _____ DESIGN ENGINEER #/#/# DATE

DESIGNED: B. WRIGHT DRAWN: K. COFFMAN

CHECKED: M. EICHENAUER CHECKED: B. WRIGHT

INDIANA
DEPARTMENT OF TRANSPORTATION

INDEX

HORIZONTAL SCALE	BRIDGE FILE
N/A	I65-111-10612 BSBL
VERTICAL SCALE	DESIGNATION
N/A	1901863
SURVEY BOOK	SHEET
ELECTRONIC	2 OF 14
CONTRACT	PROJECT
B-36910	1600808

BPS NO. 6412

\\bfsn1241\Jobs5\641200.0000\ProjDevelopment\Design\Drawings\BRIDGES\06 OVER MICHIGAN STREET\Structure 1901863\1901863_S_BR_IND01.dwg Dylan Piercefield Plot: 2/24/2020 6:23 AM Save: 2/18/2020 11:24 AM

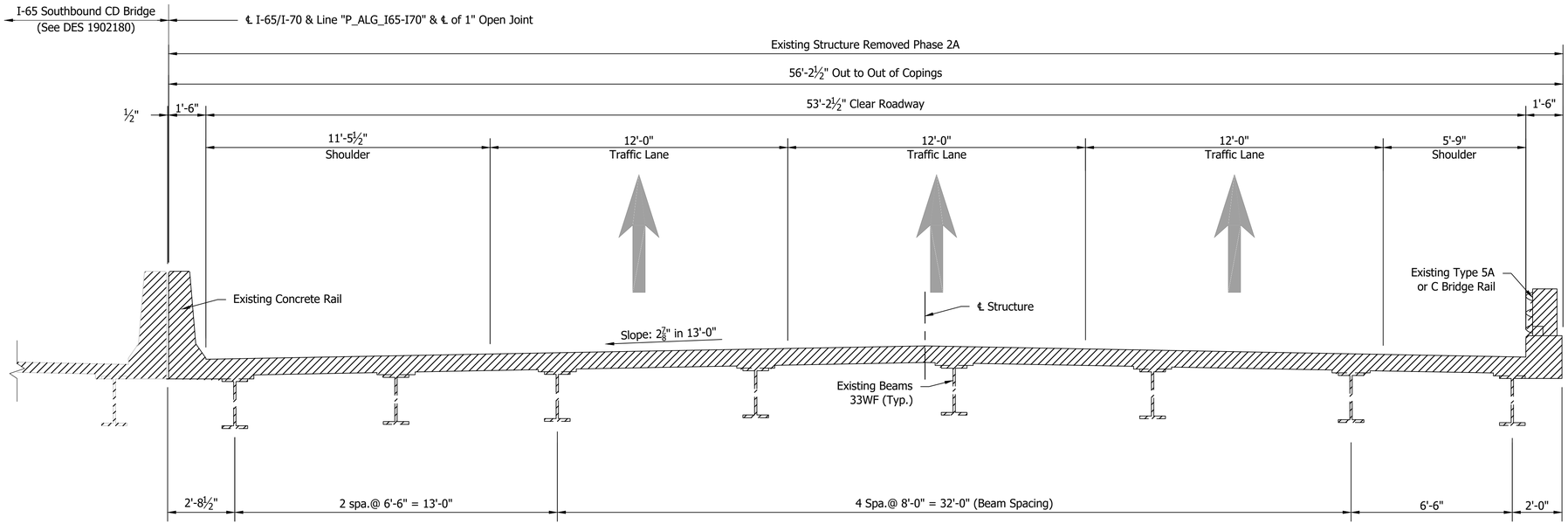

EXISTING SOUTHBOUND TYPICAL SECTION

Scale: 3/8"=1'-0"

LEGEND

Limits of Removal

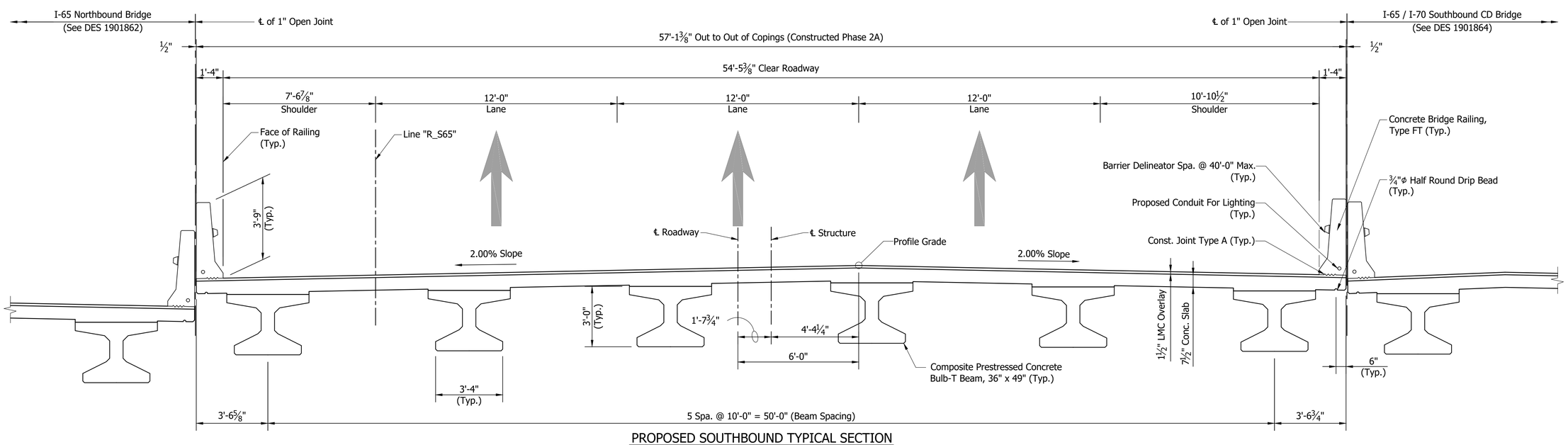

PROPOSED SOUTHBOUND TYPICAL SECTION

Scale: 3/8"=1'-0"

RECOMMENDED FOR APPROVAL: _____ DESIGN ENGINEER DATE	INDIANA DEPARTMENT OF TRANSPORTATION	HORIZONTAL SCALE: As Noted	BRIDGE FILE: I65-111-10612 BSBL
		VERTICAL SCALE: N/A	DESIGNATION: 1901863
DESIGNED: V. SATHIRAJU DRAWN: D. PIERCEFIELD	MAINTENANCE OF TRAFFIC	SURVEY BOOK: ELECTRONIC	SHEET: 3 OF 14
CHECKED: B. WRIGHT CHECKED: B. WRIGHT		CONTRACT: B-36910	PROJECT: 1600808

BFS NO. 6412

\\vfsnt241\Jobs5\641200.0000\Proj_Development\Design\Drawings\BRIDGES\06_OVER_MICHIGAN_STREET\Structure_1901863\1901863_S_BR_MOT01.dwg Dylan Piercefield Plot:2/24/2020 6:23 AM Save:2/6/2020 6:01 AM

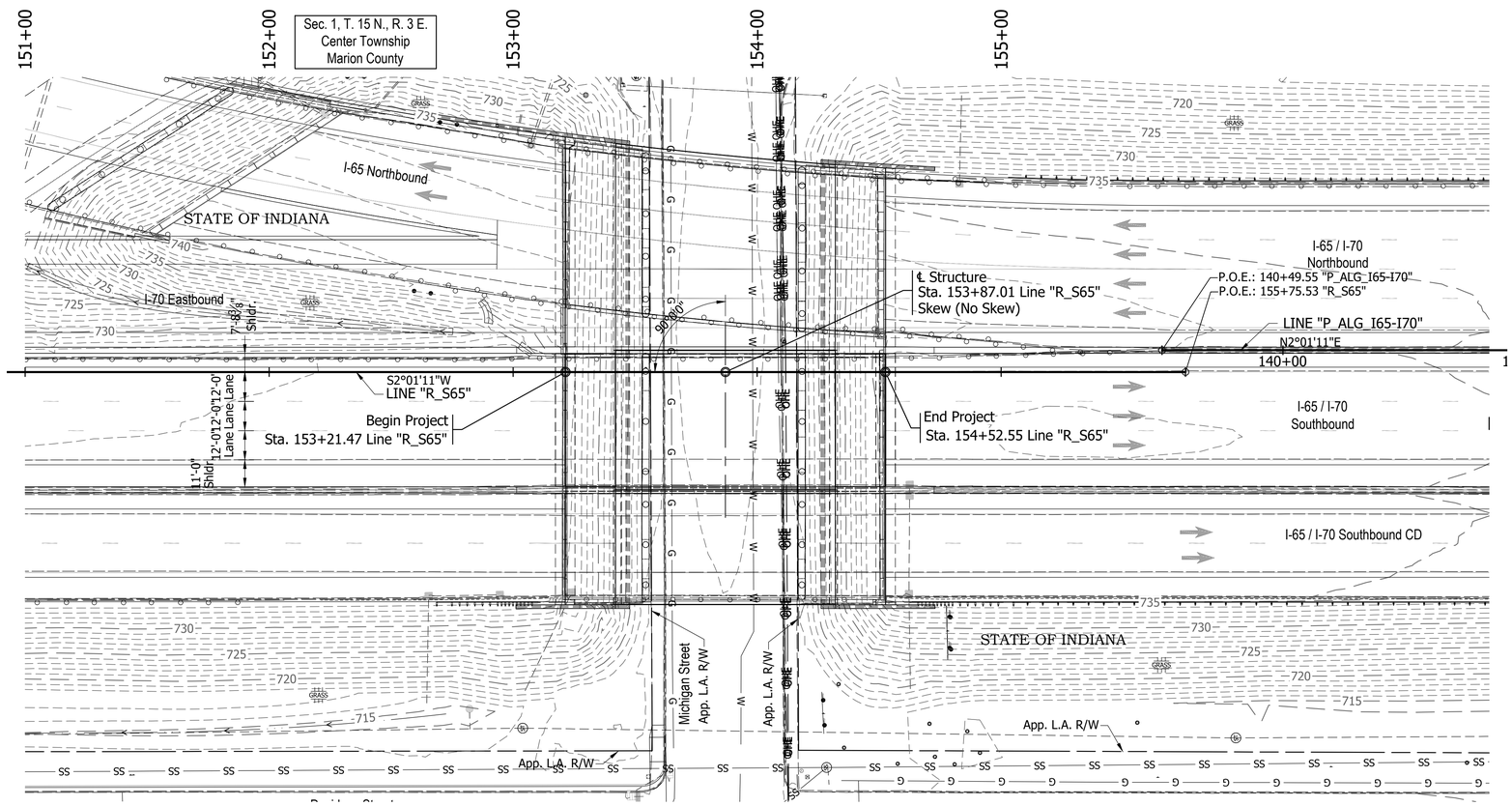

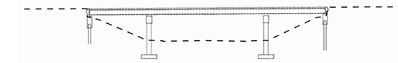

EXISTING STRUCTURE

The existing structure was built in 1974. Structure was rehabilitated in 2003. The structure is a 3-span continuous composite 33" WF steel beam.

Span lengths: 1 @ 33'-0", 1 @ 64'-0", 1 @ 33'-0"

Clear roadway 53'-2 ½". Total length of 133'-6"

Existing structure to be removed.

Existing plans are on file with the Indiana Department of Transportation under Bridge File No. I-65-112-5733 & I-65-112-5733A.

EARTHWORK TABULATION

See Roadway Plans (DES #_____) for earthwork tabulation.

NOTE: ALL TOPOGRAPHY INFORMATION REFERENCED TO LINE "R_S65" UNLESS NOTED.

ALL R/W ON THIS SHEET DESCRIBED FROM LINE "R_S65" UNLESS OTHERWISE NOTED

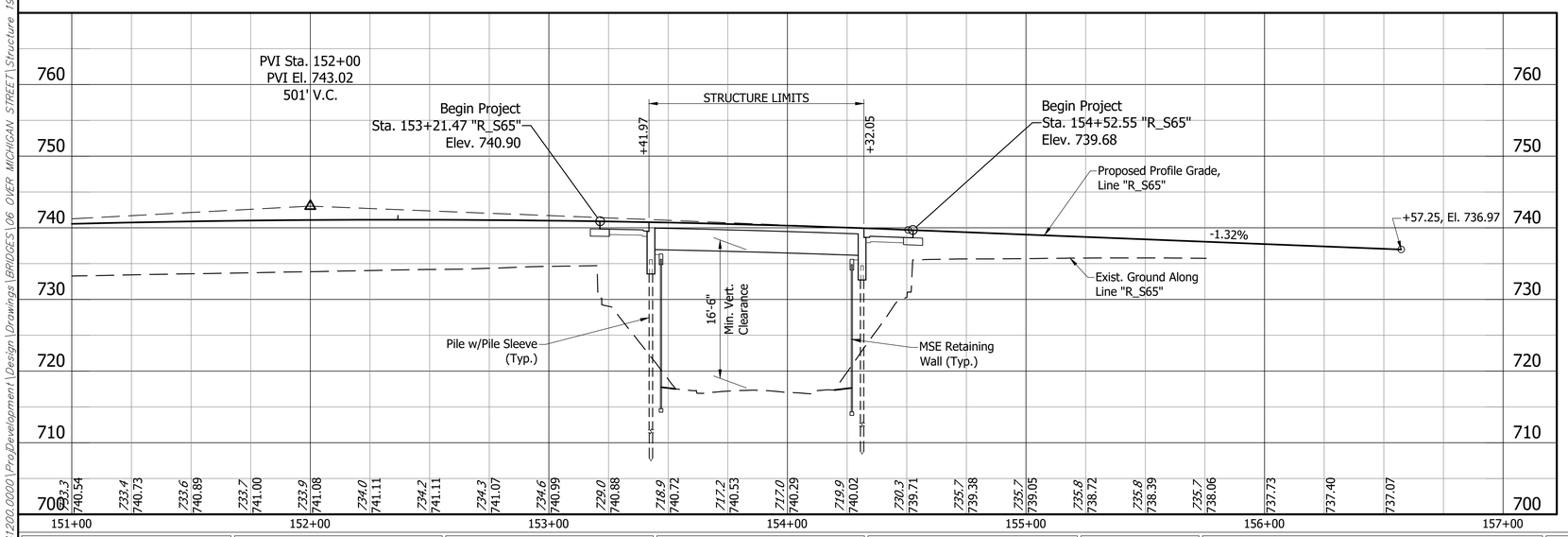

Notes:

1. For R/W and property information, see Location Control Route Survey (DES # _____).
2. For alignment data, see Geometric Layout Sheets (DES #_____).
3. See Road Plans (DES #_____) for Horizontal & Vertical Control Data.

PRESTRESSED COMPOSITE CONCRETE BULB-TEE BEAM BRIDGE
1 SPAN: 88'-6"
54'-5 3/8" CLEAR ROADWAY; SKEW: NO SKEW
I-65 / I-70 S.B. OVER MICHIGAN STREET
MARION COUNTY

RECOMMENDED FOR APPROVAL: _____ DESIGN ENGINEER #/#/# DATE

DESIGNED: B. WRIGHT DRAWN: L. KIRSCH
CHECKED: M. EICHENAUER CHECKED: B. WRIGHT

INDIANA
DEPARTMENT OF TRANSPORTATION

LAYOUT

HORIZONTAL SCALE	BRIDGE FILE
1" = 30'	I65-111-10612 BSBL
VERTICAL SCALE	DESIGNATION
1" = 10'	1901863
SURVEY BOOK	SHEET
ELECTRONIC	4 OF 14
CONTRACT	PROJECT
B-36910	1600808

BFS NO. 6412

\\bfsn1241\Jobs5\641200.0000\ProjDevelopment\Design\Drawings\BRIDGES\06 OVER MICHIGAN STREET\Structure 1901863\1901863_S_BR_LA101.dwg Dylan Piercefield Plot: 2/24/2020 8:19 AM Save: 2/24/2020 8:17 AM

STRUCTURE TO BE BUILT ON A 2.25% GRADE AND 500' VERTICAL CURVE

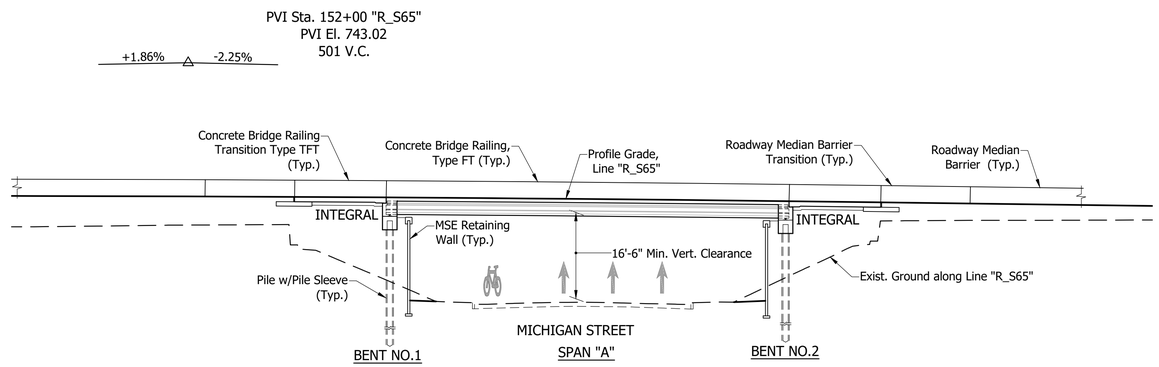

ELEVATION

Scale: 1/8" = 1'-0"

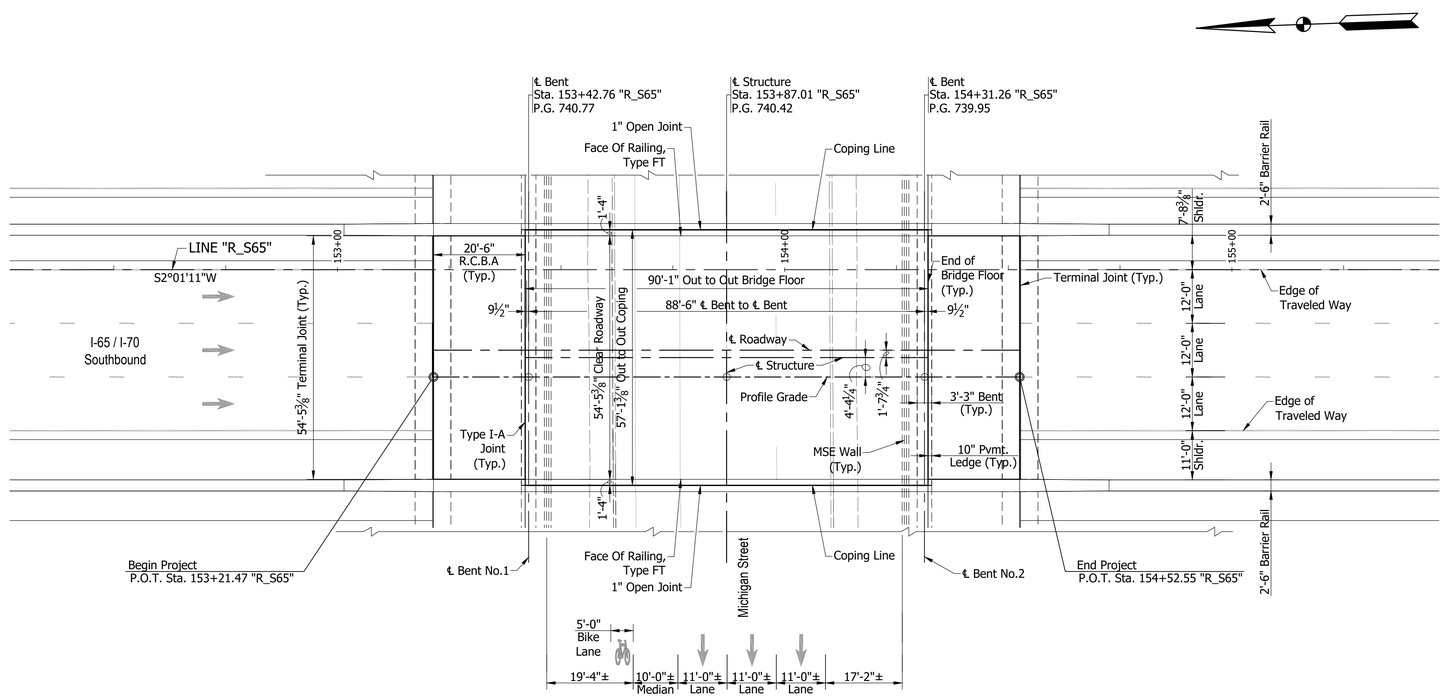

PLAN

Scale: 1/8" = 1'-0"

NOTE:
See Sheet 6 For Typical Section

PRESTRESSED COMPOSITE CONCRETE
BULB-TEE BEAM BRIDGE
1 SPAN: 88'-6"
54'-5 3/8" CLEAR ROADWAY; SKEW: NO SKEW
I-65 / I-70 S.B. OVER MICHIGAN STREET
MARION COUNTY

RECOMMENDED FOR APPROVAL: DESIGN ENGINEER #/#/# DATE	INDIANA DEPARTMENT OF TRANSPORTATION	HORIZONTAL SCALE: As Noted	BRIDGE FILE: I65-111-10612 BSBL	6412
		VERTICAL SCALE: N/A	DESIGNATION: 1901863	
DESIGNED: B. WRIGHT DRAWN: L. KIRSCH	GENERAL PLAN - PLAN & ELEVATION VIEWS	SURVEY BOOK: ELECTRONIC	SHEET: 5 OF 14	BFS NO.
CHECKED: M. EICHENAUER CHECKED: B. WRIGHT		CONTRACT: B-36910	PROJECT: 1600808	

\\dsn1241\Jobs5\641200.0000\ProDevelopment\Design\Drawings\BRIDGES\06 OVER MICHIGAN STREET\Structure 1901863\1901863_S_BR_PLN01.dwg Dylan Piercefield Plot:2/24/2020 8:19 AM Save:2/24/2020 8:18 AM

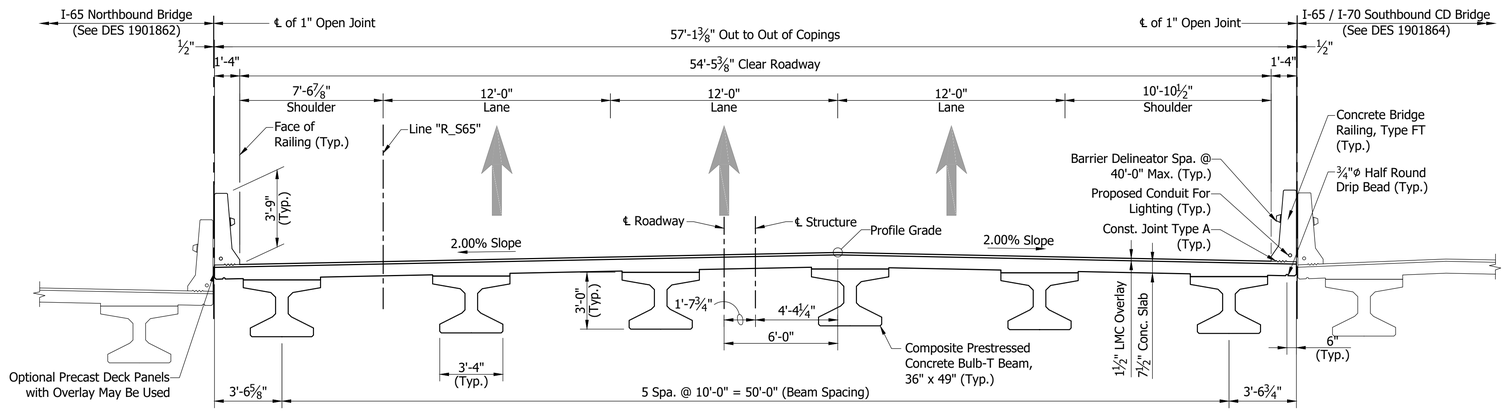

TYPICAL SECTION

Scale: 1/4"= 1'-0"

GENERAL NOTES

The existing structure shall be removed.

Reinforcing bars covering shall be 3 ½" in top and 1" min. in bottom of floor slabs and 3" in footings except bottom steel which shall be 4", and 2" in all other parts, unless noted.

Concrete in floor slab, and diaphragms, barriers, and end bents shall be an alternate Class C in accordance with the Technical Provisions.

Reinforcing Bars in Deck, Barrier, and End Bent Diaphragm Extending into the Deck shall be Stainless Steel. Reinforcing Bars in End Bent Diaphragm not Extending into the Deck and in the Cap shall be Epoxy Coated.

All exposed faces of the MSE walls and reinforced concrete bridge approach slabs shall receive surface seal.

See Bridge Aesthetic Plan for Architectural Details.

DESIGN DATA

LIVE LOAD:

Superstructure and Substructure Designed for HL-93 loading in accordance with the AASHTO LRFD Bridge Design Specifications, 8th Edition, 2017 and its subsequent revisions.

DEAD LOAD:

Designed for Actual Dead Load plus 35 psf of future wearing surface, and 15 psf for SIP Metal Deck Forms.

FLOOR SLAB:

Slab designed with a 7 ½" structural depth and a 1 ½" very early strength LMC wearing surface.

DESIGN STRESSES

CONSTRUCTION LOADING:

The exterior girder has been checked for strength, deflection, and overturning using the construction loads shown below. Cantilever overhang brackets were assumed for support of the deck overhang past the edge of the exterior beam. The finishing machine was assumed to be supported 6 in. outside the vertical coping form. The top overhang brackets were assumed to be located 6 in. past the edge of the vertical coping form. The bottom overhang brackets were assumed to be braced against the intersection of the girder bottom flange and web.

DECK FALSEWORK LOADS:

Designed for 15 psf for permanent metal stay-in-place deck forms, removable deck forms, and 2 ft. exterior walkway.

CONSTRUCTION LIVE LOAD:

Designed for 20 psf extending 2 ft. past the edge of coping and 75 lb/ft vertical force applied at a distance of 6 in. outside the face of coping over a 30 foot length of the deck centered with the finishing machine.

FINISHING-MACHINE LOAD:

4500 lb distributed over 10 ft. along the coping.

WIND LOAD:

Designed for 70 mph horizontal wind load in accordance with LRFD 3.8.1.

ULTIMATE DESIGN STRENGTHS:

Class "A" Concrete	f'c = 3,500 p.s.i.
Class "B" Concrete	f'c = 3,000 p.s.i.
Class "C" Concrete	f'c = 4,000 p.s.i.
Reinforcing Steel (Grade 60)	Fy = 60,000 p.s.i. (barrier)
	Fy = 75,000 p.s.i. (deck)
	Fy = 75,000 p.s.i. (all other locations)

SEISMIC DESIGN DATA:

Seismic Site Class	C
PGA (g)	0.051
S_s (g)	0.12
S_1 (g)	0.051
S_{D1} (g)	0.086
Seismic Design Category	A

PRESTRESSED COMPOSITE CONCRETE BULB-TEE BEAM BRIDGE
1 SPAN: 88'-6"
54'-5 3/8" CLEAR ROADWAY; SKEW: NO SKEW
I-65 / I-70 S.B. OVER MICHIGAN STREET
MARION COUNTY

RECOMMENDED FOR APPROVAL: _____ DESIGN ENGINEER — #/#/# DATE

DESIGNED: B. WRIGHT DRAWN: L. KIRSCH
CHECKED: M. EICHENAUER CHECKED: B. WRIGHT

INDIANA
DEPARTMENT OF TRANSPORTATION

GENERAL PLAN - TYPICAL SECTION

HORIZONTAL SCALE	BRIDGE FILE
As Noted	I65-111-10612 BSBL
VERTICAL SCALE	DESIGNATION
N/A	1901863
SURVEY BOOK	SHEET
ELECTRONIC	6 OF 14
CONTRACT	PROJECT
B-36910	1600808

BFS NO. 6412

\\bfsn1241\Jobs5\641200.0000\ProjDevelopment\Design\Drawings\BRIDGES\06 OVER MICHIGAN STREET\Structure 1901863\1901863_S_BR_PLN02.dwg Dylan Piercefield Plot:2/24/2020 6:24 AM Save:2/20/2020 9:31 AM

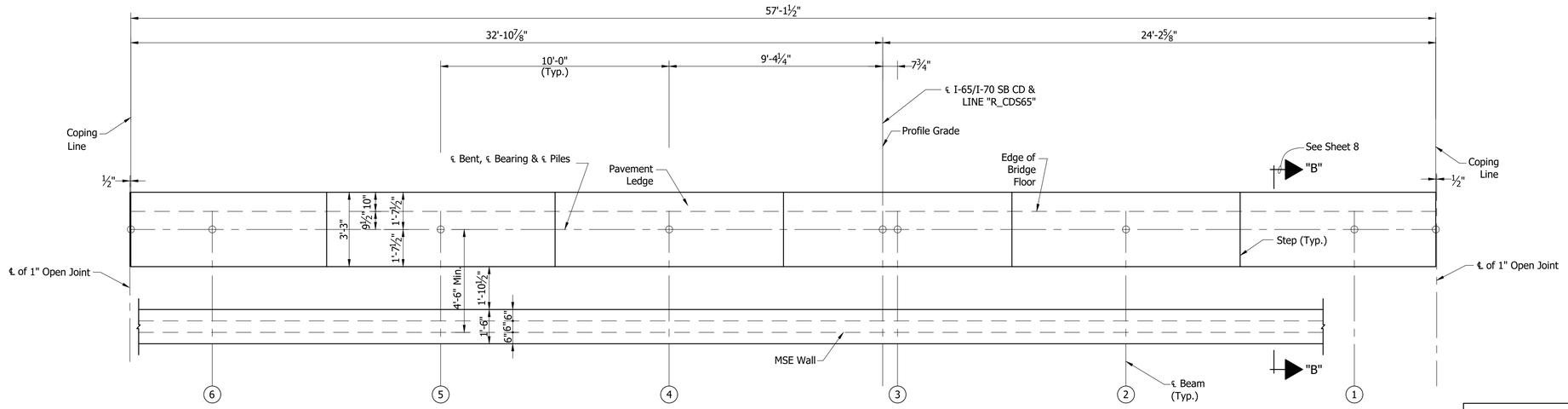

PLAN
BENT NO.1 SB (SHOWN)
BENT NO.2 SB (SIMILAR)
Scale: ⅜"=1'-0"

SEAT ELEVATIONS						
Beam No.	6	5	4	3	2	1
Bent No.1	735.22	735.42	735.62	735.45	735.25	735.05
Bent No.2	734.23	734.49	734.68	734.51	734.31	734.06

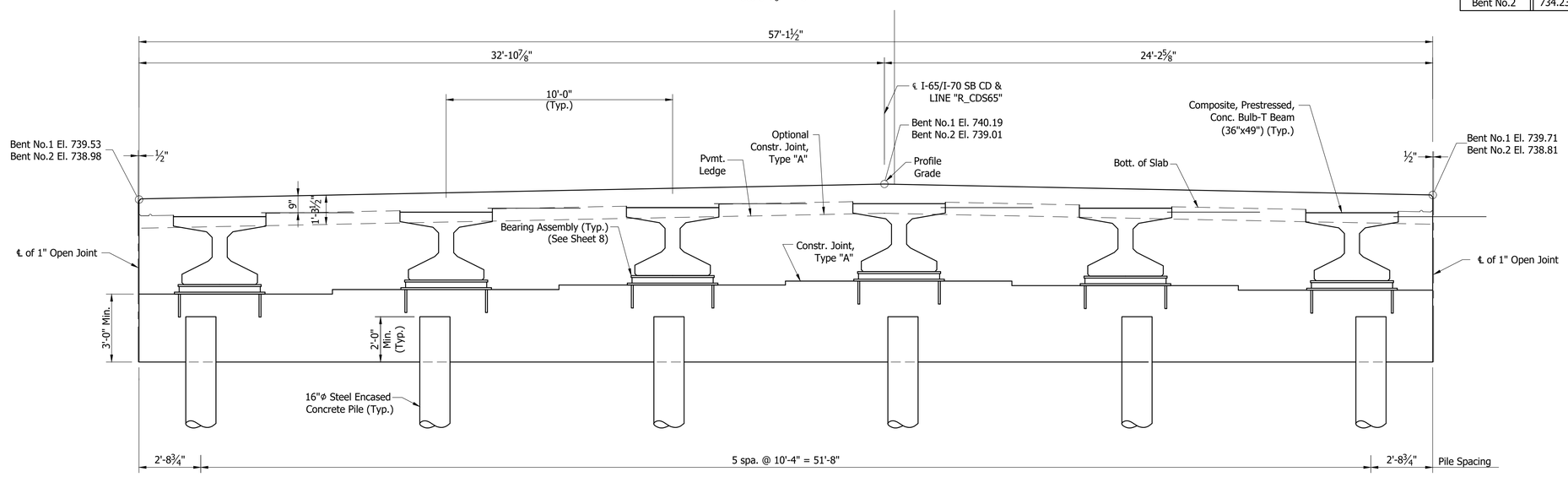

SECTION ALONG ℄ BENT
Scale: ⅜"=1'-0"

RECOMMENDED FOR APPROVAL: DESIGN ENGINEER DATE	INDIANA DEPARTMENT OF TRANSPORTATION	HORIZONTAL SCALE: N/A	BRIDGE FILE: I65-111-10612 BSBL
		VERTICAL SCALE: N/A	DESIGNATION: 1901863
DESIGNED: V. SATHIRAJU DRAWN: K. COFFMAN	BENTS NO. 1 AND NO. 2 DETAILS	SURVEY BOOK: ELECTRONIC	SHEET: 7 OF 14
CHECKED: B. WRIGHT CHECKED: B. WRIGHT		CONTRACT: B-36910	PROJECT: 1600808

BFS NO. 6412

\\bfsn\241\Job5\641200.0000\Proj\Development\Design\Drawings\BRIDGES\06 OVER MICHIGAN STREET\Structure 1901863\1901863_S_BR_BNT01.dwg Dylan Piercefield Plot:2/24/2020 6:25 AM Save:2/18/2020 10:26 AM

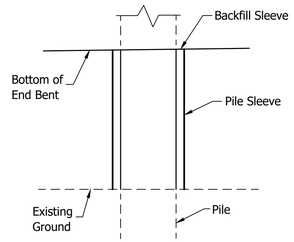

PILE SLEEVE DETAIL

Not to Scale

⊛ As an alternate a ⅞"Φx1'-3" Long Headed Automatic Welded Stud may be used.

⊗ Setting Tolerance of Bottom Plate-Level with to not more than 1/16" below top of Concrete.

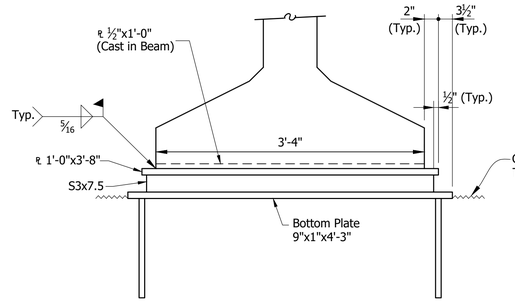

ELEVATION

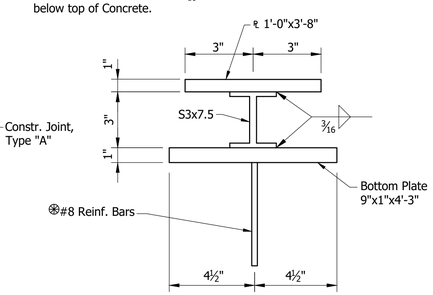

SECTION

BEARING ASSEMBLY

Not to Scale

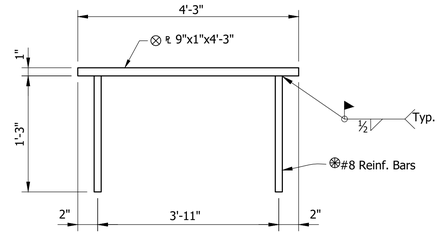

BOTTOM PLATE DETAIL

Not to Scale

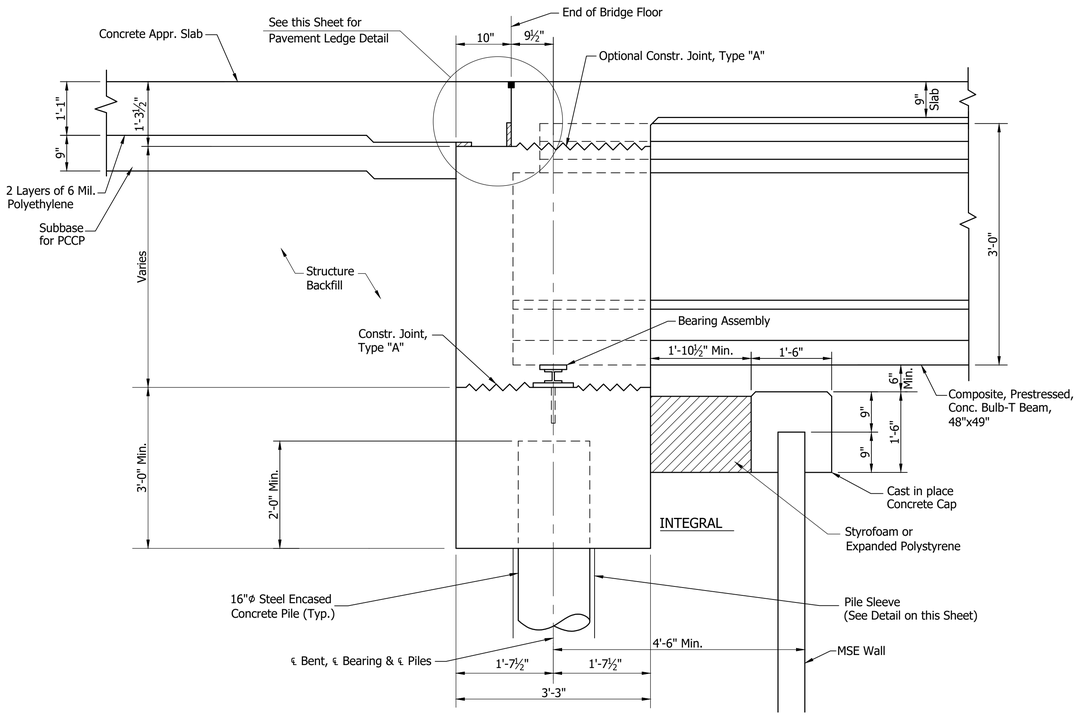

SECTION "B-B"

Not to Scale

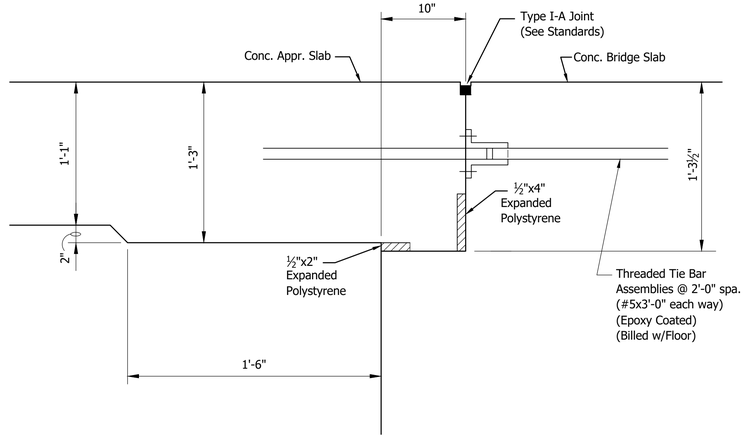

PAVEMENT LEDGE DETAIL

Not to Scale

RECOMMENDED FOR APPROVAL: DESIGN ENGINEER DATE	INDIANA DEPARTMENT OF TRANSPORTATION	HORIZONTAL SCALE: N/A	BRIDGE FILE: I65-111-10612 BSBL	
		VERTICAL SCALE: N/A	DESIGNATION: 1901863	
DESIGNED: V. SATHIRAJU DRAWN: K. COFFMAN	BENTS NO. 1 AND NO. 2 DETAILS	SURVEY BOOK: ELECTRONIC	SHEET: 8 OF 14	
CHECKED: B. WRIGHT CHECKED: B. WRIGHT		CONTRACT: B-36910	PROJECT: 1600808	

BFS NO. 6412

\\bfsn1241\jobs5\641200.0000\ProjDevelopment\Design\Drawings\BRIDGES\06 OVER MICHIGAN STREET\Structure 1901863\1901863_S_BR_BN1T02.dwg Dylan Piercefield Plot:2/24/2020 6:25 AM Save:2/19/2020 3:04 PM

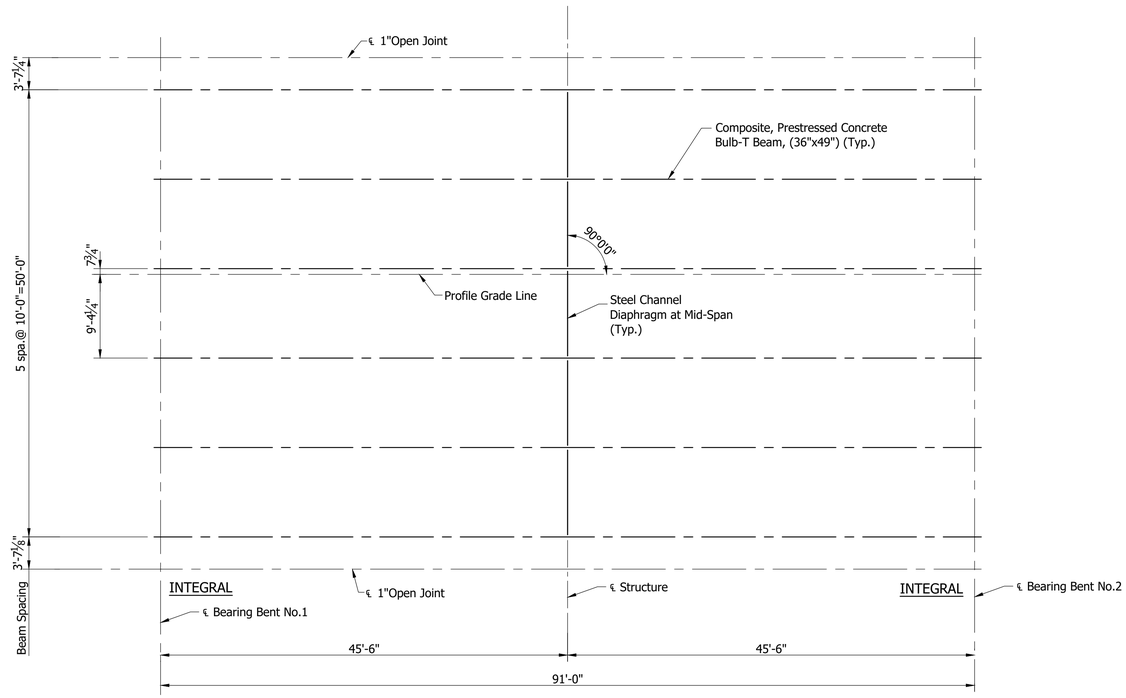

BEAM ERECTION PLAN

Scale: 1/8" = 1'-0"

RECOMMENDED FOR APPROVAL: DESIGN ENGINEER DATE	INDIANA DEPARTMENT OF TRANSPORTATION	HORIZONTAL SCALE: As Noted	BRIDGE FILE: I65-111-10612 BSBL
		VERTICAL SCALE: N/A	DESIGNATION: 1901863
DESIGNED: V. SATHIRAJU DRAWN: D. SHEETZ	FRAMING PLAN	SURVEY BOOK: ELECTRONIC	SHEET: 9 OF 14
CHECKED: B. WRIGHT CHECKED: B. WRIGHT		CONTRACT: B-36910	PROJECT: 1600808

BFS NO. 6412

\\bfsn1241\Jobs5\641200.0000\ProDevelopment\Design\Drawings\BRIDGES\06_OVER MICHIGAN STREET\Structure 1901863\1901863_S_BR_FRM01.dwg Dylan Piercefield Plot:2/24/2020 6:25 AM Save:2/18/2020 11:28 AM

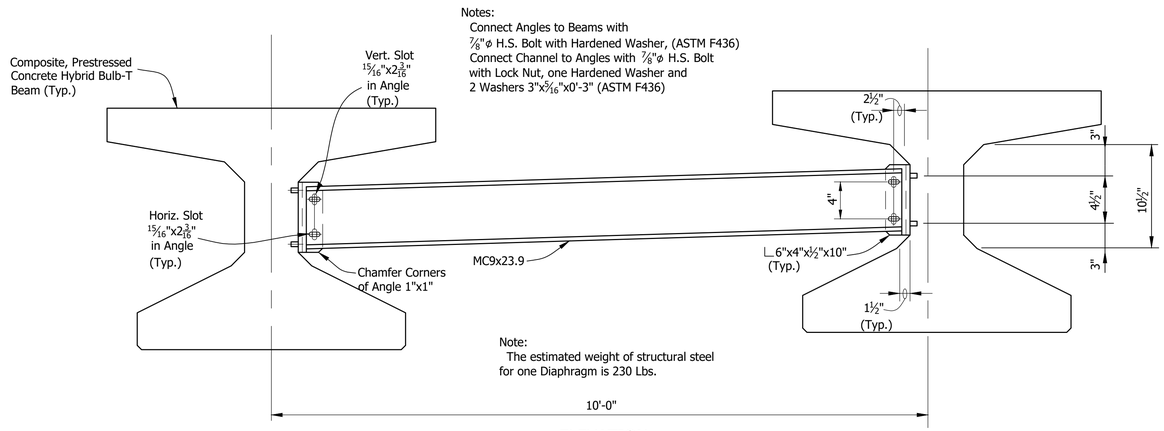

Notes:
Connect Angles to Beams with ⅞"ø H.S. Bolt with Hardened Washer, (ASTM F436)
Connect Channel to Angles with ⅞"ø H.S. Bolt with Lock Nut, one Hardened Washer and 2 Washers 3"x5/16"x0'-3" (ASTM F436)

Note:
The estimated weight of structural steel for one Diaphragm is 230 Lbs.

ELEVATION
Not to Scale

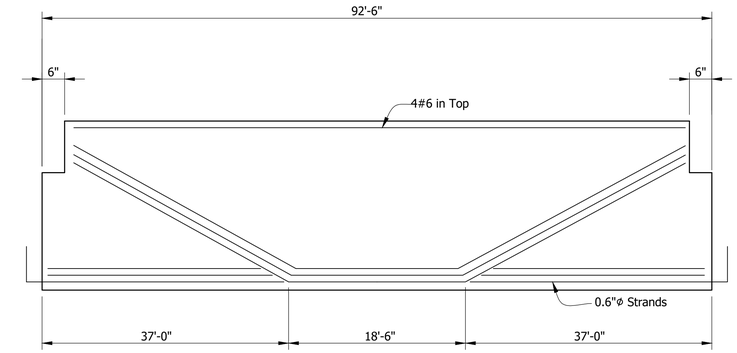

BEAM ELEVATION
SPAN "A"
SHOWING DRAPED STRANDS
Not to Scale

✳ Denotes Epoxy Coated

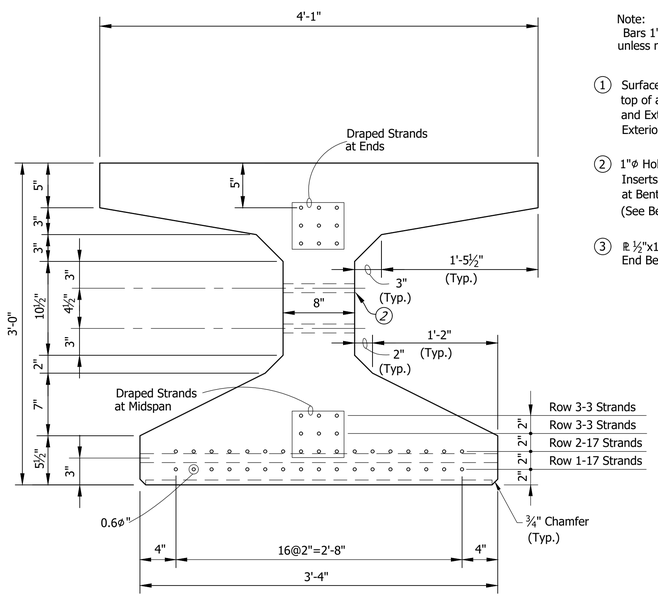

SECTION SHOWING STRANDS

Note:
Bars 1" Clear unless noted.

1. Surface Seal req'd on top of all Beams and Exterior Face of Exterior Beams
2. 1"ø Holes or ¾"ø Inserts for Dowels at Bent or Pier. (See Beam Plans)
3. ℞ ½"x12"x3'-2½" at End Bent Ends only

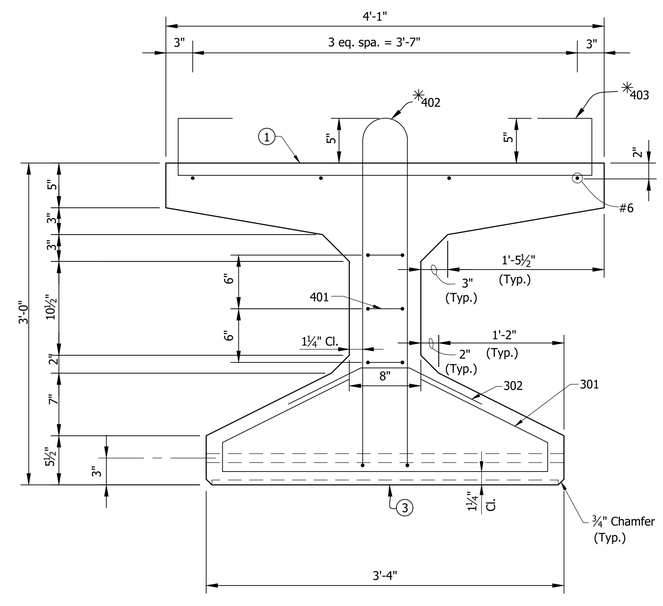

SECTION SHOWING REINFORCING

BEAM SECTIONS
Not to Scale

RECOMMENDED FOR APPROVAL: DESIGN ENGINEER DATE	INDIANA DEPARTMENT OF TRANSPORTATION	HORIZONTAL SCALE: As Noted	BRIDGE FILE: I65-111-10612 BSBL
		VERTICAL SCALE: N/A	DESIGNATION: 1901863
DESIGNED: J. GOULD DRAWN: D. PIERCEFIELD	BEAM DETAILS	SURVEY BOOK: ELECTRONIC	SHEET: 10 OF 14
CHECKED: B. WRIGHT CHECKED: B. WRIGHT		CONTRACT: B-36910	PROJECT: 1600808

BFS NO. 6412

\\bfsn1241\Jobs5\641200.0000\ProjDevelopment\Design\Drawings\BRIDGES\06 OVER MICHIGAN STREET\Structure 1901863\1901863_S_BR_BM001.dwg Dylan Piercefield Plot:2/24/2020 6:25 AM Save:2/18/2020 10:27 AM

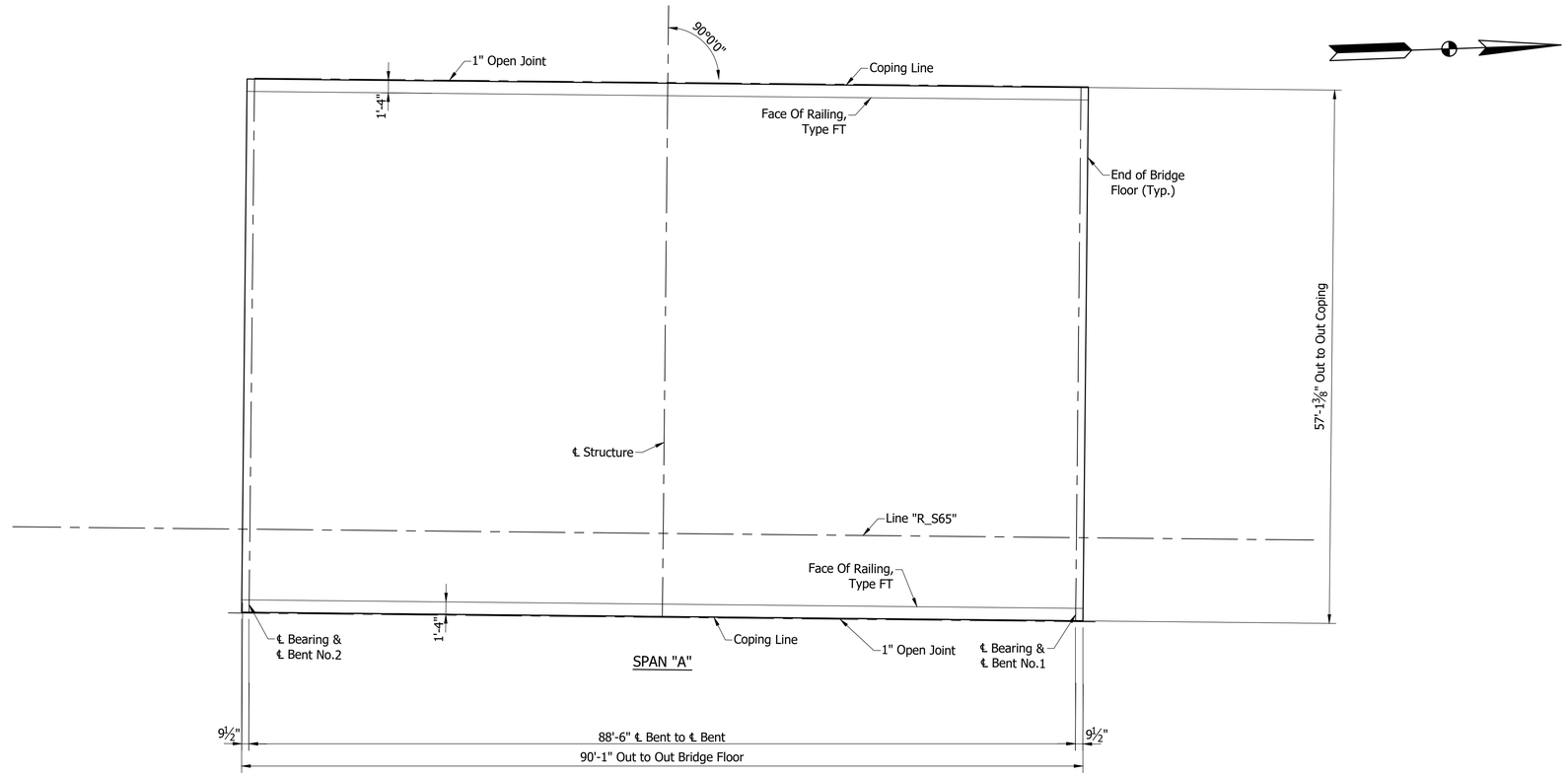

FLOOR PLAN

Scale: 1/8" = 1'-0"

NOTE:
See Sheet ___ For _____

	RECOMMENDED FOR APPROVAL: _____ DESIGN ENGINEER _____ DATE	INDIANA DEPARTMENT OF TRANSPORTATION	HORIZONTAL SCALE: As Noted	BRIDGE FILE: I65-111-10612 BSBL
			VERTICAL SCALE: N/A	DESIGNATION: 1901863
	DESIGNED: V. SATHIRAJU DRAWN: D. PIERCEFIELD	FLOOR DETAILS	SURVEY BOOK: ELECTRONIC	SHEET: 11 OF 14
	CHECKED: B. WRIGHT CHECKED: B. WRIGHT		CONTRACT: B-36910	PROJECT: 1600808

6412

BFS NO.

\\bfs\t241\jobs5\641200.0000\ProjDevelopment\Design\Drawings\BRIDGES\06 OVER MICHIGAN STREET\Structure 1901863\1901863_S_BR_FLR01.dwg Dylan Piercefield Plot: 2/24/2020 6:25 AM Save: 2/18/2020 10:27 AM

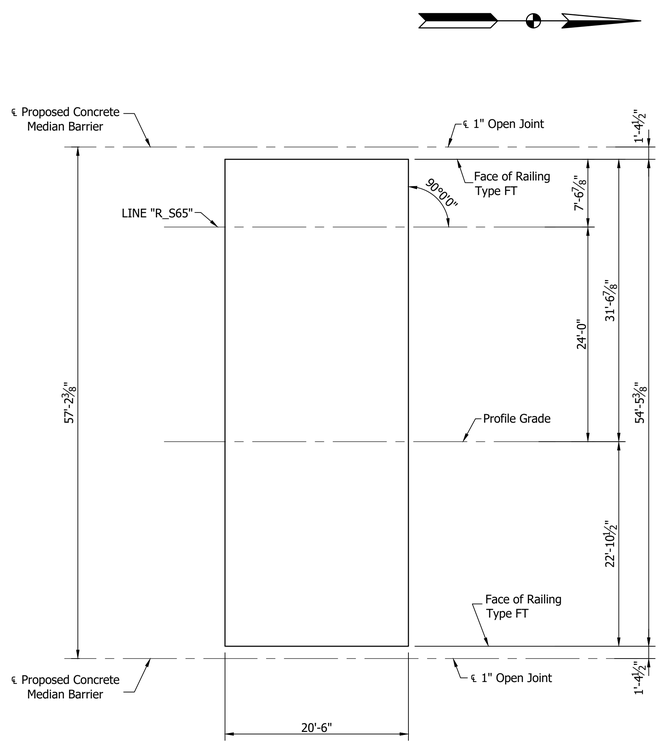

PLAN
NORTH SLAB (SHOWN)
SOUTH SLAB (OPP. HAND)
Scale: ⅛"=1'-0"

RECOMMENDED FOR APPROVAL: DESIGN ENGINEER DATE	INDIANA DEPARTMENT OF TRANSPORTATION	HORIZONTAL SCALE: As Noted	BRIDGE FILE: I65-111-10612 BSBL	6412
		VERTICAL SCALE: N/A	DESIGNATION: 1901863	
DESIGNED: D. SHEETZ DRAWN: D. SHEETZ	APPROACH SLAB	SURVEY BOOK: ELECTRONIC	SHEET: 12 OF 14	BFS NO.
CHECKED: B. WRIGHT CHECKED: M. MATEL		CONTRACT: B-36910	PROJECT: 1600808	

\\bfsn\241\jobs5\641200.0000\Pro\Development\Design\Drawings\BRIDGES\06_OVER MICHIGAN STREET\Structure 1901863\1901863_S_BR_AP501.dwg Dylan Piercefield Plot:2/24/2020 6:25 AM Save:2/18/2020 11:40 AM

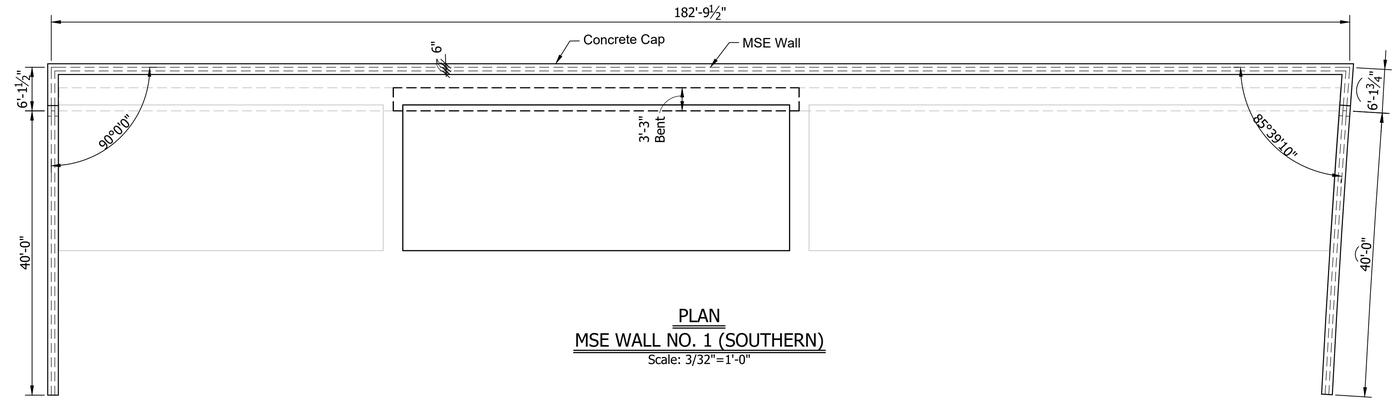

PLAN
MSE WALL NO. 1 (SOUTHERN)
Scale: 3/32"=1'-0"

NOTE:
Elevation Looking At Back Face of Wall

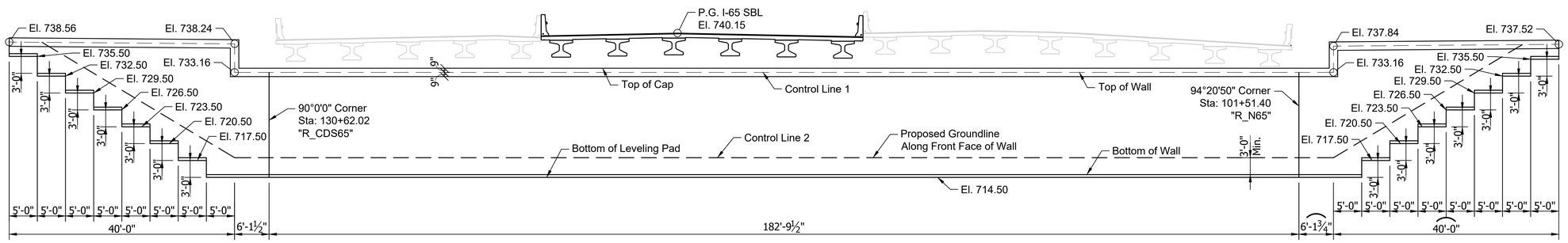

ELEVATION
MSE WALL NO. 1 (SOUTHERN)
Scale: 3/32"=1'-0"

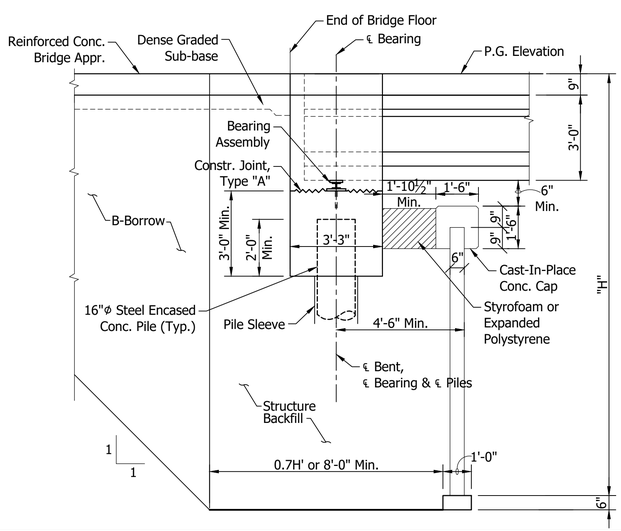

SECTION
MSE WALL NO. 1
Scale: 3/8"=1'-0"

RECOMMENDED FOR APPROVAL: DESIGN ENGINEER DATE	INDIANA DEPARTMENT OF TRANSPORTATION	HORIZONTAL SCALE: AS NOTED	BRIDGE FILE: I65-111-10612 BSBL	
		VERTICAL SCALE: AS NOTED	DESIGNATION: 1901863	
DESIGNED: B. WRIGHT DRAWN: D. PIERCEFIELD	WALL LAYOUT	SURVEY BOOK: ELECTRONIC	SHEET: 13 OF 14	6412
CHECKED: M. EICHENAUER CHECKED: B. WRIGHT		CONTRACT: B-36910	PROJECT: 1600808	BFS NO.

\\bfsnt241\Jobs5\641200.0000\ProjDevelopment\Design\Drawings\BRIDGES\06 OVER MICHIGAN STREET\Structure 1901863\1901863_S_BR_WL01.dwg Dylan Piercefield Plot: 2/24/2020 6:25 AM Save: 2/19/2020 9:16 AM

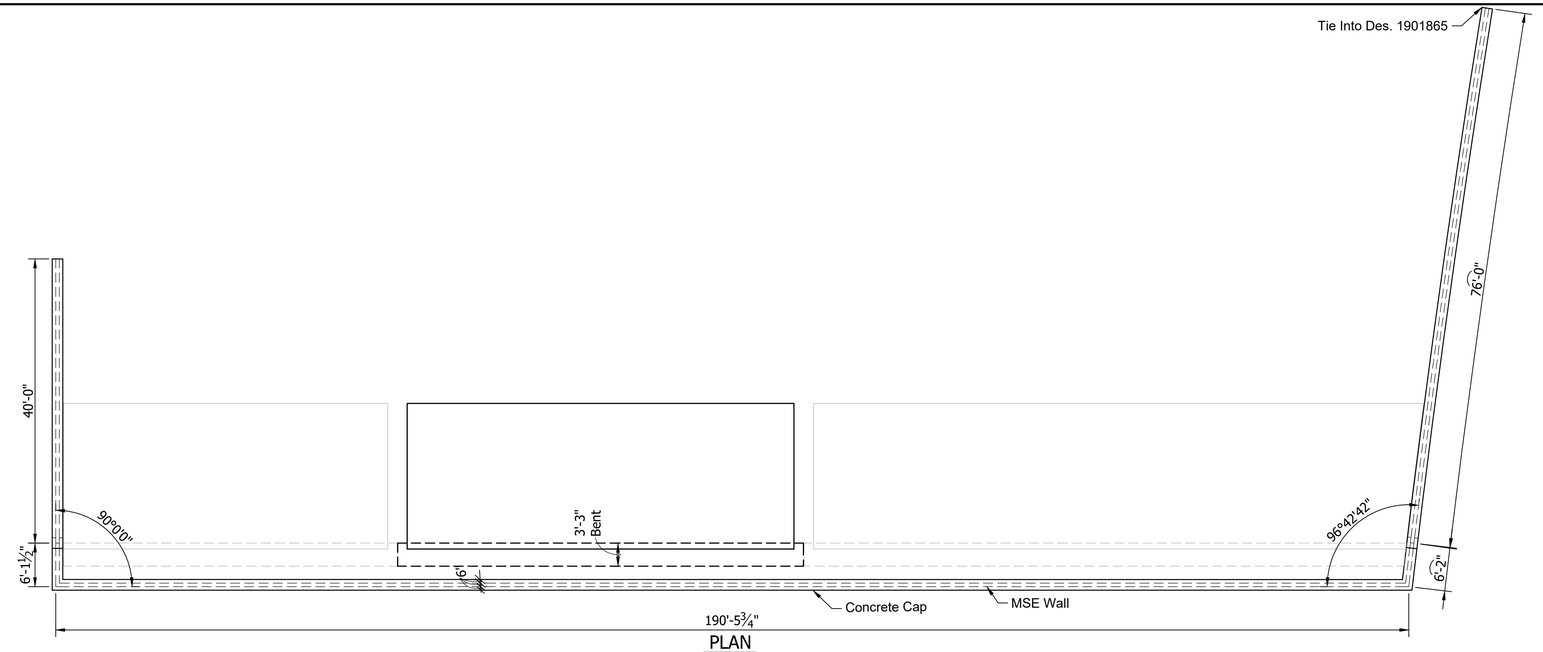

PLAN
MSE WALL NO. 2 (NORTHERN)
Scale: 3/32"=1'-0"

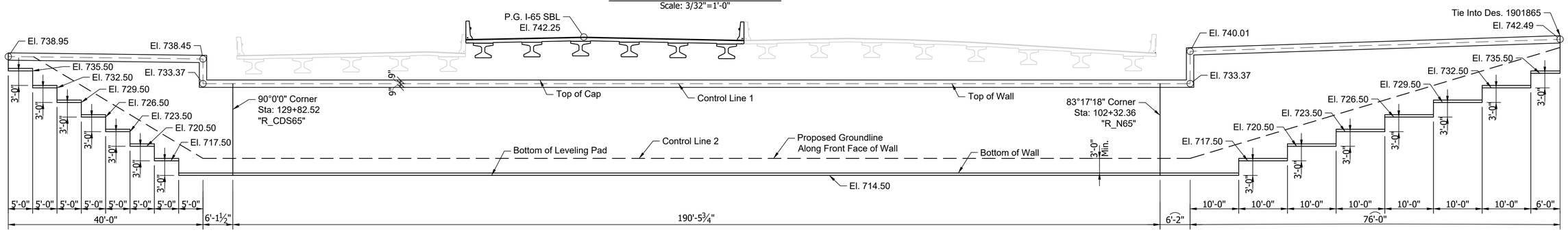

ELEVATION
MSE WALL NO. 2 (NORTHERN)
Scale: 3/32"=1'-0"

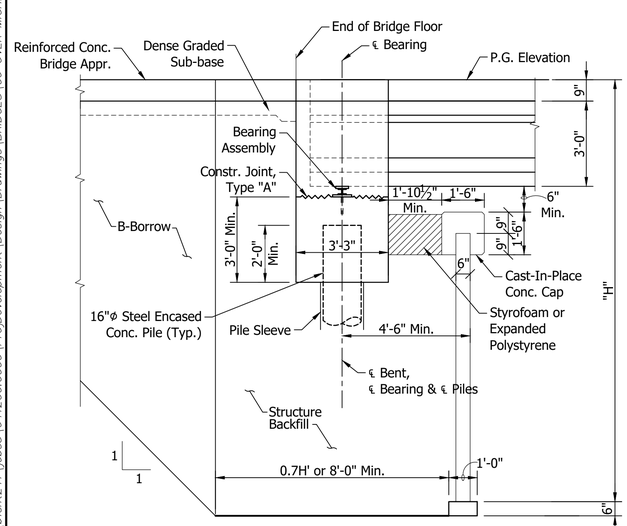

SECTION
MSE WALL NO. 2
Scale: 3/8"=1'-0"

RECOMMENDED FOR APPROVAL: DESIGN ENGINEER DATE	INDIANA DEPARTMENT OF TRANSPORTATION	HORIZONTAL SCALE: As Noted	BRIDGE FILE: I65-111-10612 BSBL
		VERTICAL SCALE: N/A	DESIGNATION: 1901863
DESIGNED: B. WRIGHT DRAWN: D. PIERCEFIELD	WALL LAYOUT	SURVEY BOOK	SHEET
CHECKED: M. EICHENAUER CHECKED: B. WRIGHT		ELECTRONIC	14 OF 14
		CONTRACT: B-36910	PROJECT: 1600808

BFS NO. 6412

\\bfsn1241\jobs5\641200.0000\Proj\Development\Design\Drawings\BRIDGES\06 OVER MICHIGAN STREET\Structure 1901863\1901863_S_BR_WL102.dwg Dylan Piercefield Plot: 2/24/2020 6:26 AM Save: 2/19/2020 9:16 AM

PROJECT	DESIGNATION
1600808	1901864
CONTRACT	BRIDGE FILE
B-36910	I65-111-10613 BCD

STRUCTURE INFORMATION

STRUCTURE	TYPE	SPAN & SKEW	OVER	STATION
I65-111-10613 BCD	PRESTRESSED COMPOSITE CONCRETE BULB-TEE BEAM BRIDGE	1 SPAN: 88'-6" SKEW: NO SKEW	MICHIGAN STREET	130+14.94 LINE "R_CDS65"

INDIANA DEPARTMENT OF TRANSPORTATION

BRIDGE PLANS

FOR SPANS OVER 20 FEET

ROUTE: I-65 / I-70 S.B. CD AT: RP 111+69

PROJECT NO. 1600808 P.E. 1600808 CONST.

NO ADDITIONAL RIGHT OF WAY REQUIRED FOR THIS PROJECT

BRIDGE REPLACEMENT ON I-65 / I-70 S.B. CD OVER MICHIGAN STREET
LOCATED 1.39 MILES NORTH OF I-70 (SOUTH SPLIT) INTERCHANGE
SECTION 1, TOWNSHIP 15 NORTH, RANGE 3 EAST
CENTER TOWNSHIP, MARION COUNTY INDIANA

TRAFFIC DATA	I-65 / I-70 S.B. CD	MICHIGAN STREET
A.D.T. (2021)	18,922 V.P.D.	5,859 V.P.D.
A.D.T. (2041)	18,473 V.P.D.	18,483 V.P.D.
D.H.V. (2041)	2,511 V.P.H.	1,492 V.P.H.
DIRECTIONAL DISTRIBUTION	100 %	55 %
TRUCKS	5 % D.H.V.	6 % D.H.V.

DESIGN DATA		
DESIGN SPEED	55 M.P.H.	30 M.P.H.
PROJECT DESIGN CRITERIA	4R (FREEWAY)	N/A
FUNCTIONAL CLASSIFICATION	URBAN FREEWAY	MINOR ARTERIAL
RURAL/URBAN	URBAN (BUILT-UP)	URBAN (BUILT-UP)
TERRAIN	LEVEL	LEVEL
ACCESS CONTROL	FULL CONTROL	NONE

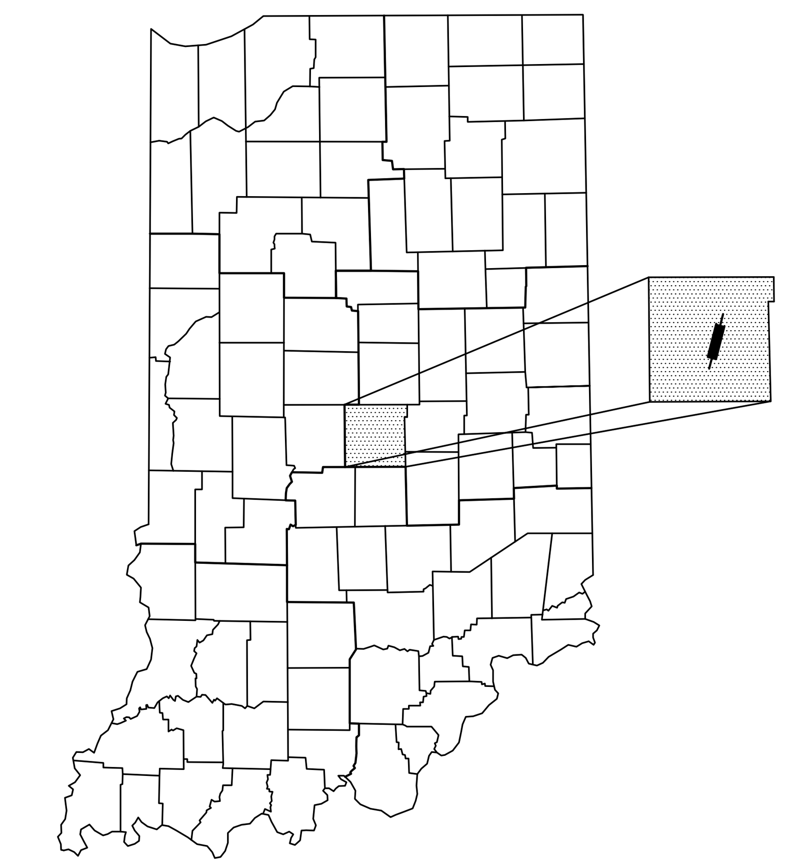

PROJECT LOCATION SHOWN BY

LATITUDE: 39°46'26" N LONGITUDE: 86°08'33" W

BRIDGE LENGTH :	0.018 MI.
ROADWAY LENGTH :	SEE ROAD PLANS
TOTAL LENGTH :	SEE ROAD PLANS
MAX GRADE :	1.52%

HUC: 05120201130020

END PROJECT No. 1600808
STATION 25+75.00 LINE "P_ALG_I65"

END PROJECT No. 1600808
STATION 41+85.70 LINE "P_ALG_I70"

R. 3 E. | R. 4 E.

T. 16 N.

T. 15 N.

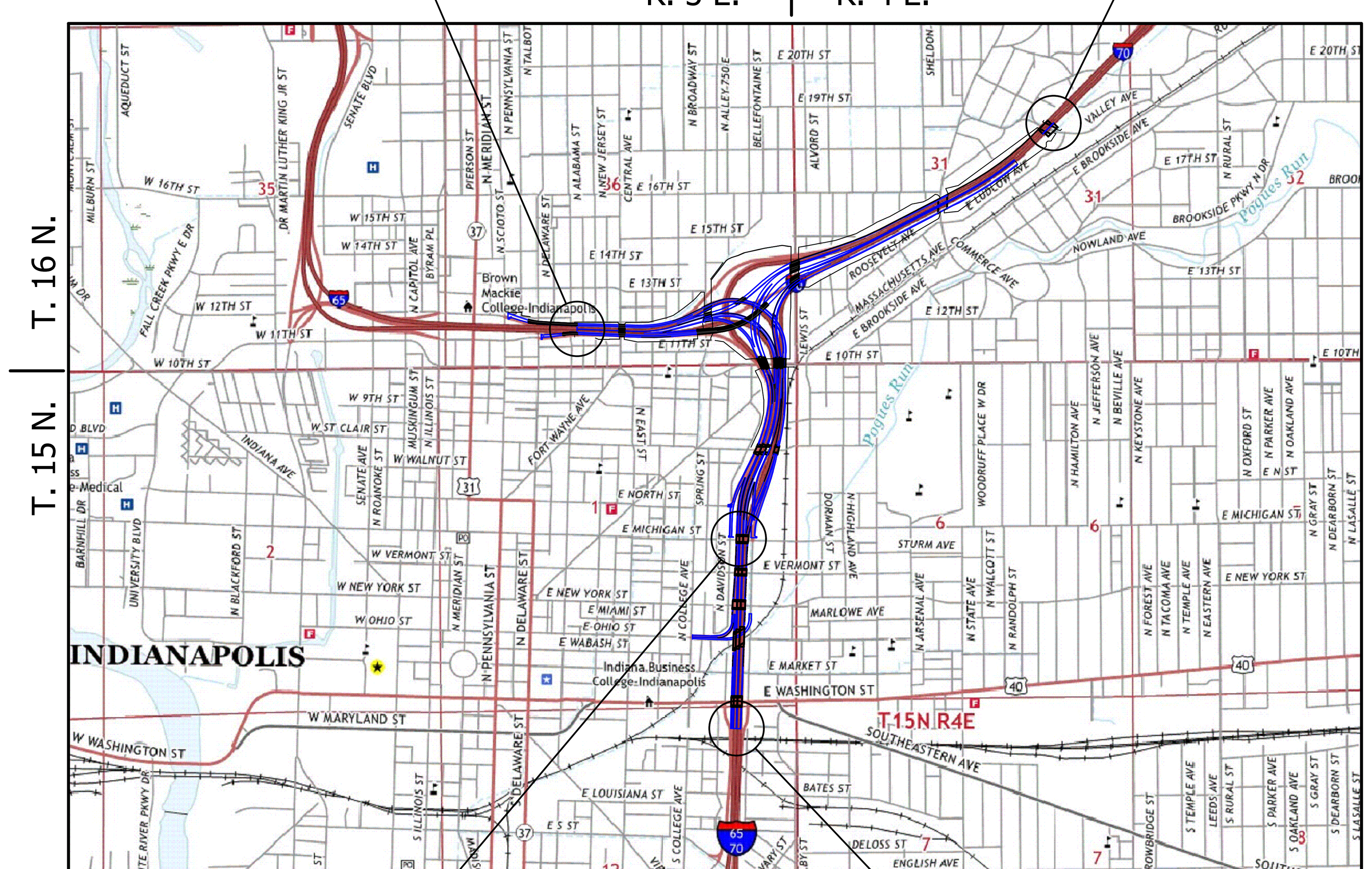

SCALE: 1" = 2000'

PROJECT LOCATION
BRIDGE FILE No. I65-111-10613 BCD
I-65 / I-70 S.B. CD OVER MICHIGAN STREET
STA. 130+14.94 LINE "R_CDS65"

LOCATION MAP
MARION COUNTY

BEGIN PROJECT No. 1600808
STATION 113+00.00 LINE "P_ALG_I65/I70"

INDIANA DEPARTMENT OF TRANSPORTATION STANDARD SPECIFICATIONS DATED 2020 TO BE USED WITH THESE PLANS.

SUPERIOR CONSTRUCTION

PLANS PREPARED BY: Butler Fairman and Seufert Inc. (317)713-4615 PHONE

CERTIFIED BY: #/#/# DATE

APPROVED FOR LETTING: #/#/# INDIANA DEPARTMENT OF TRANSPORTATION DATE

BRIDGE FILE	
I65-111-10613 BCD	
DESIGNATION	
1901864	
SURVEY BOOK	SHEET
ELECTRONIC	1 OF 14
CONTRACT	PROJECT
B-36910	1600808

6412

\\bfsnt241\Jobs5\641200.0000\ProjDevelopment\Design\Drawings\BRIDGES\06 OVER MICHIGAN STREET\Structure 1901864\1901864_S_BR_TTL01.dwg Dylan Piercefield Plot:2/24/2020 6:26 AM Save:2/21/2020 10:53 AM

UTILITIES

REVISIONS

SHEET NO.	DATE	REVISED

KIN PROJECT INFORMATION

DESIGNATION	PROJECT DESCRIPTION	
1600808	COMPLETE ROAD RECONSTRUCTION OF I-65/I-70 FROM WASHINGTON STREET TO I-65 OVER DELAWARE STREET AND I-70 OVER VALLEY AVENUE	LEAD DES
1901935	ITS FOR I-65/I-70 FROM WASHINGTON STREET TO I-65 OVER DELAWARE STREET AND I-70 OVER VALLEY AVENUE	
1901936	SIGNS, LIGHTING, SIGNALS AND MARKING FOR I-65/I-70 FROM WASHINGTON STREET TO I-65 OVER DELAWARE STREET AND I-70 OVER VALLEY AVENUE	
1901847	BRIDGE REPLACEMENT ON I-65/I-70 NB OVER WASHINGTON STREET	
1901848	BRIDGE REPLACEMENT ON I-65/I-70 SB OVER WASHINGTON STREET	
1901849	BRIDGE REPLACEMENT ON I-65/I-70 SB CD OVER WASHINGTON STREET	
1901850	BRIDGE REPLACEMENT ON I-65/I-70 NB OVER MARKET STREET	
1901851	BRIDGE REPLACEMENT ON I-65/I-70 SB OVER MARKET STREET	
1901852	BRIDGE REPLACEMENT ON I-65/I-70 SB CD OVER MARKET STREET	
1901853	BRIDGE REPLACEMENT ON I-65/I-70 NB OVER CSX RAILROAD & OHIO STREET	
1901854	BRIDGE REPLACEMENT ON I-65/I-70 SB OVER CSX RAILROAD & OHIO STREET	
1901855	BRIDGE REPLACEMENT ON I-65/I-70 SB CD OVER CSX RAILROAD & OHIO STREET	
1901856	BRIDGE REPLACEMENT ON I-65/I-70 NB OVER NEW YORK STREET	
1901857	BRIDGE REPLACEMENT ON I-65/I-70 SB OVER NEW YORK STREET	
1901858	BRIDGE REPLACEMENT ON I-65/I-70 SB CD OVER NEW YORK STREET	
1901861	BRIDGE REPLACEMENT ON I-65/I-70 SB CD OVER VERMONT STREET	
1901862	BRIDGE REPLACEMENT ON I-65 NB & I-70 EB OVER MICHIGAN STREET	
1901863	BRIDGE REPLACEMENT ON I-65 SB/I-70 WB OVER MICHIGAN STREET	
1901864	BRIDGE REPLACEMENT ON I-65/I-70 SB CD OVER MICHIGAN STREET	
1901865	BRIDGE REPLACEMENT ON I-65 NB OVER I-70 EB ENTRANCE RAMP	
1901881	BRIDGE REPLACEMENT ON I-65 NB OVER ST. CLAIR STREET	
1901889	NEW BRIDGE CONSTRUCTION ON I-70 EB OVER ST. CLAIR STREET	
1901892	BRIDGE REPLACEMENT ON I-65 SB/I-70 WB OVER ST. CLAIR STREET	
1901896	NEW BRIDGE CONSTRUCTION ON SB CD OVER ST. CLAIR STREET	
1901897	BRIDGE REPLACEMENT ON I-65 NB OVER EAST 10TH STREET	
1901899	NEW BRIDGE CONSTRUCTION ON I-70 EB OVER EAST 10TH STREET	
1901901	BRIDGE REPLACEMENT ON I-65 SB OVER EAST 10TH STREET	
1901903	BRIDGE REPLACEMENT ON I-70 WB OVER EAST 10TH STREET	
1901905	NEW BRIDGE CONSTRUCTION ON SB CD & RAMP OVER EAST 10TH STREET	
1901906	NEW BRIDGE CONSTRUCTION ON I-65 NB CD EXIT RAMP OVER CENTRAL AVENUE	
1901907	BRIDGE REPLACEMENT ON I-65 NB OVER CENTRAL AVENUE	
1901908	BRIDGE REPLACEMENT ON I-65 SB OVER CENTRAL AVENUE	
1901909	NEW BRIDGE CONSTRUCTION ON I-65 SB CD ENTRANCE RAMP OVER CENTRAL AVE.	
1901914	BRIDGE REPLACEMENT ON I-70 WB TO I-65 NB OVER COLLEGE AVENUE	
1901915	BRIDGE REPLACEMENT ON I-65 NB & PENNSYLVANIA EXIT RAMP OVER COLLEGE AVENUE	
1901917	BRIDGE REPLACEMENT ON I-65 SB & SB CD RAMP OVER COLLEGE AVENUE	
1901918	BRIDGE REPLACEMENT ON I-65 SB & DELAWARE ENTRANCE RAMP TO I-70 EB OVER COLLEGE AVENUE & FIVE RAMPS	
1901919	BRIDGE REPLACEMENT ON I-65 NB OVER I-70 WB & RAMP	
1901920	BRIDGE REPLACEMENT ON I-70 WB TO I-65 NB OVER THREE RAMPS	
1901921	BRIDGE REPLACEMENT ON I-65 SB OVER I-70 WB & SB CD RAMP	
1901922	NEW BRIDGE CONSTRUCTION ON I-70 EB OVER I-65 NB	
1901923	BRIDGE REPLACEMENT ON I-70 WB & SB CD OVER LEWIS STREET & MONON TRAIL	
1901925	NEW BRIDGE CONSTRUCTION ON I-70 WB TO I-65 NB OVER LEWIS STREET & MONON TRAIL	
1901927	NOT USED	
1901928	BRIDGE REPLACEMENT ON I-70 EB OVER LEWIS STREET & MONON TRAIL	
1901929	PREVENTATIVE MAINTENANCE ON I-70 WB OVER ROOSEVELT AT COMMERCE AVENUE	
1901930	PREVENTATIVE MAINTENANCE ON I-70 EB OVER ROOSEVELT AT COMMERCE AVENUE	
1901931	PREVENTATIVE MAINTENANCE ON I-70 WB OVER VALLEY AVENUE	
1901932	PREVENTATIVE MAINTENANCE ON I-70 EB OVER VALLEY AVENUE	
1901933	REHABILITATE AND WIDEN ON I-65 OVER 7 STREETS, ACCESS RD, MONORAIL (AKA "MONSTER BRIDGE") - PENNSYLVANIA EXIT RAMP	
1901934	REHABILITATE AND WIDEN ON I-65 OVER 7 STREETS, ACCESS RD, MONORAIL (AKA "MONSTER BRIDGE") - DELAWARE ENTRANCE RAMP	
1902179	BRIDGE REPLACEMENT ON I-65 NB/I70 EB OVER VERMONT STREET	
1902180	BRIDGE REPLACEMENT ON I-65 SB/I70 WB OVER VERMONT STREET	

INDEX

SHEET NO.	DESIGNATION
1	TITLE
2	INDEX
3	MAINTENANCE OF TRAFFIC
4	LAYOUT
5	GENERAL PLAN - PLAN & ELEVATION VIEWS
6	GENERAL PLAN - TYPICAL SECTION
7	BENTS NO. 1 AND NO. 2 DETAILS
8	BENTS NO. 1 AND NO. 2 DETAILS
9	FRAMING PLAN
10	BEAM DETAILS
11	FLOOR DETAILS
12	APPROACH SLAB
13	WALL LAYOUT
14	WALL LAYOUT

RECOMMENDED FOR APPROVAL: _____ DESIGN ENGINEER #/#/# DATE

DESIGNED: B. WRIGHT DRAWN: K. COFFMAN

CHECKED: M. EICHENAUER CHECKED: B. WRIGHT

INDIANA
DEPARTMENT OF TRANSPORTATION

INDEX

HORIZONTAL SCALE	BRIDGE FILE
N/A	I65-111-10613 BCD
VERTICAL SCALE	DESIGNATION
N/A	1901864
SURVEY BOOK	SHEET
ELECTRONIC	2 OF 14
CONTRACT	PROJECT
B-36910	1600808

BPS NO. 6412

\\bfsn1241\Jobs5\641200.0000\ProjDevelopment\Design\Drawings\BRIDGES\06 OVER MICHIGAN STREET\Structure 1901864\1901864_S_BR_IND01.dwg Dylan Piercefield Plot: 2/24/2020 6:26 AM Save: 2/18/2020 11:04 AM

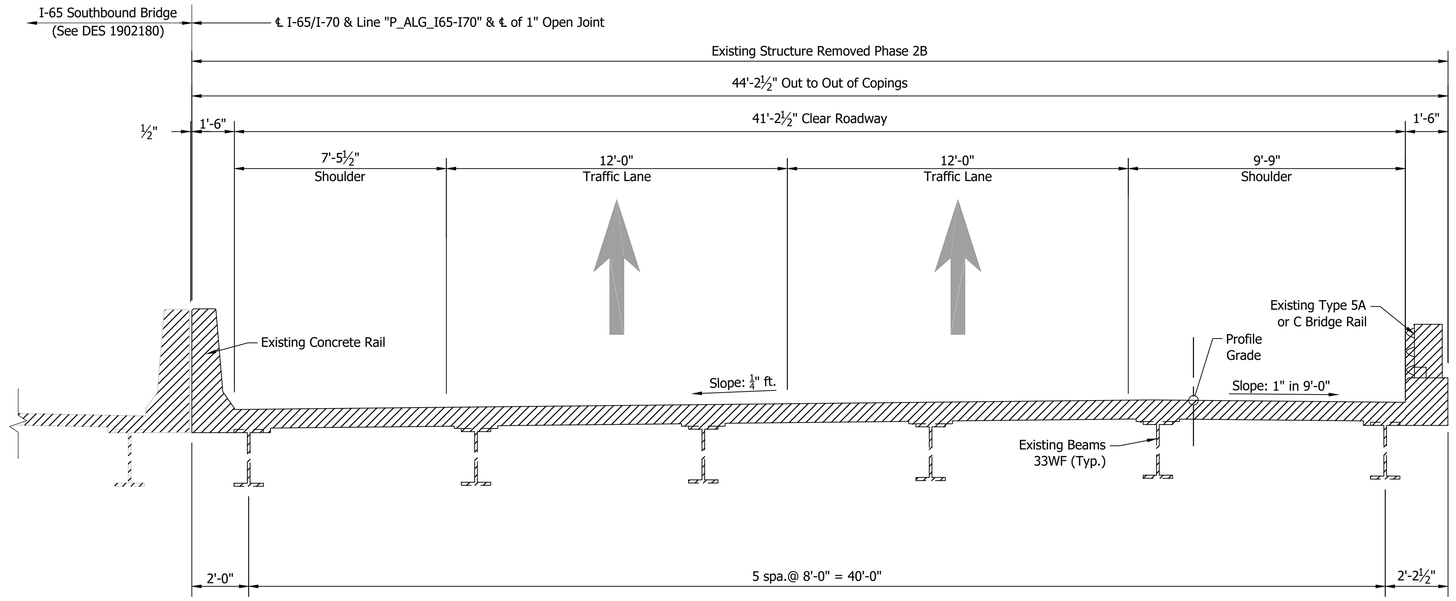

EXISTING SOUTHBOUND TYPICAL SECTION

Scale: 3/8"=1'-0"

LEGEND

Limits of Removal

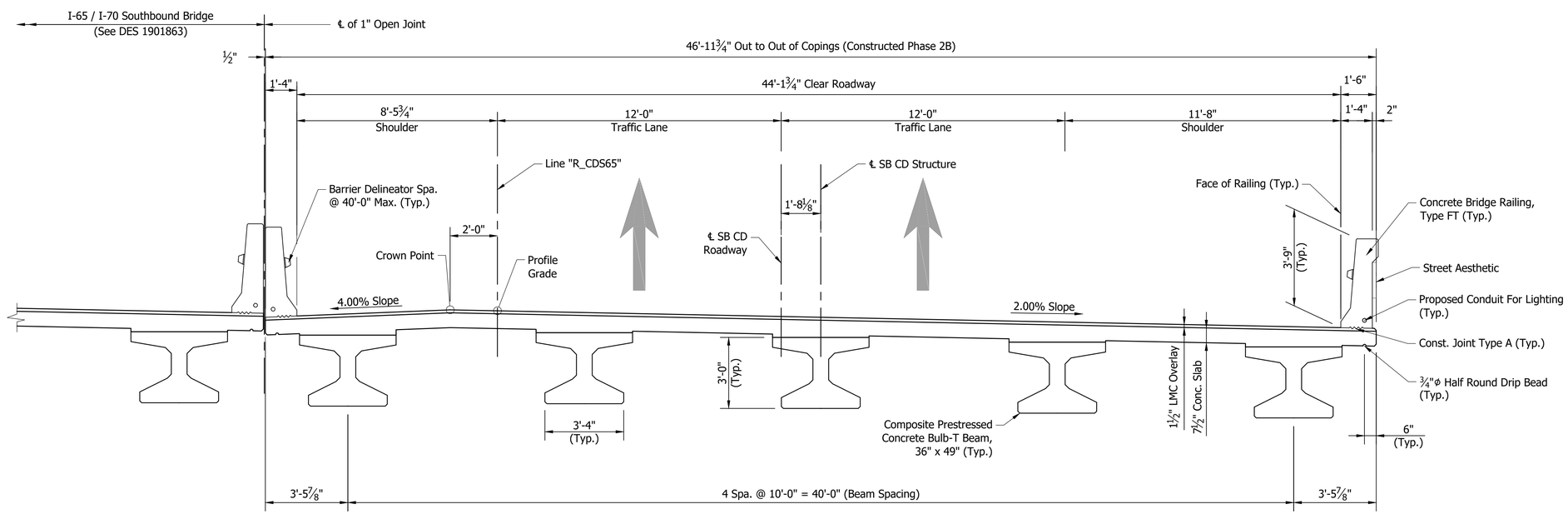

PROPOSED SOUTHBOUND CD TYPICAL SECTION

Scale: 3/8"=1'-0"

RECOMMENDED FOR APPROVAL: DESIGN ENGINEER DATE	INDIANA DEPARTMENT OF TRANSPORTATION	HORIZONTAL SCALE: As Noted	VERTICAL SCALE: N/A	BRIDGE FILE: I65-111-10613 BCD; DESIGNATION: 1901864
DESIGNED: V. SATHIRAJU DRAWN: D. PIERCEFIELD	MAINTENANCE OF TRAFFIC	SURVEY BOOK: ELECTRONIC	SHEET: 3 OF 14	CONTRACT: B-36910
CHECKED: B. WRIGHT CHECKED: B. WRIGHT				PROJECT: 1600808

BFS NO. 6412

\\bfsn1241\obs5\641200.0000\ProjDevelopment\Design\Drawings\BRIDGES\06 OVER MICHIGAN STREET\Structure 1901864\1901864_S_BR_MOT01.dwg Dylan Piercefield Plot:2/24/2020 6:26 AM Save:2/6/2020 6:01 AM

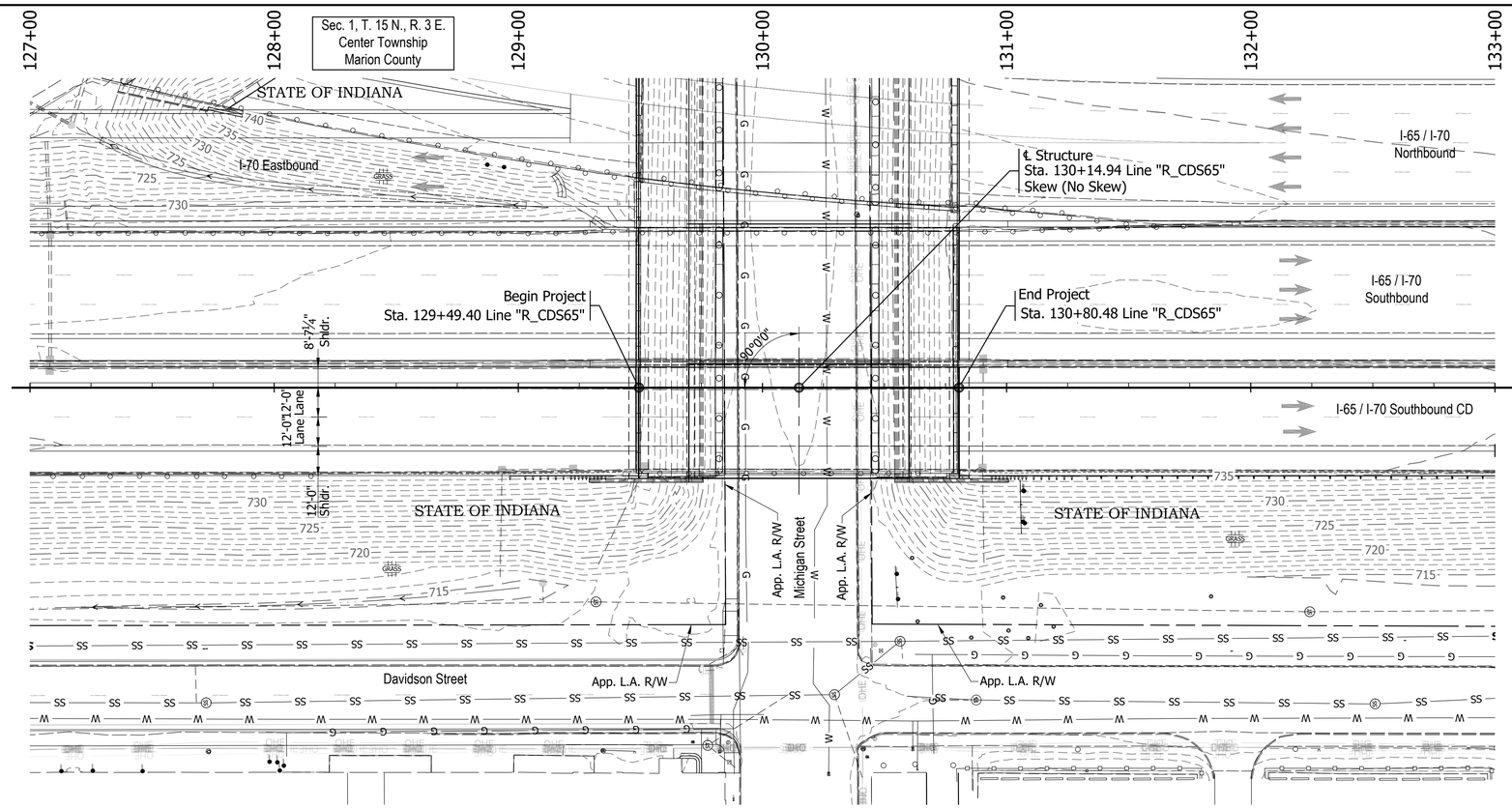

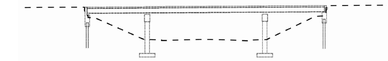

EXISTING STRUCTURE

The existing structure was built in 1974. Structure was rehabilitated in 2003. The structure is a 3-span continuous composite 33" WF steel beam.

Span lengths: 1 @ 33'-0", 1 @ 64'-0", 1 @ 33'-0"

Clear roadway 41'-2 ½". Total length of 133'-6"

Existing structure to be removed.

Existing plans are on file with the Indiana Department of Transportation under Bridge File No. I-65-112-5733 & I-65-112-5733A.

EARTHWORK TABULATION

See Roadway Plans (DES #_____) for earthwork tabulation.

NOTE: ALL TOPOGRAPHY INFORMATION REFERENCED TO LINE "R_CDS65" UNLESS NOTED.

ALL R/W ON THIS SHEET DESCRIBED FROM LINE "R_CDS65" UNLESS OTHERWISE NOTED

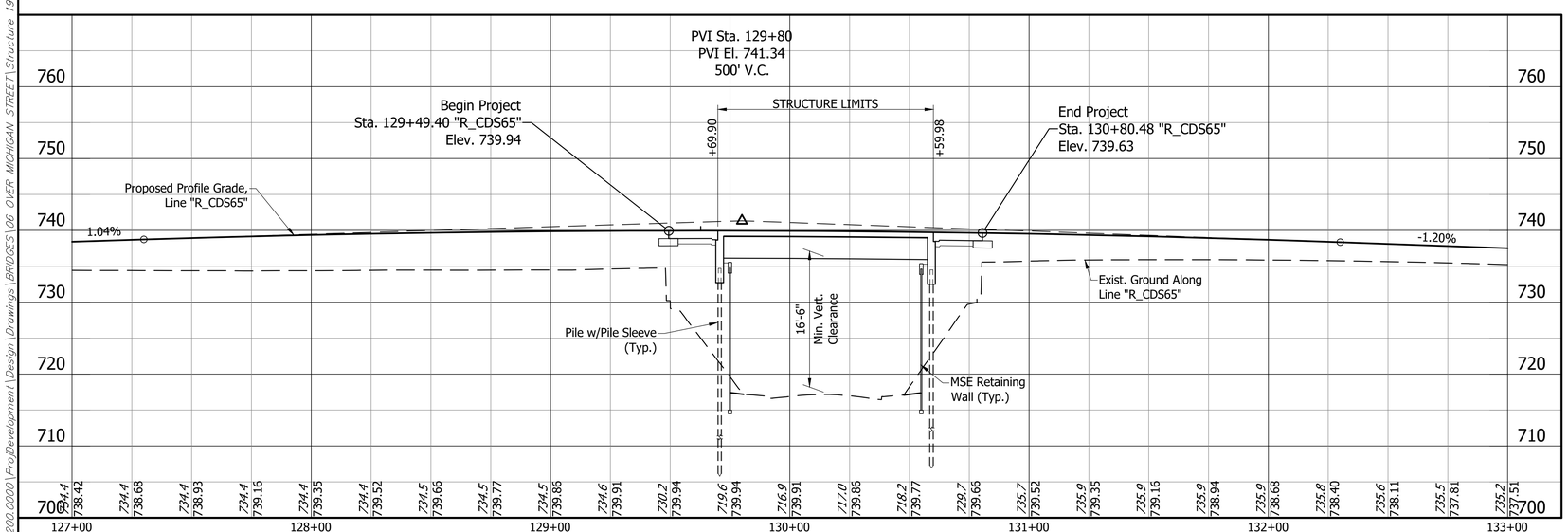

Notes:

1. For R/W and property information, see Location Control Route Survey (DES # _____).
2. For alignment data, see Geometric Layout Sheets (DES #_____).
3. See Road Plans (DES #_____) for Horizontal & Vertical Control Data.

PRESTRESSED COMPOSITE CONCRETE
BULB-TEE BEAM BRIDGE
1 SPAN: 88'-6"
44'-1 3/4" CLEAR ROADWAY; SKEW: NO SKEW
I-65 / I-70 S.B. CD OVER MICHIGAN STREET
MARION COUNTY

RECOMMENDED FOR APPROVAL: _____ DESIGN ENGINEER #/#/# DATE

DESIGNED: B. WRIGHT DRAWN: L. KIRSCH
CHECKED: M. EICHENAUER CHECKED: B. WRIGHT

INDIANA
DEPARTMENT OF TRANSPORTATION

LAYOUT

HORIZONTAL SCALE	BRIDGE FILE
1" = 30'	I65-111-10613 BCD
VERTICAL SCALE	DESIGNATION
1" = 10'	1901864
SURVEY BOOK	SHEET
ELECTRONIC	4 OF 14
CONTRACT	PROJECT
B-36910	1600808

BFS NO. 6412

\\bfsn1241\jobs5\641200.0000\ProjDevelopment\Design\Drawings\BRIDGES\06 OVER MICHIGAN STREET\Structure 1901864\1901864_S_BR_LAY01.dwg Dylan Piercefield Plot: 2/24/2020 8:23 AM Save: 2/24/2020 8:22 AM

STRUCTURE TO BE BUILT ON 500' VERTICAL CURVE

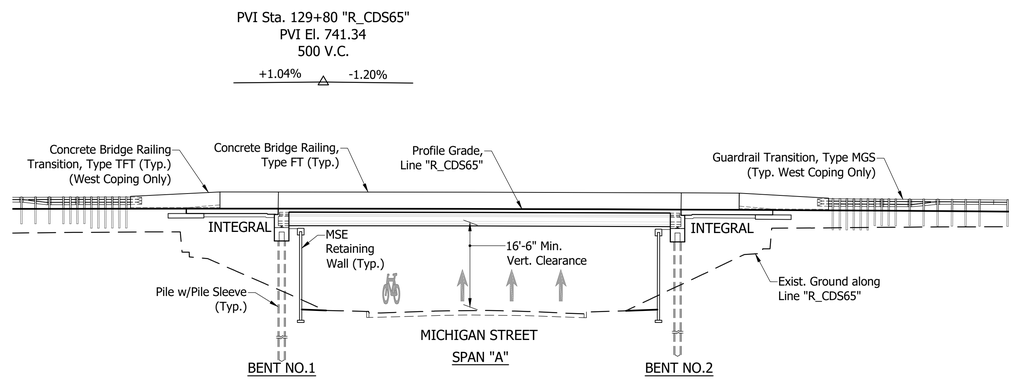

ELEVATION

Scale: 1/8" = 1'-0"

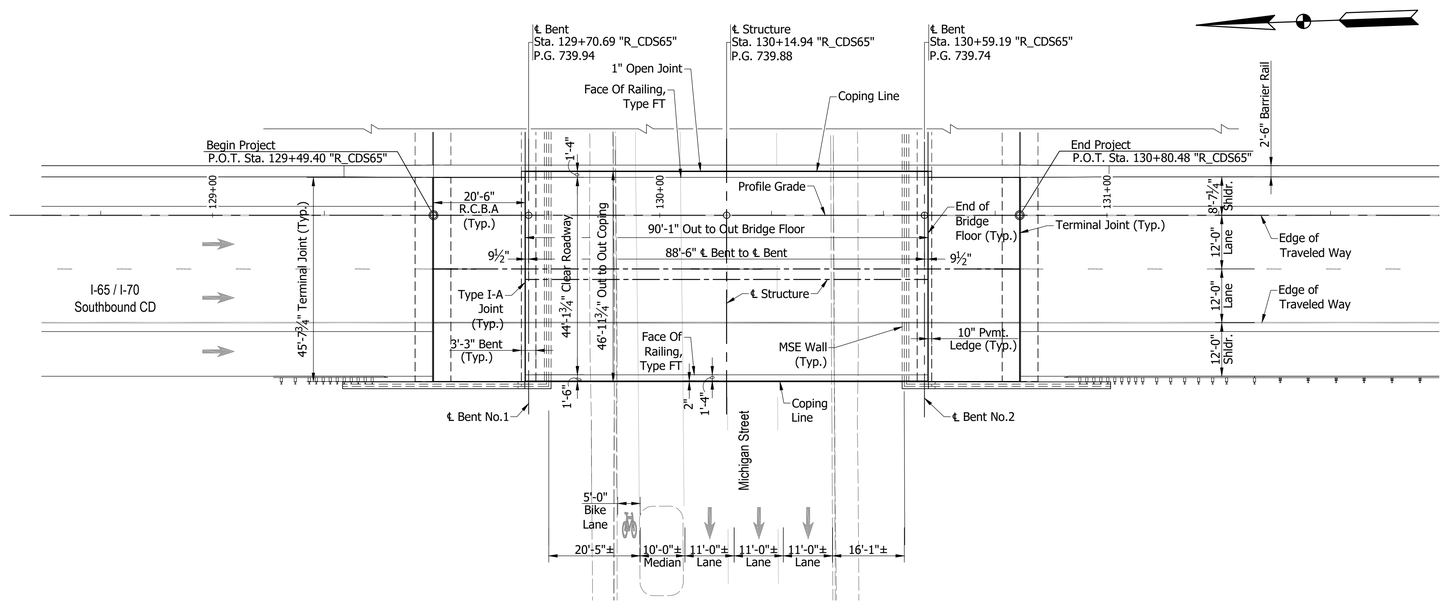

PLAN

Scale: 1/8" = 1'-0"

NOTE:
See Sheet 6 For Typical Section

PRESTRESSED COMPOSITE CONCRETE BULB-TEE BEAM BRIDGE
1 SPAN: 88'-6"
44'-1 3/4" CLEAR ROADWAY; SKEW: NO SKEW
I-65 / I-70 S.B. CD OVER MICHIGAN STREET
MARION COUNTY

RECOMMENDED FOR APPROVAL: DESIGN ENGINEER #/#/# DATE	INDIANA DEPARTMENT OF TRANSPORTATION	HORIZONTAL SCALE: As Noted	BRIDGE FILE: I65-111-10613 BCD
		VERTICAL SCALE: N/A	DESIGNATION: 1901864
DESIGNED: B. WRIGHT DRAWN: L. KIRSCH	GENERAL PLAN - PLAN & ELEVATION VIEWS	SURVEY BOOK: ELECTRONIC	SHEET: 5 OF 14
CHECKED: M. EICHENAUER CHECKED: B. WRIGHT		CONTRACT: B-36910	PROJECT: 1600808

BFS NO. 6412

\\bfsn1241\Jobs5\641200.0000\ProjDevelopment\Design\Drawings\BRIDGES\06 OVER MICHIGAN STREET\Structure 1901864\1901864_S_BR_PLN01.dwg Dylan Piercefield Plot:2/24/2020 8:23 AM Save:2/24/2020 8:23 AM

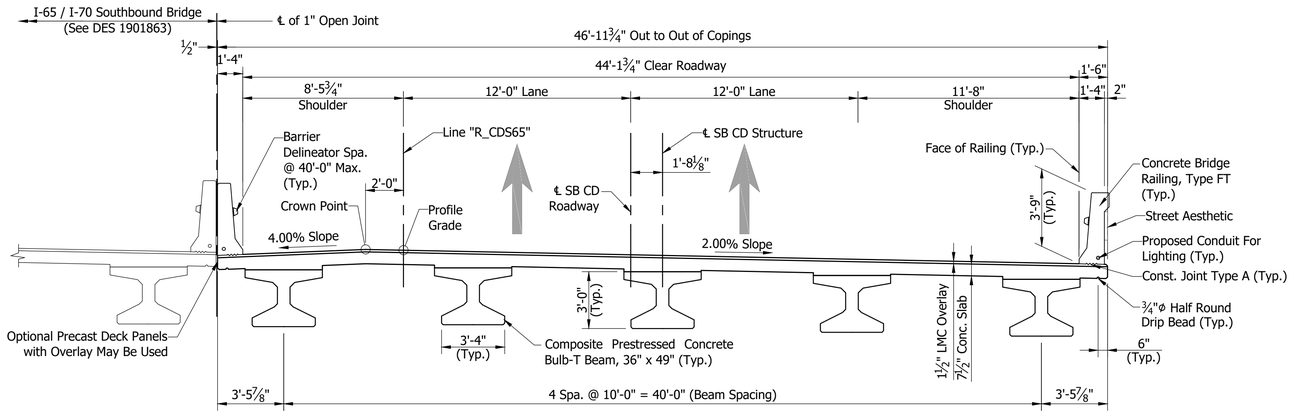

TYPICAL SECTION

Scale: 1/4"= 1'-0"

GENERAL NOTES

The existing structure shall be removed.

Reinforcing bars covering shall be 3 ½" in top and 1" min. in bottom of floor slabs and 3" in footings except bottom steel which shall be 4", and 2" in all other parts, unless noted.

Concrete in floor slab, and diaphragms, barriers, and end bents shall be an alternate Class C in accordance with the Technical Provisions.

Reinforcing Bars in Deck, Barrier, and End Bent Diaphragm Extending into the Deck shall be Stainless Steel. Reinforcing Bars in End Bent Diaphragm not Extending into the Deck and in the Cap shall be Epoxy Coated.

All exposed faces of the MSE walls and reinforced concrete bridge approach slabs shall receive surface seal.

See Bridge Aesthetic Plan for Architectural Details.

DESIGN DATA

LIVE LOAD:

Superstructure and Substructure Designed for HL-93 loading in accordance with the AASHTO LRFD Bridge Design Specifications, 8th Edition, 2017 and its subsequent revisions.

DEAD LOAD:

Designed for Actual Dead Load plus 35 psf of future wearing surface, and 15 psf for SIP Metal Deck Forms.

FLOOR SLAB:

Slab designed with a 7 ½" structural depth and a 1 ½" very early strength LMC wearing surface.

DESIGN STRESSES

CONSTRUCTION LOADING:

The exterior girder has been checked for strength, deflection, and overturning using the construction loads shown below. Cantilever overhang brackets were assumed for support of the deck overhang past the edge of the exterior beam. The finishing machine was assumed to be supported 6 in. outside the vertical coping form. The top overhang brackets were assumed to be located 6 in. past the edge of the vertical coping form. The bottom overhang brackets were assumed to be braced against the intersection of the girder bottom flange and web.

DECK FALSEWORK LOADS:

Designed for 15 psf for permanent metal stay-in-place deck forms, removable deck forms, and 2 ft. exterior walkway.

CONSTRUCTION LIVE LOAD:

Designed for 20 psf extending 2 ft. past the edge of coping and 75 lb/ft vertical force applied at a distance of 6 in. outside the face of coping over a 30 foot length of the deck centered with the finishing machine.

FINISHING-MACHINE LOAD:

4500 lb distributed over 10 ft. along the coping.

WIND LOAD:

Designed for 70 mph horizontal wind load in accordance with LRFD 3.8.1.

ULTIMATE DESIGN STRENGTHS:

Class "A" Concrete	f'c = 3,500 p.s.i.
Class "B" Concrete	f'c = 3,000 p.s.i.
Class "C" Concrete	f'c = 4,000 p.s.i.
Reinforcing Steel (Grade 60)	Fy = 60,000 p.s.i. (barrier)
	Fy = 75,000 p.s.i. (deck)
	Fy = 75,000 p.s.i. (all other locations)

SEISMIC DESIGN DATA:

Seismic Site Class	C
PGA (g)	0.051
S_s (g)	0.12
S_1 (g)	0.051
S_{D1} (g)	0.086
Seismic Design Category	A

PRESTRESSED COMPOSITE CONCRETE BULB-TEE BEAM BRIDGE
1 SPAN: 88'-6"
44'-1 3/4" CLEAR ROADWAY; SKEW: NO SKEW
I-65 / I-70 S.B. CD OVER MICHIGAN STREET
MARION COUNTY

RECOMMENDED FOR APPROVAL: _____ DESIGN ENGINEER #/#/# DATE

DESIGNED: B. WRIGHT DRAWN: L. KIRSCH
CHECKED: M. EICHENAUER CHECKED: B. WRIGHT

INDIANA
DEPARTMENT OF TRANSPORTATION

GENERAL PLAN - TYPICAL SECTION

HORIZONTAL SCALE	BRIDGE FILE
N/A	I65-111-10613 BCD
VERTICAL SCALE	DESIGNATION
N/A	1901864
SURVEY BOOK	SHEET
ELECTRONIC	6 OF 14
CONTRACT	PROJECT
B-36910	1600808

BFS NO. 6412

\\bfsn1241\Jobs5\641200.0000\ProDevelopment\Design\Drawings\BRIDGES\06 OVER MICHIGAN STREET\Structure 1901864\1901864_S_BR_PLN02.dwg Dylan Piercefield Plot:2/24/2020 6:27 AM Save:2/20/2020 4:13 PM

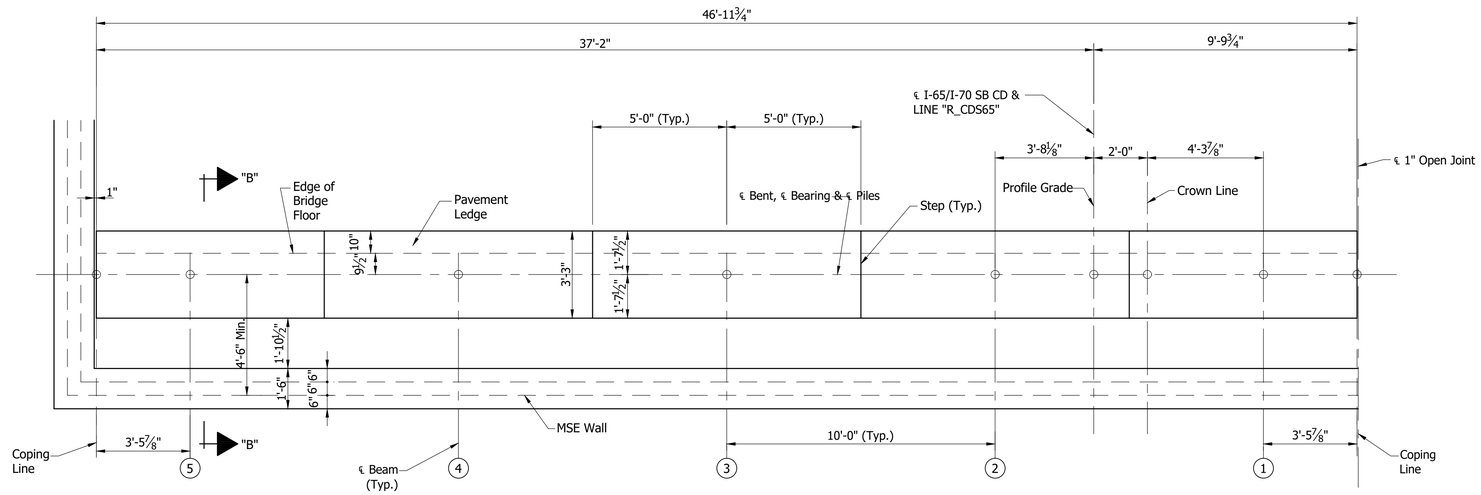

PLAN

BENT NO.1 SB (SHOWN)
BENT NO.2 SB (SIMILAR)
Scale: 3/8" = 1'-0"

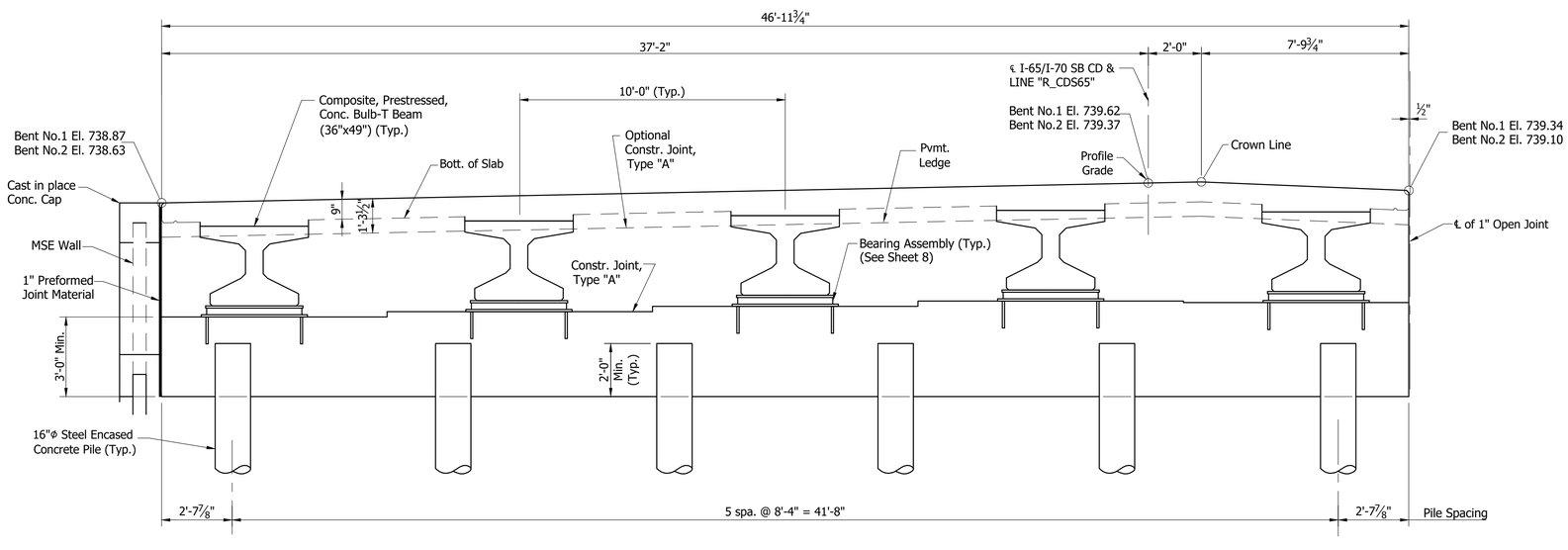

SECTION ALONG ℄ BENT
Scale: ⅜"=1'-0"

SEAT ELEVATIONS					
Beam No.	5	4	3	2	1
Bent No.1	734.58	734.78	734.98	735.18	735.12
Bent No.2	734.93	734.67	734.87	735.07	734.88

RECOMMENDED FOR APPROVAL: DESIGN ENGINEER DATE	INDIANA DEPARTMENT OF TRANSPORTATION	HORIZONTAL SCALE: N/A	BRIDGE FILE: I65-111-10613 BCD
		VERTICAL SCALE: N/A	DESIGNATION: 1901864
DESIGNED: V. SATHIRAJU DRAWN: M. SCOTT	BENTS NO. 1 AND NO. 2 DETAILS	SURVEY BOOK: ELECTRONIC	SHEET: 7 OF 14
CHECKED: B. WRIGHT CHECKED: B. WRIGHT		CONTRACT: B-36910	PROJECT: 1600808

BFS NO. 6412

\\bfsnt241\jobs5\641200.0000\ProjDevelopment\Design\Drawings\BRIDGES\06 OVER MICHIGAN STREET\Structure 1901864\1901864_S_BR_BNT01.dwg Dylan Piercefield Plot:2/24/2020 6:28 AM Save:2/18/2020 11:08 AM

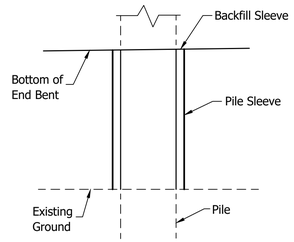

PILE SLEEVE DETAIL

Not to Scale

⊛ As an alternate a ⅞"Φx1'-3" Long Headed Automatic Welded Stud may be used.

⊗ Setting Tolerance of Bottom Plate-Level with to not more than 1/16" below top of Concrete.

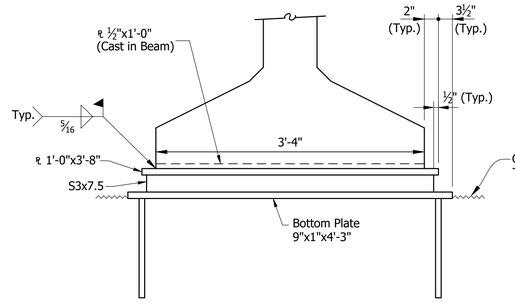

ELEVATION

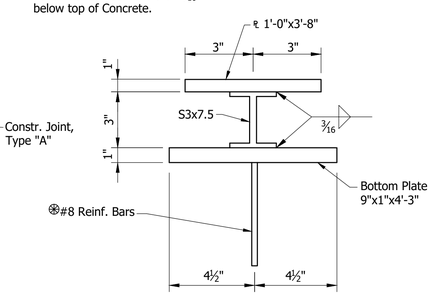

SECTION

BEARING ASSEMBLY

Not to Scale

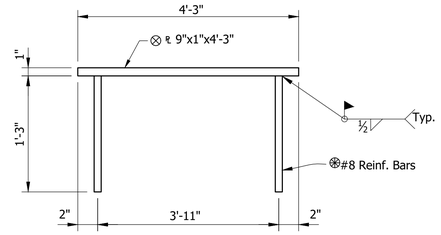

BOTTOM PLATE DETAIL

Not to Scale

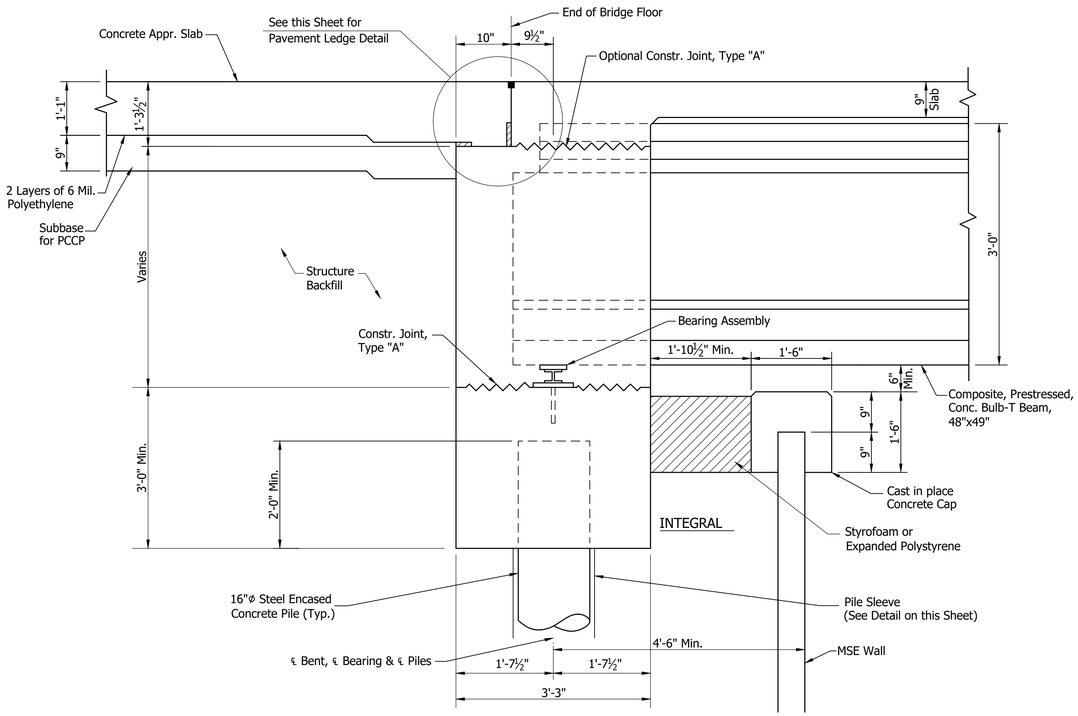

SECTION "B-B"

Not to Scale

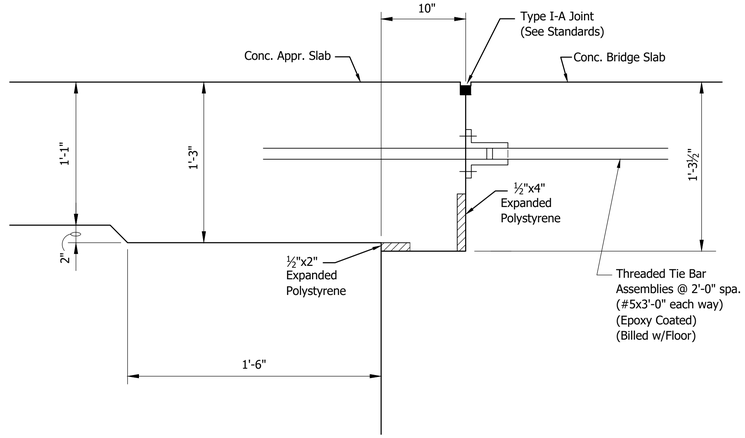

PAVEMENT LEDGE DETAIL

Not to Scale

RECOMMENDED FOR APPROVAL: DESIGN ENGINEER DATE	INDIANA DEPARTMENT OF TRANSPORTATION	HORIZONTAL SCALE: N/A	BRIDGE FILE: I65-111-10613 BCD	6412
		VERTICAL SCALE: N/A	DESIGNATION: 1901864	
DESIGNED: V. SATHIRAJU DRAWN: M. SCOTT	BENTS NO. 1 AND NO. 2 DETAILS	SURVEY BOOK: ELECTRONIC	SHEET: 8 OF 14	BFS NO.
CHECKED: B. WRIGHT CHECKED: B. WRIGHT		CONTRACT: B-36910	PROJECT: 1600808	

\\bfsn1241\Jobs5\641200.0000\ProDevelopment\Design\Drawings\BRIDGES\06_OVER MICHIGAN STREET\Structure 1901864\1901864_S_BR_BNT02.dwg Dylan Piercefield Plot:2/24/2020 6:28 AM Save:2/19/2020 2:48 PM

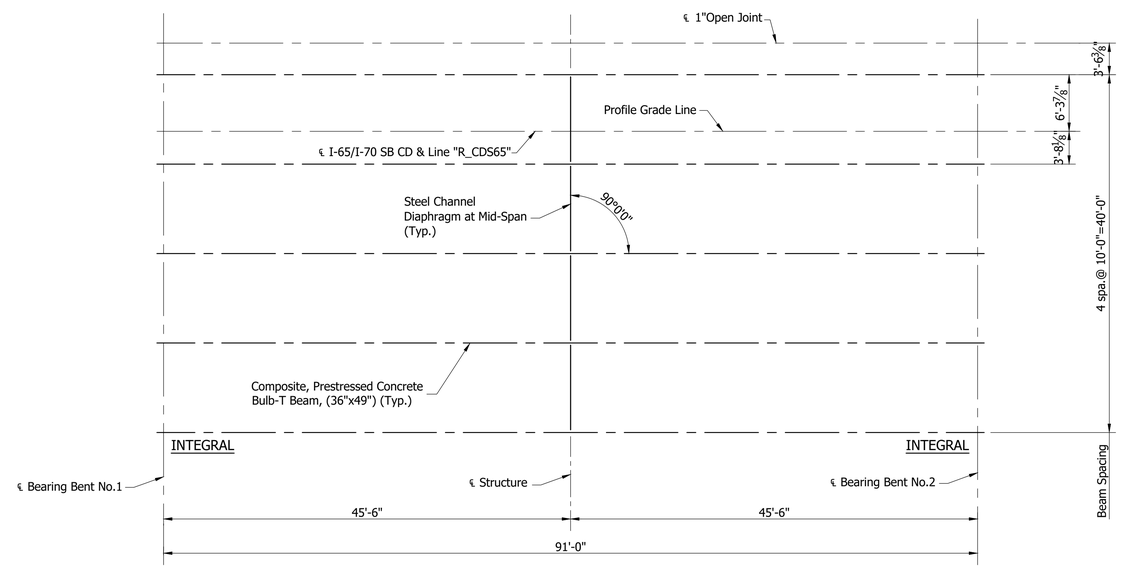

BEAM ERECTION PLAN

Scale: 1/8" = 1'-0"

RECOMMENDED FOR APPROVAL: DESIGN ENGINEER DATE	INDIANA DEPARTMENT OF TRANSPORTATION	HORIZONTAL SCALE: N/A	BRIDGE FILE: I65-111-10613 BCD
		VERTICAL SCALE: N/A	DESIGNATION: 1901864
DESIGNED: J. GOULD DRAWN: D. SHEETZ	FRAMING PLAN	SURVEY BOOK: ELECTRONIC	SHEET: 9 OF 14
CHECKED: B. WRIGHT CHECKED: B. WRIGHT		CONTRACT: B-36910	PROJECT: 1600808

BFS NO. 6412

\\bfsn\241\jobs5\641200.0000\ProDevelopment\Design\Drawings\BRIDGES\06 OVER MICHIGAN STREET\Structure 1901864\1901864_S_BR_FRM01.dwg Dylan Piercefield Plot:2/24/2020 6:28 AM Save:2/18/2020 11:11 AM

Notes:
Connect Angles to Beams with
7/8"ø H.S. Bolt with Hardened Washer, (ASTM F436)
Connect Channel to Angles with 7/8"ø H.S. Bolt
with Lock Nut, one Hardened Washer and
2 Washers 3"x5/16"x0'-3" (ASTM F436)

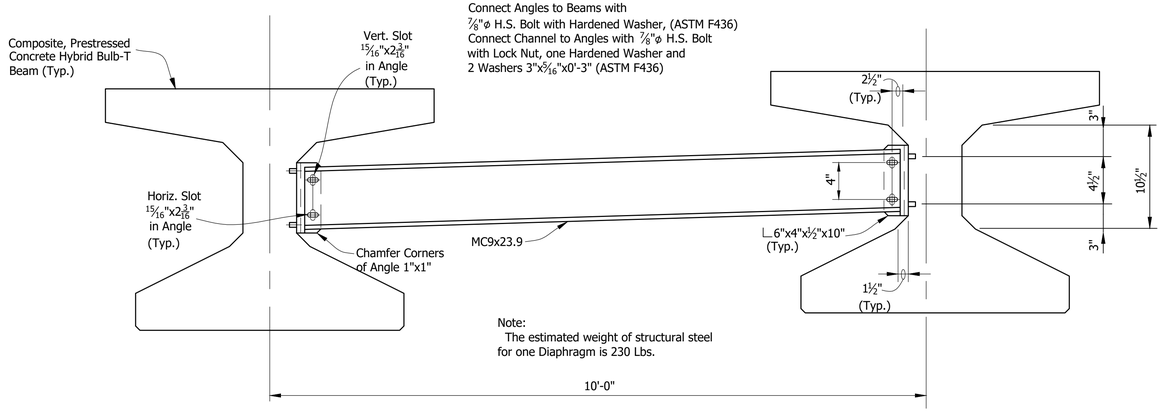

Note:
The estimated weight of structural steel
for one Diaphragm is 230 Lbs.

ELEVATION

Not to Scale

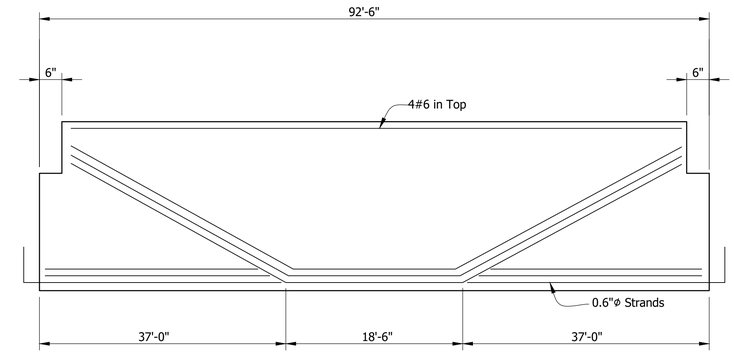

BEAM ELEVATION
SPAN "A"
SHOWING DRAPED STRANDS

Not to Scale

✳ Denotes Epoxy Coated

Note:
Bars 1" Clear
unless noted.

1. Surface Seal req'd on top of all Beams and Exterior Face of Exterior Beams
2. 1"ø Holes or 3/4"ø Inserts for Dowels at Bent or Pier. (See Beam Plans)
3. PL 1/2"x12"x3'-2 1/2" at End Bent Ends only

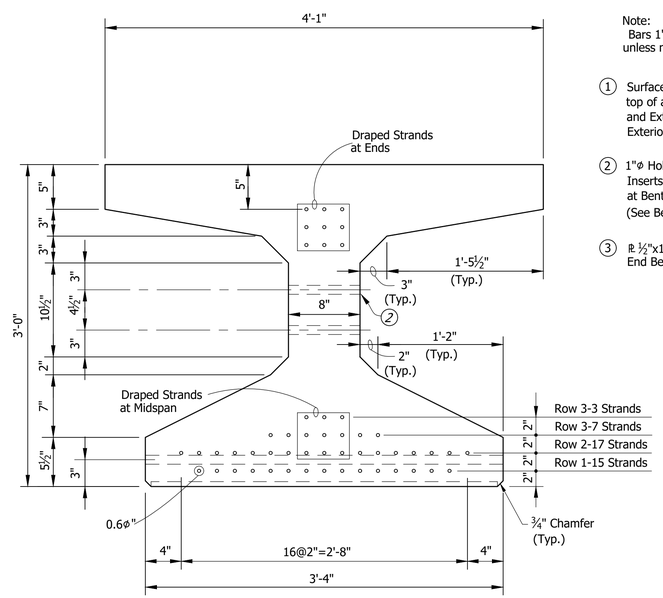

SECTION SHOWING STRANDS

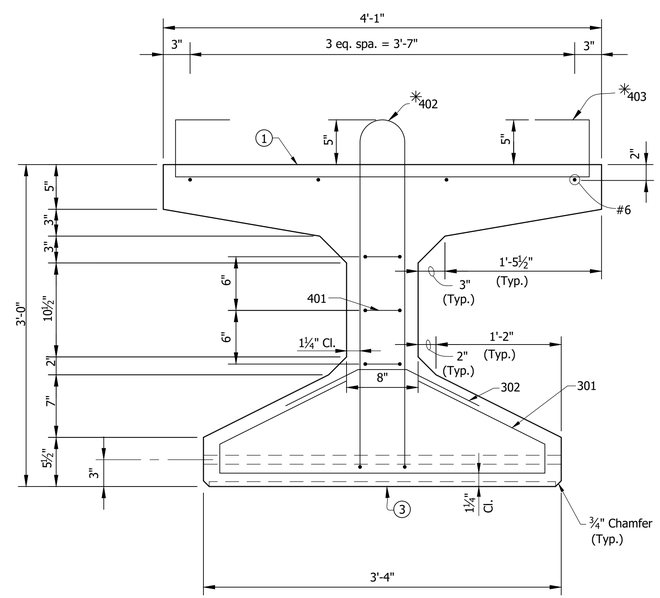

SECTION SHOWING REINFORCING

BEAM SECTIONS

Not to Scale

RECOMMENDED FOR APPROVAL: DESIGN ENGINEER DATE	INDIANA DEPARTMENT OF TRANSPORTATION	HORIZONTAL SCALE: N/A	BRIDGE FILE: 165-111-10613 BCD
		VERTICAL SCALE: N/A	DESIGNATION: 1901864
DESIGNED: J. GOULD DRAWN: D. PIERCEFIELD	BEAM DETAILS	SURVEY BOOK: ELECTRONIC	SHEET: 10 OF 14
CHECKED: B. WRIGHT CHECKED: B. WRIGHT		CONTRACT: B-36910	PROJECT: 1600808

BFS NO. 6412

\\bfsn1241\jobs5\641200.0000\ProjDevelopment\Design\Drawings\BRIDGES\06 OVER MICHIGAN STREET\Structure 1901864\1901864_S_BR_BM001.dwg Dylan Piercefield Plot:2/24/2020 6:28 AM Save:2/18/2020 11:12 AM

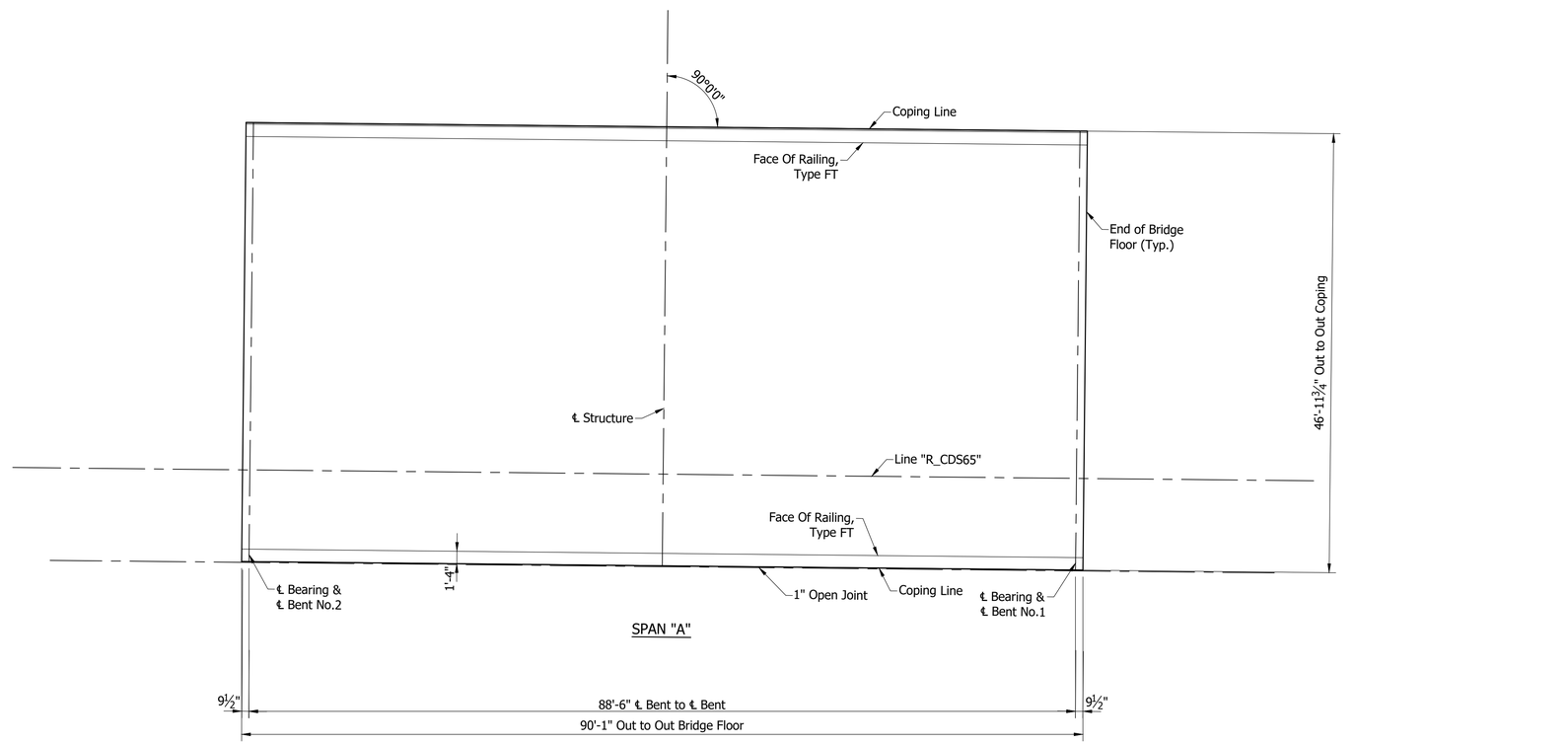

FLOOR PLAN

Scale: 1/8" = 1'-0"

NOTE:
See Sheet ___ For _____

	RECOMMENDED FOR APPROVAL: _____ DESIGN ENGINEER _____ DATE	INDIANA DEPARTMENT OF TRANSPORTATION	HORIZONTAL SCALE: As Noted	BRIDGE FILE: I65-111-10613 BCD
			VERTICAL SCALE: N/A	DESIGNATION: 1901864
	DESIGNED: V. SATHIRAJU DRAWN: D. PIERCEFIELD	FLOOR DETAILS	SURVEY BOOK: ELECTRONIC	SHEET: 11 OF 14
	CHECKED: B. WRIGHT CHECKED: B. WRIGHT		CONTRACT: B-36910	PROJECT: 1600808

6412

BFS NO.

\\bfsn1241\jobs5\641200.0000\ProjDevelopment\Design\Drawings\BRIDGES\06 OVER MICHIGAN STREET\Structure 1901864\1901864_S_BR_FLR01.dwg Dylan Piercefield Plot: 2/24/2020 6:28 AM Save: 2/3/2020 7:22 AM

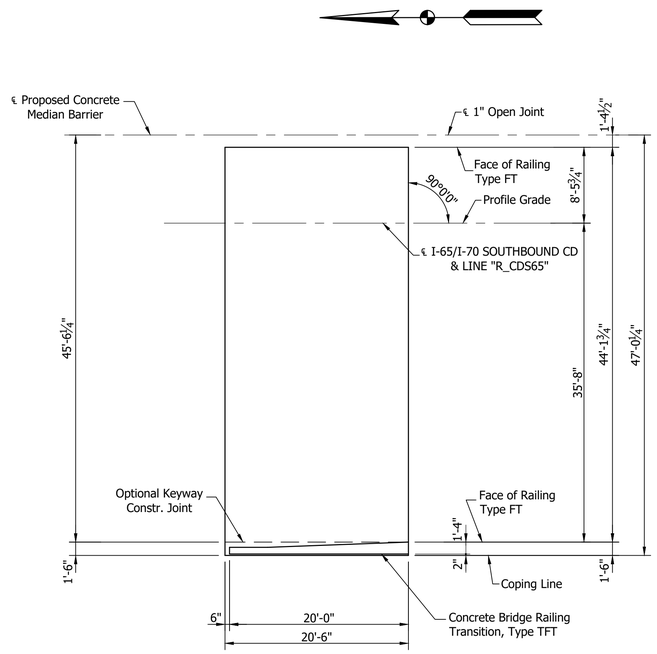

PLAN
NORTH SLAB (SHOWN)
SOUTH SLAB (OPP. HAND)
Scale: ⅛"=1'-0"

RECOMMENDED FOR APPROVAL: DESIGN ENGINEER DATE	INDIANA DEPARTMENT OF TRANSPORTATION	HORIZONTAL SCALE: N/A	BRIDGE FILE: I65-111-10613 BCD	6412
		VERTICAL SCALE: N/A	DESIGNATION: 1901864	
DESIGNED: D. SHEETZ DRAWN: D. SHEETZ	APPROACH SLAB	SURVEY BOOK: ELECTRONIC	SHEET: 12 OF 14	BFS NO.
CHECKED: B. WRIGHT CHECKED: M. MATEL		CONTRACT: B-36910	PROJECT: 1600808	

\\bfsn\241\Jobs5\641200.0000\Pro_Development\Design\Drawings\BRIDGES\06_OVER MICHIGAN STREET\Structure 1901864\1901864_S_BR_AP501.dwg Dylan Piercefield Plot:2/24/2020 6:28 AM Save:2/18/2020 11:16 AM

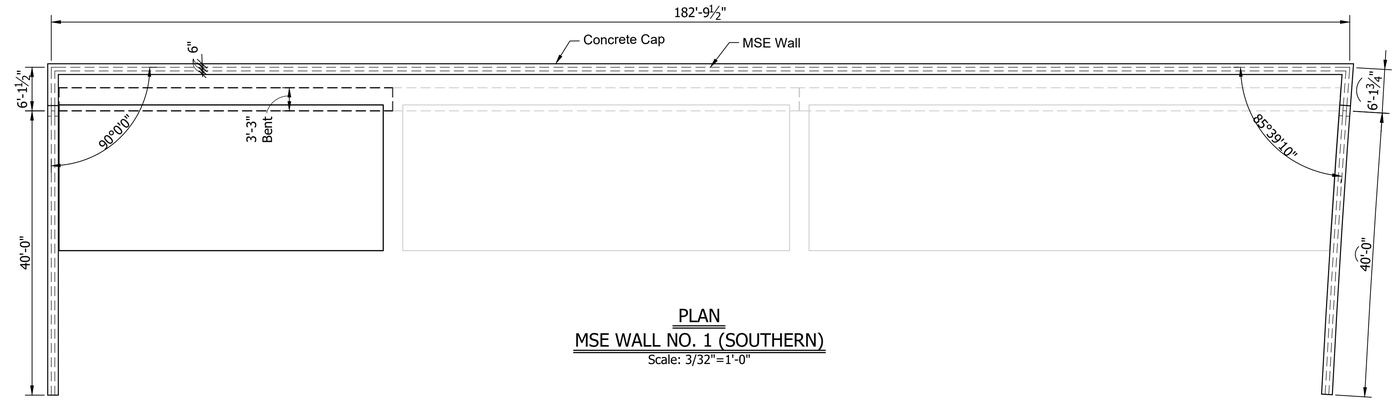

PLAN
MSE WALL NO. 1 (SOUTHERN)
Scale: 3/32"=1'-0"

NOTE:
Elevation Looking At Back Face of Wall

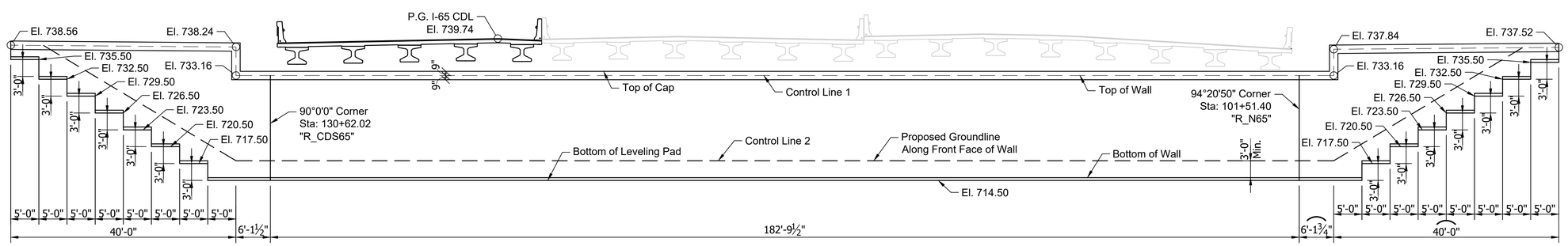

ELEVATION
MSE WALL NO. 1 (SOUTHERN)
Scale: 3/32"=1'-0"

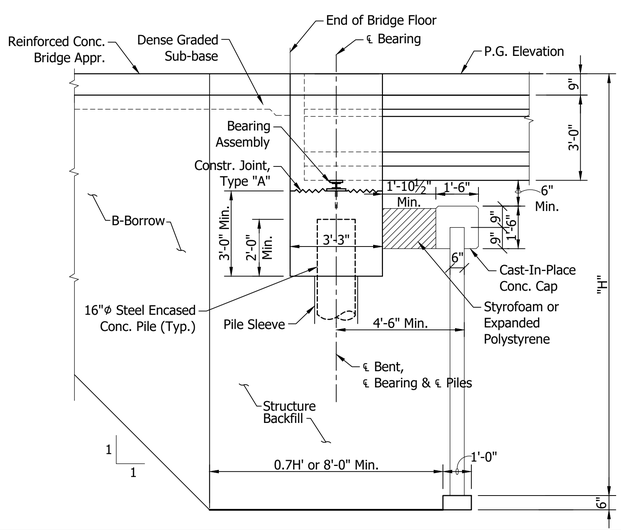

SECTION
MSE WALL NO. 1
Scale: 3/8"=1'-0"

RECOMMENDED FOR APPROVAL: DESIGN ENGINEER DATE	INDIANA DEPARTMENT OF TRANSPORTATION	HORIZONTAL SCALE: AS NOTED	BRIDGE FILE: I65-111-10613 BCD	
		VERTICAL SCALE: AS NOTED	DESIGNATION: 1901864	
DESIGNED: B. WRIGHT DRAWN: D. PIERCEFIELD	WALL LAYOUT	SURVEY BOOK: ELECTRONIC	SHEET: 13 OF 14	
CHECKED: M. EICHENAUER CHECKED: B. WRIGHT		CONTRACT: B-36910	PROJECT: 1600808	

BFS NO. 6412

\\bfsnt241\Jobs5\641200.0000\Proj\Development\Design\Drawings\BRIDGES\06 OVER MICHIGAN STREET\Structure 1901864\1901864_S_BR_WL01.dwg Dylan Piercefield Plot: 2/24/2020 6:28 AM Save: 2/19/2020 9:17 AM

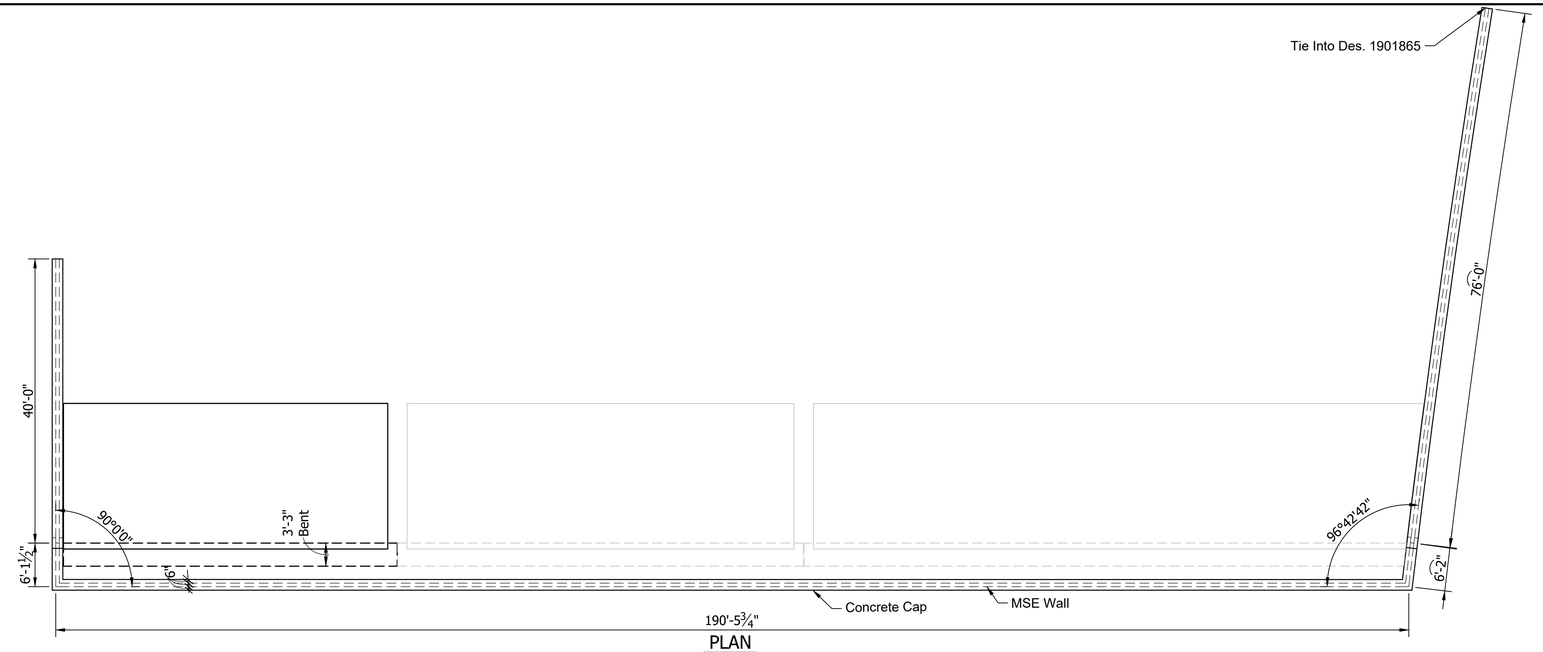

PLAN
MSE WALL NO. 2 (NORTHERN)
Scale: 3/32"=1'-0"

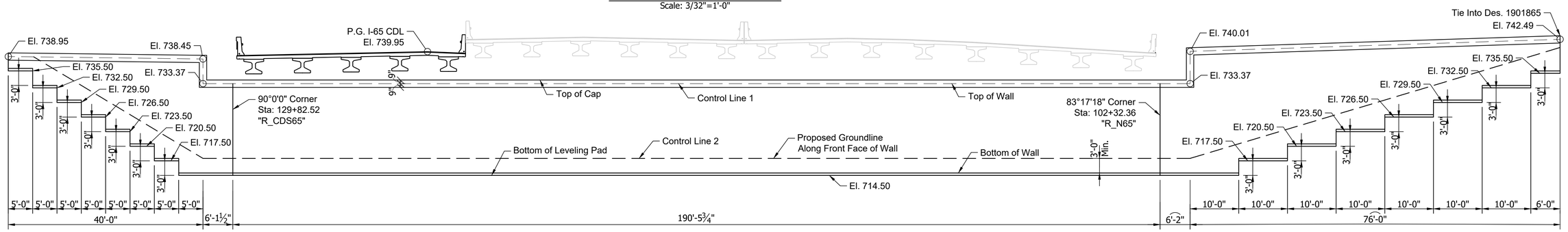

ELEVATION
MSE WALL NO. 2 (NORTHERN)
Scale: 3/32"=1'-0"

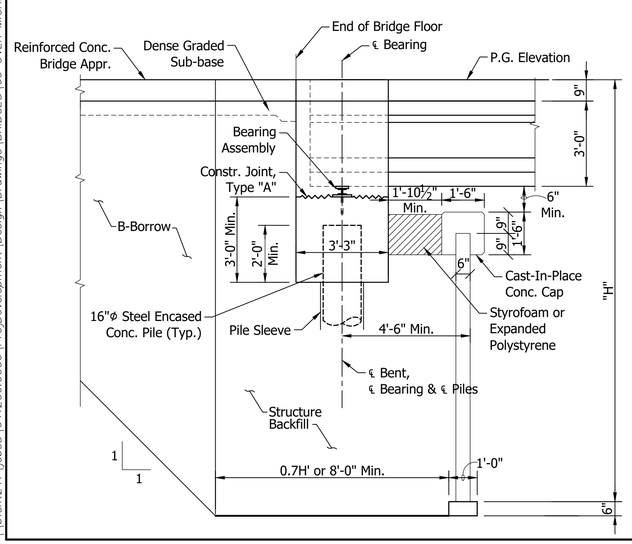

SECTION
MSE WALL NO. 2
Scale: 3/8"=1'-0"

RECOMMENDED FOR APPROVAL: DESIGN ENGINEER DATE	INDIANA DEPARTMENT OF TRANSPORTATION	HORIZONTAL SCALE: As Noted	BRIDGE FILE: I65-111-10613 BCD
		VERTICAL SCALE: N/A	DESIGNATION: 1901864
DESIGNED: B. WRIGHT DRAWN: D. PIERCEFIELD	WALL LAYOUT	SURVEY BOOK: ELECTRONIC	SHEET: 14 OF 14
CHECKED: M. EICHENAUER CHECKED: B. WRIGHT		CONTRACT: B-36910	PROJECT: 1600808

BFS NO. 6412

\\bfsn1241\Jobs5\641200.0000\Proj\Development\Design\Drawings\BRIDGES\06 OVER MICHIGAN STREET\Structure 1901864\1901864_S_BR_WL102.dwg Dylan Piercefield Plot: 2/24/2020 6:29 AM Save: 2/19/2020 10:45 AM

PROJECT	DESIGNATION
1600808	1901865
CONTRACT	BRIDGE FILE
B-36910	I65-111-10614 BNBL

INDIANA DEPARTMENT OF TRANSPORTATION

BRIDGE PLANS

FOR SPANS OVER 20 FEET

ROUTE: I-65 N.B. AT: RP 111+72

PROJECT NO. 1600808 (P.E. & CONSTR.)

STRUCTURE INFORMATION				
STRUCTURE	TYPE	SPAN AND SKEW	OVER	STATION
I65-111-10614 BNBL	CONTINUOUS COMPOSITE CONCRETE BULB TEE	TWO SPANS 176'-6", 176'-6" SKEW: 0°00'00"	I-70 E.B. RAMP	105+91.95 LINE "R_N65"

KIN PROJECT INFORMATION		
DESIGNATION	PROJECT DESCRIPTION	
1600808	COMPLETE ROAD RECONSTRUCTION OF I-65/I-70 FROM WASHINGTON STREET TO I-65 OVER DELAWARE STREET AND I-70 OVER VALLEY AVENUE	LEAD DES
1901935	ITS FOR I-65/I-70 FROM WASHINGTON STREET TO I-65 OVER DELAWARE STREET AND I-70 OVER VALLEY AVENUE	
1901936	SIGNS, LIGHTING, SIGNALS AND MARKING FOR I-65/I-70 FROM WASHINGTON STREET TO I-65 OVER DELAWARE STREET AND I-70 OVER VALLEY AVENUE	
1901847	BRIDGE REPLACEMENT ON I-65/I-70 NB OVER WASHINGTON STREET	
1901848	BRIDGE REPLACEMENT ON I-65/I-70 SB OVER WASHINGTON STREET	
1901849	BRIDGE REPLACEMENT ON I-65/I-70 SB CD OVER WASHINGTON STREET	
1901850	BRIDGE REPLACEMENT ON I-65/I-70 NB OVER MARKET STREET	
1901851	BRIDGE REPLACEMENT ON I-65/I-70 SB OVER MARKET STREET	
1901852	BRIDGE REPLACEMENT ON I-65/I-70 SB CD OVER MARKET STREET	
1901853	BRIDGE REPLACEMENT ON I-65/I-70 NB OVER CSX RAILROAD & OHIO STREET	
1901854	BRIDGE REPLACEMENT ON I-65/I-70 SB OVER CSX RAILROAD & OHIO STREET	
1901855	BRIDGE REPLACEMENT ON I-65/I-70 SB CD OVER CSX RAILROAD & OHIO STREET	
1901856	BRIDGE REPLACEMENT ON I-65/I-70 NB OVER NEW YORK STREET	
1901857	BRIDGE REPLACEMENT ON I-65/I-70 SB OVER NEW YORK STREET	
1901858	BRIDGE REPLACEMENT ON I-65/I-70 SB CD OVER NEW YORK STREET	
1901861	BRIDGE REPLACEMENT ON I-65/I-70 SB CD OVER VERMONT STREET	
1901862	BRIDGE REPLACEMENT ON I-65 NB/I-70 EB OVER MICHIGAN STREET	
1901863	BRIDGE REPLACEMENT ON I-65 SB/I-70 WB OVER MICHIGAN STREET	
1901864	BRIDGE REPLACEMENT ON I-65/I-70 SB CD OVER MICHIGAN STREET	
1901881	BRIDGE REPLACEMENT ON I-65 NB OVER ST. CLAIR STREET	
1901889	NEW BRIDGE CONSTRUCTION ON I-70 EB OVER ST. CLAIR STREET	
1901892	BRIDGE REPLACEMENT ON I-65 SB/I-70 WB OVER ST. CLAIR STREET	
1901896	NEW BRIDGE CONSTRUCTION ON SB CD OVER ST. CLAIR STREET	
1901897	BRIDGE REPLACEMENT ON I-65 NB OVER EAST 10TH STREET	
1901899	NEW BRIDGE CONSTRUCTION ON I-70 EB OVER EAST 10TH STREET	
1901901	BRIDGE REPLACEMENT ON I-65 SB OVER EAST 10TH STREET	
1901903	BRIDGE REPLACEMENT ON I-70 WB OVER EAST 10TH STREET	
1901905	NEW BRIDGE CONSTRUCTION ON SB CD & RAMP OVER EAST 10TH STREET	
1901906	NEW BRIDGE CONSTRUCTION ON I-65 NB CD EXIT RAMP OVER CENTRAL AVENUE	
1901907	BRIDGE REPLACEMENT ON I-65 NB OVER CENTRAL AVENUE	
1901908	BRIDGE REPLACEMENT ON I-65 SB OVER CENTRAL AVENUE	
1901909	NEW BRIDGE CONSTRUCTION ON I-65 SB CD ENTRANCE RAMP OVER CENTRAL AVENUE	
1901914	BRIDGE REPLACEMENT ON I-70 WB TO I-65 NB OVER COLLEGE AVENUE	
1901915	BRIDGE REPLACEMENT ON I-65 NB & PENNSYLVANIA EXIT RAMP OVER COLLEGE AVENUE	
1901917	BRIDGE REPLACEMENT ON I-65 SB & SB CD RAMP OVER COLLEGE AVENUE	
1901918	BRIDGE REPLACEMENT ON I-65 SB & DELAWARE ENTRANCE RAMP TO I-70 EB OVER COLLEGE AVENUE & FIVE RAMPS	
1901919	BRIDGE REPLACEMENT ON I-65 NB OVER I-70 WB & RAMP	
1901920	BRIDGE REPLACEMENT ON I-70 WB TO I-65 NB OVER THREE RAMPS	
1901921	BRIDGE REPLACEMENT ON I-65 SB OVER I-70 WB & SB CD RAMP	
1901922	NEW BRIDGE CONSTRUCTION ON I-70 EB OVER I-65 NB	
1901923	BRIDGE REPLACEMENT ON I-70 WB & SB CD OVER LEWIS STREET & MONON TRAIL	
1901925	NEW BRIDGE CONSTRUCTION ON I-70 WB TO I-65 NB OVER LEWIS STREET & MONON TRAIL	
1901927	BRIDGE REPLACEMENT ON I-65 SB TO I-70 EB OVER LEWIS STREET & MONON TRAIL	
1901928	BRIDGE REPLACEMENT ON I-70 EB OVER LEWIS STREET & MONON TRAIL	
1901929	PREVENTATIVE MAINTENANCE ON I-70 WB OVER ROOSEVELT AT COMMERCE AVENUE	
1901930	PREVENTATIVE MAINTENANCE ON I-70 EB OVER ROOSEVELT AT COMMERCE AVENUE	
1901931	PREVENTATIVE MAINTENANCE ON I-70 WB OVER VALLEY AVENUE	
1901932	PREVENTATIVE MAINTENANCE ON I-70 EB OVER VALLEY AVENUE	
1901933	REHABILITATE AND WIDEN ON I-65 OVER 7 STREETS, ACCESS RD, MONORAIL (AKA "MONSTER BRIDGE") - PENNSYLVANIA EXIT RAMP	
1901934	REHABILITATE AND WIDEN ON I-65 OVER 7 STREETS, ACCESS RD, MONORAIL (AKA "MONSTER BRIDGE) - DELAWARE ENTRANCE RAMP	
1902179	BRIDGE REPLACEMENT ON I-65 NB/I-70 EB OVER VERMONT STREET	
1902180	BRIDGE REPLACEMENT ON I-65 SB/I-70 WB OVER VERMONT STREET	

TRAFFIC DATA		I-65 N.B.	I-70 E.B. RAMP
A.A.D.T.	(2021)	34,480 V.P.D.	7,158 V.P.D.
A.A.D.T.	(2041)	41,090 V.P.D.	7,358 V.P.D.
D.H.V	(2041)	4,109 V.P.H.	1,398 V.P.H.
DIRECTIONAL DISTRIBUTION		100 %	100 %
TRUCKS		3 % D.H.V.	1 % D.H.V.
DESIGN DATA			
DESIGN SPEED		55 M.P.H.	45 M.P.H
PROJECT DESIGN CRITERIA		4R (FREEWAY)	4R (FREEWAY)
FUNCTIONAL CLASSIFICATION		FREEWAY	FREEWAY
RURAL/URBAN		URBAN	URBAN
TERRAIN		LEVEL	LEVEL
ACCESS CONTROL		FULL CONTROL	FULL CONTROL

NO ADDITIONAL RIGHT-OF-WAY REQUIRED FOR THIS PROJECT

BRIDGE REPLACMENT ON I-65 N.B. OVER I-70 E.B. RAMP, LOCATED 1.43 MILES NORTH OF I-70 (SOUTH SPLIT) INTERCHANGE, IN SECTION 1, OF TOWNSHIP 15 NORTH, RANGE 3 EAST, CENTER TOWNSHIPS, IN MARION COUNTY INDIANA.

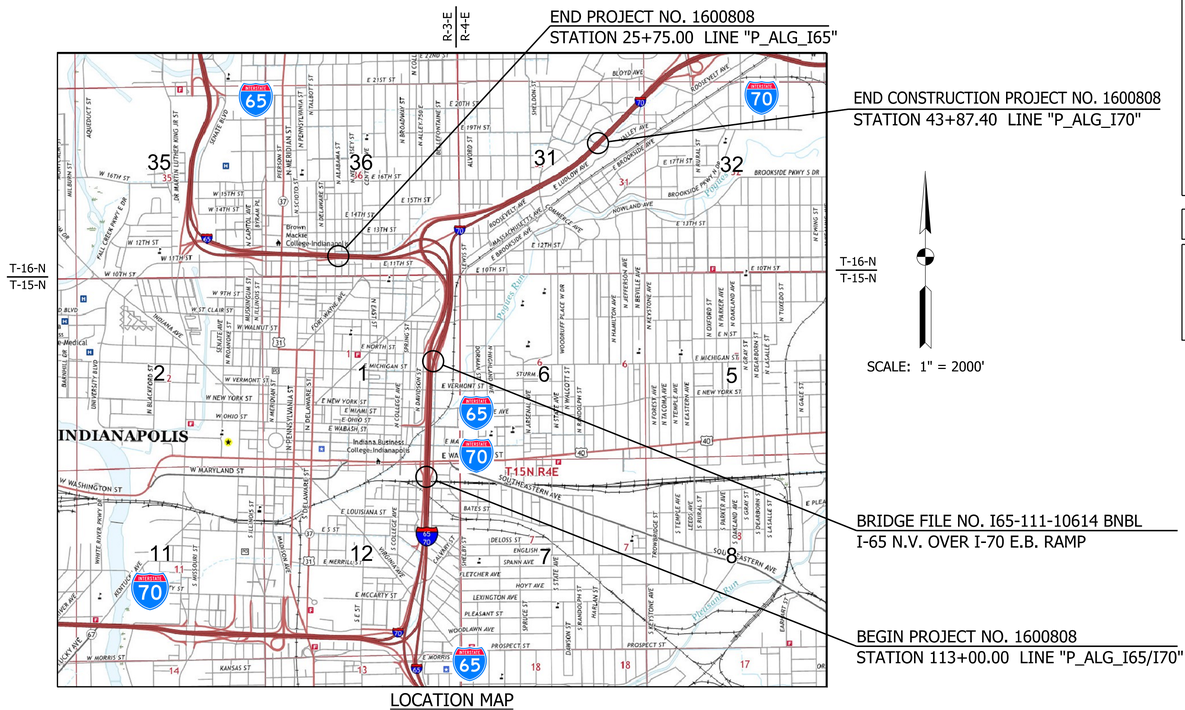

LOCATION MAP
(MARION COUNTY)

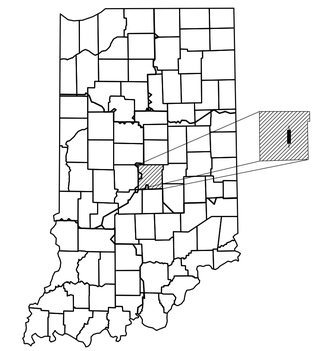

PROJECT LOCATION SHOWN BY MARION COUNTY

LATITUDE: 39°46'25.9" N LONGITUDE: 86°08'31.7" W

BRIDGE LENGTH:	0.068	MI.
ROADWAY LENGTH:	SEE ROAD PLANS	MI.
TOTAL LENGTH:	SEE ROAD PLANS	MI.
MAX. GRADE:	2.23	%

T-16-N
T-15-N

SCALE: 1" = 2000'

INDIANA DEPARTMENT OF TRANSPORTATION
STANDARD SPECIFICATIONS DATED 2020
TO BE USED WITH THESE PLANS

PRELIMINARY PLANS
NOT FOR CONSTRUCTION

SUPERIOR CONSTRUCTION

PLANS PREPARED BY: JANSSEN & SPAANS ENGINEERING (317) 254-9686
PHONE NUMBER

CERTIFIED BY: DATE

RECOMMENDED FOR LETTING: INDIANA DEPARTMENT OF TRANSPORTATION DATE

BRIDGE FILE
I65-111-10614 BNBL
DESIGNATION
1901865

SURVEY BOOK	SHEETS		
ELECTRONIC	1	of	16
CONTRACT	PROJECT		
B-36910	1600808		

Plot: 2/25/2020 3:58:39 PM

File: P:\1297 - I-65 I-70 North Split\DWGS\BRIDGE\B 17 I65 NB over I70 EB Entrance Ramp\1901865_01 - Title.dgn

UTILITIES

INDEX

SHEET NO.	SUBJECT
1	TITLE
2	INDEX
3	MAINTENANCE OF TRAFFIC LAYOUT OVER THE BRIDGE
4	LAYOUT
5	GENERAL PLAN
6	GENERAL PLAN - TYPICAL SECTION
7	BENT NO. 1 DETAILS
8	BENT NO. 3 DETAILS
9	BENT NO. 1 & 3 DETAILS
10	BENT NO. 2 DETAILS
11	FRAMING PLAN
12	BEAM DETAILS
13	SUPERSTRUCTURE DETAILS
14	APPROACH SLAB DETAILS
15	MSE WALL DETAILS AT BENT NO. 1
16	MSE WALL DETAILS AT BENT NO. 3

REVISIONS

SHEET NO.	DATE	REVISED

Know what's below.
Call before you dig.

INDIANA UNDERGROUND
1-800-382-5544 OR CALL 811
24 HOURS A DAY 7 DAYS A WEEK

RECOMMENDED FOR APPROVAL
DESIGN ENGINEER DATE

DESIGNED: SL DRAWN: SRR
CHECKED: CML CHECKED: SLL

INDIANA
DEPARTMENT OF TRANSPORTATION

INDEX

SCALE	BRIDGE FILE
	I65-111-10614 BNBL
	DESIGNATION
	1901865

SURVEY BOOK	SHEETS
ELECTRONIC	2 of 16
CONTRACT	PROJECT
B-36910	1600808

Plot: 2/25/2020 3:58:43 PM

File: P:\1297 - I-65 I-70 North Split\DWGS\BRIDGE\B 17 I65 NB over I70 EB Entrance Ramp\1901865_02 - Index.dgn

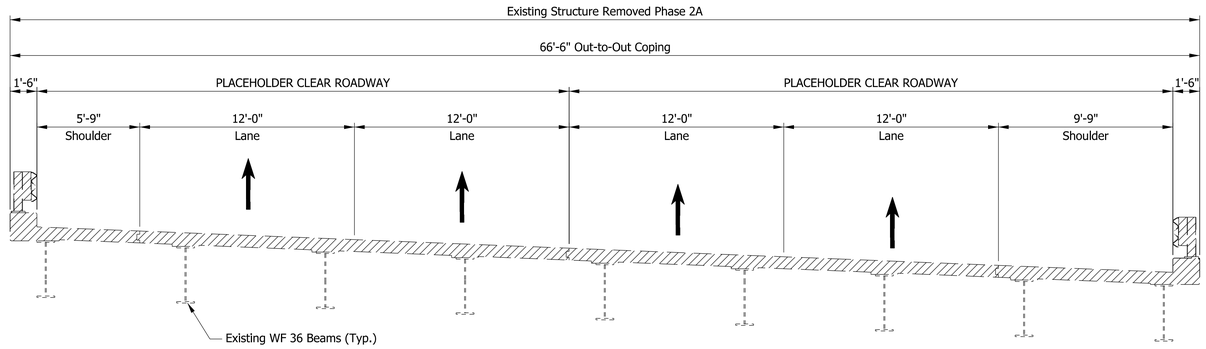

PHASE 2A

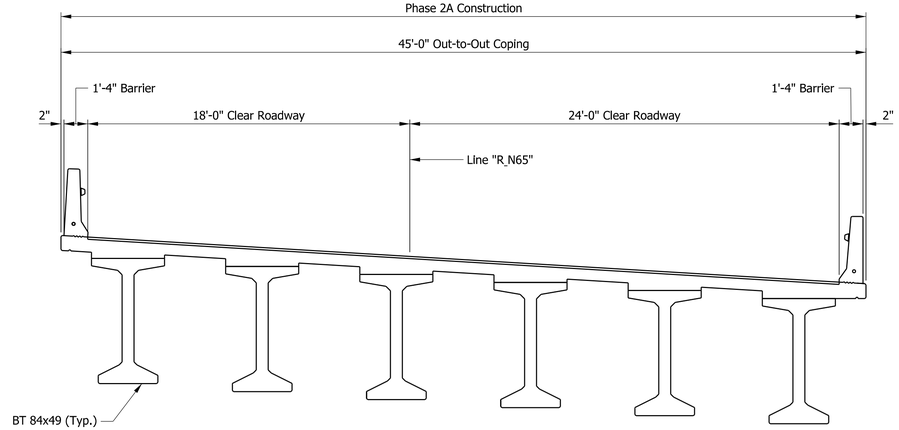

PHASE 2A

LEGEND

Limits of Removal

RECOMMENDED FOR APPROVAL ____ DESIGN ENGINEER DATE		INDIANA DEPARTMENT OF TRANSPORTATION	SCALE 1/4" = 1'-0" / BRIDGE FILE I65-111-10614 BNBL / DESIGNATION 1901865
DESIGNED: SL	DRAWN: SRR	MAINTENANCE OF TRAFFIC OVER THE BRIDGE	SURVEY BOOK / SHEETS
CHECKED: CML	CHECKED: SL		ELECTRONIC / 3 of 16
			CONTRACT B-36910 / PROJECT 1600808

Plot: 2/25/2020 3:58:44 PM

P:\1297 - I-65 I-70 North Split\DWGS\BRIDGE\B 17 I65 NB over I70 EB Entrance Ramp\1901865_03 - MOT.dgn

SECTION 1, T 15 N, R 3 E,
CENTER TOWNSHIP,
MARION COUNTY

HORIZONTAL CURVE DATA FOR LINE "R_N65"

P.I. = STA. 103+46.42 Line "R_N65"
R = 1986.00'
L = 685.95'
T = 346.42'
Δ= 19°47'22" RT
E = 29.99'

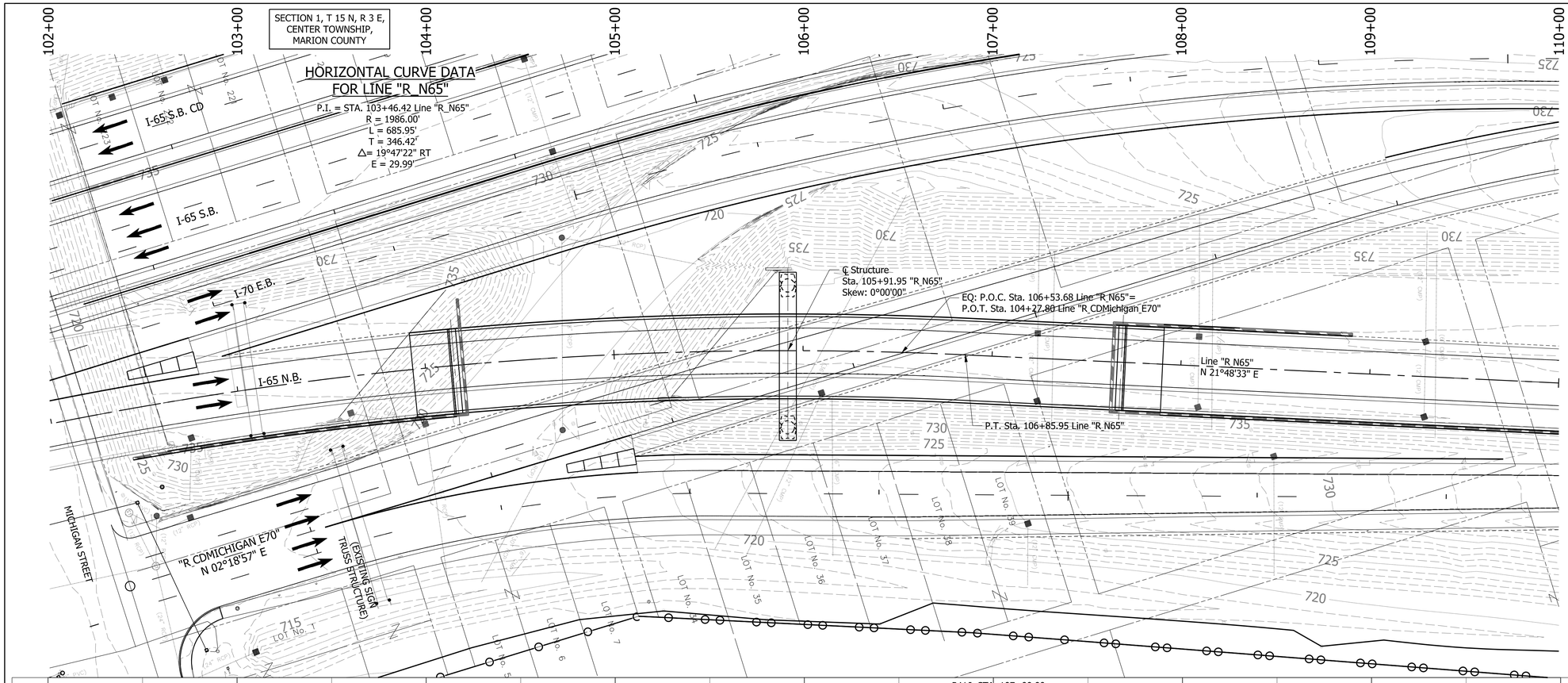

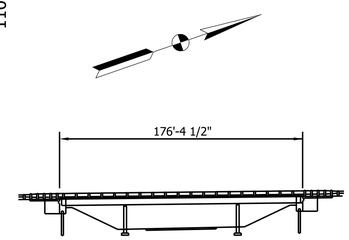

EXISTING STRUCTURE:

Existing structure built in 1974 is a continuous composite steel beam bridge. rehabilitated in 2003 with overlay and retrofited railing is a three span 45'-0", 82'-0", 45'-0", with a variable skew. The structure has a clear roadway width of 63'-6", Structure is to be removed.
Existing plans are on file with indiana Department of Transportation under Bridge File No. I-65-112-5734

EARTHWORK TABULATION:

Fill +20%	(See Road Plans)
Common Excavation	(See Road Plans)
Surplus Foundation Excavation (70%)	(See Road Plans)
Borrow	(See Road Plans)
Excavation Unclassified	(See Road Plans)
Benching (Estimated)	(See Road Plans)

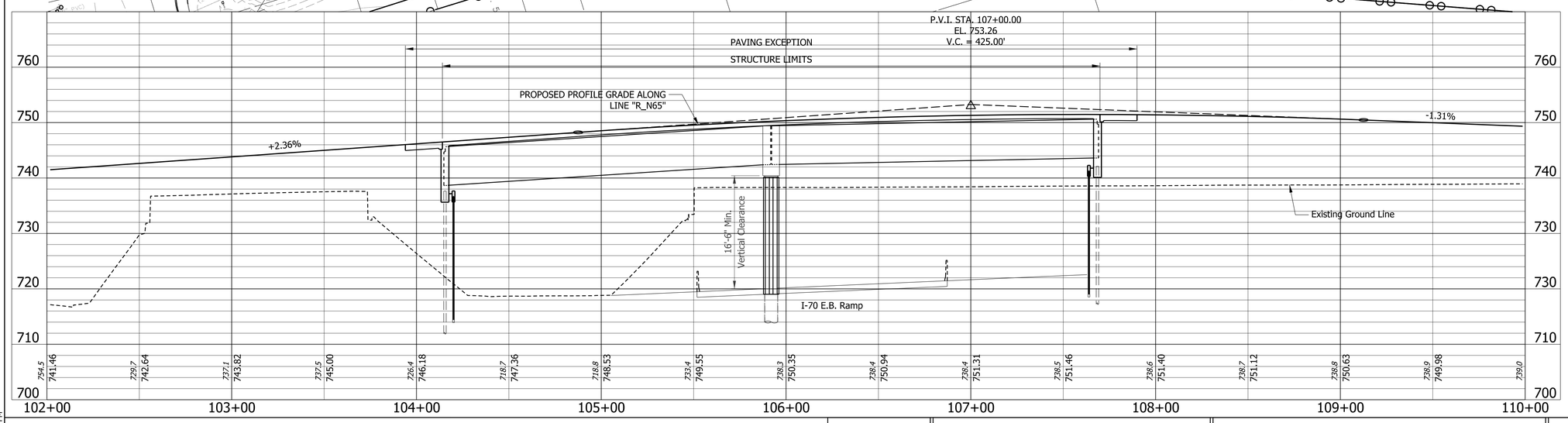

NOTES:

1. See sheet 2 for utility owners.
2. All r/w shall be as shown.
4. There shall be no clearing of trees beyond construction limits.
5. All topography is existing.
6. All R/W described from line "R_E70", except as noted.

CONTINUOUS COMPOSITE
PRESTRESSED CONCRETE
BULB TEE BEAM
2 SPANS: 176'-6", 176'-6"
SKEW: 0°00'00"
CLEAR ROADWAY: 42'-0"
I-65 N.B. OVER I-70 E.B. RAMP
MARION COUNTY

RECOMMENDED FOR APPROVAL _____ DESIGN ENGINEER DATE

DESIGNED: SL DRAWN: SRR
CHECKED: CML CHECKED: SL

INDIANA
DEPARTMENT OF TRANSPORTATION

LAYOUT

HORIZONTAL SCALE	BRIDGE FILE
1" = 30'-0"	I65-111-10614 BNBL
VERTICAL SCALE	DESIGNATION
1" = 10'-0"	1901865
SURVEY BOOK	SHEETS
ELECTRONIC	4 of 16
CONTRACT	PROJECT
B-36910	1600808

Plot: 2/25/2020 3:58:50 PM

P:\1297 - I-65 I-70 North Split\DWGS\BRIDGE\B 17 I65 NB over I70 EB Entrance Ramp\1901865_04 - Layout.dgn

STRUCTURE BUILT TO 425' VERTICALS CURVE

P.V.I. Sta. 107+00.00
P.V.I. Elev. 753.26
V.C. = 425'

+2.23% -1.31%

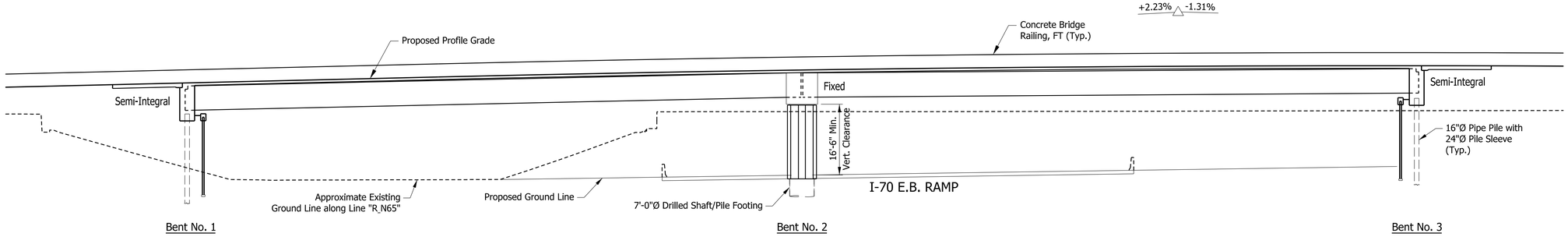

ELEVATION

CURVE DATA
P.I. Sta. 103+46.42 "R_N65"
Delta = 19°47'22" Rt.
R = 1986.00'
T = 346.42'
L = 685.95'
E = 29.99'

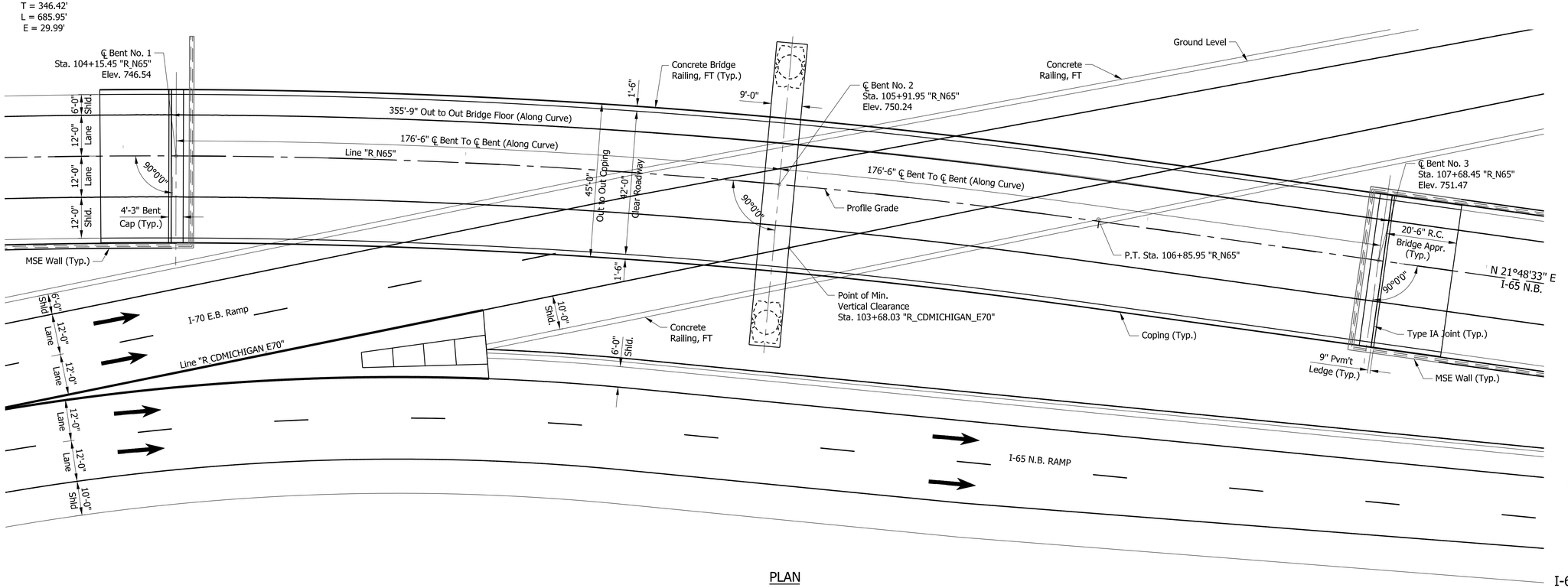

PLAN

CONTINUOUS COMPOSITE
PRESTRESSED CONCRETE
BULB TEE BEAM
2 SPANS: 176'-6", 176'-6"
SKEW: 0°00'00"
CLEAR ROADWAY: 42'-0"
I-65 N.B. OVER I-70 E.B. RAMP
MARION COUNTY

RECOMMENDED FOR APPROVAL — DESIGN ENGINEER — DATE	INDIANA DEPARTMENT OF TRANSPORTATION	SCALE: 1/16" = 1'-0"	BRIDGE FILE: I65-111-10614 BNBL
			DESIGNATION: 1901865
DESIGNED: SL / DRAWN: SRR	GENERAL PLAN	SURVEY BOOK	SHEETS
CHECKED: CML / CHECKED: SL		ELECTRONIC	5 of 16
		CONTRACT	PROJECT
		B-36910	1600808

Plot: 2/25/2020 3:59:22 PM

P:\1297 - I-65 I-70 North Split\DWGS\BRIDGE\B 17 I65 NB over I70 EB Entrance Ramp\1901865_05 - General Plan.dgn

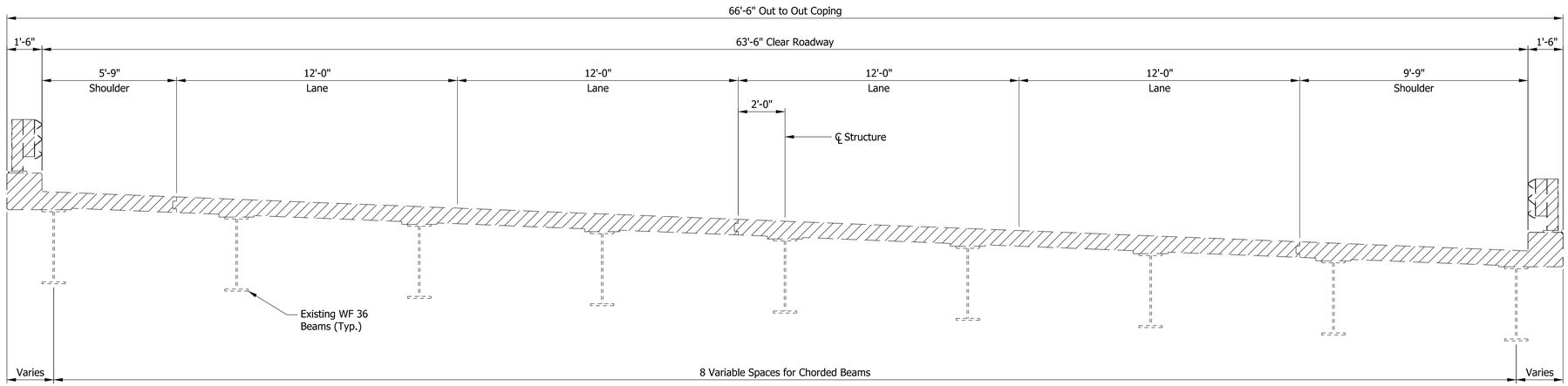

EXISTING TYPICAL SECTION

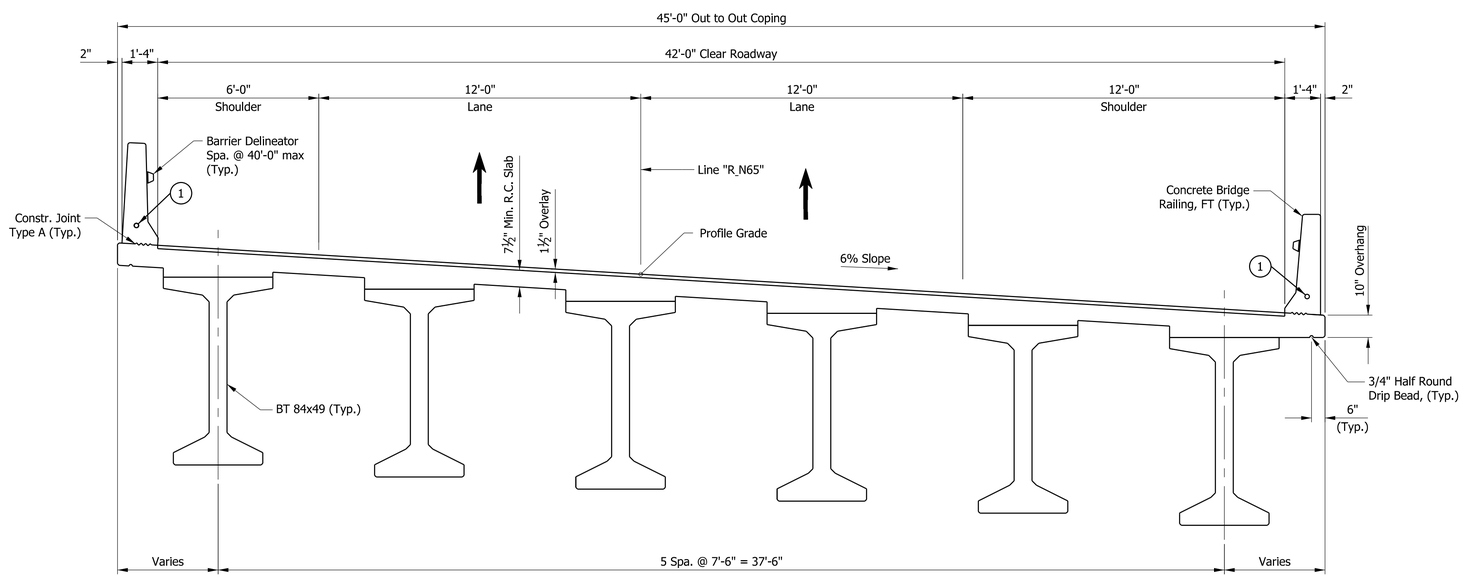

PROPOSED TYPICAL SECTION

GENERAL NOTES

Reinforcing bar covering shall be 3 1/2" in top and 1" min. in bottom of floor slabs, 3" in footings except bottom steel which shall be 4", and 2" in all other parts, unless noted.

Concrete in floor slab, diaphragms, barriers, and end bents shall be an alternate Class C in accordance with the Technical Provisions.

Reinforcing Bars in Deck, Barrier, and End Bent Diaphragm Extending into the Deck shall be Stainless Steel. Reinforcing Bars in End Bent Diaphragm not Extending into the Deck and in the Cap shall be Epoxy Coated.

All exposed faces of the MSE walls and reinforced concrete bridge approach slabs shall receive surface seal.

DESIGN DATA

Live Load: Superstructure and substructure designed for HL-93 loading in accordance with AASHTO LRFD Bridge Design Specifications, 8th Edition, 2017, and it's subsequent interims.

Dead Load: Designed for actual dead load plus 15 Psf. for SIP Metal Deck Forms.

Slab designed with a 7 1/2" structural slab and a 1 1/2" integral wearing surface.

SEISMIC DESIGN DATA

Seismic Performance Zone = 1
Acceleration Coefficient = 0.061
Seismic Soil Profile Type = Site Class C

ULTIMATE DESIGN STRESSES

Class "A" Concrete	f'c = 3,500 p.s.i.
Class "B" Concrete	f'c = 3,000 p.s.i.
Class "C" Concrete	f'c = 4,000 p.s.i.
	fy = 60,000 p.s.i. (Barrier)
Reinforcing Bars	fy = 75,000 p.s.i. (All other locations)
Prestressed Concrete	f'c = 10,000 p.s.i.
	f'ci = 8,000 p.s.i. [Release]
Straddel Bent Cap Concrete	f'c = 5,000 p.s.i.

CONSTRUCTION LOADING

The exterior girder has been checked for strength, deflection, and overturning using the constructions loads shown below. Cantilever overhang brackets were assumed for support of the deck overhang past the edge of the exterior girder. The finishing machine was assumed to be supported 6 in. outside the vertical coping form. The top overhang brackets were assumed to be located 6 in. past the edge of the vertical coping form. The bottom overhang brackets were assumed to be braced against the intersection of the girder bottom flange and web.

Deck Falsework Loads:	Designed for 15 lb/ft² for permanent metal stay-in-place deck forms, removable deck forms, and 2 ft. exterior walkway.
Construction Live Load:	Designed for 20 lb/ft² extending 2 ft. past the edge of coping and 75 lb/ft vertical force applied at a distance of 6 in. outside the face of coping over a 30 ft. length of the deck centered with the finishing machine.
Finishing-Machine Load:	4,500 lb distributed over 10 ft. along the coping.
Wind Load:	Designed for 70 mph horizontal wind loading in accordance with LRFD 3.8.1

LEGEND

Limits of Removal

(1) Conduit for lighting

CONTINUOUS COMPOSITE
PRESTRESSED CONCRETE
BULB TEE BEAM
2 SPANS: 176'-6", 176'-6"
SKEW: 0°00'00"
CLEAR ROADWAY: 42'-0"
I-65 N.B. OVER I-70 E.B. RAMP
MARION COUNTY

RECOMMENDED FOR APPROVAL _____ DESIGN ENGINEER DATE

DESIGNED: SL DRAWN: SRR
CHECKED: CML CHECKED: SL

INDIANA
DEPARTMENT OF TRANSPORTATION

GENERAL PLAN
TYPICAL SECTION

SCALE	BRIDGE FILE
3/8" = 1'-0"	I65-111-10614 BNBL
	DESIGNATION
	1901865
SURVEY BOOK	SHEETS
ELECTRONIC	6 of 16
CONTRACT	PROJECT
B-36910	1600808

Plot: 2/25/2020 3:59:23 PM

P:\1297 - I-65 I-70 North Split\DWGS\BRIDGE\B 17 I65 NB over I70 EB Entrance Ramp\1901865_06 - Typical Section.dgn

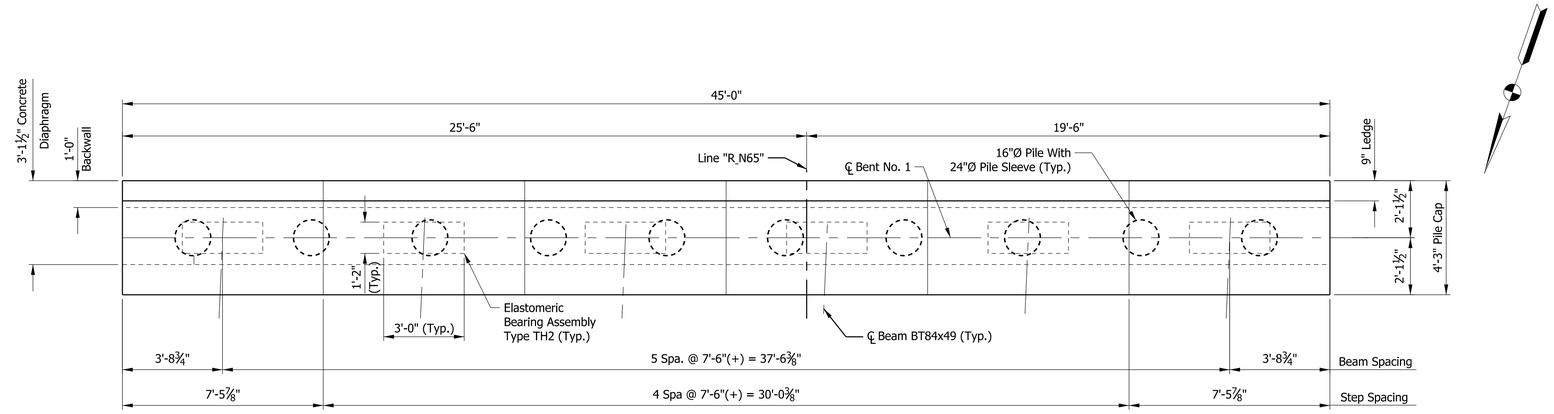

PLAN

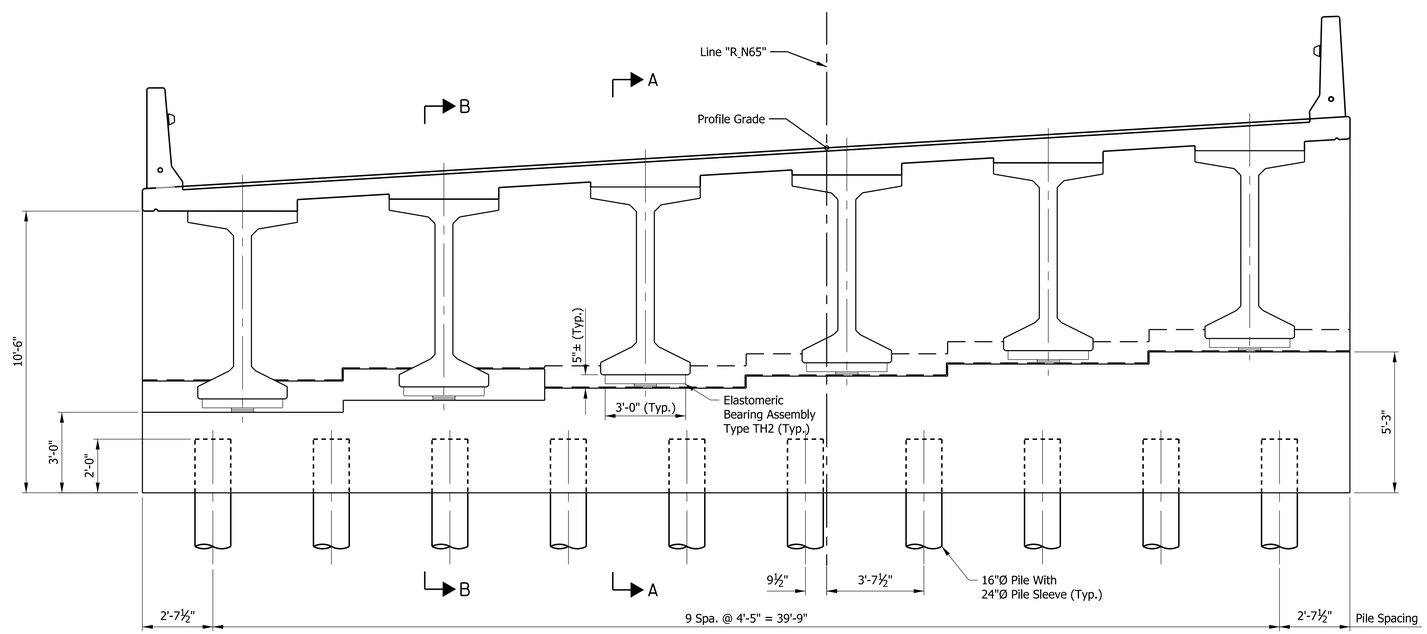

ELEVATION

RECOMMENDED FOR APPROVAL ____ DESIGN ENGINEER DATE	INDIANA DEPARTMENT OF TRANSPORTATION	SCALE 3/8" = 1'-0"	BRIDGE FILE I65-111-10614 BNBL
			DESIGNATION 1901865
DESIGNED: SL / DRAWN: SRR	BENT NO. 1 DETAILS	SURVEY BOOK ELECTRONIC	SHEETS 7 of 16
CHECKED: CML / CHECKED: SL		CONTRACT B-36910	PROJECT 1600808

Plot: 2/25/2020 3:59:25 PM

P:\1297 - I-65 I-70 North Split\DWGS\BRIDGE\B 17 I65 NB over I70 EB Entrance Ramp\1901865_07 - Bent No. 1 Details.dgn

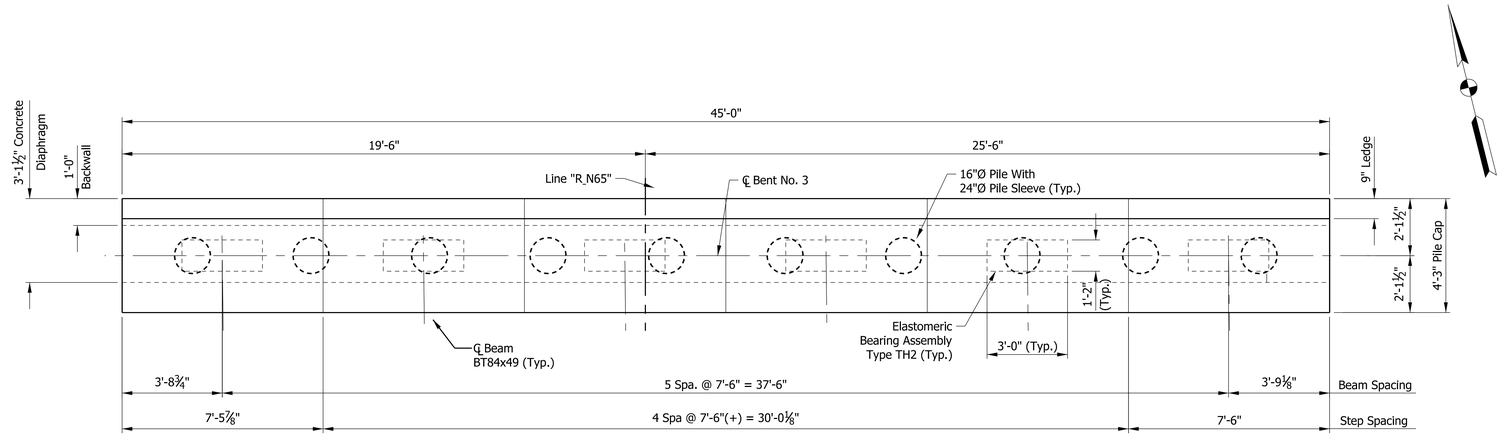

PLAN

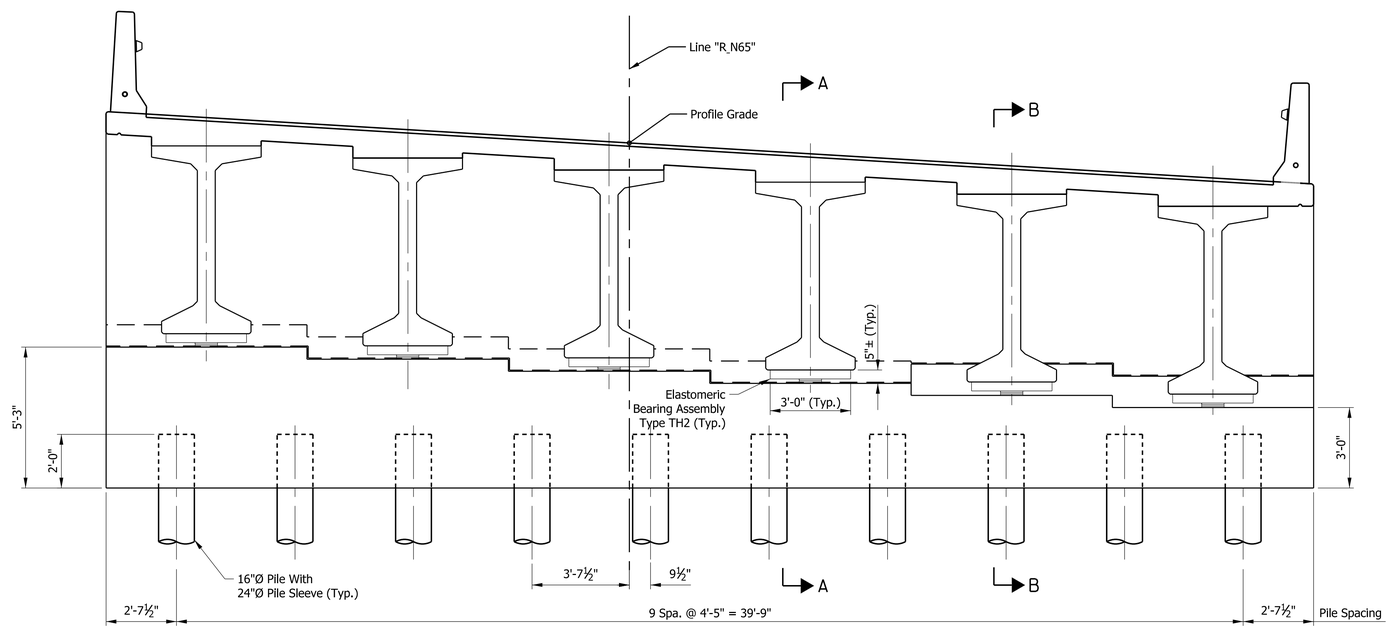

ELEVATION

RECOMMENDED FOR APPROVAL _____ DESIGN ENGINEER DATE	INDIANA DEPARTMENT OF TRANSPORTATION	SCALE 3/8" = 1'-0"	BRIDGE FILE I65-111-10614 BNBL
			DESIGNATION 1901865
DESIGNED: SL	DRAWN: SRR	BENT NO. 3 DETAILS	SURVEY BOOK / SHEETS
CHECKED: CML	CHECKED: SL		ELECTRONIC 8 of 16
			CONTRACT / PROJECT
			B-36910 / 1600808

Plot: 2/25/2020 3:59:26 PM

P:\1297 - I-65 I-70 North Split\DWGS\BRIDGE\B 17 I65 NB over I70 EB Entrance Ramp\1901865_08 - Bent No. 3 Details.dgn

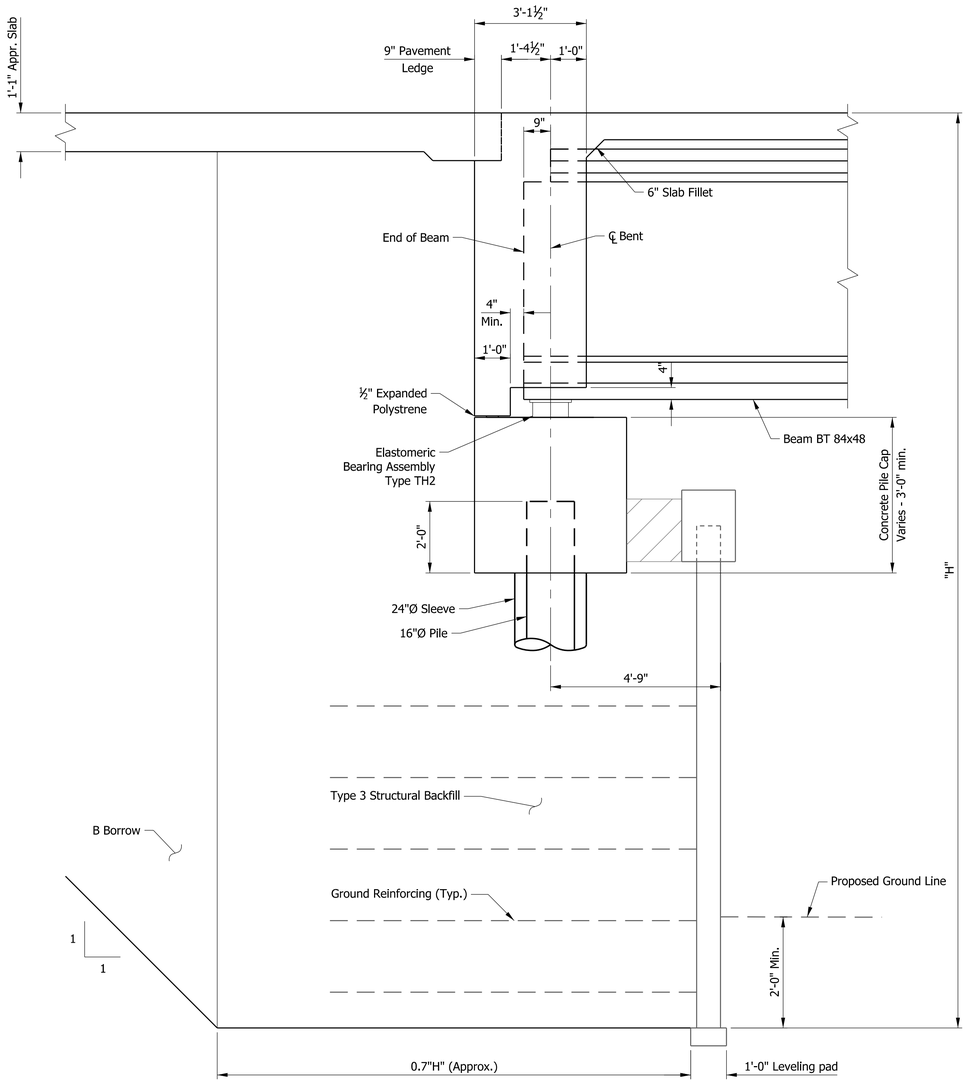

SECTION A-A

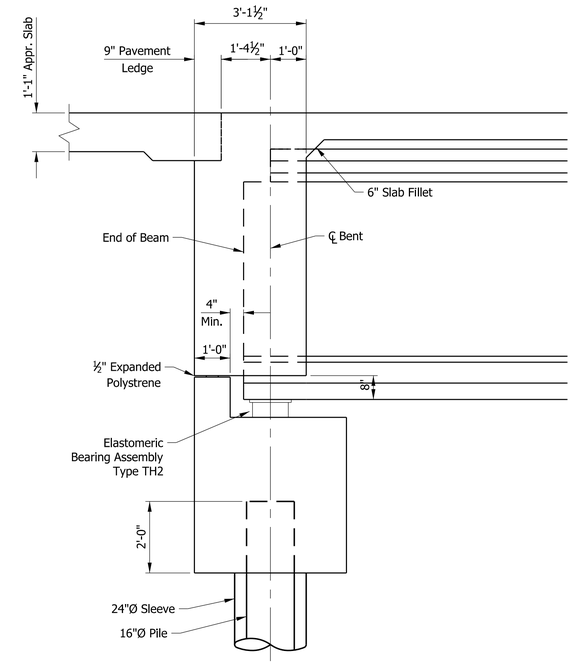

SECTION B-B

(MSE Wall not shown for clarity)

RECOMMENDED FOR APPROVAL ____ DESIGN ENGINEER DATE	INDIANA DEPARTMENT OF TRANSPORTATION	SCALE 1/2" = 1'-0"	BRIDGE FILE I65-111-10614 BNBL
			DESIGNATION 1901865
DESIGNED: SL DRAWN: SRR	BENT NO. 1 AND 3 DETAILS	SURVEY BOOK ELECTRONIC	SHEETS 9 of 16
CHECKED: CML CHECKED: SL		CONTRACT B-36910	PROJECT 1600808

Plot: 2/25/2020 3:59:28 PM

P:\1297 - I-65 I-70 North Split\DWGS\BRIDGE\B 17 I65 NB over I70 EB Entrance Ramp\1901865_09 - Bent No. 1 & 3 Details.dgn

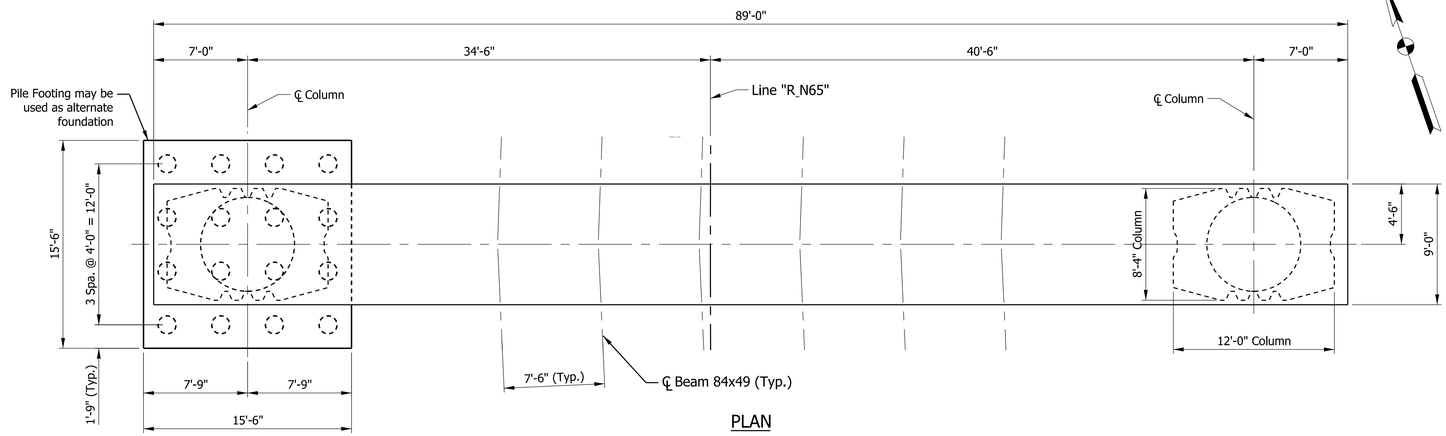

PLAN

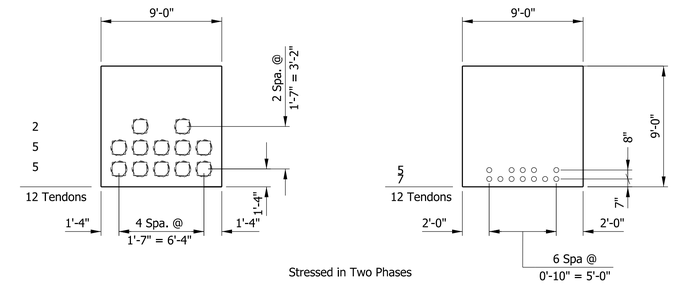

VIEW A-A

SECTION B-B

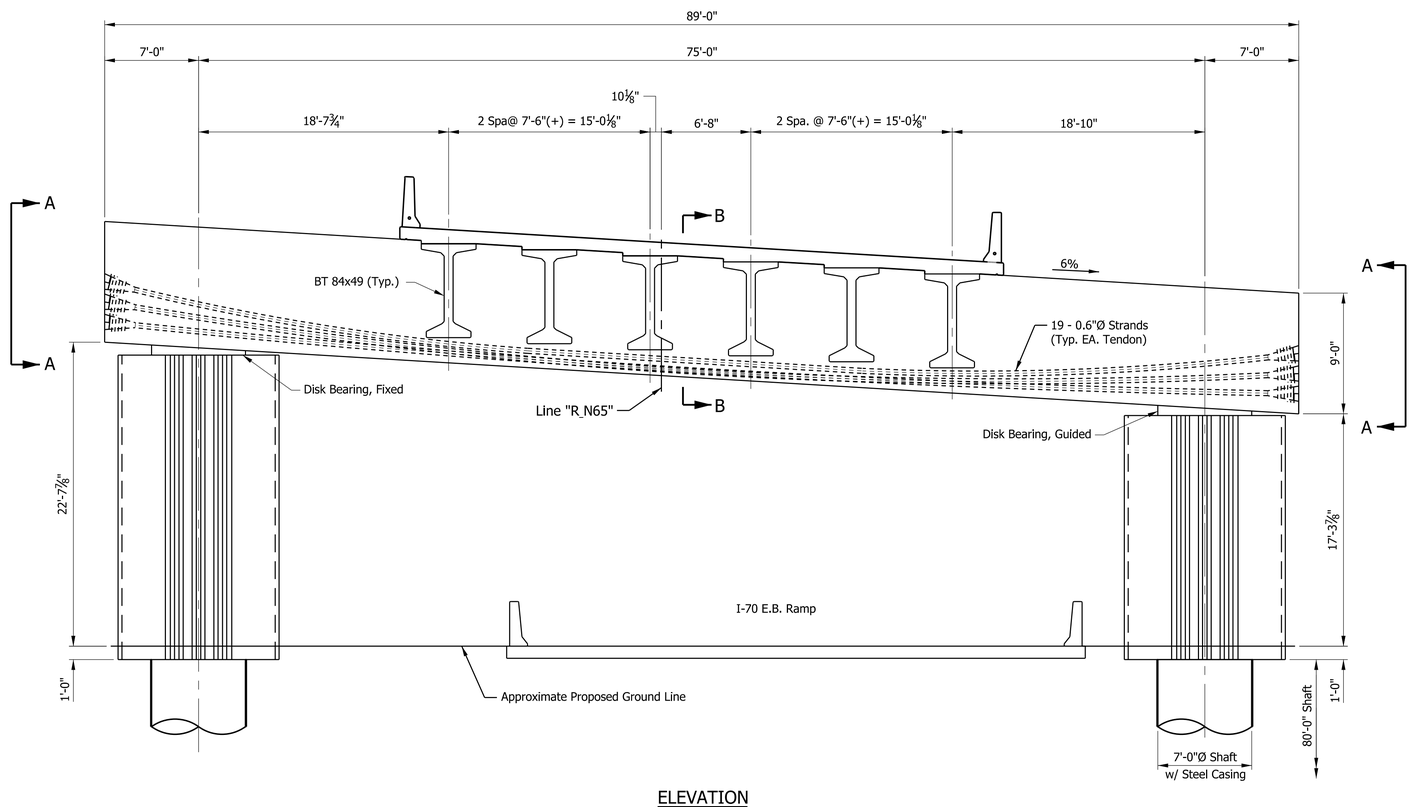

ELEVATION

Pile Foundation alternate not shown for clarity

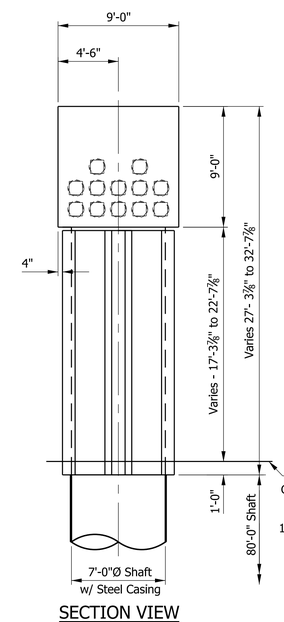

SECTION VIEW

Alternate Foundation Drilled Shaft

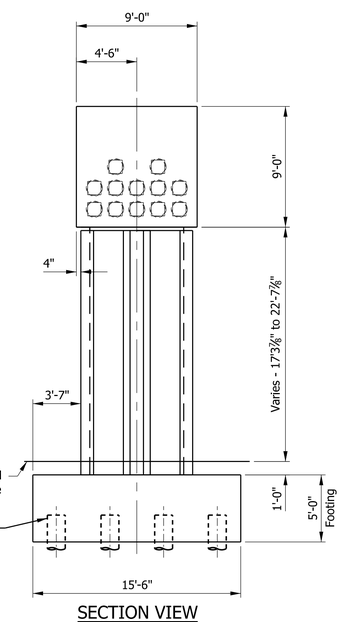

SECTION VIEW

Alternate Foundation Pile Footing

RECOMMENDED FOR APPROVAL ____ DESIGN ENGINEER DATE	INDIANA DEPARTMENT OF TRANSPORTATION	SCALE 3/16" = 1'-0"	BRIDGE FILE I65-111-10614 BNBL
			DESIGNATION 1901865
DESIGNED: SL / DRAWN: SRR	BENT NO. 2 DETAILS	SURVEY BOOK	SHEETS
		ELECTRONIC	10 of 16
CHECKED: CML / CHECKED: SL		CONTRACT B-36910	PROJECT 1600808

Plot: 2/25/2020 3:59:30 PM

P:\1297 - I-65 I-70 North Split\DWGS\BRIDGE\B 17 I65 NB over I70 EB Entrance Ramp\1901865_10 - Pier No. 2.dgn

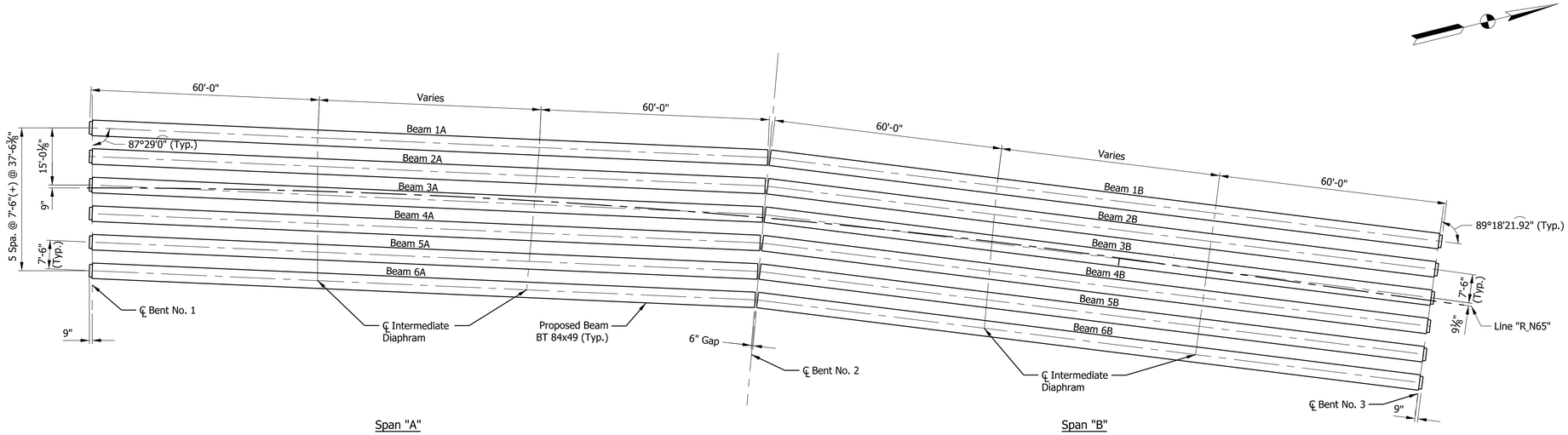

FRAMING PLAN

NOTES

For intermediate diaphragm details see Std. Dwg. E707-SDPC- 05 & 06.

RECOMMENDED FOR APPROVAL _____ DESIGN ENGINEER DATE	INDIANA DEPARTMENT OF TRANSPORTATION	SCALE 1/16" = 1'-0"	BRIDGE FILE I65-111-10614 BNBL
			DESIGNATION 1901865
DESIGNED: SL / DRAWN: SRR	FRAMING PLAN	SURVEY BOOK ELECTRONIC	SHEETS 11 of 16
CHECKED: CML / CHECKED: SL		CONTRACT B-36910	PROJECT 1600808

Plot: 2/25/2020 3:59:31 PM

P:\1297 - I-65 I-70 North Split\DWGS\BRIDGE\B 17 I65 NB over I70 EB Entrance Ramp\1901865_11 - Framing Plan.dgn

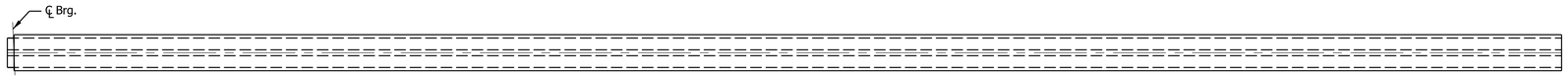

BEAM PLAN

Scale: ⅛" = 1'-0"

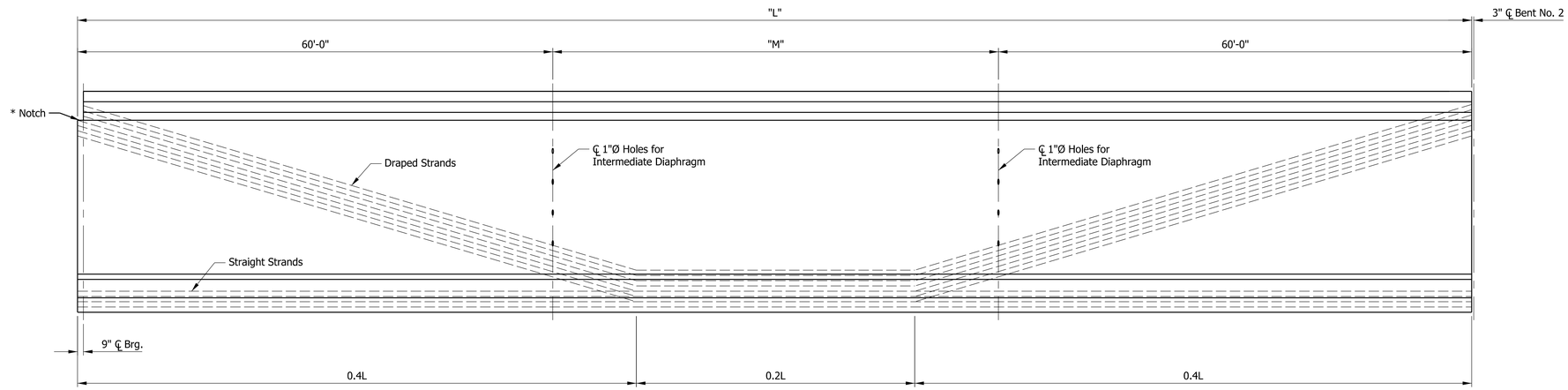

BEAM ELEVATION

Horizontal Scale: ⅛" = 1'-0"
Vertical Scale: ½" = 1'-0"

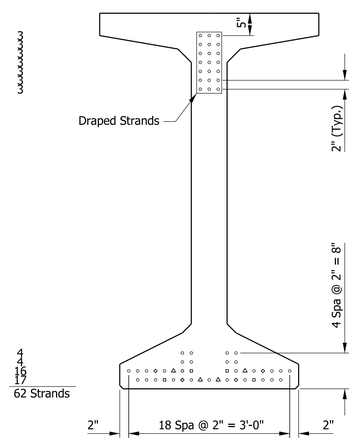

STRAND PATTERN AT BEAM END

Scale: ¾" = 1'-0"

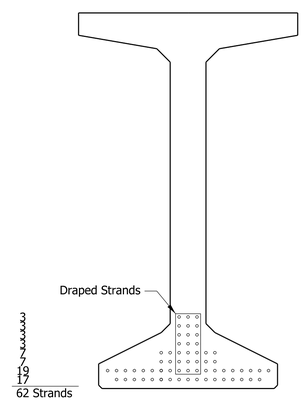

STRAND PATTERN AT MIDSPAN

Scale: ¾" = 1'-0"

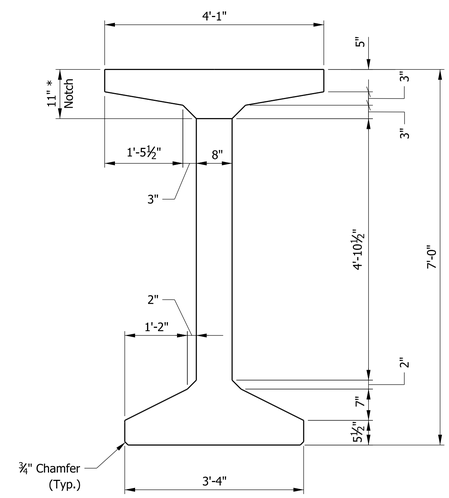

TYPICAL SECTION

Scale: ¾" = 1'-0"

Span "A"		
Beam Mark	"L"	"M"
1A	178'-3"	58'-3"
2A	177'-7"	57'-7"
3A	176'-11"	56'-11"
4A	176'-3"	56'-3"
5A	175'-7"	55'-7"
6A	174'-11"	54'-11"

Span "B"		
Beam Mark	"L"	"M"
1B	177'-7⅞"	57'-7⅞"
2B	177'-3⅝"	57'-3⅝"
3B	176'-11⅜"	56'-11⅜"
4B	176'-7⅛"	56'-7⅛"
5B	176'-2⅞"	56'-2⅞"
6B	175'-10⅝"	55'-10⅝"

LEGEND

- ∗ End Bent End Only
- △ Debonded 5' from beam end
- ▫ Debonded 10' from beam end
- ◇ Debonded 15' from beam end

NOTES

1. Prestressing reinforcement shall be a 0.6"Ø uncoated seven wire low relaxation 270ksi with strand area = 0.217 in².

2. Beams shall be cast minimum of 120 days before deck is poured

RECOMMENDED FOR APPROVAL
DESIGN ENGINEER DATE

DESIGNED: SL DRAWN: SRR
CHECKED: CML CHECKED: SL

INDIANA
DEPARTMENT OF TRANSPORTATION

BEAM DETAILS

SCALE	BRIDGE FILE
AS NOTED	I65-111-10614 BNBL
	DESIGNATION
	1901865
SURVEY BOOK	SHEETS
ELECTRONIC	12 of 16
CONTRACT	PROJECT
B-36910	1600808

Plot: 2/25/2020 3:59:33 PM

P:\1297 - I-65 I-70 North Split\DWGS\BRIDGE\B 17 I65 NB over I70 EB Entrance Ramp\1901865_12 - Beam Details.dgn

CURVE DATA
P.I. Sta. 103+46.42 "R_N65"
Delta = 19°47'22" Rt.
R = 1986.00'
T = 346.42'
L = 685.95'
E = 29.99'

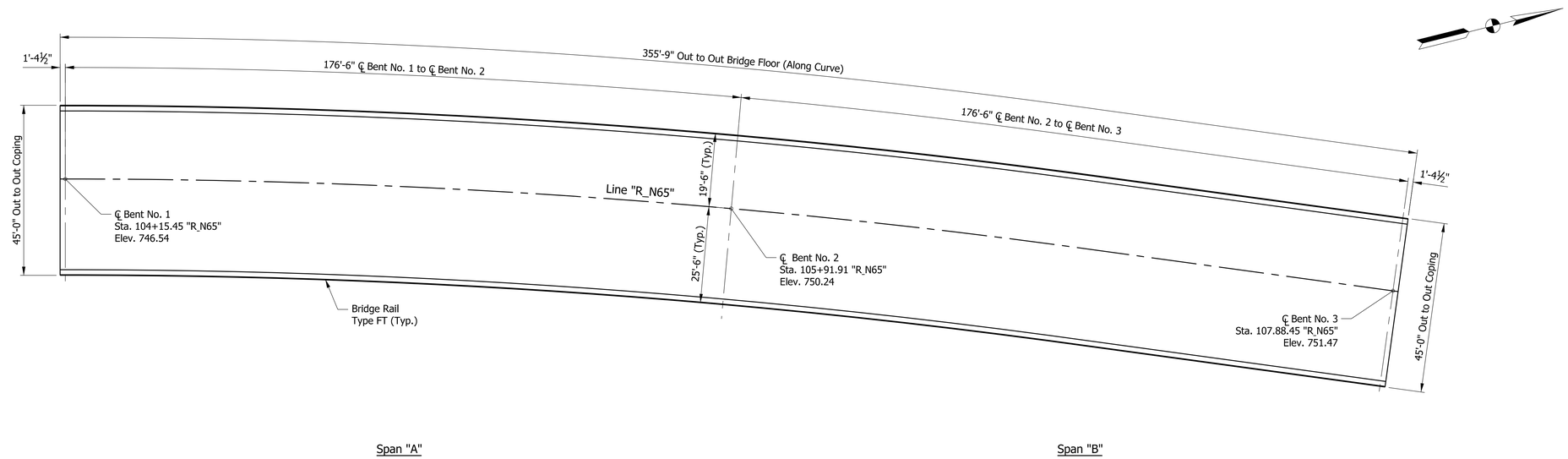

FLOOR PLAN

RECOMMENDED FOR APPROVAL ____ DESIGN ENGINEER DATE	INDIANA DEPARTMENT OF TRANSPORTATION	SCALE 1/16" = 1'-0"	BRIDGE FILE I65-111-10614 BNBL
			DESIGNATION 1901865
DESIGNED: SL DRAWN: SRR	SUPERSTRUCTURE DETAILS	SURVEY BOOK ELECTRONIC	SHEETS 13 of 16
CHECKED: CML CHECKED: SL		CONTRACT B-36910	PROJECT 1600808

Plot: 2/25/2020 3:59:34 PM

P:\1297 - I-65 I-70 North Split\DWGS\BRIDGE\B 17 I65 NB over I70 EB Entrance Ramp\1901865_13 - Deck Plan.dgn

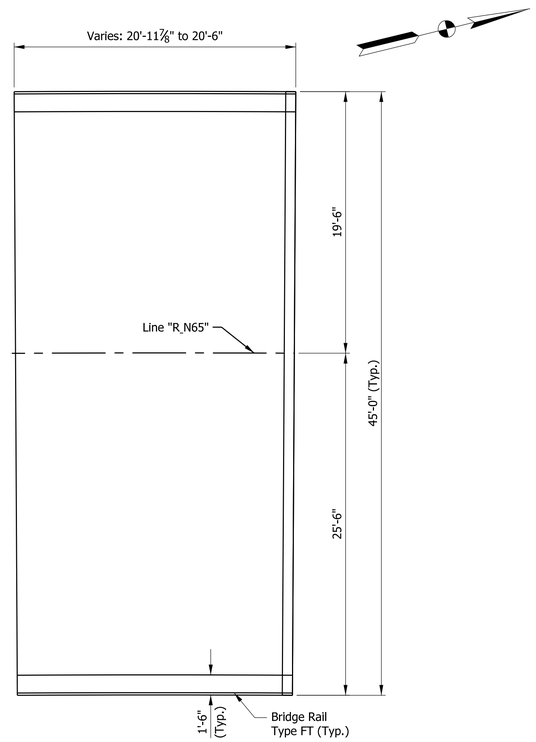

APPROACH SLAB AT BENT NO. 1

Scale: 3/16" = 1'-0"

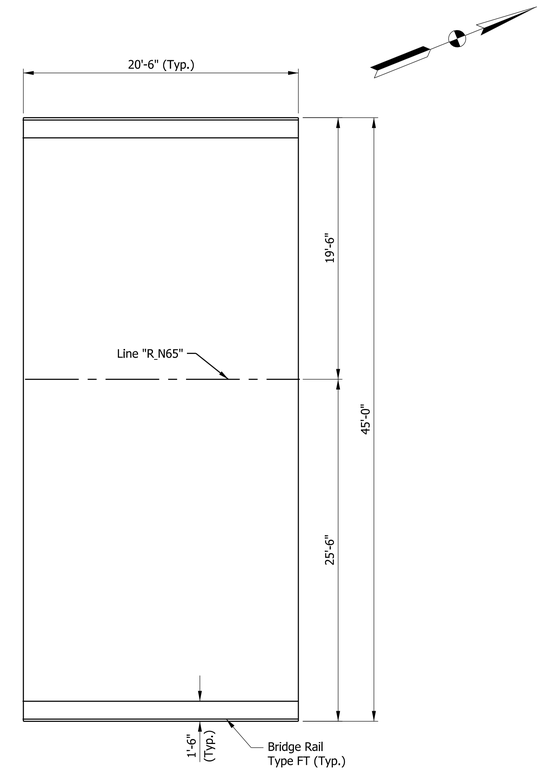

APPROACH SLAB AT BENT NO. 3

Scale: 3/16" = 1'-0"

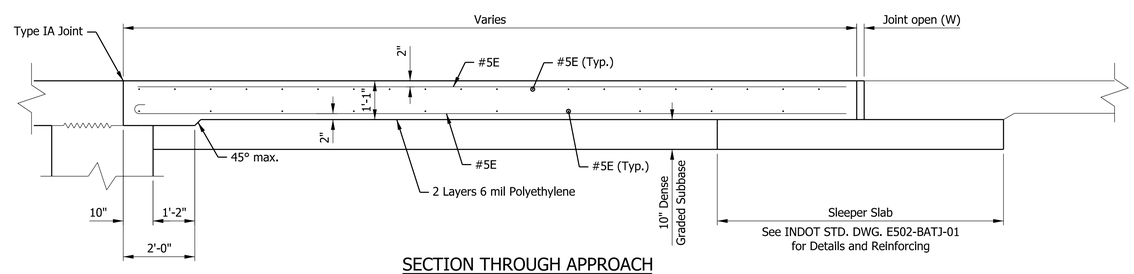

SECTION THROUGH APPROACH

Scale: ½" = 1'-0"

NOTE:

For additional Terminal Joint information, see USP. Terminal Joint Details: Type CRCP

RECOMMENDED FOR APPROVAL ____ DESIGN ENGINEER DATE	INDIANA DEPARTMENT OF TRANSPORTATION	SCALE: AS NOTED	BRIDGE FILE: I65-111-10614 BNBL
			DESIGNATION: 1901865
DESIGNED: SL / DRAWN: SRR	APPROACH SLAB DETAILS	SURVEY BOOK: ELECTRONIC	SHEETS: 14 of 16
CHECKED: CML / CHECKED: SL		CONTRACT: B-36910	PROJECT: 1600808

Plot: 2/25/2020 3:59:35 PM

P:\1297 - I-65 I-70 North Split\DWGS\BRIDGE\B 17 I65 NB over I70 EB Entrance Ramp\1901865_14 - Approach Slabs.dgn

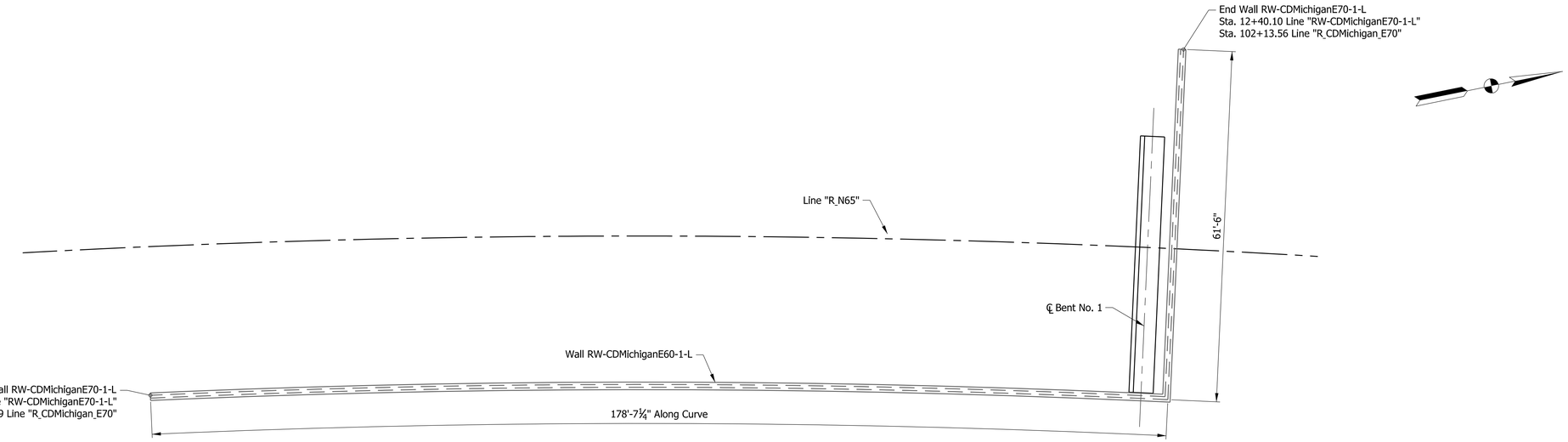

PLAN

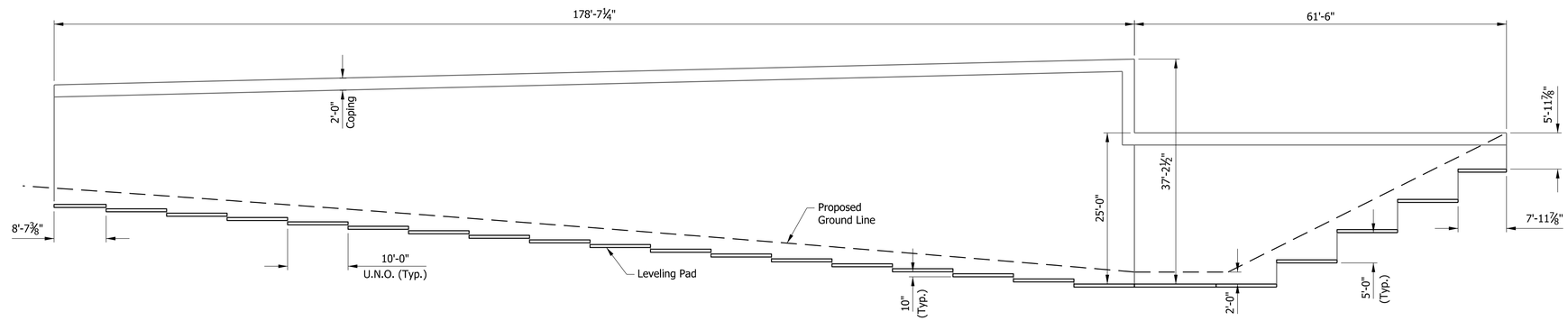

ELEVATION

RECOMMENDED FOR APPROVAL ____ DESIGN ENGINEER DATE	INDIANA DEPARTMENT OF TRANSPORTATION	SCALE 3/32" = 1'-0"	BRIDGE FILE I65-111-10614 BNBL
			DESIGNATION 1901865
DESIGNED: SL / DRAWN: SRR	MSE WALL DETAILS AT BENT NO. 1	SURVEY BOOK ELECTRONIC	SHEETS 15 of 16
CHECKED: CML / CHECKED: SL		CONTRACT B-36910	PROJECT 1600808

Plot: 2/25/2020 3:59:37 PM

P:\1297 - I-65 I-70 North Split\DWGS\BRIDGE\B 17 I65 NB over I70 EB Entrance Ramp\1901865_15 - MSE Wall 1.dgn

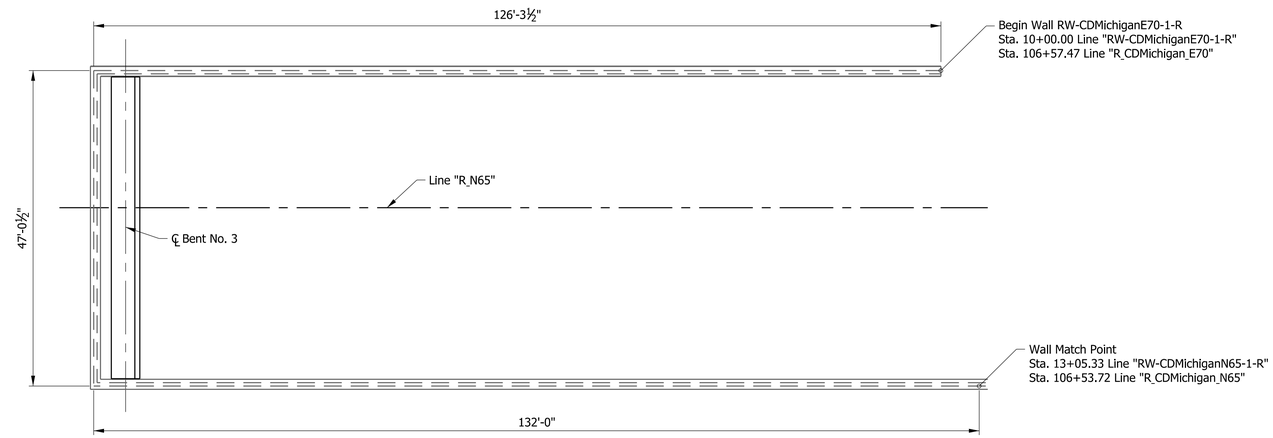

PLAN

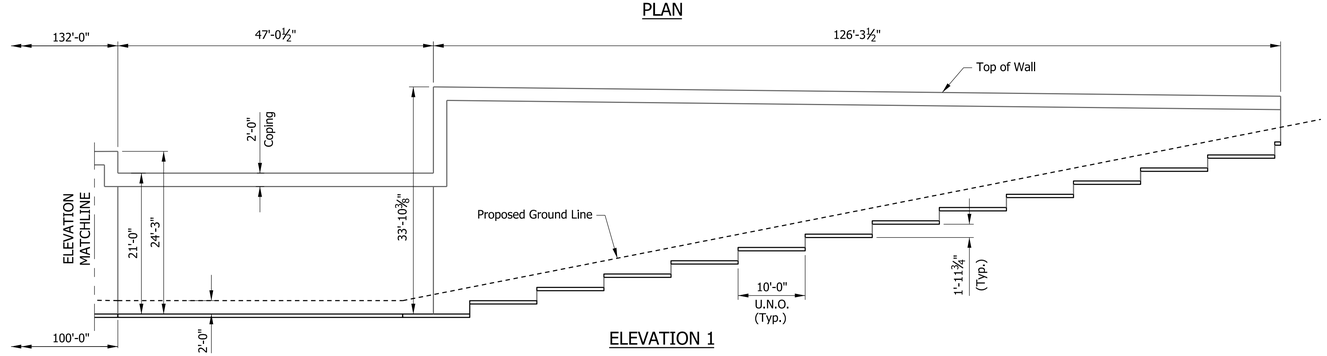

ELEVATION 1

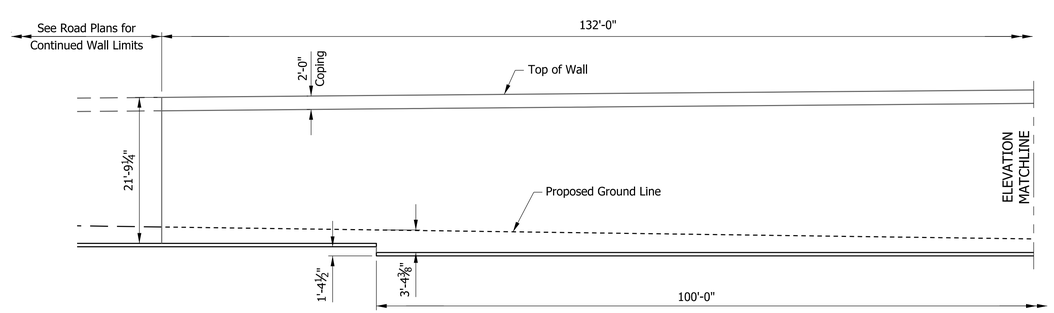

ELEVATION 2

RECOMMENDED FOR APPROVAL _____ DESIGN ENGINEER DATE	INDIANA DEPARTMENT OF TRANSPORTATION	SCALE 3/32" = 1'-0"	BRIDGE FILE I65-111-10614 BNBL
			DESIGNATION 1901865
DESIGNED: SL / DRAWN: SRR	MSE WALL DETAILS AT BENT NO. 3	SURVEY BOOK ELECTRONIC	SHEETS 16 of 16
CHECKED: CML / CHECKED: SL		CONTRACT B-36910	PROJECT 1600808

Plot: 2/25/2020 3:59:38 PM

P:\1297 - I-65 I-70 North Split\DWGS\BRIDGE\B 17 I65 NB over I70 EB Entrance Ramp\1901865_16 - MSE Wall 2.dgn

PROJECT	DESIGNATION
1600808	1901881
CONTRACT	BRIDGE FILE
B-36910	I65-111-10615 BNBL

STRUCTURE INFORMATION				
STRUCTURE	TYPE	SPAN & SKEW	OVER	STATION
I65-111-10615 BNBL	PRESTRESSED COMPOSITE CONCRETE BULB-TEE BEAM BRIDGE	1 SPAN: 83'-3 3/4" SKEW 12°45'28" LT.	ST. CLAIR STREET	116+44.63 LINE "R_N65"

INDIANA DEPARTMENT OF TRANSPORTATION

BRIDGE PLANS

FOR SPANS OVER 20 FEET

ROUTE: I-65 N.B. AT: RP 111+95

PROJECT NO. 1600808 P.E.

1600808 CONST.

NO ADDITIONAL RIGHT OF WAY REQUIRED FOR THIS PROJECT

BRIDGE REPLACEMENT ON I-65 N.B. OVER ST. CLAIR STREET
LOCATED 1.65 MILES NORTH OF I-70 (SOUTH SPLIT) INTERCHANGE
SECTION 1, TOWNSHIP 15 NORTH, RANGE 3 EAST
CENTER TOWNSHIP, MARION COUNTY INDIANA

TRAFFIC DATA	I-65 N.B.	MICHIGAN STREET ENTRANCE RAMP	ST. CLAIR STREET
A.D.T. (2021)	28,680 V.P.D.	5,800 V.P.D.	1,082 V.P.D.
A.D.T. (2041)	34,823 V.P.D.	6,267 V.P.D.	1,427 V.P.D.
D.H.V. (2041)	3,357 V.P.H.	752 V.P.H.	174 V.P.H.
DIRECTIONAL DISTRIBUTION	100 %	100 %	60 %
TRUCKS	3 % D.H.V.	2 % D.H.V.	4 % D.H.V.
DESIGN DATA			
DESIGN SPEED	50 M.P.H.	45 M.P.H.	25 M.P.H.
PROJECT DESIGN CRITERIA	4R (FREEWAY)		N/A
FUNCTIONAL CLASSIFICATION	URBAN FREEWAY		LOCAL ROAD
RURAL/URBAN	URBAN (BUILT-UP)		URBAN (BUILT-UP)
TERRAIN	LEVEL		LEVEL
ACCESS CONTROL	FULL CONTROL		NONE

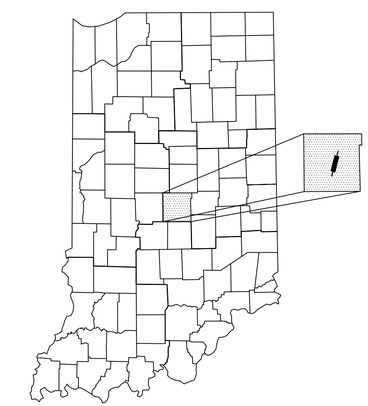

PROJECT LOCATION SHOWN BY

LATITUDE: 39°46'39" N LONGITUDE: 86°08'27" W

BRIDGE LENGTH :	0.016 MI.
ROADWAY LENGTH :	SEE ROAD PLANS
TOTAL LENGTH :	SEE ROAD PLANS
MAX GRADE :	2.07%

HUC: 05120201130020

END PROJECT No. 1600808
STATION 25+75.00 LINE "P_ALG_I65"

END PROJECT No. 1600808
STATION 41+85.70 LINE "P_ALG_I70"

R. 3 E. | R. 4 E.

T. 16 N.

T. 15 N.

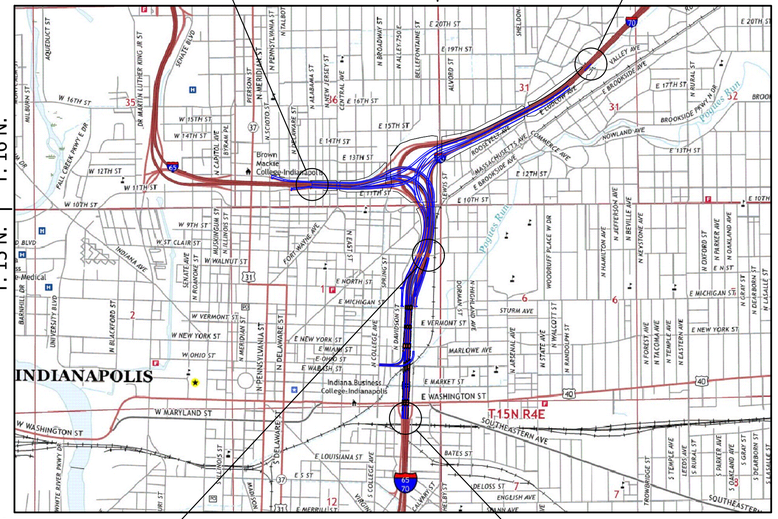

SCALE: 1" = 2000'

PROJECT LOCATION
BRIDGE FILE No. I65-111-10615 BNBL
I-65 N.B. OVER ST. CLAIR STREET
STA. 116+44.63 LINE "R_N65"

LOCATION MAP
MARION COUNTY

BEGIN PROJECT No. 1600808
STATION 113+00.00 LINE "P_ALG_I65/I70"

INDIANA DEPARTMENT OF TRANSPORTATION
STANDARD SPECIFICATIONS DATED 2020 TO
BE USED WITH THESE PLANS.

SUPERIOR CONSTRUCTION

PLANS PREPARED BY: Butler Fairman and Seufert Inc. (317)713-4615 PHONE

CERTIFIED BY: . DATE

APPROVED FOR LETTING: . INDIANA DEPARTMENT OF TRANSPORTATION DATE

BRIDGE FILE	
I65-111-10615 BNBL	
DESIGNATION	
1901881	
SURVEY BOOK	SHEET
ELECTRONIC	1 OF 15
CONTRACT	PROJECT
B-36910	1600808

6412

\\bfsn1241\Jobs5\641200.0000\ProjDevelopment\Design\Drawings\BRIDGES\07_OVER_ST_CLAIR_STREET\Structure_1901881\1901881_S_BR_TTL01.dwg Dylan Piercefield Plot:2/24/2020 6:30 AM Save:2/21/2020 10:33 AM

UTILITIES

REVISIONS

SHEET NO.	DATE	REVISED

KIN PROJECT INFORMATION

DESIGNATION	PROJECT DESCRIPTION	
1600808	COMPLETE ROAD RECONSTRUCTION OF I-65/I-70 FROM WASHINGTON STREET TO I-65 OVER DELAWARE STREET AND I-70 OVER VALLEY AVENUE	LEAD DES
1901935	ITS FOR I-65/I-70 FROM WASHINGTON STREET TO I-65 OVER DELAWARE STREET AND I-70 OVER VALLEY AVENUE	
1901936	SIGNS, LIGHTING, SIGNALS AND MARKING FOR I-65/I-70 FROM WASHINGTON STREET TO I-65 OVER DELAWARE STREET AND I-70 OVER VALLEY AVENUE	
1901847	BRIDGE REPLACEMENT ON I-65/I-70 NB OVER WASHINGTON STREET	
1901848	BRIDGE REPLACEMENT ON I-65/I-70 SB OVER WASHINGTON STREET	
1901849	BRIDGE REPLACEMENT ON I-65/I-70 SB CD OVER WASHINGTON STREET	
1901850	BRIDGE REPLACEMENT ON I-65/I-70 NB OVER MARKET STREET	
1901851	BRIDGE REPLACEMENT ON I-65/I-70 SB OVER MARKET STREET	
1901852	BRIDGE REPLACEMENT ON I-65/I-70 SB CD OVER MARKET STREET	
1901853	BRIDGE REPLACEMENT ON I-65/I-70 NB OVER CSX RAILROAD & OHIO STREET	
1901854	BRIDGE REPLACEMENT ON I-65/I-70 SB OVER CSX RAILROAD & OHIO STREET	
1901855	BRIDGE REPLACEMENT ON I-65/I-70 SB CD OVER CSX RAILROAD & OHIO STREET	
1901856	BRIDGE REPLACEMENT ON I-65/I-70 NB OVER NEW YORK STREET	
1901857	BRIDGE REPLACEMENT ON I-65/I-70 SB OVER NEW YORK STREET	
1901858	BRIDGE REPLACEMENT ON I-65/I-70 SB CD OVER NEW YORK STREET	
1901861	BRIDGE REPLACEMENT ON I-65/I-70 SB CD OVER VERMONT STREET	
1901862	BRIDGE REPLACEMENT ON I-65 NB & I-70 EB OVER MICHIGAN STREET	
1901863	BRIDGE REPLACEMENT ON I-65 SB/I-70 WB OVER MICHIGAN STREET	
1901864	BRIDGE REPLACEMENT ON I-65/I-70 SB CD OVER MICHIGAN STREET	
1901865	BRIDGE REPLACEMENT ON I-65 NB OVER I-70 EB ENTRANCE RAMP	
1901881	BRIDGE REPLACEMENT ON I-65 NB OVER ST. CLAIR STREET	
1901889	NEW BRIDGE CONSTRUCTION ON I-70 EB OVER ST. CLAIR STREET	
1901892	BRIDGE REPLACEMENT ON I-65 SB/I-70 WB OVER ST. CLAIR STREET	
1901896	NEW BRIDGE CONSTRUCTION ON SB CD OVER ST. CLAIR STREET	
1901897	BRIDGE REPLACEMENT ON I-65 NB OVER EAST 10TH STREET	
1901899	NEW BRIDGE CONSTRUCTION ON I-70 EB OVER EAST 10TH STREET	
1901901	BRIDGE REPLACEMENT ON I-65 SB OVER EAST 10TH STREET	
1901903	BRIDGE REPLACEMENT ON I-70 WB OVER EAST 10TH STREET	
1901905	NEW BRIDGE CONSTRUCTION ON SB CD & RAMP OVER EAST 10TH STREET	
1901906	NEW BRIDGE CONSTRUCTION ON I-65 NB CD EXIT RAMP OVER CENTRAL AVENUE	
1901907	BRIDGE REPLACEMENT ON I-65 NB OVER CENTRAL AVENUE	
1901908	BRIDGE REPLACEMENT ON I-65 SB OVER CENTRAL AVENUE	
1901909	NEW BRIDGE CONSTRUCTION ON I-65 SB CD ENTRANCE RAMP OVER CENTRAL AVE.	
1901914	BRIDGE REPLACEMENT ON I-70 WB TO I-65 NB OVER COLLEGE AVENUE	
1901915	BRIDGE REPLACEMENT ON I-65 NB & PENNSYLVANIA EXIT RAMP OVER COLLEGE AVENUE	
1901917	BRIDGE REPLACEMENT ON I-65 SB & SB CD RAMP OVER COLLEGE AVENUE	
1901918	BRIDGE REPLACEMENT ON I-65 SB & DELAWARE ENTRANCE RAMP TO I-70 EB OVER COLLEGE AVENUE & FIVE RAMPS	
1901919	BRIDGE REPLACEMENT ON I-65 NB OVER I-70 WB & RAMP	
1901920	BRIDGE REPLACEMENT ON I-70 WB TO I-65 NB OVER THREE RAMPS	
1901921	BRIDGE REPLACEMENT ON I-65 SB OVER I-70 WB & SB CD RAMP	
1901922	NEW BRIDGE CONSTRUCTION ON I-70 EB OVER I-65 NB	
1901923	BRIDGE REPLACEMENT ON I-70 WB & SB CD OVER LEWIS STREET & MONON TRAIL	
1901925	NEW BRIDGE CONSTRUCTION ON I-70 WB TO I-65 NB OVER LEWIS STREET & MONON TRAIL	
1901927	NOT USED	
1901928	BRIDGE REPLACEMENT ON I-70 EB OVER LEWIS STREET & MONON TRAIL	
1901929	PREVENTATIVE MAINTENANCE ON I-70 WB OVER ROOSEVELT AT COMMERCE AVENUE	
1901930	PREVENTATIVE MAINTENANCE ON I-70 EB OVER ROOSEVELT AT COMMERCE AVENUE	
1901931	PREVENTATIVE MAINTENANCE ON I-70 WB OVER VALLEY AVENUE	
1901932	PREVENTATIVE MAINTENANCE ON I-70 EB OVER VALLEY AVENUE	
1901933	REHABILITATE AND WIDEN ON I-65 OVER 7 STREETS, ACCESS RD, MONORAIL (AKA "MONSTER BRIDGE") - PENNSYLVANIA EXIT RAMP	
1901934	REHABILITATE AND WIDEN ON I-65 OVER 7 STREETS, ACCESS RD, MONORAIL (AKA "MONSTER BRIDGE") - DELAWARE ENTRANCE RAMP	
1902179	BRIDGE REPLACEMENT ON I-65 NB/I70 EB OVER VERMONT STREET	
1902180	BRIDGE REPLACEMENT ON I-65 SB/I70 WB OVER VERMONT STREET	

INDEX

SHEET NO.	DESIGNATION
1	TITLE
2	INDEX
3	MAINTENANCE OF TRAFFIC
4	LAYOUT
5	GENERAL PLAN - PLAN & ELEVATION VIEWS
6	GENERAL PLAN - TYPICAL SECTION
7	BENT NO. 1 DETAILS
8	BENT NO. 2 DETAILS
9	BENTS NO. 1 AND NO. 2 DETAILS
10	FRAMING PLAN
11	BEAM DETAILS
12	FLOOR DETAILS
13	APPROACH SLAB
14	WALL LAYOUT
15	WALL LAYOUT

RECOMMENDED FOR APPROVAL: _____ DESIGN ENGINEER _____ DATE

DESIGNED: B. WRIGHT DRAWN: L. KIRSCH

CHECKED: M. EICHENAUER CHECKED: B. WRIGHT

INDIANA
DEPARTMENT OF TRANSPORTATION

INDEX

HORIZONTAL SCALE	BRIDGE FILE
N/A	I65-111-10615 BNBL
VERTICAL SCALE	DESIGNATION
N/A	1901881
SURVEY BOOK	SHEET
ELECTRONIC	2 OF 15
CONTRACT	PROJECT
B-36910	1600808

BPS NO. 6412

\\bfsn1241\Jobs5\641200.0000\Proj\Development\Design\Drawings\BRIDGES\07 OVER ST CLAIR STREET\Structure 1901881\1901881_S_BR_IN001.dwg Dylan Piercefield Plot:2/24/2020 6:30 AM Save:2/17/2020 8:47 AM

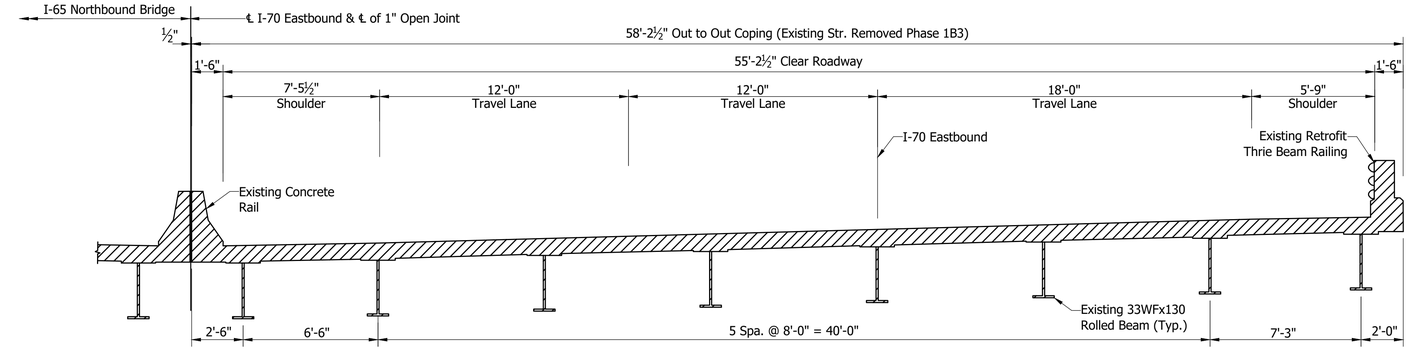

EXISTING I-70 EASTBOUND TYPICAL SECTION

NOT TOSCALE

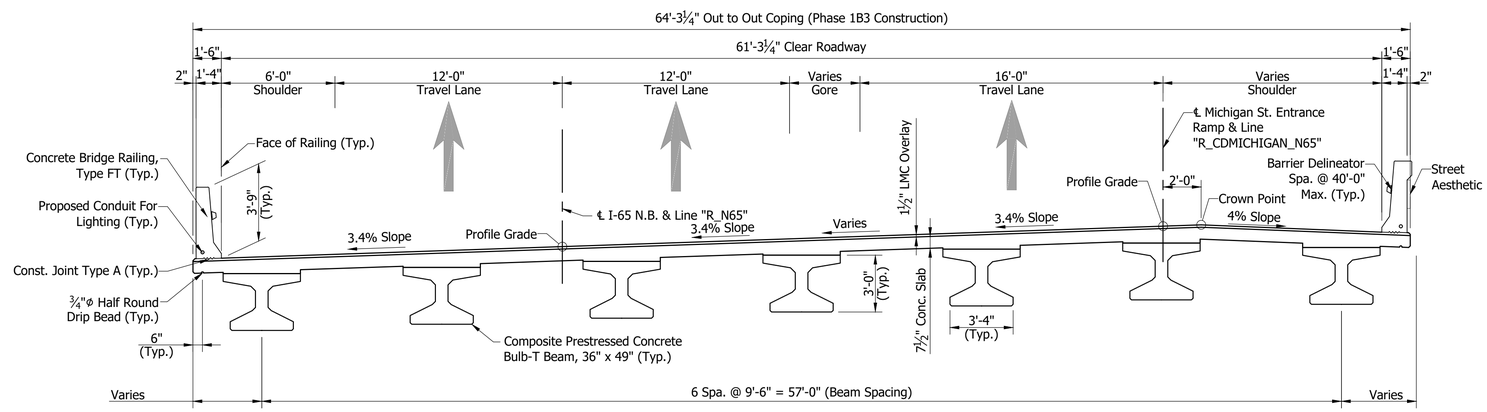

TYPICAL SECTION - WIDE SIDE (SOUTH)

Scale: 1/4"= 1'-0"

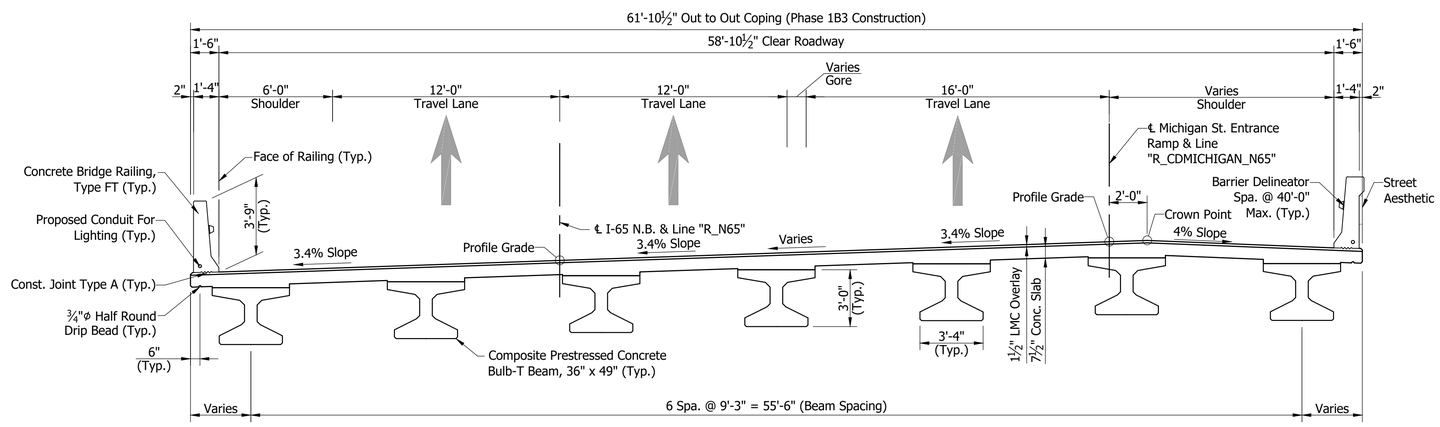

TYPICAL SECTION - NARROW SIDE (NORTH)

Scale: 1/4"= 1'-0"

RECOMMENDED FOR APPROVAL: _____ DESIGN ENGINEER _____ DATE

DESIGNED: B. WRIGHT DRAWN: K. COFFMAN

CHECKED: M. EICHENAUER CHECKED: B. WRIGHT

INDIANA DEPARTMENT OF TRANSPORTATION

MAINTENANCE OF TRAFFIC

HORIZONTAL SCALE	BRIDGE FILE
As Noted	I65-111-10615 BNBL
VERTICAL SCALE	DESIGNATION
N/A	1901881
SURVEY BOOK	SHEET
ELECTRONIC	3 OF 15
CONTRACT	PROJECT
B-36910	1600808

6412

BFS NO.

\\bfsn1241\jobs5\641200.0000\Proj\Development\Design\Drawings\BRIDGES\07 OVER ST CLAIR STREET\Structure 1901881\1901881_S_BR_MOT01 - MOT.dwg Dylan Piercefield Plot:2/24/2020 6:31 AM Save:2/6/2020 4:23 PM

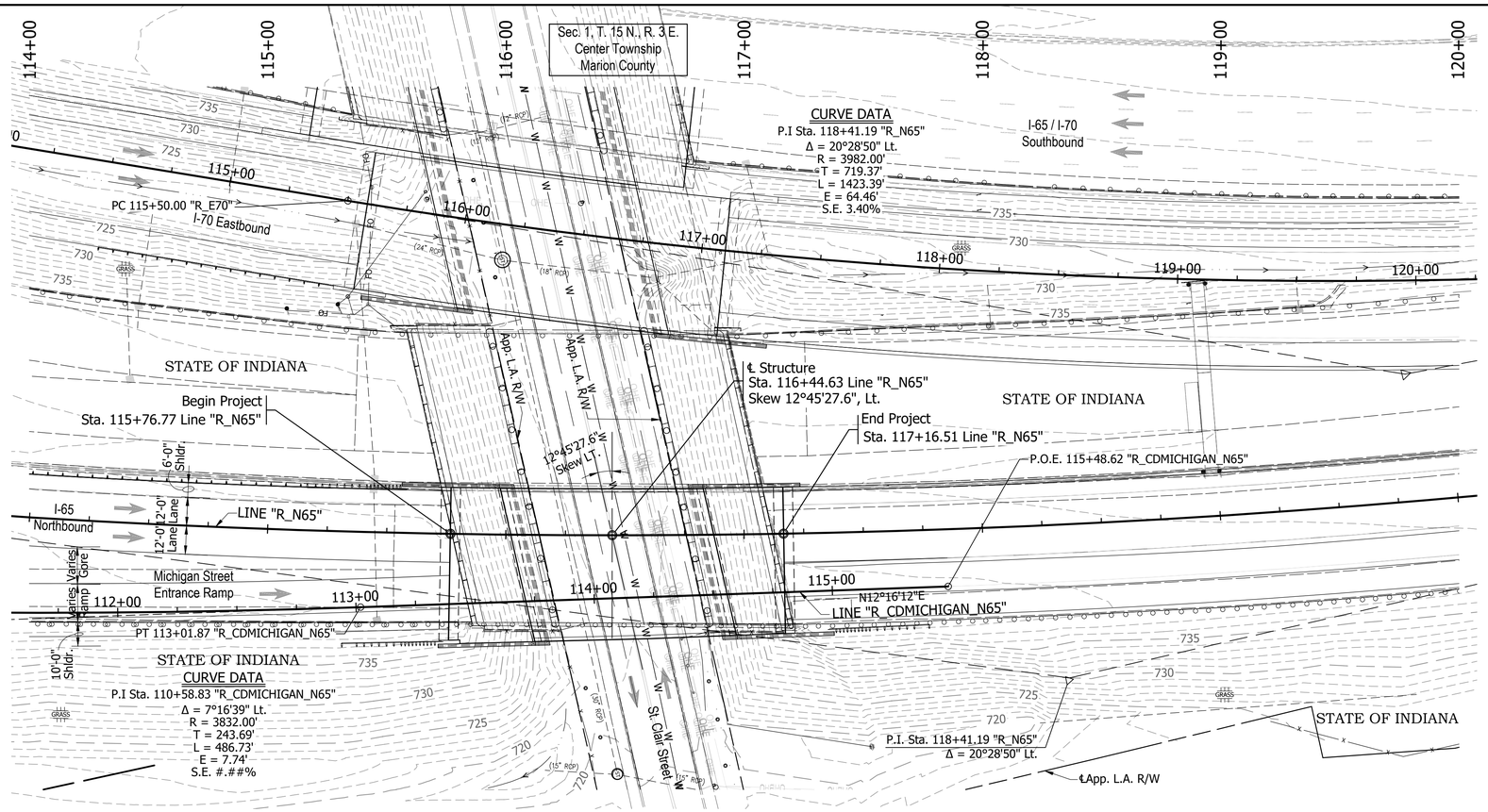

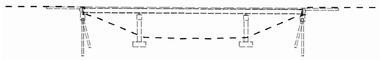

EXISTING STRUCTURE

The existing structure was built in 1974. Structure was rehabilitated in 2000 & 2003. The structure is a 3-span continuous composite 33" WF steel beam.

Span lengths: 1 @ 34'-0", 1 @ 65'-0", 1 @ 34'-0"

Clear roadway 55'-2½". Total length of 136'-10 1/8"

Existing structure to be removed.

Existing plans are on file with the Indiana Department of Transportation under Bridge File No. I-65-112-5735 & I-65-112-5735A.

EARTHWORK TABULATION

See Roadway Plans (DES #_____) for earthwork tabulation.

NOTE: ALL TOPOGRAPHY INFORMATION REFERENCED TO LINE "_____" UNLESS NOTED.

ALL R/W ON THIS SHEET DESCRIBED FROM LINE "_____" UNLESS OTHERWISE NOTED

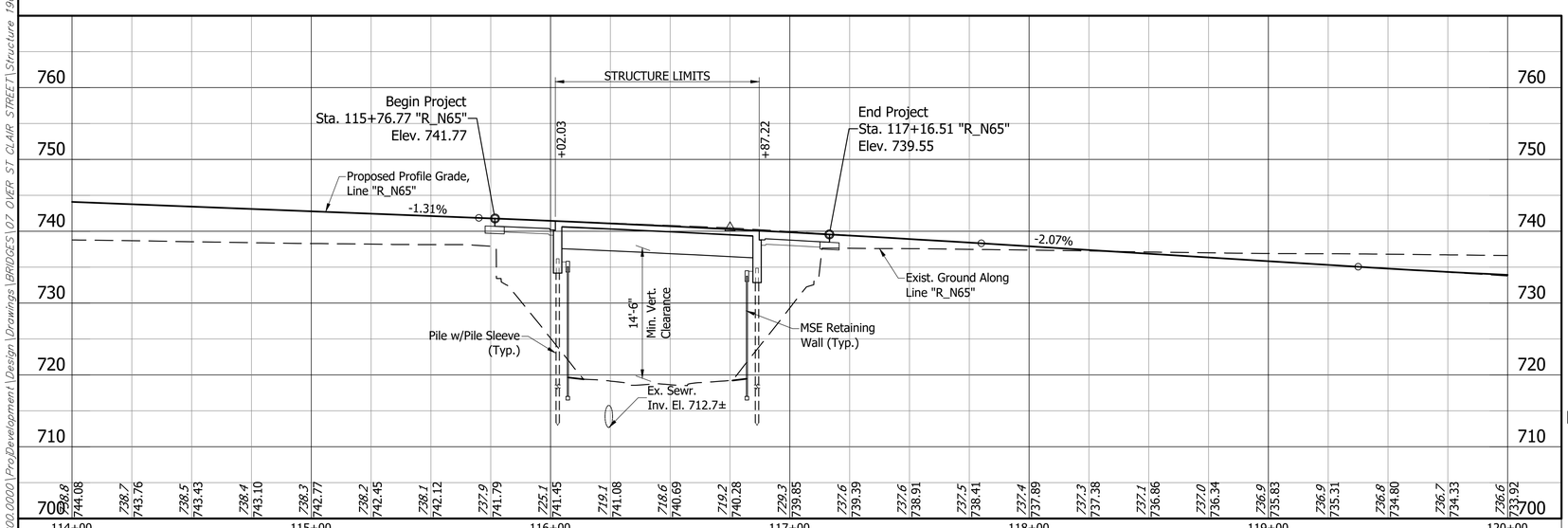

Notes:

1. For R/W and property information, see Location Control Route Survey (DES # _____).
2. For alignment data, see Geometric Layout Sheets (DES #_____).
3. See Road Plans (DES #_____) for Horizontal & Vertical Control Data.

PRESTRESSED COMPOSITE CONCRETE BULB-TEE BEAM BRIDGE
1 SPAN: 83'-3 3/4"
VARIES: 58'-10 1/2" TO 61'-3 1/4" CLEAR ROADWAY
SKEW 12°45'28" LT.
I-65 N.B. OVER ST. CLAIR STREET
MARION COUNTY

RECOMMENDED FOR APPROVAL: _____ DESIGN ENGINEER _____ DATE

DESIGNED: B. WRIGHT | DRAWN: L. KIRSCH
CHECKED: M. EICHENAUER | CHECKED: B. WRIGHT

INDIANA
DEPARTMENT OF TRANSPORTATION

LAYOUT

HORIZONTAL SCALE	BRIDGE FILE
1" = 30'	I65-111-10615 BNBL
VERTICAL SCALE	DESIGNATION
1" = 10'	1901881
SURVEY BOOK	SHEET
ELECTRONIC	4 OF 15
CONTRACT	PROJECT
B-36910	1600808

6412

BFS NO.

\\bfsrt241\vbs5\641200.0000\Pro\Development\Design\Drawings\BRIDGES\07_OVER_ST_CLAIR_STREET\Structure_1901881\1901881_S_BR_LA101.dwg Dylon Piercefield Plot: 2/24/2020 8:52 AM Save: 2/24/2020 8:39 AM

STRUCTURE TO BE BUILT ON A 210' VERTICAL CURVE

PVI Sta. 116+75
PVI El. 740.48
210 V.C.
-1.31% -2.07%

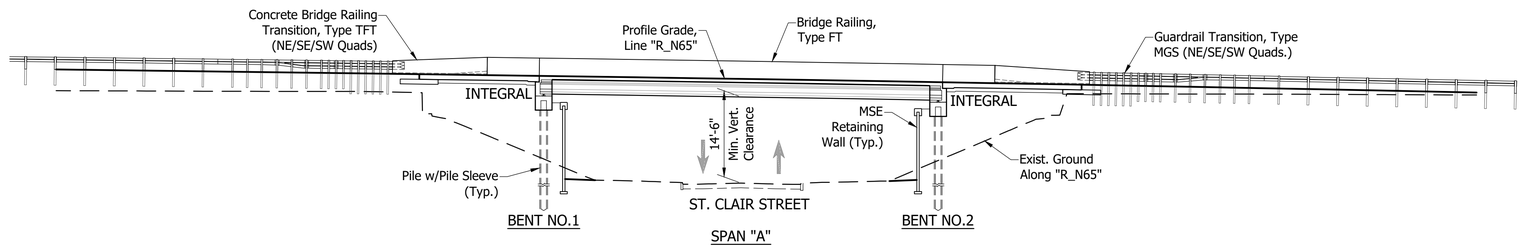

ELEVATION

Scale: 1/16" = 1'-0"

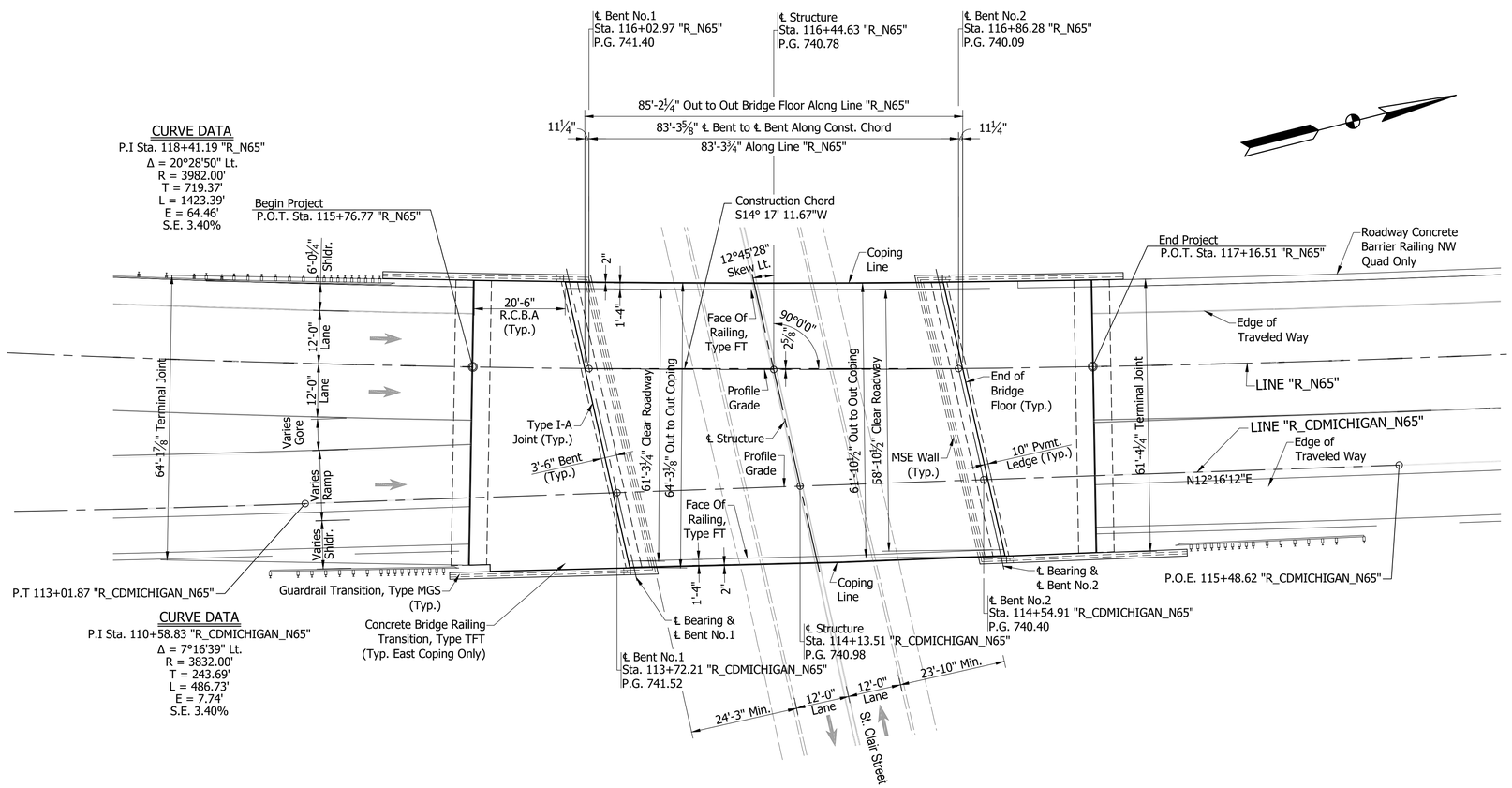

PLAN

Scale: 1/16" = 1'-0"

NOTE:
See Sheet 6 For Typical Section

PRESTRESSED COMPOSITE CONCRETE BULB-TEE BEAM BRIDGE
1 SPAN: 83'-3 3/4"
VARIES: 58'-10 1/2" TO 61'-3 1/4" CLEAR ROADWAY; SKEW 12°45'28" LT.
I-65 N.B. OVER ST. CLAIR STREET
MARION COUNTY

RECOMMENDED FOR APPROVAL: _____ DESIGN ENGINEER _____ DATE

DESIGNED: B. WRIGHT DRAWN: L. KIRSCH
CHECKED: M. EICHENAUER CHECKED: B. WRIGHT

INDIANA
DEPARTMENT OF TRANSPORTATION

GENERAL PLAN - PLAN & ELEVATION VIEWS

HORIZONTAL SCALE	BRIDGE FILE
As Noted	I65-111-10615 BNBL
VERTICAL SCALE	DESIGNATION
N/A	1901881
SURVEY BOOK	SHEET
ELECTRONIC	5 OF 15
CONTRACT	PROJECT
B-36910	1600808

BFS NO. 6412

\\bfsnt241\Jobs5\641200.0000\ProjDevelopment\Design\Drawings\BRIDGES\07 OVER ST CLAIR STREET\Structure 1901881\1901881_S_BR_PLN01.dwg Dylan Piercefield Plot: 2/24/2020 8:52 AM Save: 2/24/2020 8:51 AM

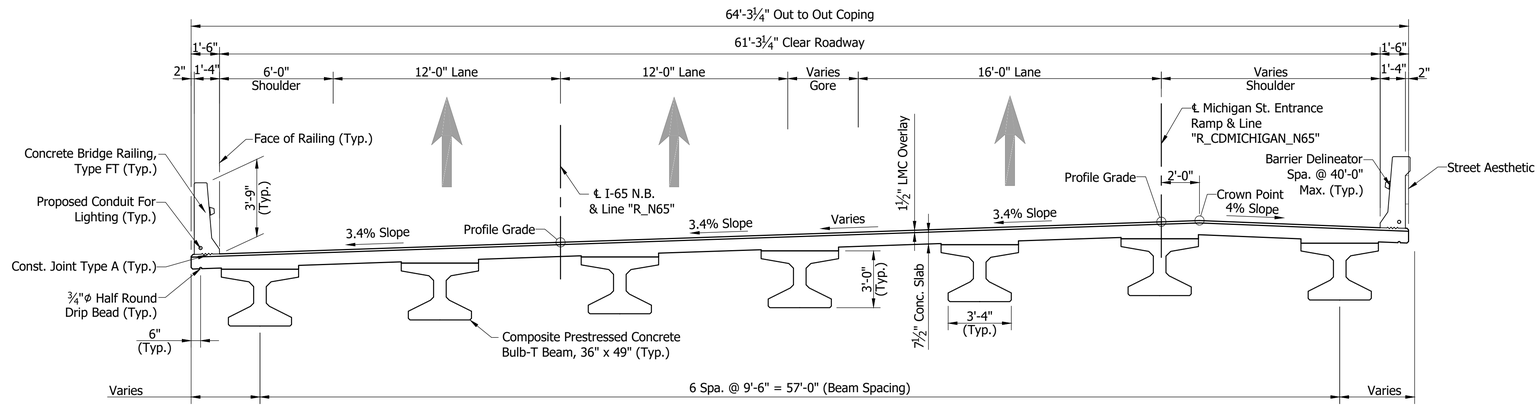

TYPICAL SECTION - WIDE SIDE (SOUTH)

Scale: 1/4"= 1'-0"

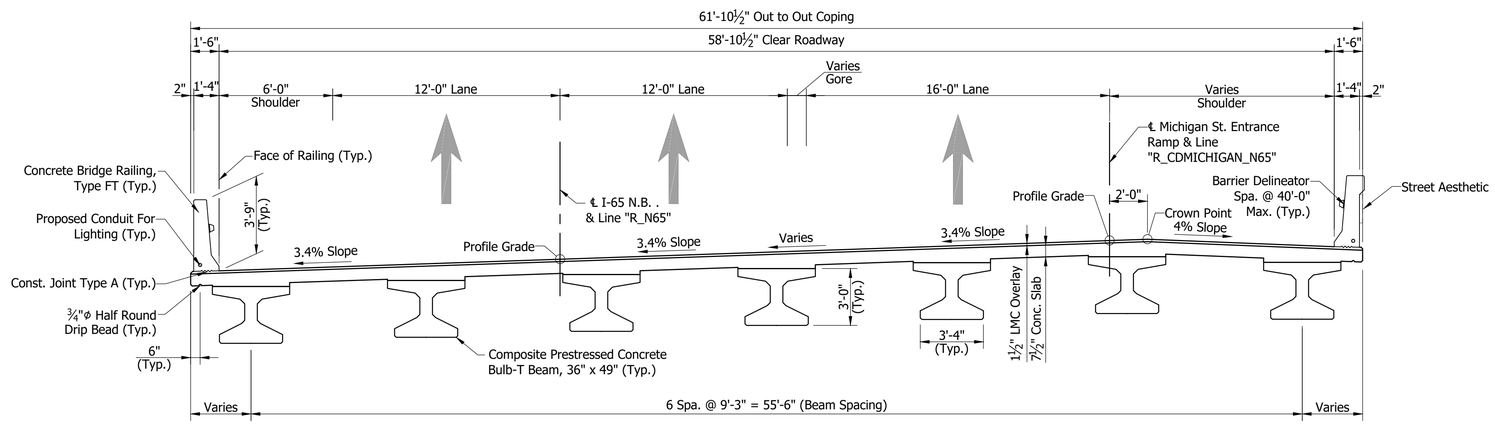

TYPICAL SECTION - NARROW SIDE (NORTH)

Scale: 1/4"= 1'-0"

GENERAL NOTES

Reinforcing bars covering shall be 3 ½" in top and 1" min. in bottom of floor slabs and 3" in footings except bottom steel which shall be 4", and 2" in all other parts, unless noted.

Concrete in floor slab, and diaphragms, barriers, and end bents shall be an alternate Class C in accordance with the Technical Provisions.

Reinforcing Bars in Deck, Barrier, and End Bent Diaphragm Extending into the Deck shall be Stainless Steel. Reinforcing Bars in End Bent Diaphragm not Extending into the Deck and in the Cap shall be Epoxy Coated.

All exposed faces of the MSE walls and reinforced concrete bridge approach slabs shall receive surface seal.

See Bridge Aesthetic Plan for Architectural Details.

DESIGN DATA

LIVE LOAD:

Superstructure and Substructure Designed for HL-93 loading in accordance with the AASHTO LRFD Bridge Design Specifications, 8th Edition, 2017 and its subsequent revisions.

DEAD LOAD:

Designed for Actual Dead Load plus 35 psf of future wearing surface, and 15 psf for SIP Metal Deck Forms.

FLOOR SLAB:

Slab designed with a 7 ½" structural depth and a 1 ½" very early strength LMC wearing surface.

CONSTRUCTION LOADING:

The exterior girder has been checked for strength, deflection, and overturning using the construction loads shown below. Cantilever overhang brackets were assumed for support of the deck overhang past the edge of the exterior beam. The finishing machine was assumed to be supported 6 in. outside the vertical coping form. The top overhang brackets were assumed to be located 6 in. past the edge of the vertical coping form. The bottom overhang brackets were assumed to be braced against the intersection of the girder bottom flange and web.

DECK FALSEWORK LOADS:

Designed for 15 psf for permanent metal stay-in-place deck forms, removable deck forms, and 2 ft. exterior walkway.

DESIGN STRESSES

CONSTRUCTION LIVE LOAD:

Designed for 20 psf extending 2 ft. past the edge of coping and 75 lb/ft vertical force applied at a distance of 6 in. outside the face of coping over a 30 foot length of the deck centered with the finishing machine.

FINISHING-MACHINE LOAD:

4500 lb distributed over 10 ft. along the coping.

WIND LOAD:

Designed for 70 mph horizontal wind load in accordance with LRFD 3.8.1.

ULTIMATE DESIGN STRENGTHS:

Class "A" Concrete	f'c = 3,500 p.s.i.
Class "B" Concrete	f'c = 3,000 p.s.i.
Class "C" Concrete	f'c = 4,000 p.s.i.
Reinforcing Steel (Grade 60)	Fy = 60,000 p.s.i. (barrier)
	Fy = 75,000 p.s.i. (deck)
	Fy = 75,000 p.s.i. (all other locations)

SEISMIC DESIGN DATA:

Seismic Site Class	C
PGA (g)	0.051
S_s (g)	0.12
S_1 (g)	0.051
S_{D1} (g)	0.086
Seismic Design Category	A

PRESTRESSED COMPOSITE CONCRETE BULB-TEE BEAM BRIDGE
1 SPAN: 83'-3 3/4"
VARIES: 58'-10 1/2" TO 61'-3 1/4"" CLEAR ROADWAY; SKEW 12°45'28" LT.
I-65 N.B. OVER ST. CLAIR STREET
MARION COUNTY

RECOMMENDED FOR APPROVAL: _____ DESIGN ENGINEER _____ DATE

DESIGNED: B. WRIGHT DRAWN: L. KIRSCH
CHECKED: M. EICHENAUER CHECKED: B. WRIGHT

INDIANA
DEPARTMENT OF TRANSPORTATION

GENERAL PLAN - TYPICAL SECTION

HORIZONTAL SCALE	BRIDGE FILE
As Noted	I65-111-10615 BNBL
VERTICAL SCALE	DESIGNATION
N/A	1901881
SURVEY BOOK	SHEET
ELECTRONIC	6 OF 15
CONTRACT	PROJECT
B-36910	1600808

BFS NO. 6412

\\bfsnt241\Jobs5\641200.0000\ProDevelopment\Design\Drawings\BRIDGES\07 OVER ST CLAIR STREET\Structure 1901881\1901881_S_BR_PLN02.dwg Dylan Piercefield Plot: 2/24/2020 6:31 AM Save: 2/20/2020 4:13 PM

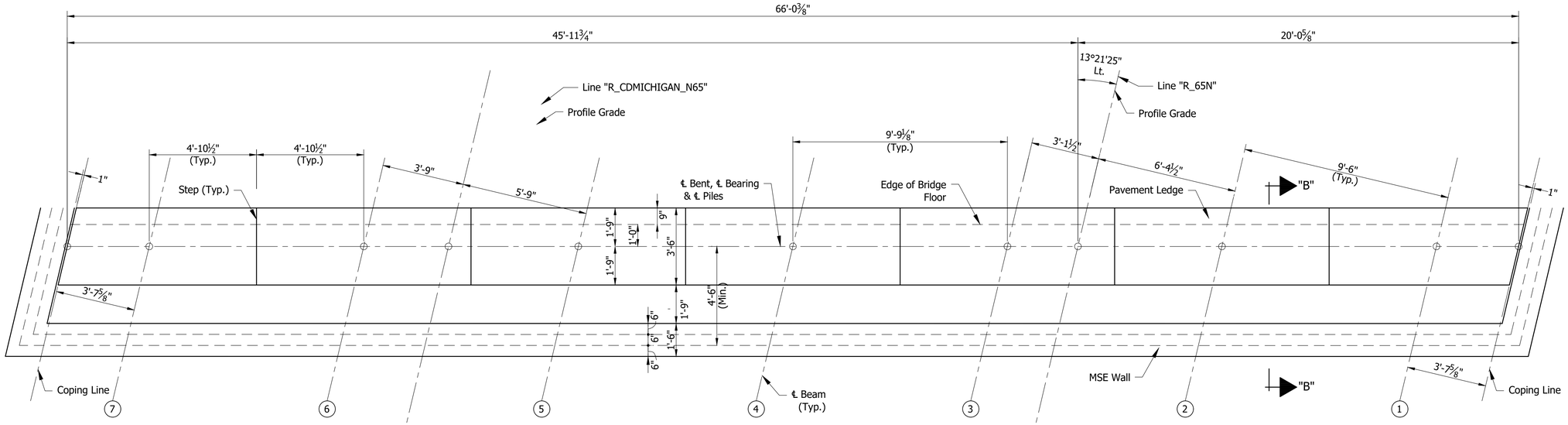

PLAN
BENT NO.1 NB (SHOWN)

Scale: ⅜"=1'-0"

SEAT ELEVATIONS							
Beam No.	7	6	5	4	3	2	1
Bent No.1	737.26	737.49	737.18	737.32	737.11	736.82	736.53

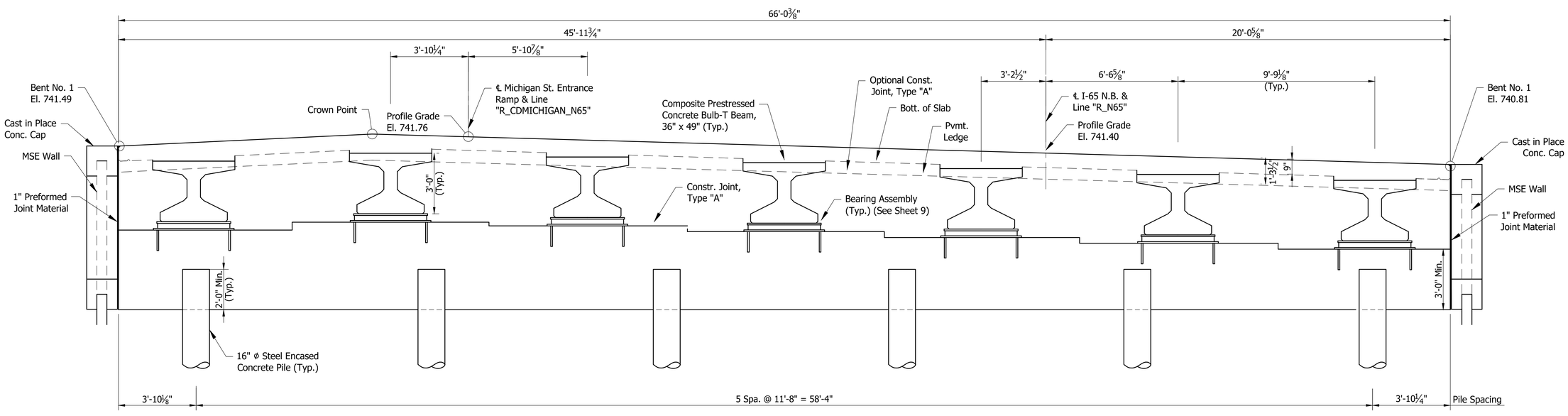

SECTION ALONG ℄ BENT

Scale: ⅜"=1'-0"

RECOMMENDED FOR APPROVAL: _____ DESIGN ENGINEER _____ DATE

DESIGNED: B. WRIGHT DRAWN: K. COFFMAN

CHECKED: M. EICHENAUER CHECKED: B.WRIGHT

INDIANA
DEPARTMENT OF TRANSPORTATION

BENT NO. 1 DETAILS

HORIZONTAL SCALE	BRIDGE FILE
As Noted	I65-111-10615 BNBL
VERTICAL SCALE	DESIGNATION
N/A	1901881
SURVEY BOOK	SHEET
ELECTRONIC	7 OF 15
CONTRACT	PROJECT
B-36910	1600808

BFS NO. 6412

\\bfsn1241\jobs5\641200.0000\ProjDevelopment\Design\Drawings\BRIDGES\07_OVER_ST_CLAIR_STREET\Structure 1901881\1901881_S_BR_BNT01.dwg Dylon Piercefield Plot:2/24/2020 6:32 AM Save:2/18/2020 12:57 PM

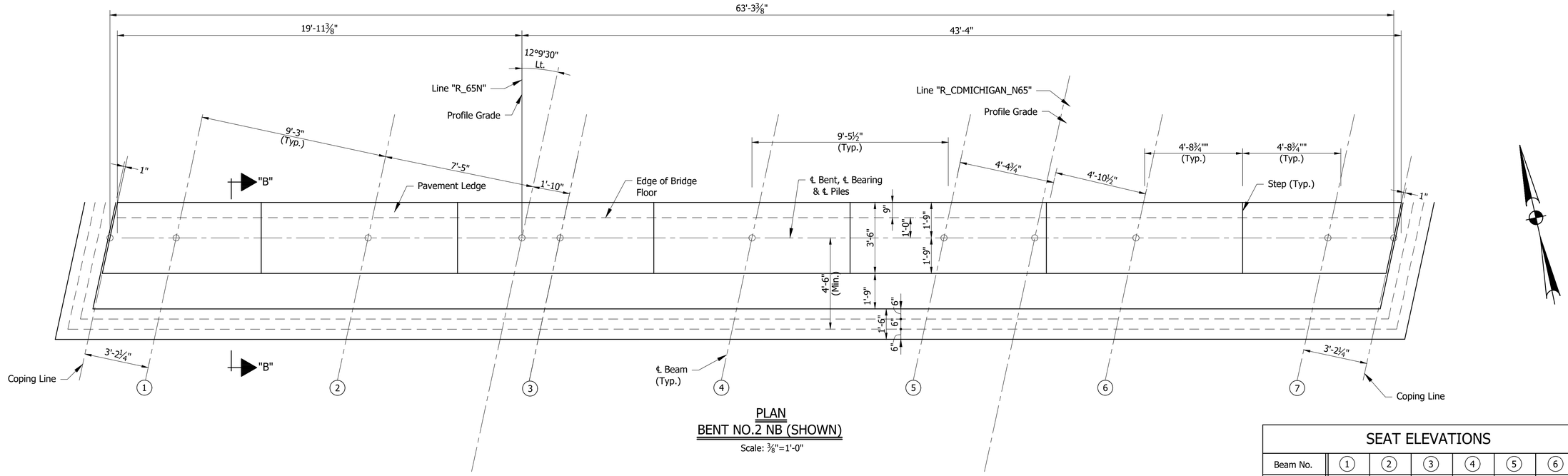

PLAN
BENT NO.2 NB (SHOWN)
Scale: ⅜"=1'-0"

SEAT ELEVATIONS							
Beam No.	1	2	3	4	5	6	7
Bent No.2	735.21	735.49	735.77	736.05	736.60	736.90	736.61

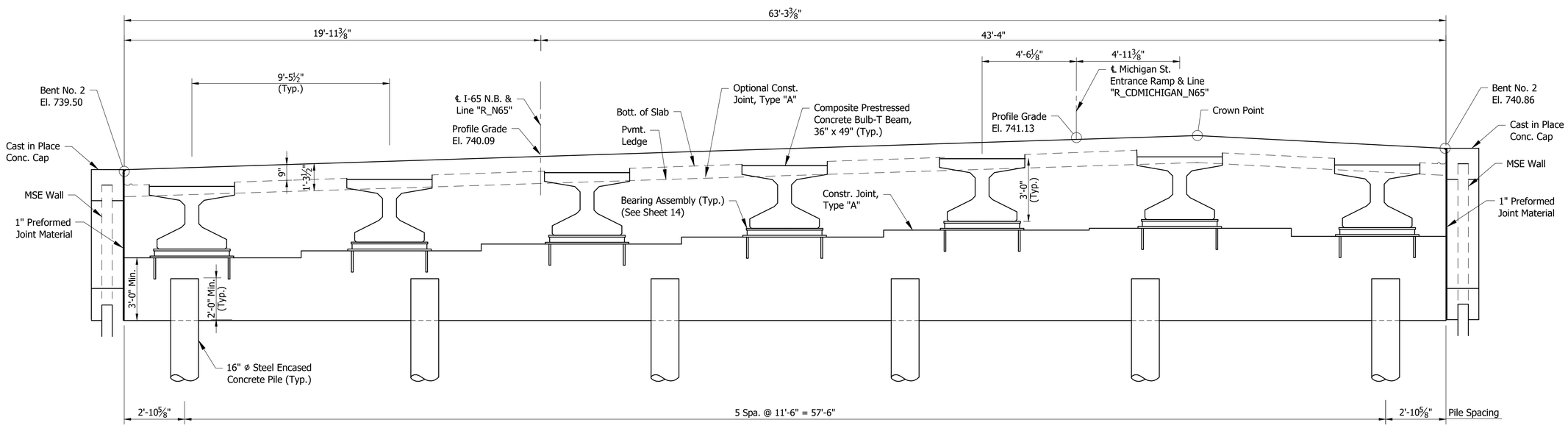

SECTION ALONG ℄ BENT
Scale: ⅜"=1'-0"

RECOMMENDED FOR APPROVAL: _____ DESIGN ENGINEER _____ DATE	INDIANA DEPARTMENT OF TRANSPORTATION	HORIZONTAL SCALE: As Noted	BRIDGE FILE: I65-111-10615 BNBL
		VERTICAL SCALE: N/A	DESIGNATION: 1901881
DESIGNED: B. WRIGHT DRAWN: K. COFFMAN	BENT NO. 2 DETAILS	SURVEY BOOK: ELECTRONIC	SHEET: 8 OF 15
CHECKED: M. EICHENAUER CHECKED: B. WRIGHT		CONTRACT: B-36910	PROJECT: 1600808

BFS NO. 6412

\\bfsn1241\jobs5\641200.0000\Pro\Development\Design\Drawings\BRIDGES\07_OVER_ST_CLAIR_STREET\Structure_1901881\1901881_S_BR_BNT02.dwg Dylan Piercefield Plot: 2/24/2020 6:32 AM Save: 2/18/2020 12:58 PM

⊛ As an alternate a ⅞"⌀x1'-3" Long Headed Automatic Welded Stud may be used.

⊗ Setting Tolerance of Bottom Plate-Level with to not more than 1/16" below top of Concrete.

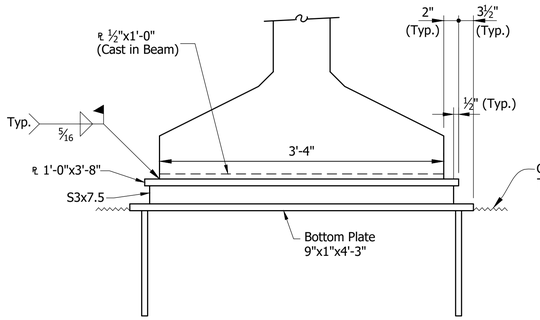

ELEVATION

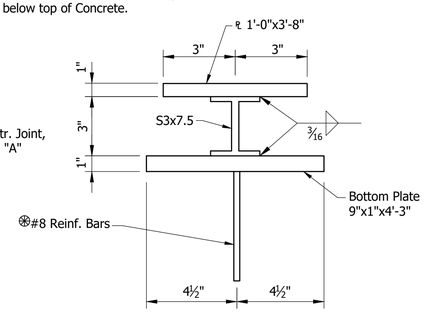

SECTION

BEARING ASSEMBLY

Not to Scale

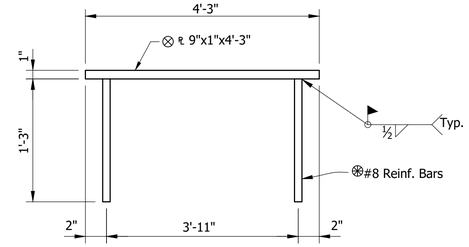

BOTTOM PLATE DETAIL

Not to Scale

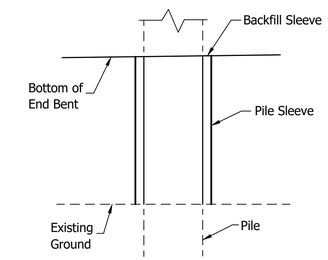

PILE SLEEVE DETAIL

Not to Scale

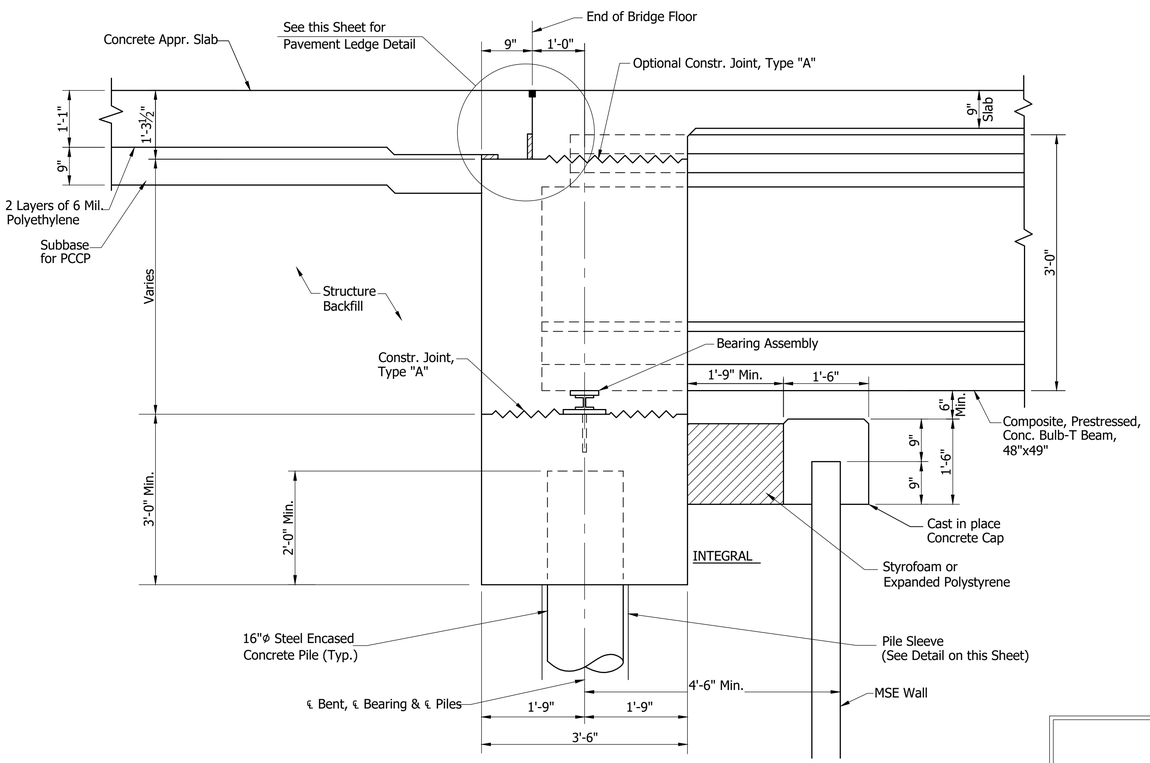

SECTION "B-B"

Not to Scale

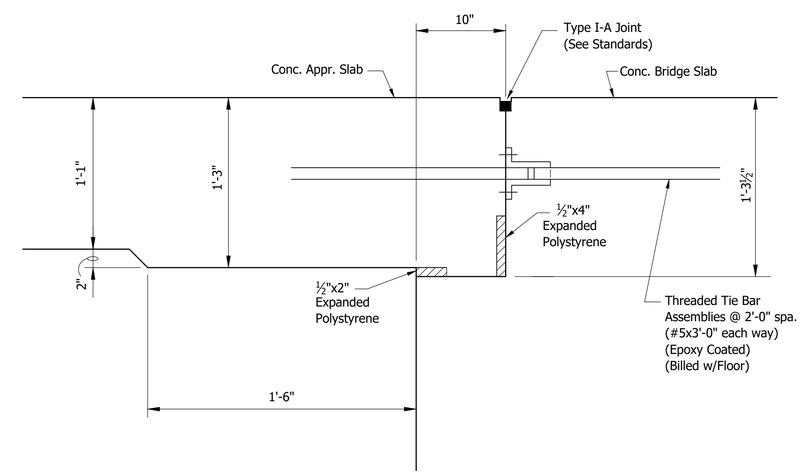

PAVEMENT LEDGE DETAIL

Not to Scale

RECOMMENDED FOR APPROVAL: DESIGN ENGINEER DATE	INDIANA DEPARTMENT OF TRANSPORTATION	HORIZONTAL SCALE: As Noted	BRIDGE FILE: I65-111-10615 BNBL
		VERTICAL SCALE: N/A	DESIGNATION: 1901881
DESIGNED: B. WRIGHT DRAWN: K. COFFMAN	BENTS NO. 1 AND NO. 2 DETAILS	SURVEY BOOK: ELECTRONIC	SHEET: 9 OF 15
CHECKED: M. EICHENAUER CHECKED: B. WRIGHT		CONTRACT: B-36910	PROJECT: 1600808

BFS NO. 6412

\\bfsnt241\jobs5\641200.0000\ProjDevelopment\Design\Drawings\BRIDGES\07 OVER ST CLAIR STREET\Structure 1901881\1901881_S_BR_BNT03.dwg Dylan Piercefield Plot: 2/24/2020 6:32 AM Save: 2/19/2020 3:49 PM

BEAM ERECTION PLAN

Scale: 1/8" = 1'-0"

RECOMMENDED FOR APPROVAL: DESIGN ENGINEER DATE	INDIANA DEPARTMENT OF TRANSPORTATION	HORIZONTAL SCALE: As Noted	BRIDGE FILE: I65-111-10615 BNBL	
		VERTICAL SCALE: N/A	DESIGNATION: 1901881	
DESIGNED: V. SATHIRAJU DRAWN: D. SHEETZ	FRAMING PLAN	SURVEY BOOK	SHEET	
CHECKED: B. WRIGHT CHECKED: B. WRIGHT		ELECTRONIC	10 OF 15	
		CONTRACT: B-36910	PROJECT: 1600808	

BFS NO. 6412

\\bfsn1241\jobs5\641200.0000\Proj_Development\Design\Drawings\BRIDGES\07 OVER ST CLAIR STREET\Structure 1901881\1901881_S_BR_FRM01.dwg Dylon Piercefield Plot:2/24/2020 6:32 AM Save:2/12/2020 11:03 AM

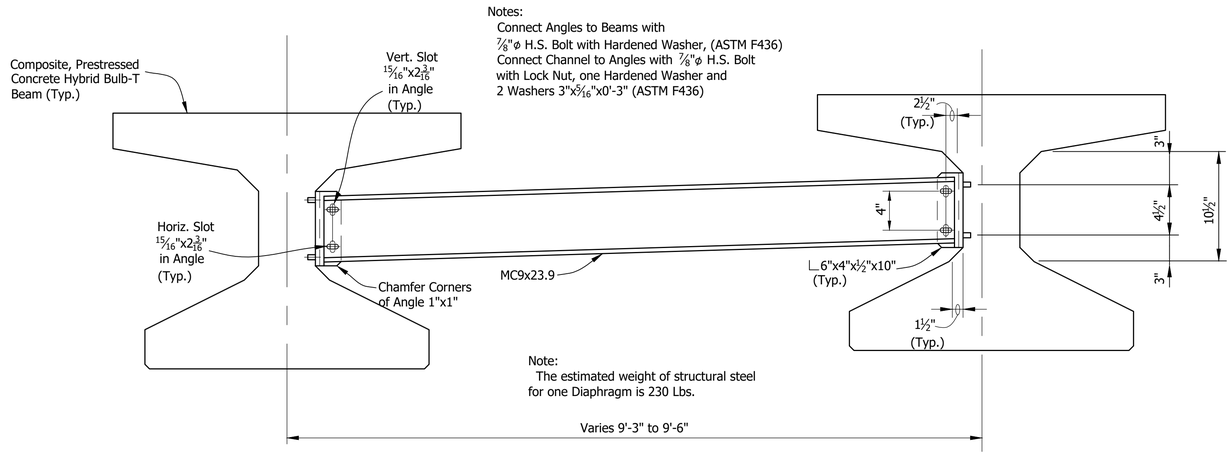

Notes:
Connect Angles to Beams with
⅞"ø H.S. Bolt with Hardened Washer, (ASTM F436)
Connect Channel to Angles with ⅞"ø H.S. Bolt
with Lock Nut, one Hardened Washer and
2 Washers 3"x5/16"x0'-3" (ASTM F436)

Note:
The estimated weight of structural steel
for one Diaphragm is 230 Lbs.

ELEVATION

Not to Scale

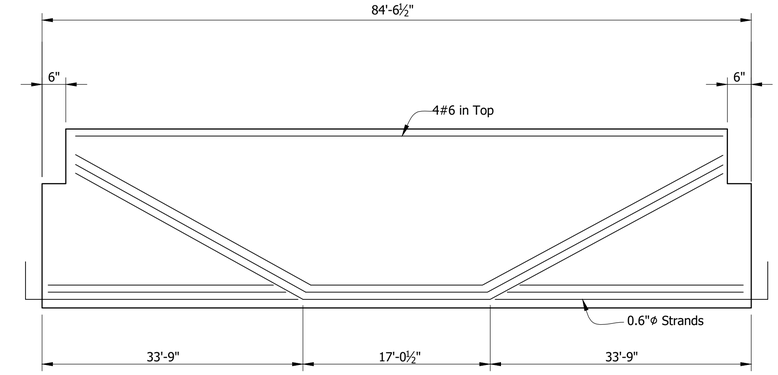

BEAM ELEVATION
SPAN "A"
SHOWING DRAPED STRANDS

Not to Scale

✳ Denotes Epoxy Coated

Note:
Bars 1" Clear
unless noted.

1. Surface Seal req'd on top of all Beams and Exterior Face of Exterior Beams
2. 1"ϕ Holes or ¾"ϕ Inserts for Dowels at Bent or Pier. (See Beam Plans)
3. PL ½"x12"x3'-2½" at End Bent Ends only

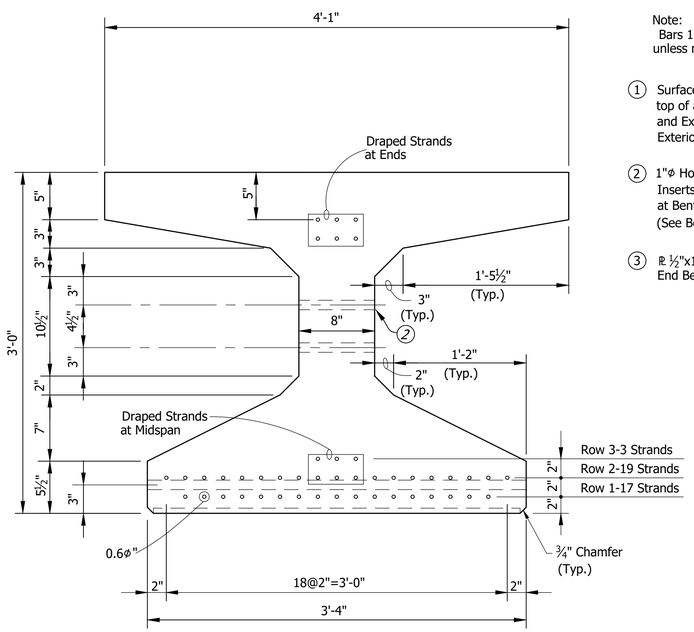

SECTION SHOWING STRANDS

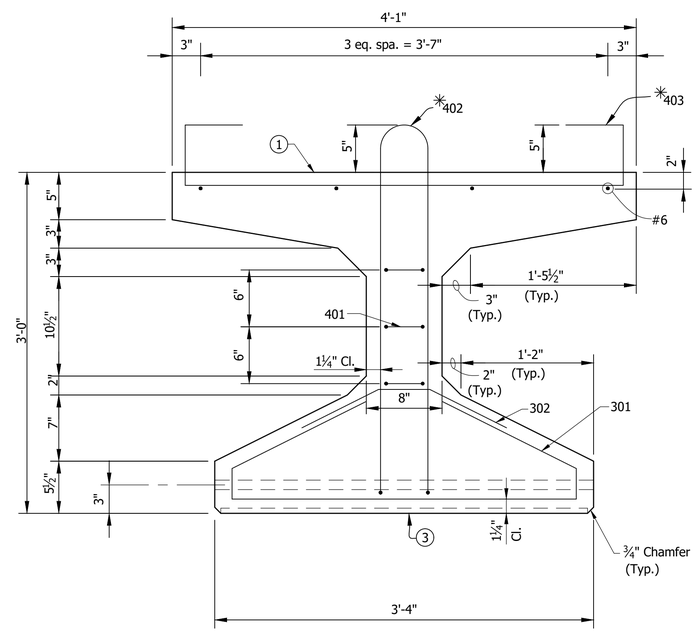

SECTION SHOWING REINFORCING

BEAM SECTIONS

Not to Scale

RECOMMENDED FOR APPROVAL: DESIGN ENGINEER DATE	INDIANA DEPARTMENT OF TRANSPORTATION	HORIZONTAL SCALE: As Noted	BRIDGE FILE: I65-111-10615 BNBL
		VERTICAL SCALE: N/A	DESIGNATION: 1901881
DESIGNED: V. SATHIRAJU DRAWN: D. PIERCEFIELD	BEAM DETAILS	SURVEY BOOK: ELECTRONIC	SHEET: 11 OF 15
CHECKED: B. WRIGHT CHECKED: B. WRIGHT		CONTRACT: B-36910	PROJECT: 1600808

BFS NO. 6412

\\bfsnt241\jobs5\641200.0000\ProjDevelopment\Design\Drawings\BRIDGES\07 OVER ST CLAIR STREET\Structure 1901881\1901881_S_BR_BN001.dwg Dylan Piercefield Plot: 2/24/2020 6:32 AM Save: 2/12/2020 9:48 AM

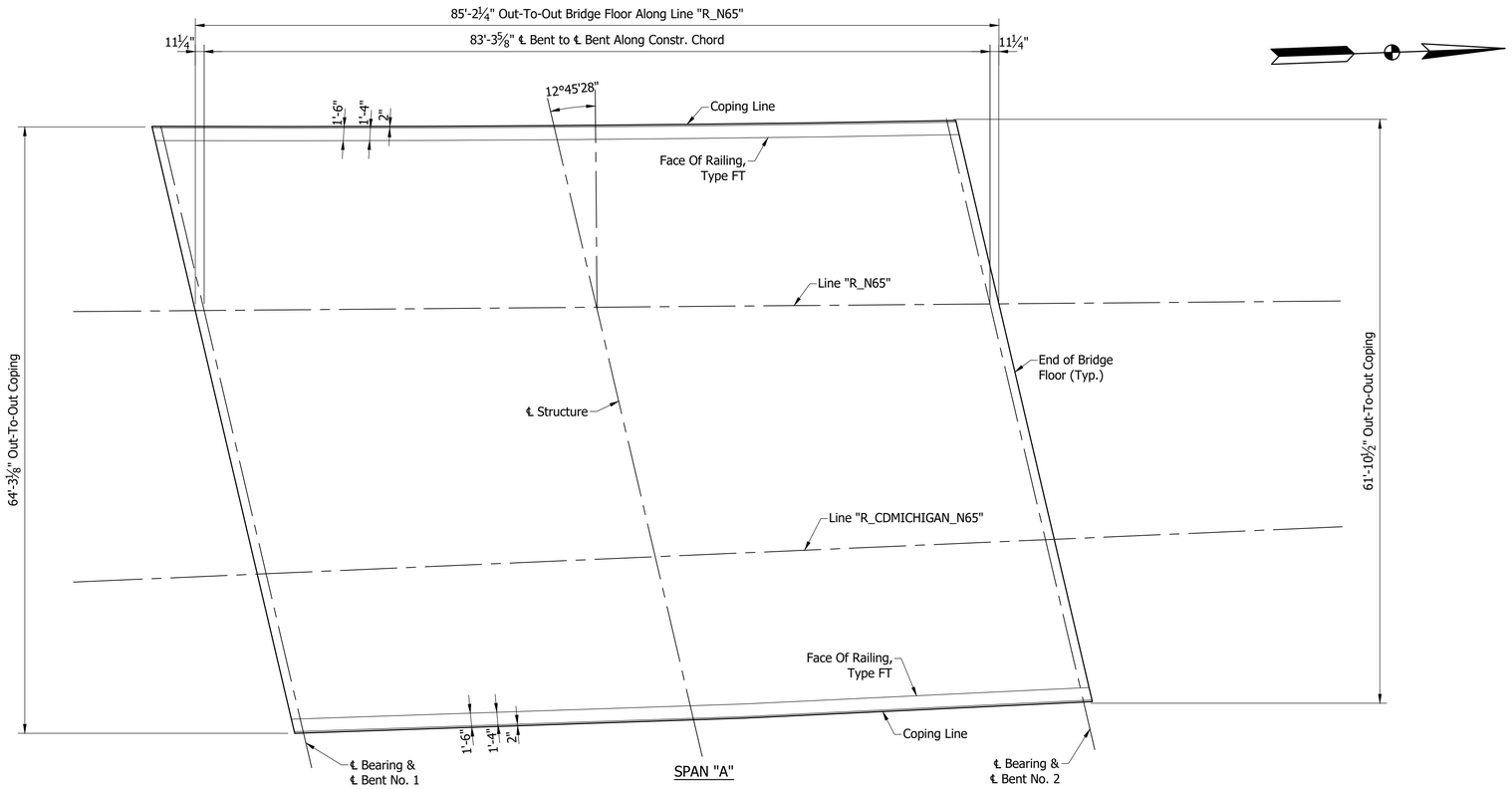

FLOOR PLAN

Scale: 1/8" = 1'-0"

NOTE:
See Sheet ___ For _____

RECOMMENDED FOR APPROVAL: _____ DESIGN ENGINEER _____ DATE	INDIANA DEPARTMENT OF TRANSPORTATION	HORIZONTAL SCALE: As Noted	BRIDGE FILE: I65-111-10615 BNBL	
		VERTICAL SCALE: N/A	DESIGNATION: 1901881	
DESIGNED: V. SATHIRAJU DRAWN: D. PIERCEFIELD	FLOOR DETAILS	SURVEY BOOK: ELECTRONIC	SHEET: 12 OF 15	
CHECKED: B. WRIGHT CHECKED: B. WRIGHT		CONTRACT: B-36910	PROJECT: 1600808	

BFS NO. 6412

\\bfsnt241\Jobs5\641200.0000\ProjDevelopment\Design\Drawings\BRIDGES\07 OVER ST CLAIR STREET\Structure 1901881\1901881_S_BR_FLR01.dwg Dylon Piercefield Plot:2/24/2020 6:32 AM Save:2/5/2020 8:40 AM

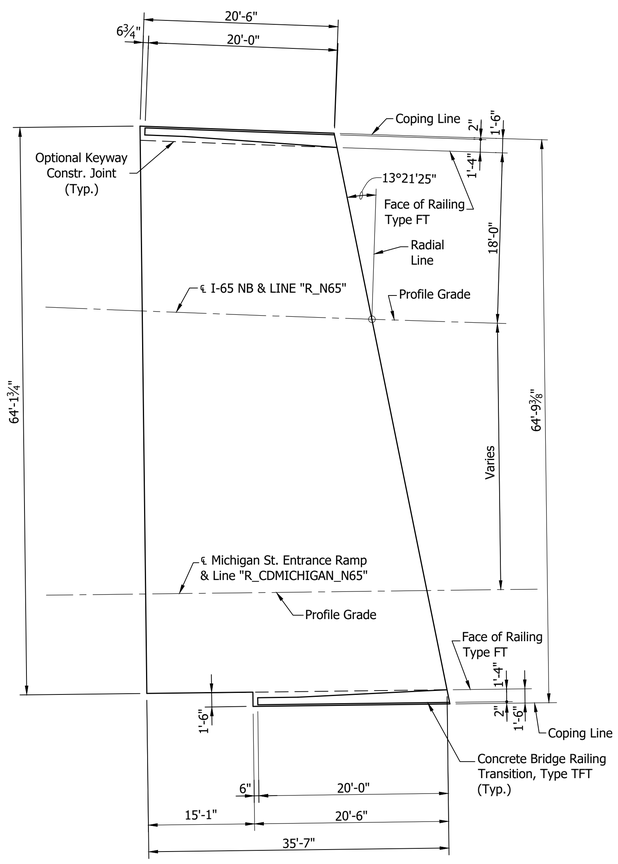

PLAN
SOUTH SLAB
Scale: ⅛"=1'-0"

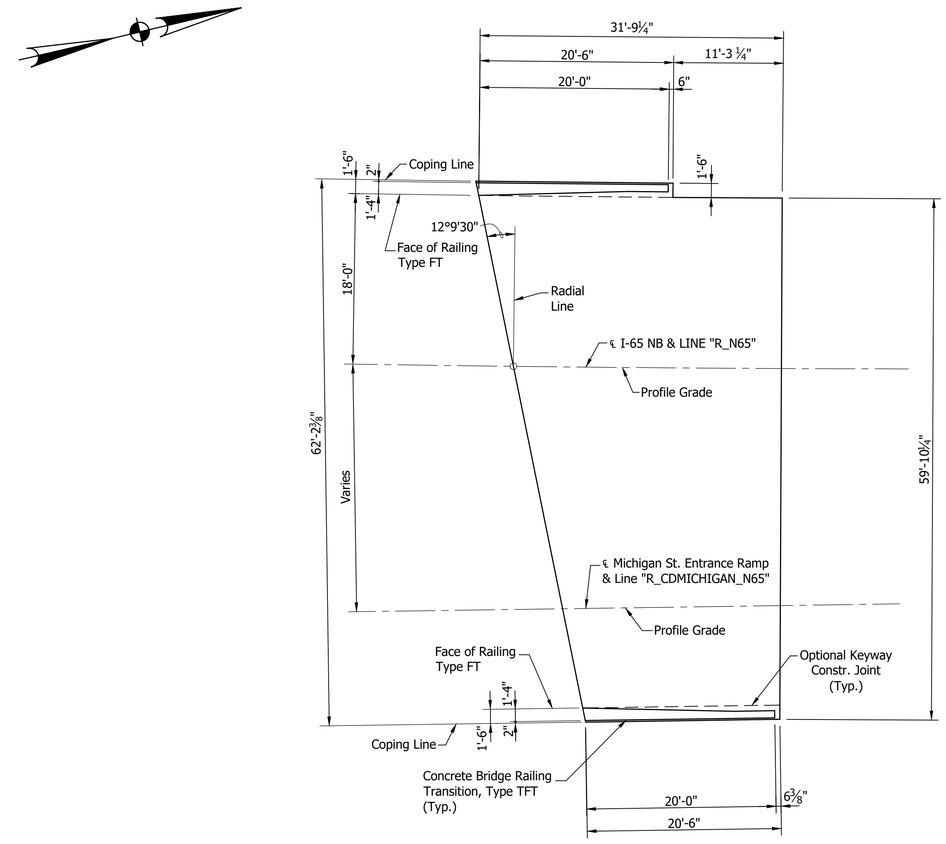

PLAN
NORTH SLAB
Scale: ⅛"=1'-0"

RECOMMENDED FOR APPROVAL: DESIGN ENGINEER DATE	INDIANA DEPARTMENT OF TRANSPORTATION	HORIZONTAL SCALE: As Noted	BRIDGE FILE: I65-111-10615 BNBL	
		VERTICAL SCALE: N/A	DESIGNATION: 1901881	
DESIGNED: D. SHEETZ DRAWN: D. SHEETZ	APPROACH SLAB	SURVEY BOOK: ELECTRONIC	SHEET: 13 OF 15	
CHECKED: B. WRIGHT CHECKED: B. WRIGHT		CONTRACT: B-36910	PROJECT: 1600808	

BFS NO. 6412

\\bfsn241\jobs5\641200.0000\Proj\Development\Design\Drawings\BRIDGES\07_OVER_ST_CLAIR_STREET\Structure_1901881\1901881_S_BR_APS01.dwg Dylon Piercefield Plot:2/24/2020 6:32 AM Save:2/18/2020 1:05 PM

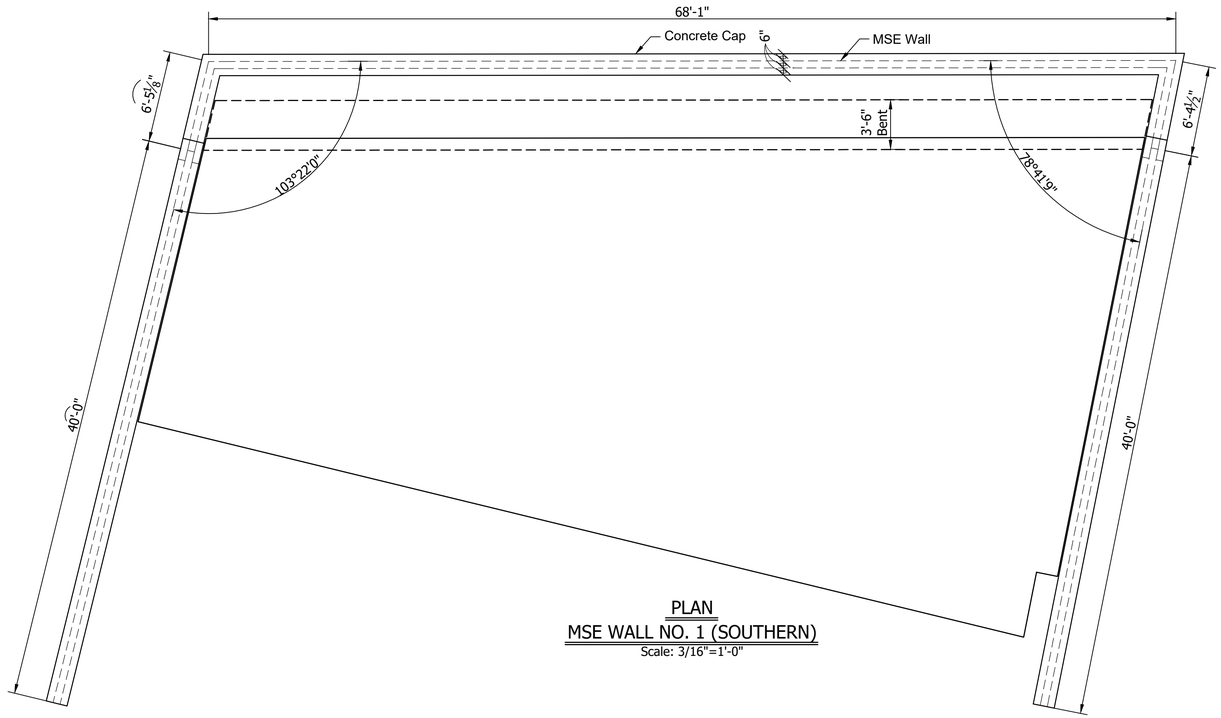

PLAN
MSE WALL NO. 1 (SOUTHERN)
Scale: 3/16"=1'-0"

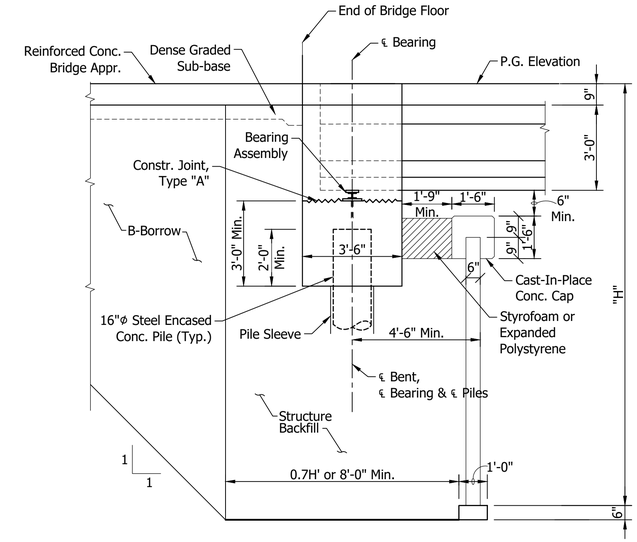

SECTION
MSE WALL NO. 1
Scale: 3/8"=1'-0"

NOTE:
Elevation Looking At Back Face of Wall

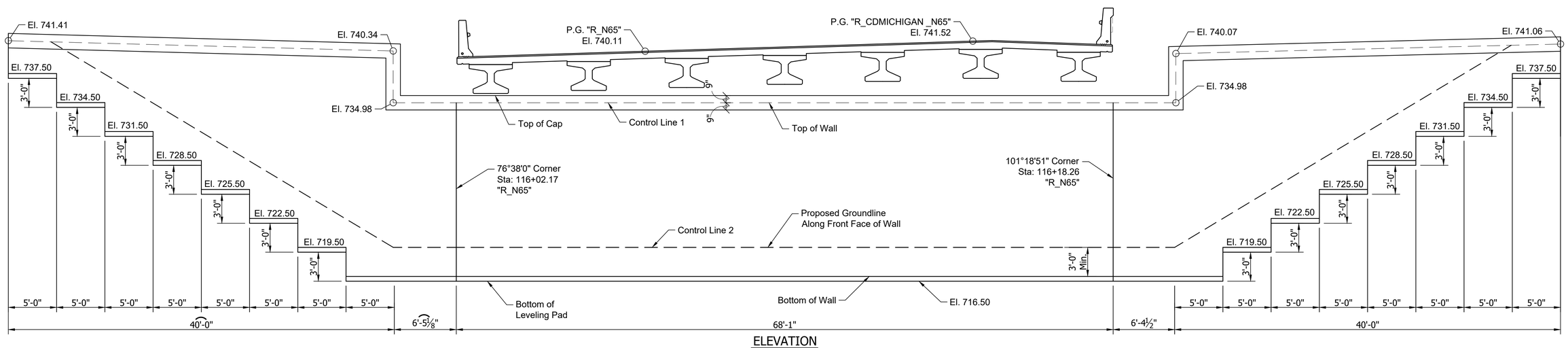

ELEVATION
MSE WALL NO. 1 (SOUTHERN)
Scale: 3/16"=1'-0"

RECOMMENDED FOR APPROVAL: DESIGN ENGINEER DATE	INDIANA DEPARTMENT OF TRANSPORTATION	HORIZONTAL SCALE: As Noted	BRIDGE FILE: I65-111-10615 BNBL
		VERTICAL SCALE: N/A	DESIGNATION: 1901881
DESIGNED: B. WRIGHT DRAWN: D. PIERCEFIELD	WALL LAYOUT	SURVEY BOOK: ELECTRONIC	SHEET: 14 OF 15
CHECKED: M. EICHENAUER CHECKED: B. WRIGHT		CONTRACT: B-36910	PROJECT: 1600808

6412

BFS NO.

\\bfsn1241\jobs5\641200.0000\Proj\Development\Design\Drawings\BRIDGES\07 OVER ST CLAIR STREET\Structure 1901881\1901881_S_BR_WL01.dwg Dylon Piercefield Plot:2/24/2020 8:52 AM Save:2/24/2020 8:50 AM

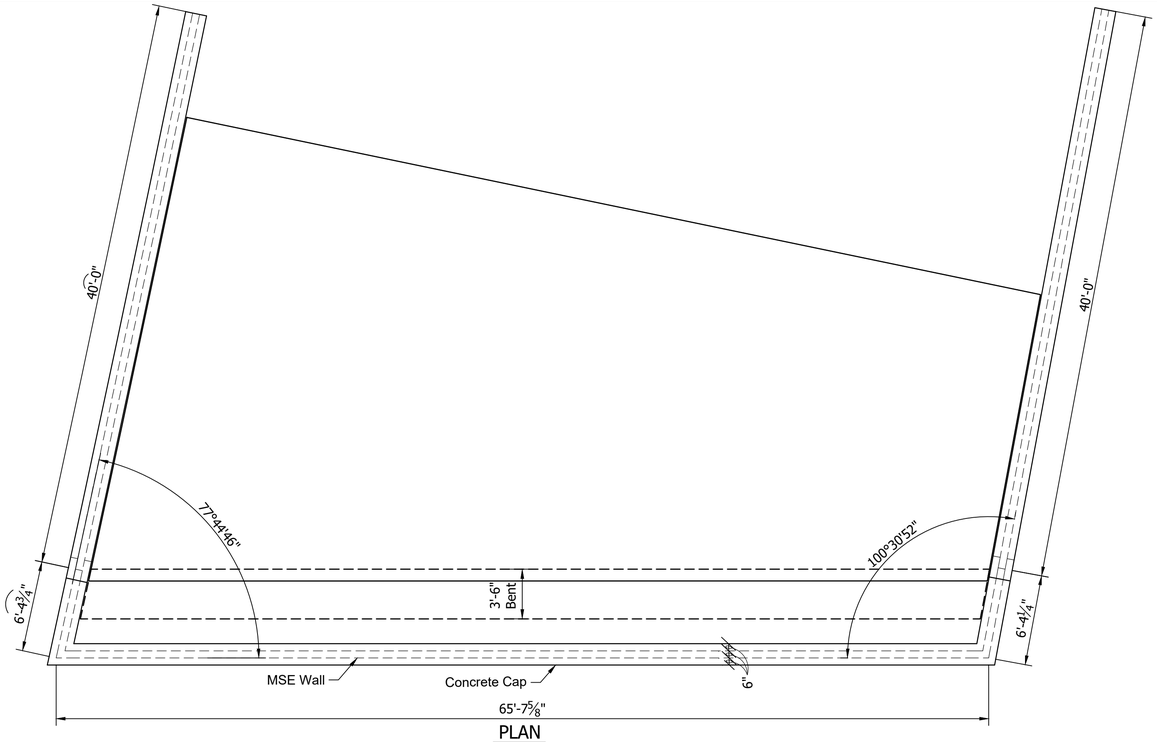

PLAN
MSE WALL NO. 2 (NORTHERN)
Scale: 3/16"=1'-0"

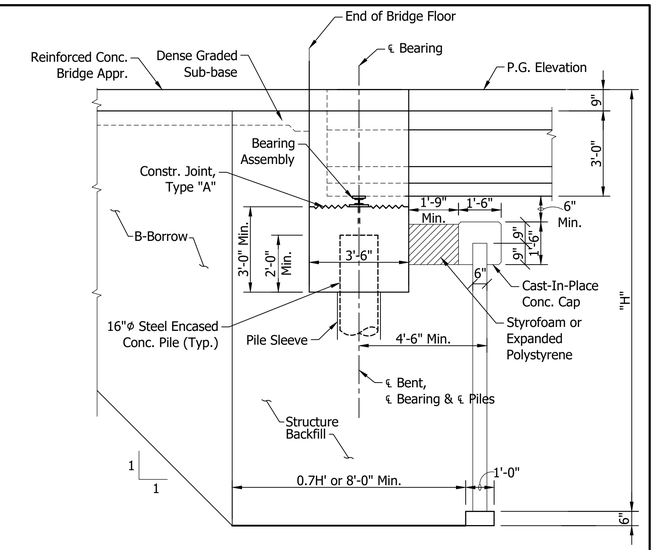

SECTION
MSE WALL NO. 2
Scale: 3/8"=1'-0"

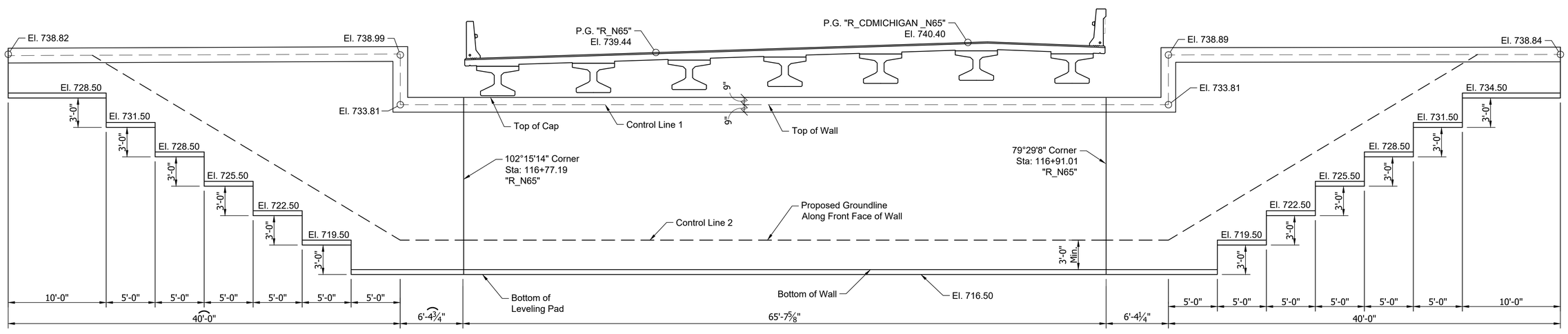

ELEVATION
MSE WALL NO. 2 (NORTHERN)
Scale: 3/16"=1'-0"

RECOMMENDED FOR APPROVAL: DESIGN ENGINEER DATE	INDIANA DEPARTMENT OF TRANSPORTATION	HORIZONTAL SCALE: AS NOTED	BRIDGE FILE: I65-111-10615 BNBL
		VERTICAL SCALE: AS NOTED	DESIGNATION: 1901881
DESIGNED: B. WRIGHT DRAWN: D. PIERCEFIELD	WALL LAYOUT	SURVEY BOOK: ELECTRONIC	SHEET: 15 OF 15
CHECKED: M. EICHENAUER CHECKED: B. WRIGHT		CONTRACT: B-36910	PROJECT: 1600808

BFS NO. 6412

\\bfsnt241\Jobs5\641200.0000\Proj\Development\Design\Drawings\BRIDGES\07 OVER ST CLAIR STREET\Structure 1901881\1901881_S_BR_WL02.dwg Dylon Piercefield Plot:2/24/2020 8:52 AM Save:2/24/2020 8:49 AM

PROJECT	DESIGNATION
1600808	1901889
CONTRACT	BRIDGE FILE
B-36910	I70-111-10616 EBL

STRUCTURE INFORMATION

STRUCTURE	TYPE	SPAN & SKEW	OVER	STATION
I70-111-10616 EBL	PRESTRESSED COMPOSITE CONCRETE BULB-TEE BEAM BRIDGE	1 SPAN: 87'-7 1/4" SKEW 19°57'55" LT.	ST. CLAIR STREET	116+32.45 LINE "R_E70"

INDIANA DEPARTMENT OF TRANSPORTATION

BRIDGE PLANS

FOR SPANS OVER 20 FEET

ROUTE: I-70 E.B. AT: RP 111+95

PROJECT NO. 1600808 P.E.

1600808 CONST.

NO ADDITIONAL RIGHT OF WAY REQUIRED FOR THIS PROJECT

BRIDGE REPLACEMENT ON I-70 E.B. OVER ST. CLAIR STREET
LOCATED 1.65 MILES NORTH OF I-70 (SOUTH SPLIT) INTERCHANGE
SECTION 1, TOWNSHIP 15 NORTH, RANGE 3 EAST
CENTER TOWNSHIP, MARION COUNTY INDIANA

TRAFFIC DATA	I-70 E.B.	ST. CLAIR STREET
A.D.T. (2021)	48,860 V.P.D.	1,082 V.P.D.
A.D.T. (2041)	57,330 V.P.D.	1,427 V.P.D.
D.H.V. (2041)	5,733 V.P.H.	174 V.P.H.
DIRECTIONAL DISTRIBUTION	100 %	60 %
TRUCKS	13% D.H.V.	4 % D.H.V.

DESIGN DATA		
DESIGN SPEED	50 M.P.H.	25 M.P.H.
PROJECT DESIGN CRITERIA	4R (FREEWAY)	N/A
FUNCTIONAL CLASSIFICATION	URBAN FREEWAY	LOCAL ROAD
RURAL/URBAN	URBAN (BUILT-UP)	URBAN (BUILT-UP)
TERRAIN	LEVEL	LEVEL
ACCESS CONTROL	FULL CONTROL	NONE

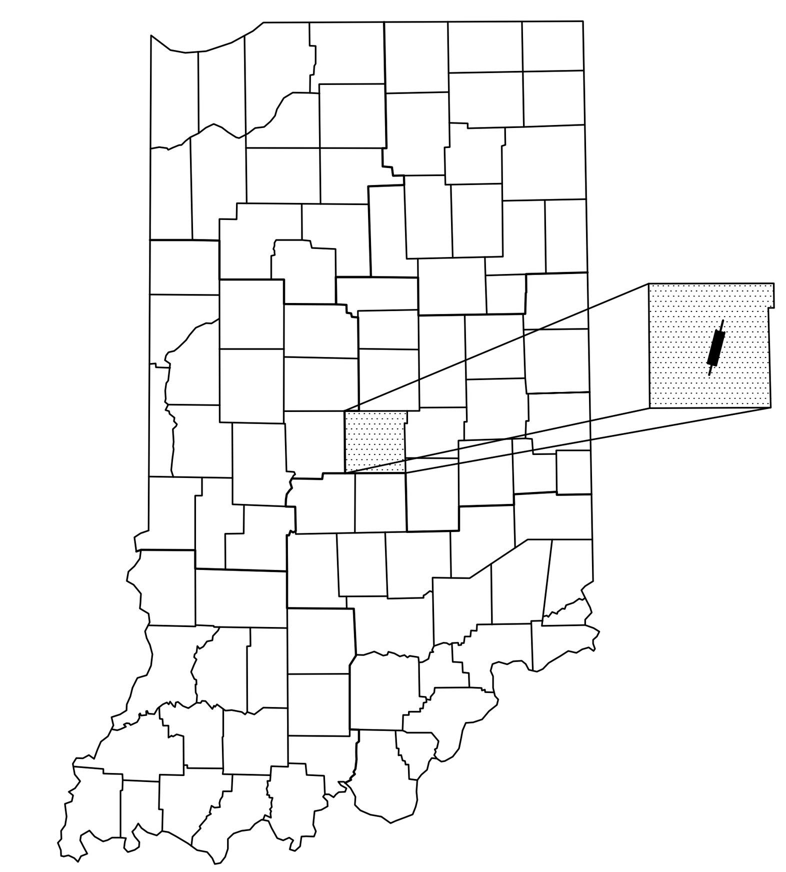

PROJECT LOCATION SHOWN BY

LATITUDE: 39°46'39" N LONGITUDE: 86°08'30" W

BRIDGE LENGTH :	0.017 MI.
ROADWAY LENGTH :	SEE ROAD PLANS
TOTAL LENGTH :	SEE ROAD PLANS
MAX GRADE :	1.37%

HUC: 05120201130020

END PROJECT No. 1600808
STATION 25+75.00 LINE "P_ALG_I65"

END PROJECT No. 1600808
STATION 41+85.70 LINE "P_ALG_I70"

R. 3 E. | R. 4 E.

T. 16 N.
T. 15 N.

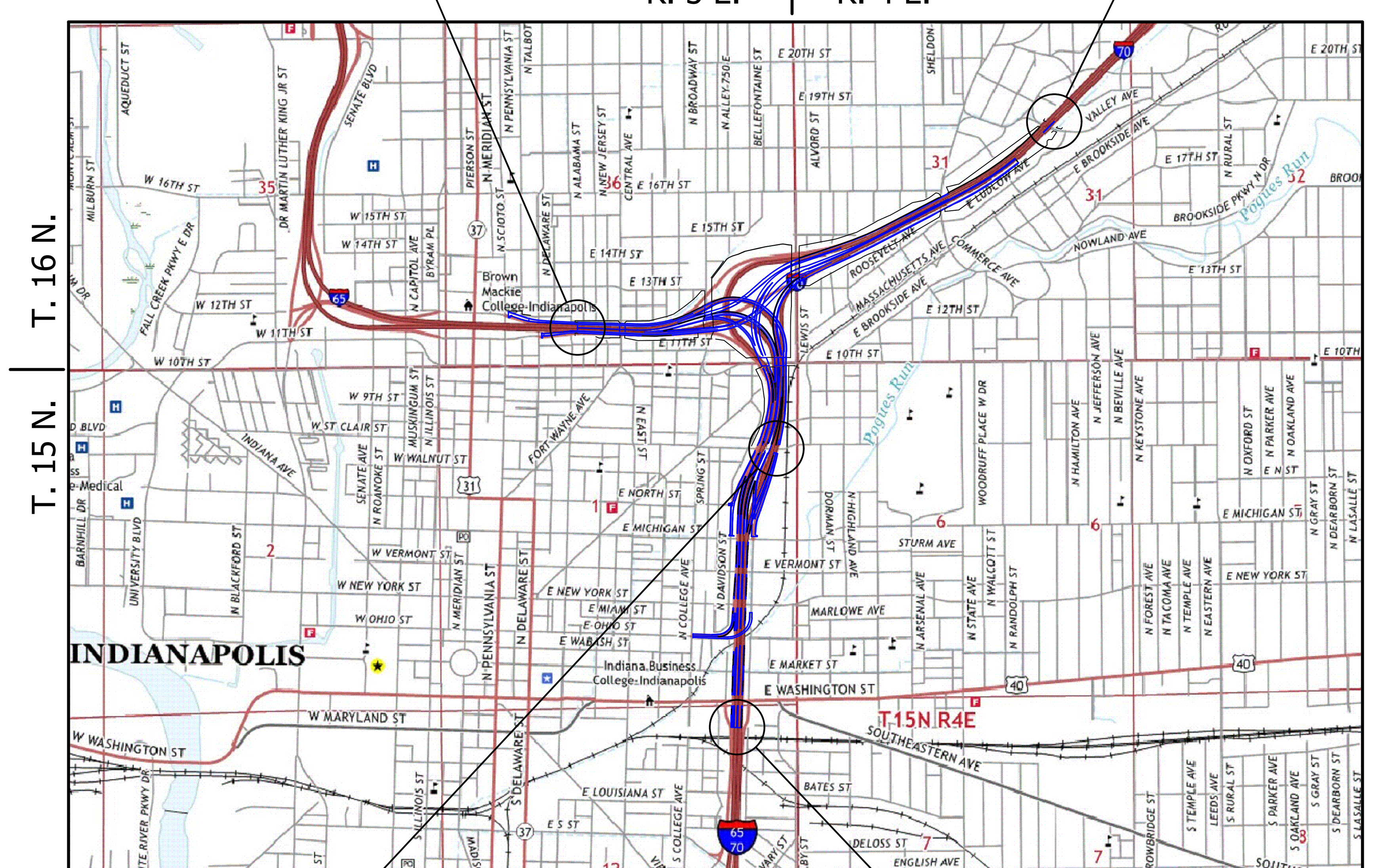

SCALE: 1" = 2000'

PROJECT LOCATION
BRIDGE FILE No. I70-111-10616 EBL
I-70 E.B. OVER ST. CLAIR STREET
STA. 116+32.45 LINE "R_E70"

LOCATION MAP
MARION COUNTY

BEGIN PROJECT No. 1600808
STATION 113+00.00 LINE "P_ALG_I65/I70"

INDIANA DEPARTMENT OF TRANSPORTATION STANDARD SPECIFICATIONS DATED 2020 TO BE USED WITH THESE PLANS.

SUPERIOR CONSTRUCTION

PLANS PREPARED BY: Butler Fairman and Seufert Inc. (317)713-4615 PHONE

CERTIFIED BY: #/#/# DATE

APPROVED FOR LETTING: INDIANA DEPARTMENT OF TRANSPORTATION #/#/# DATE

	BRIDGE FILE
	I70-111-10616 EBL
	DESIGNATION
	1901889
SURVEY BOOK	SHEET
ELECTRONIC	1 OF 15
CONTRACT	PROJECT
B-36910	1600808

6412

\\bfsn1241\Jobs5\641200.0000\ProjDevelopment\Design\Drawings\BRIDGES\I70 OVER ST CLAIR STREET\Structure 1901889\1901889_S_BR_TTL01.dwg Dylan Piercefield Plot:2/24/2020 6:34 AM Save:2/21/2020 10:34 AM

UTILITIES

REVISIONS

SHEET NO.	DATE	REVISED

KIN PROJECT INFORMATION

DESIGNATION	PROJECT DESCRIPTION	
1600808	COMPLETE ROAD RECONSTRUCTION OF I-65/I-70 FROM WASHINGTON STREET TO I-65 OVER DELAWARE STREET AND I-70 OVER VALLEY AVENUE	LEAD DES
1901935	ITS FOR I-65/I-70 FROM WASHINGTON STREET TO I-65 OVER DELAWARE STREET AND I-70 OVER VALLEY AVENUE	
1901936	SIGNS, LIGHTING, SIGNALS AND MARKING FOR I-65/I-70 FROM WASHINGTON STREET TO I-65 OVER DELAWARE STREET AND I-70 OVER VALLEY AVENUE	
1901847	BRIDGE REPLACEMENT ON I-65/I-70 NB OVER WASHINGTON STREET	
1901848	BRIDGE REPLACEMENT ON I-65/I-70 SB OVER WASHINGTON STREET	
1901849	BRIDGE REPLACEMENT ON I-65/I-70 SB CD OVER WASHINGTON STREET	
1901850	BRIDGE REPLACEMENT ON I-65/I-70 NB OVER MARKET STREET	
1901851	BRIDGE REPLACEMENT ON I-65/I-70 SB OVER MARKET STREET	
1901852	BRIDGE REPLACEMENT ON I-65/I-70 SB CD OVER MARKET STREET	
1901853	BRIDGE REPLACEMENT ON I-65/I-70 NB OVER CSX RAILROAD & OHIO STREET	
1901854	BRIDGE REPLACEMENT ON I-65/I-70 SB OVER CSX RAILROAD & OHIO STREET	
1901855	BRIDGE REPLACEMENT ON I-65/I-70 SB CD OVER CSX RAILROAD & OHIO STREET	
1901856	BRIDGE REPLACEMENT ON I-65/I-70 NB OVER NEW YORK STREET	
1901857	BRIDGE REPLACEMENT ON I-65/I-70 SB OVER NEW YORK STREET	
1901858	BRIDGE REPLACEMENT ON I-65/I-70 SB CD OVER NEW YORK STREET	
1901861	BRIDGE REPLACEMENT ON I-65/I-70 SB CD OVER VERMONT STREET	
1901862	BRIDGE REPLACEMENT ON I-65 NB & I-70 EB OVER MICHIGAN STREET	
1901863	BRIDGE REPLACEMENT ON I-65 SB/I-70 WB OVER MICHIGAN STREET	
1901864	BRIDGE REPLACEMENT ON I-65/I-70 SB CD OVER MICHIGAN STREET	
1901865	BRIDGE REPLACEMENT ON I-65 NB OVER I-70 EB ENTRANCE RAMP	
1901881	BRIDGE REPLACEMENT ON I-65 NB OVER ST. CLAIR STREET	
1901889	NEW BRIDGE CONSTRUCTION ON I-70 EB OVER ST. CLAIR STREET	
1901892	BRIDGE REPLACEMENT ON I-65 SB/I-70 WB OVER ST. CLAIR STREET	
1901896	NEW BRIDGE CONSTRUCTION ON SB CD OVER ST. CLAIR STREET	
1901897	BRIDGE REPLACEMENT ON I-65 NB OVER EAST 10TH STREET	
1901899	NEW BRIDGE CONSTRUCTION ON I-70 EB OVER EAST 10TH STREET	
1901901	BRIDGE REPLACEMENT ON I-65 SB OVER EAST 10TH STREET	
1901903	BRIDGE REPLACEMENT ON I-70 WB OVER EAST 10TH STREET	
1901905	NEW BRIDGE CONSTRUCTION ON SB CD & RAMP OVER EAST 10TH STREET	
1901906	NEW BRIDGE CONSTRUCTION ON I-65 NB CD EXIT RAMP OVER CENTRAL AVENUE	
1901907	BRIDGE REPLACEMENT ON I-65 NB OVER CENTRAL AVENUE	
1901908	BRIDGE REPLACEMENT ON I-65 SB OVER CENTRAL AVENUE	
1901909	NEW BRIDGE CONSTRUCTION ON I-65 SB CD ENTRANCE RAMP OVER CENTRAL AVE.	
1901914	BRIDGE REPLACEMENT ON I-70 WB TO I-65 NB OVER COLLEGE AVENUE	
1901915	BRIDGE REPLACEMENT ON I-65 NB & PENNSYLVANIA EXIT RAMP OVER COLLEGE AVENUE	
1901917	BRIDGE REPLACEMENT ON I-65 SB & SB CD RAMP OVER COLLEGE AVENUE	
1901918	BRIDGE REPLACEMENT ON I-65 SB & DELAWARE ENTRANCE RAMP TO I-70 EB OVER COLLEGE AVENUE & FIVE RAMPS	
1901919	BRIDGE REPLACEMENT ON I-65 NB OVER I-70 WB & RAMP	
1901920	BRIDGE REPLACEMENT ON I-70 WB TO I-65 NB OVER THREE RAMPS	
1901921	BRIDGE REPLACEMENT ON I-65 SB OVER I-70 WB & SB CD RAMP	
1901922	NEW BRIDGE CONSTRUCTION ON I-70 EB OVER I-65 NB	
1901923	BRIDGE REPLACEMENT ON I-70 WB & SB CD OVER LEWIS STREET & MONON TRAIL	
1901925	NEW BRIDGE CONSTRUCTION ON I-70 WB TO I-65 NB OVER LEWIS STREET & MONON TRAIL	
1901927	NOT USED	
1901928	BRIDGE REPLACEMENT ON I-70 EB OVER LEWIS STREET & MONON TRAIL	
1901929	PREVENTATIVE MAINTENANCE ON I-70 WB OVER ROOSEVELT AT COMMERCE AVENUE	
1901930	PREVENTATIVE MAINTENANCE ON I-70 EB OVER ROOSEVELT AT COMMERCE AVENUE	
1901931	PREVENTATIVE MAINTENANCE ON I-70 WB OVER VALLEY AVENUE	
1901932	PREVENTATIVE MAINTENANCE ON I-70 EB OVER VALLEY AVENUE	
1901933	REHABILITATE AND WIDEN ON I-65 OVER 7 STREETS, ACCESS RD, MONORAIL (AKA "MONSTER BRIDGE") - PENNSYLVANIA EXIT RAMP	
1901934	REHABILITATE AND WIDEN ON I-65 OVER 7 STREETS, ACCESS RD, MONORAIL (AKA "MONSTER BRIDGE") - DELAWARE ENTRANCE RAMP	
1902179	BRIDGE REPLACEMENT ON I-65 NB/I70 EB OVER VERMONT STREET	
1902180	BRIDGE REPLACEMENT ON I-65 SB/I70 WB OVER VERMONT STREET	

INDEX

SHEET NO.	DESIGNATION
1	TITLE
2	INDEX
3	MAINTENANCE OF TRAFFIC
4	LAYOUT
5	GENERAL PLAN - PLAN & ELEVATION VIEWS
6	GENERAL PLAN - TYPICAL SECTION
7	BENT NO. 1 DETAILS
8	BENT NO. 2 DETAILS
9	BENTS NO. 1 AND NO. 2 DETAILS
10	FRAMING PLAN
11	BEAM DETAILS
12	FLOOR DETAILS
13	APPROACH SLAB
14	WALL LAYOUT
15	WALL LAYOUT

RECOMMENDED FOR APPROVAL: _____ DESIGN ENGINEER #/#/# DATE

DESIGNED: B. WRIGHT DRAWN: L. KIRSCH

CHECKED: M. EICHENAUER CHECKED: B. WRIGHT

INDIANA
DEPARTMENT OF TRANSPORTATION

INDEX

HORIZONTAL SCALE	BRIDGE FILE
N/A	I70-111-10616 EBL
VERTICAL SCALE	DESIGNATION
N/A	1901889
SURVEY BOOK	SHEET
ELECTRONIC	2 OF 15
CONTRACT	PROJECT
B-36910	1600808

BFS NO. 6412

\\bsn1241\Jobs5\641200.0000\ProjDevelopment\Design\Drawings\BRIDGES\07 OVER ST CLAIR STREET\Structure 1901889\1901889_S_BR_IND01.dwg Dylan Piercefield Plot: 2/24/2020 9:45 AM Save: 2/24/2020 9:41 AM

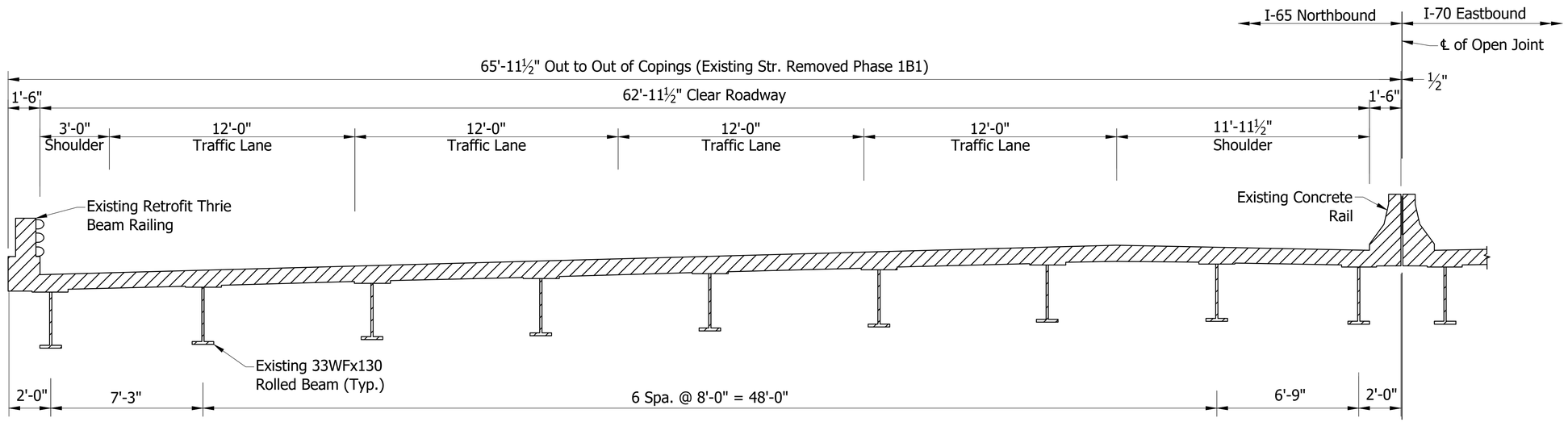

EXISTING I-65 NORTHBOUND TYPICAL SECTION

NOT TO SCALE

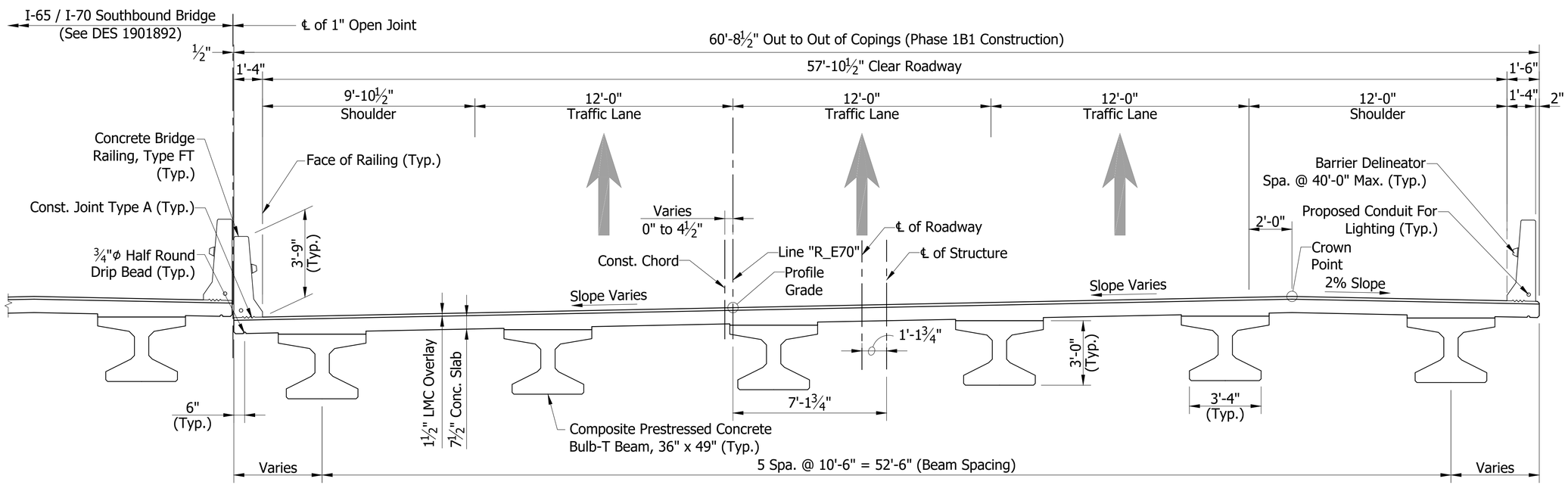

TYPICAL SECTION

Scale: 1/4"= 1'-0"

RECOMMENDED FOR APPROVAL: _____ DESIGN ENGINEER DATE	INDIANA DEPARTMENT OF TRANSPORTATION	HORIZONTAL SCALE: As Noted	BRIDGE FILE: I70-111-10616 EBL
		VERTICAL SCALE: N/A	DESIGNATION: 1901889
DESIGNED: B. WRIGHT DRAWN: K. COFFMAN	MAINTENANCE OF TRAFFIC	SURVEY BOOK	SHEET
CHECKED: M. EICHENAUER CHECKED: B. WRIGHT		ELECTRONIC	3 OF 15
		CONTRACT	PROJECT
		B-36910	1600808

BFS NO. 6412

\\bfsn1241\Jobs5\641200.0000\ProjDevelopment\Design\Drawings\BRIDGES\07 OVER ST CLAIR STREET\Structure 1901889\1901889_S_BR_MOT01.dwg Dylan Piercefield Plot:2/24/2020 6:35 AM Save:2/6/2020 1:48 PM

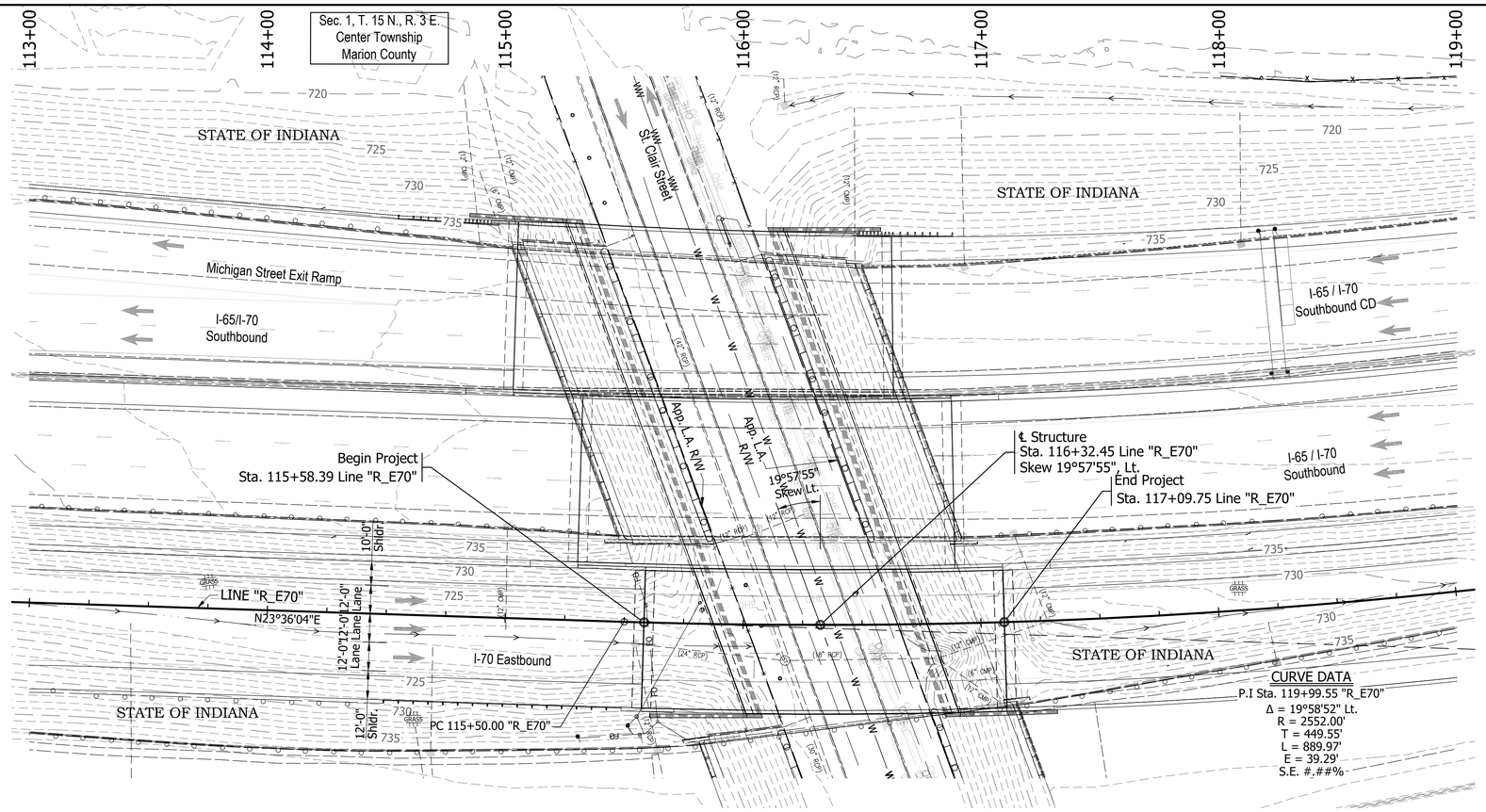

EXISTING STRUCTURE

The existing structure was built in 1974. Structure was rehabilitated in 2003. The structure is a 3-span continuous composite 33" WF steel beam.

Span lengths: 1 @ 37'-0", 1 @ 68'-0", 1 @ 37'-0"

Clear roadway 58'-8½". Total length of 146'-0 1/8"

Existing structure to be removed.

Existing plans are on file with the Indiana Department of Transportation under Bridge File No. I-65-112-5736 & I-65-112-5736A.

EARTHWORK TABULATION

See Roadway Plans (DES #_____) for earthwork tabulation.

NOTE: ALL TOPOGRAPHY INFORMATION REFERENCED TO LINE "_____" UNLESS NOTED.

ALL R/W ON THIS SHEET DESCRIBED FROM LINE "_____" UNLESS OTHERWISE NOTED

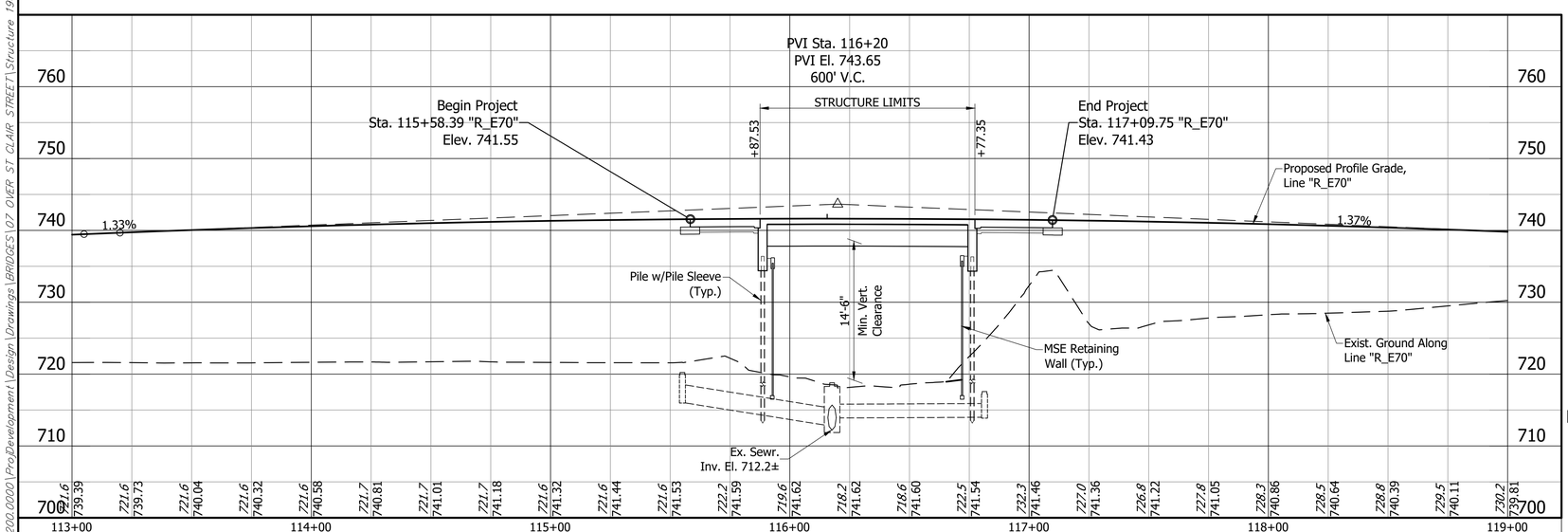

Notes:

1. For R/W and property information, see Location Control Route Survey (DES # _____).
2. For alignment data, see Geometric Layout Sheets (DES #_____).
3. See Road Plans (DES #_____) for Horizontal & Vertical Control Data.

PRESTRESSED COMPOSITE CONCRETE BULB-TEE BEAM BRIDGE
1 SPAN: 87'-7 1/4"
57'-10 1/2" CLEAR ROADWAY
SKEW 19°57'55" LT.
I-70 E.B. OVER ST. CLAIR STREET
MARION COUNTY

RECOMMENDED FOR APPROVAL: _____ DESIGN ENGINEER #/#/# DATE

DESIGNED: B. WRIGHT DRAWN: L. KIRSCH
CHECKED: M. EICHENAUER CHECKED: B. WRIGHT

INDIANA
DEPARTMENT OF TRANSPORTATION

LAYOUT

HORIZONTAL SCALE	BRIDGE FILE
1" = 30'	I70-111-10616 EBL
VERTICAL SCALE	DESIGNATION
1" = 10'	1901889

SURVEY BOOK	SHEET		
ELECTRONIC	4	OF	15
CONTRACT	PROJECT		
B-36910	1600808		

BFS NO. 6412

\\bfsn1241\Jobs5\641200.0000\ProjDevelopment\Design\Drawings\BRIDGES\07_OVER_ST_CLAIR_STREET\Structure_1901889\1901889_S_BR_LAY01.dwg Dylan Piercefield Plot: 2/24/2020 9:45 AM Save: 2/24/2020 9:43 AM

STRUCTURE TO BE BUILT ON A 600' VERTICAL CURVE

PVI Sta. 116+20
PVI El. 743.65
600 V.C.
+1.33% -1.37%

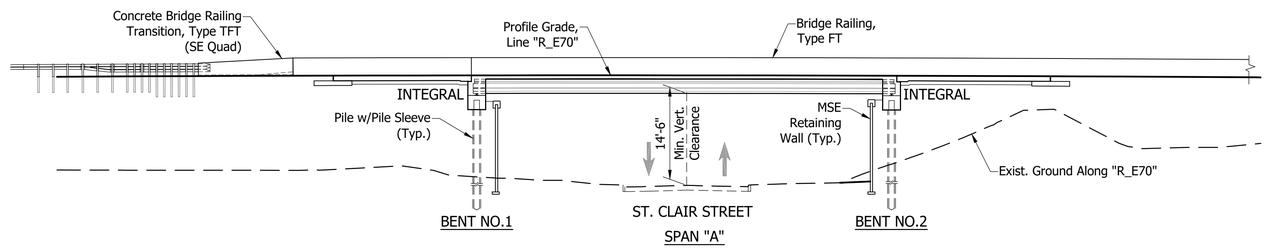

ELEVATION

Scale: 1/16" = 1'-0"

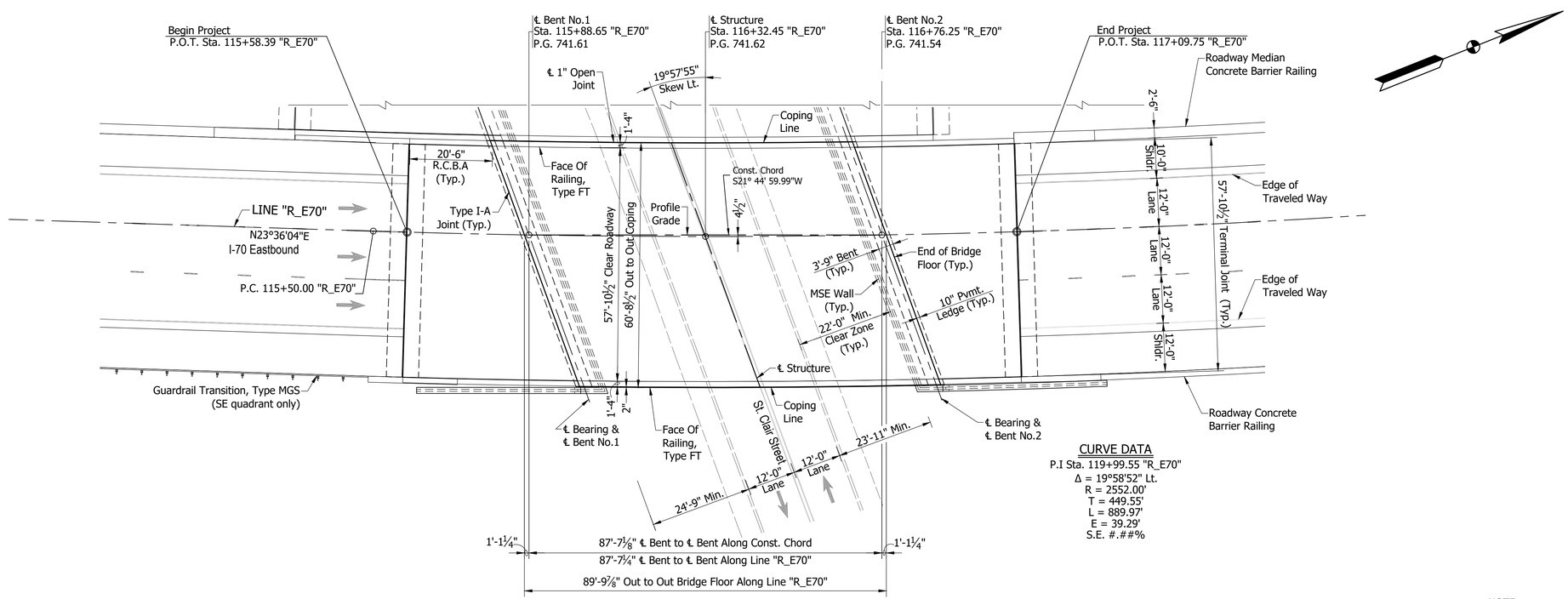

CURVE DATA
P.I Sta. 119+99.55 "R_E70"
Δ = 19°58'52" Lt.
R = 2552.00'
T = 449.55'
L = 889.97'
E = 39.29'
S.E. #.##%

PLAN

Scale: 1/16" = 1'-0"

NOTE:
See Sheet 6 For Typical Section

PRESTRESSED COMPOSITE CONCRETE BULB-TEE BEAM BRIDGE
1 SPAN: 87'-7 1/4"
57'-10 1/2" CLEAR ROADWAY; SKEW 19°57'55" LT.
I-70 E.B. OVER ST. CLAIR STREET
MARION COUNTY

RECOMMENDED FOR APPROVAL: DESIGN ENGINEER #/#/# DATE	INDIANA DEPARTMENT OF TRANSPORTATION	HORIZONTAL SCALE: As Noted	BRIDGE FILE: 170-111-10616 EBL
		VERTICAL SCALE: N/A	DESIGNATION: 1901889
DESIGNED: B. WRIGHT DRAWN: L. KIRSCH	GENERAL PLAN - PLAN & ELEVATION VIEWS	SURVEY BOOK: ELECTRONIC	SHEET: 5 OF 15
CHECKED: M. EICHENAUER CHECKED: B. WRIGHT		CONTRACT: B-36910	PROJECT: 1600808

BFS NO. 6412

\\bfsnt241\Jobs5\641200.0000\ProjDevelopment\Design\Drawings\BRIDGES\07 OVER ST CLAIR STREET\Structure 1901889\1901889_S_BR_PLN01.dwg Dylan Piercefield Plot:2/24/2020 6:35 AM Save:2/20/2020 4:52 PM

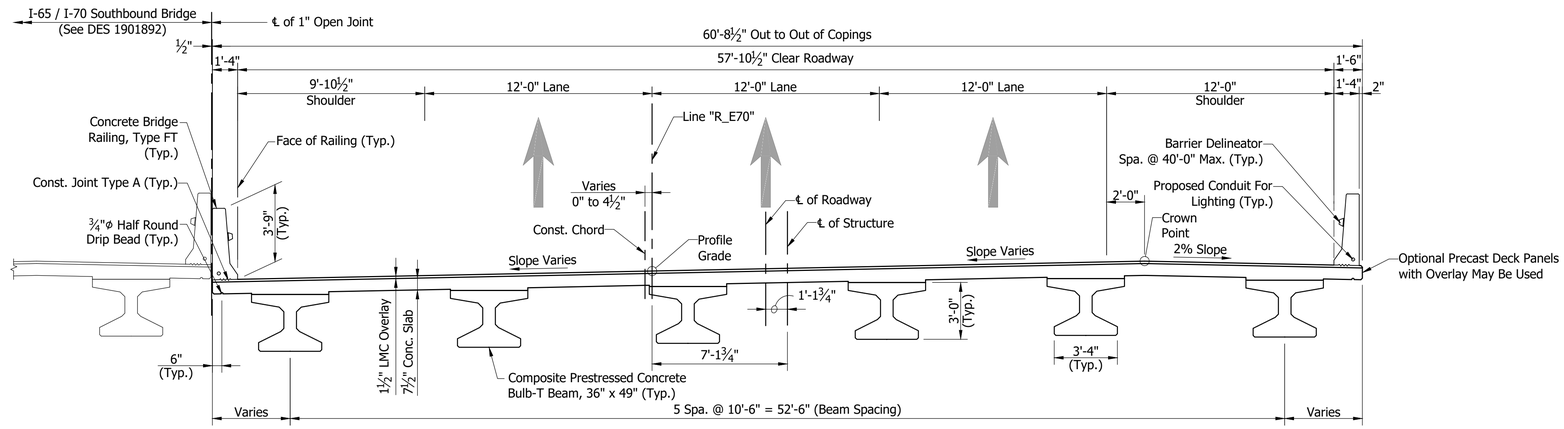

TYPICAL SECTION

Scale: 1/4"= 1'-0"

GENERAL NOTES

The existing structure shall be removed.

Reinforcing bars covering shall be 3 ½" in top and 1" min. in bottom of floor slabs and 3" in footings except bottom steel which shall be 4", and 2" in all other parts, unless noted.

Concrete in floor slab, and diaphragms, barriers, and end bents shall be an alternate Class C in accordance with the Technical Provisions.

Reinforcing Bars in Deck, Barrier, and End Bent Diaphragm Extending into the Deck shall be Stainless Steel. Reinforcing Bars in End Bent Diaphragm not Extending into the Deck and in the Cap shall be Epoxy Coated.

All exposed faces of the MSE walls and reinforced concrete bridge approach slabs shall receive surface seal.

See Bridge Aesthetic Plan for Architectural Details.

DESIGN DATA

LIVE LOAD:

Superstructure and Substructure Designed for HL-93 loading in accordance with the AASHTO LRFD Bridge Design Specifications, 8th Edition, 2017 and its subsequent revisions.

DEAD LOAD:

Designed for Actual Dead Load plus 35 psf of future wearing surface, and 15 psf for SIP Metal Deck Forms.

FLOOR SLAB:

Slab designed with a 7 ½" structural depth and a 1 ½" very early strength LMC wearing surface.

DESIGN STRESSES

CONSTRUCTION LOADING:

The exterior girder has been checked for strength, deflection, and overturning using the construction loads shown below. Cantilever overhang brackets were assumed for support of the deck overhang past the edge of the exterior beam. The finishing machine was assumed to be supported 6 in. outside the vertical coping form. The top overhang brackets were assumed to be located 6 in. past the edge of the vertical coping form. The bottom overhang brackets were assumed to be braced against the intersection of the girder bottom flange and web.

DECK FALSEWORK LOADS:

Designed for 15 psf for permanent metal stay-in-place deck forms, removable deck forms, and 2 ft. exterior walkway.

CONSTRUCTION LIVE LOAD:

Designed for 20 psf extending 2 ft. past the edge of coping and 75 lb/ft vertical force applied at a distance of 6 in. outside the face of coping over a 30 foot length of the deck centered with the finishing machine.

FINISHING-MACHINE LOAD:

4500 lb distributed over 10 ft. along the coping.

WIND LOAD:

Designed for 70 mph horizontal wind load in accordance with LRFD 3.8.1.

ULTIMATE DESIGN STRENGTHS:

Class "A" Concrete	f'c = 3,500 p.s.i.
Class "B" Concrete	f'c = 3,000 p.s.i.
Class "C" Concrete	f'c = 4,000 p.s.i.
Reinforcing Steel (Grade 60)	Fy = 60,000 p.s.i. (barrier)
	Fy = 75,000 p.s.i. (deck)
	Fy = 75,000 p.s.i. (all other locations)

SEISMIC DESIGN DATA:

Seismic Site Class	C
PGA (g)	0.051
S_s (g)	0.12
S_1 (g)	0.051
S_{D1} (g)	0.086
Seismic Design Category	A

PRESTRESSED COMPOSITE CONCRETE BULB-TEE BEAM BRIDGE
1 SPAN: 87'-7 1/4"
57'-10 1/2" CLEAR ROADWAY; SKEW 19°57'55" LT.
I-70 E.B. OVER ST. CLAIR STREET
MARION COUNTY

RECOMMENDED FOR APPROVAL: _____ DESIGN ENGINEER #/#/# DATE

DESIGNED: B. WRIGHT DRAWN: L. KIRSCH
CHECKED: M. EICHENAUER CHECKED: B. WRIGHT

INDIANA
DEPARTMENT OF TRANSPORTATION

GENERAL PLAN - TYPICAL SECTION

HORIZONTAL SCALE	BRIDGE FILE
As Noted	I70-111-10616 EBL
VERTICAL SCALE	DESIGNATION
N/A	1901889
SURVEY BOOK	SHEET
ELECTRONIC	6 OF 15
CONTRACT	PROJECT
B-36910	1600808

BFS NO. 6412

\\bsn1241\Jobs5\641200.0000\ProjDevelopment\Design\Drawings\BRIDGES\07 OVER ST CLAIR STREET\Structure 1901889\1901889_S_BR_PLN02.dwg Dylan Piercefield Plot:2/24/2020 6:36 AM Save:2/20/2020 4:14 PM

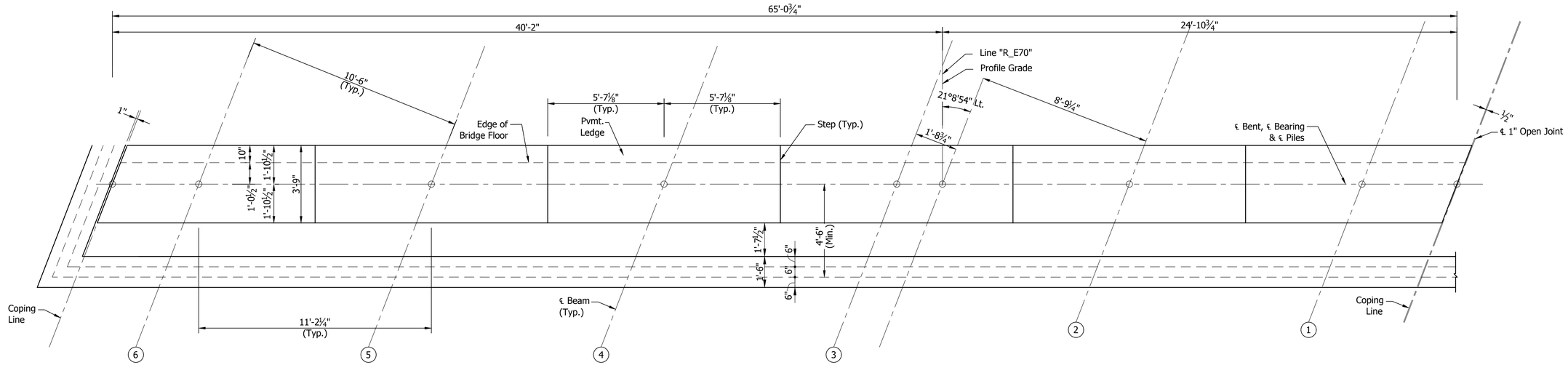

PLAN
BENT NO.1 EB

Scale: ⅜"=1'-0"

SEAT ELEVATIONS						
Beam No.	6	5	4	3	2	1
Bent No.1	736.92	737.10	736.76	736.42	736.07	735.73

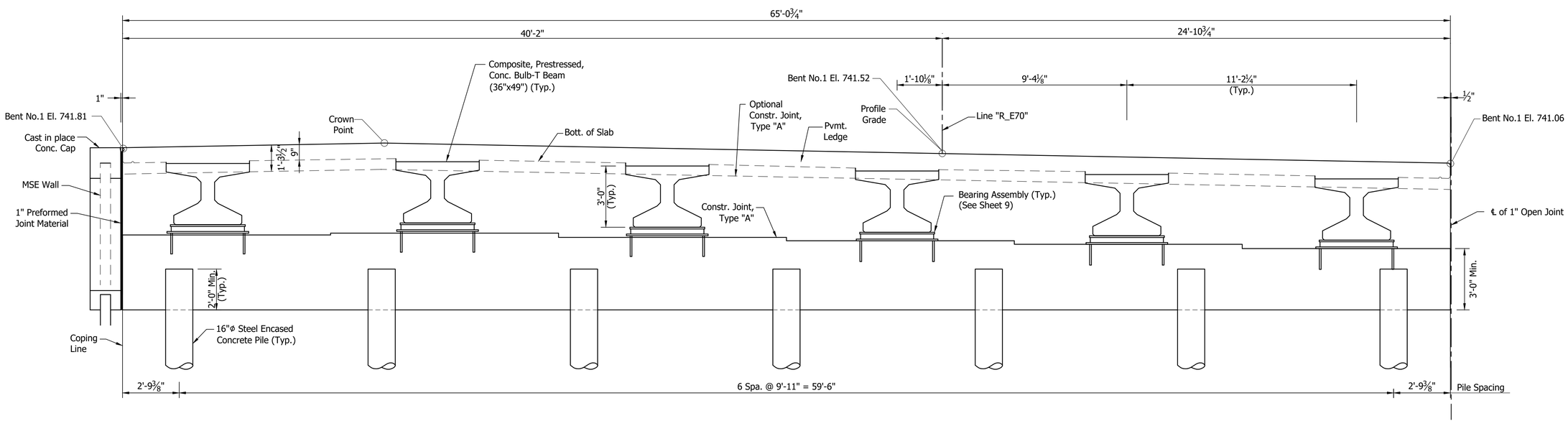

SECTION ALONG ℄ BENT

Scale: ⅜"=1'-0"

RECOMMENDED FOR APPROVAL: DESIGN ENGINEER #/#/# DATE	INDIANA DEPARTMENT OF TRANSPORTATION	HORIZONTAL SCALE: As Noted	BRIDGE FILE: 170-111-10616 EBL
		VERTICAL SCALE: N/A	DESIGNATION: 1901889
DESIGNED: V. SATHIRAJU DRAWN: K. COFFMAN	BENT NO.1 DETAILS	SURVEY BOOK	SHEET
CHECKED: B. WRIGHT CHECKED: B. WRIGHT		ELECTRONIC	7 OF 15
		CONTRACT	PROJECT
		B-36910	1600808

BFS NO. 6412

\\bfsn1241\jobs5\641200.0000\Proj\Development\Design\Drawings\BRIDGES\07_OVER_ST_CLAIR_STREET\Structure_1901889\1901889_S_BR_BNT01 - BENT DETAIL.dwg Dylan Piercefield Plot: 2/24/2020 6:36 AM Save: 2/18/2020 1:39 PM

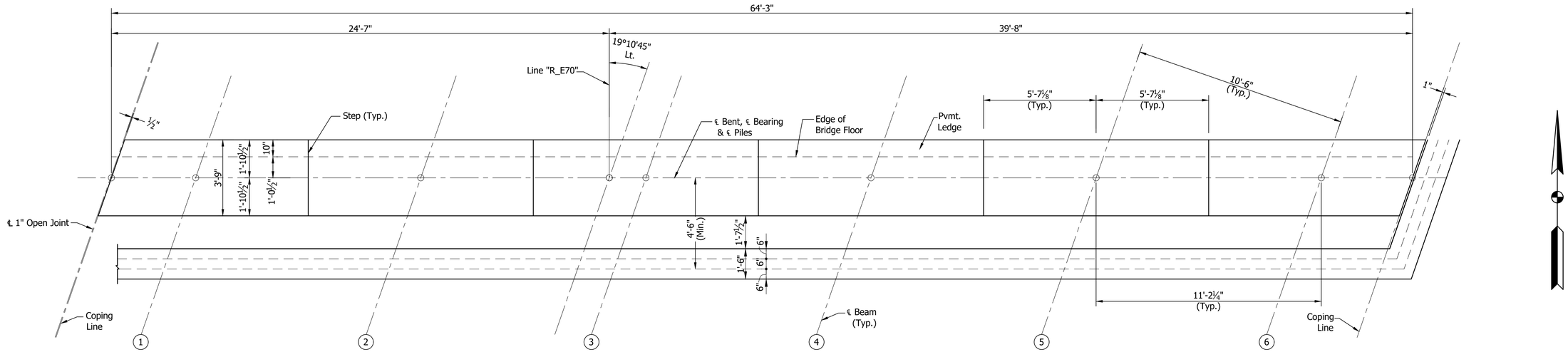

PLAN
BENT NO.2 EB
Scale: ⅜"=1'-0"

SEAT ELEVATIONS						
Beam No.	6	5	4	3	2	1
Bent No.2	736.85	737.90	736.57	736.25	735.92	735.59

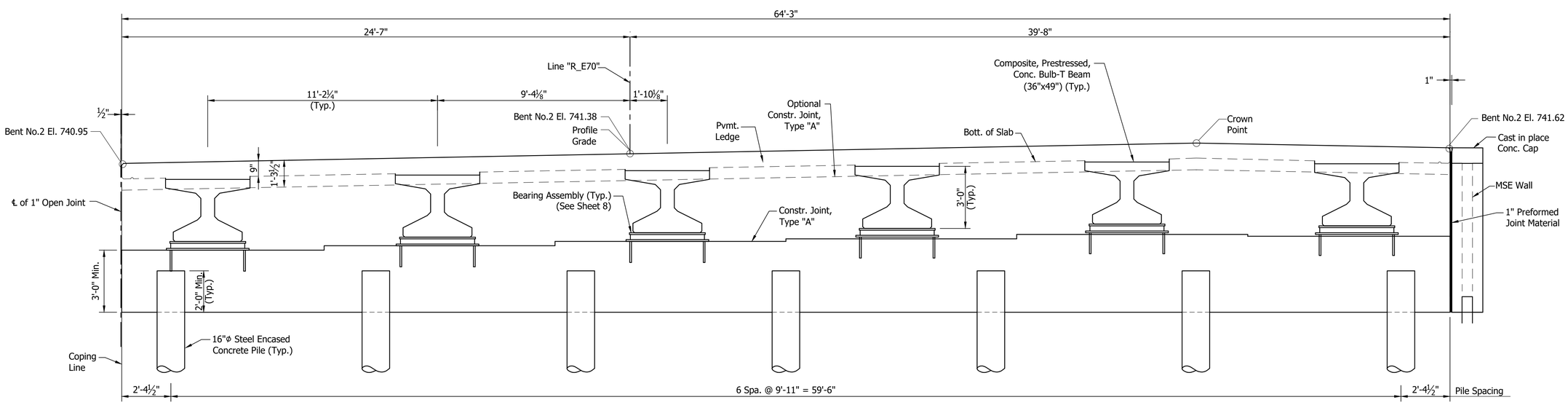

SECTION ALONG ℄ BENT
Scale: ⅜"=1'-0"

RECOMMENDED FOR APPROVAL: DESIGN ENGINEER — DATE #/#/#	INDIANA DEPARTMENT OF TRANSPORTATION	HORIZONTAL SCALE: As Noted	BRIDGE FILE: I70-111-10616 EBL
		VERTICAL SCALE: N/A	DESIGNATION: 1901889
DESIGNED: V. SATHIRAJU DRAWN: K. COFFMAN	BENT NO.2 DETAILS	SURVEY BOOK	SHEET 8 OF 15
CHECKED: B. WRIGHT CHECKED: B. WRIGHT		ELECTRONIC	
		CONTRACT: B-36910	PROJECT: 1600808

BFS NO. 6412

\\bsn1241\jobs5\641200.0000\Proj\Development\Design\Drawings\BRIDGES\07 OVER ST CLAIR STREET\Structure 1901889\1901889_S_BR_BNT02.dwg Dylan Piercefield Plot:2/24/2020 6:36 AM Save:1/15/2020 9:53 AM

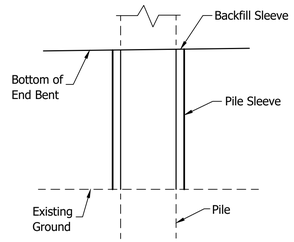

PILE SLEEVE DETAIL

Not to Scale

⊛ As an alternate a ⅞"Φx1'-3" Long Headed Automatic Welded Stud may be used.

⊗ Setting Tolerance of Bottom Plate-Level with to not more than 1/16" below top of Concrete.

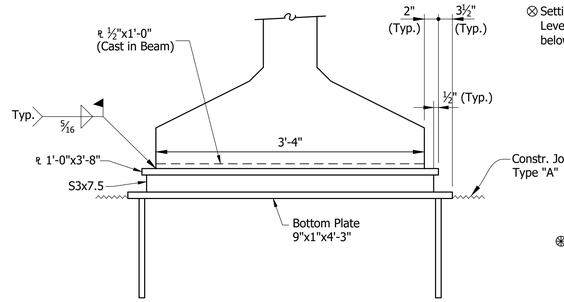

ELEVATION

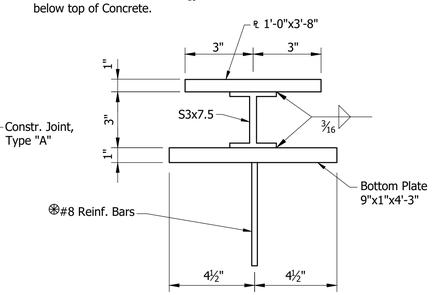

SECTION

BEARING ASSEMBLY

Not to Scale

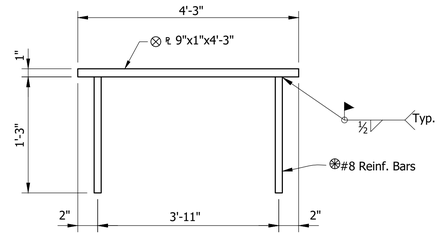

BOTTOM PLATE DETAIL

Not to Scale

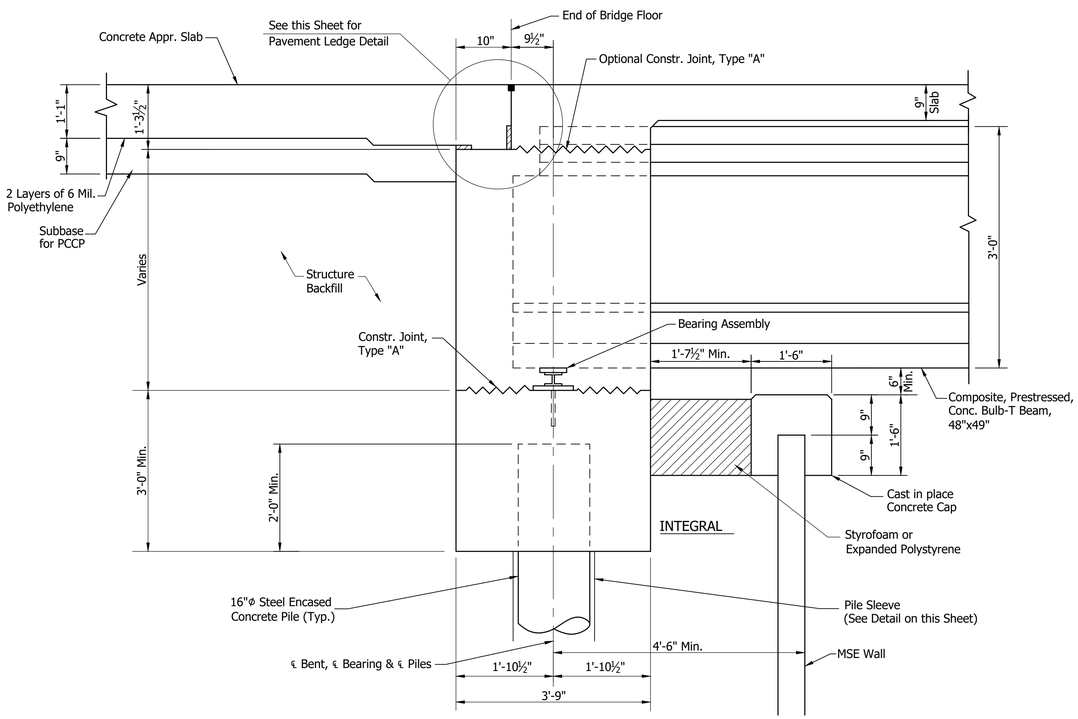

SECTION "B-B"

Not to Scale

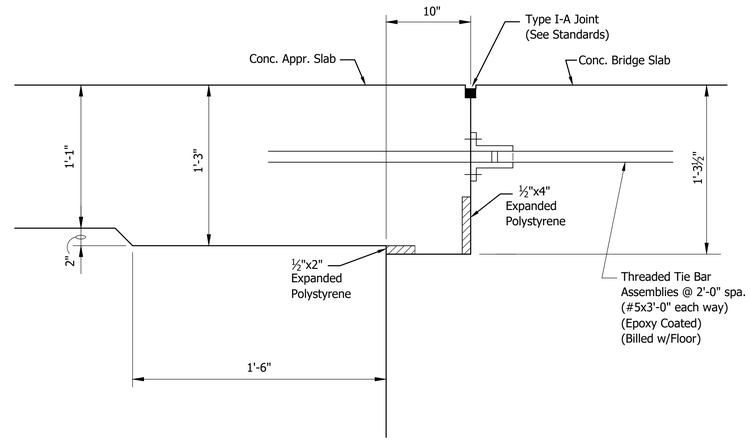

PAVEMENT LEDGE DETAIL

Not to Scale

RECOMMENDED FOR APPROVAL: DESIGN ENGINEER DATE	INDIANA DEPARTMENT OF TRANSPORTATION	HORIZONTAL SCALE: N/A	BRIDGE FILE: I70-111-10616 EBL	
		VERTICAL SCALE: N/A	DESIGNATION: 1901889	
DESIGNED: V. SATHIRAJU DRAWN: K. COFFMAN	BENTS NO. 1 AND NO. 2 DETAILS	SURVEY BOOK: ELECTRONIC	SHEET: 9 OF 15	6412
CHECKED: B. WRIGHT CHECKED: B. WRIGHT		CONTRACT: B-36910	PROJECT: 1600808	BFS NO.

\\bfsn1241\jobs5\641200.0000\ProjDevelopment\Design\Drawings\BRIDGES\07_OVER_ST_CLAIR_STREET\Structure_1901889\1901863_S_BR_BNT.dwg Dylan Piercefield Plot:2/24/2020 6:36 AM Save:2/19/2020 2:32 PM

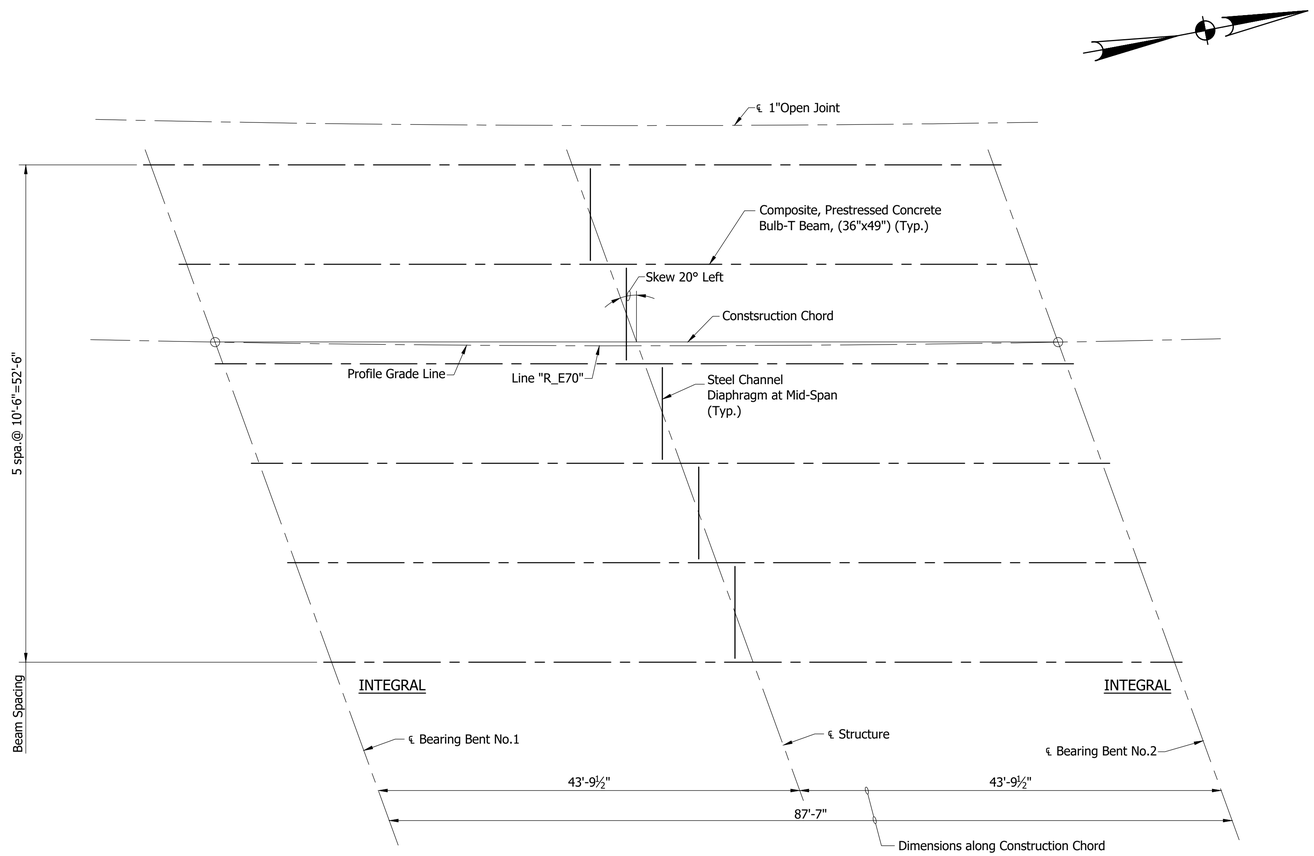

BEAM ERECTION PLAN

Scale: 1/8" = 1'-0"

RECOMMENDED FOR APPROVAL: DESIGN ENGINEER DATE	INDIANA DEPARTMENT OF TRANSPORTATION	HORIZONTAL SCALE: As Noted	BRIDGE FILE: I70-111-10616 EBL	
		VERTICAL SCALE: N/A	DESIGNATION: 1901889	
DESIGNED: V. SATHIRAJU DRAWN: D. SHEETZ	FRAMING PLAN	SURVEY BOOK: ELECTRONIC	SHEET: 10 OF 15	
CHECKED: B. WRIGHT CHECKED: B. WRIGHT		CONTRACT: B-36910	PROJECT: 1600808	

BFS NO. 6412

\\bfsn1241\jobs5\641200.0000\ProjDevelopment\Design\Drawings\BRIDGES\07 OVER ST CLAIR STREET\Structure 1901889\1901889_S_BR_FRM01.dwg Dylan Piercefield Plot: 2/24/2020 6:36 AM Save: 2/12/2020 11:03 AM

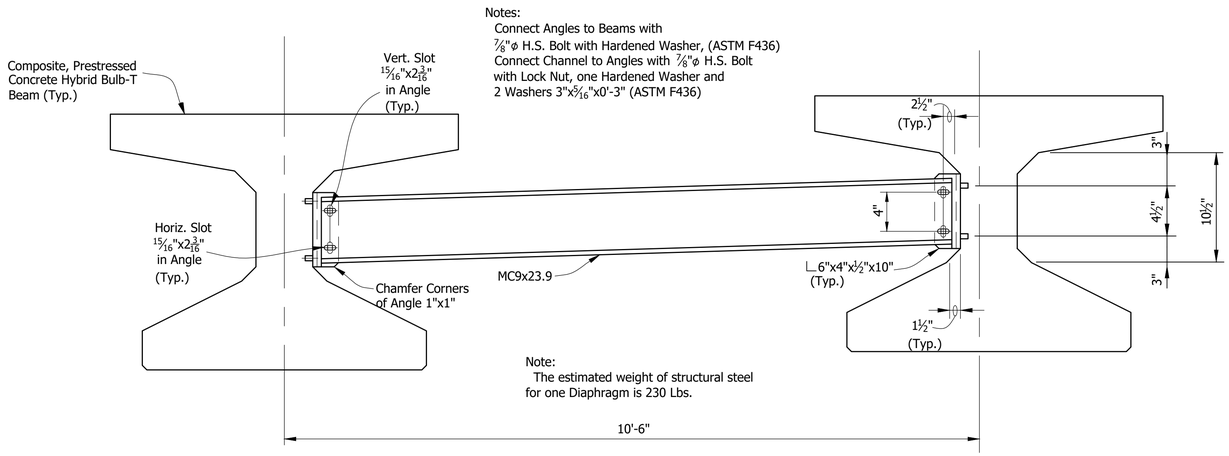

ELEVATION

Not to Scale

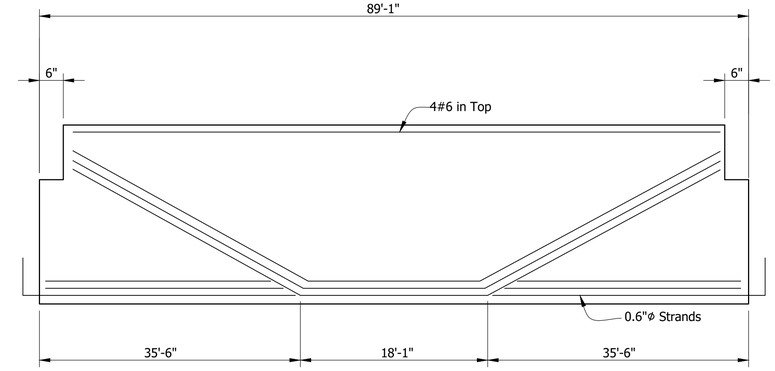

BEAM ELEVATION

SPAN "A"

SHOWING DRAPED STRANDS

Not to Scale

✳ Denotes Epoxy Coated

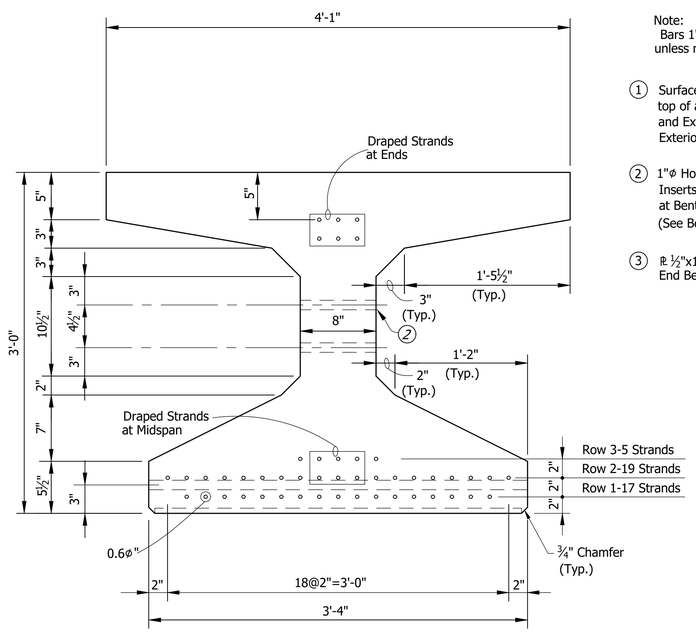

SECTION SHOWING STRANDS

Note:
Bars 1" Clear
unless noted.

1. Surface Seal req'd on top of all Beams and Exterior Face of Exterior Beams
2. 1"ø Holes or 3/4"ø Inserts for Dowels at Bent or Pier. (See Beam Plans)
3. ℞ 1/2"x12"x3'-2 1/2" at End Bent Ends only

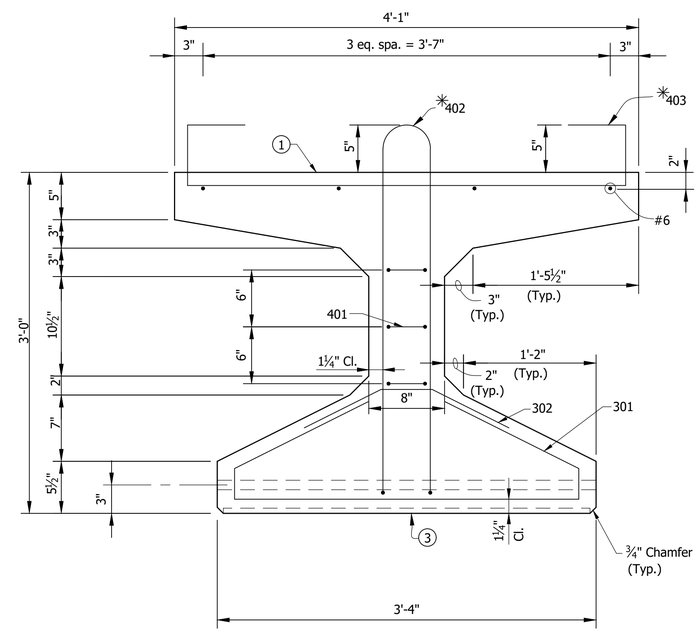

SECTION SHOWING REINFORCING

BEAM SECTIONS

Not to Scale

RECOMMENDED FOR APPROVAL: _____ DESIGN ENGINEER DATE	INDIANA DEPARTMENT OF TRANSPORTATION	HORIZONTAL SCALE: As Noted	BRIDGE FILE: I70-111-10616 EBL
		VERTICAL SCALE: N/A	DESIGNATION: 1901889
DESIGNED: J. GOULD DRAWN: D. PIERCEFIELD	BEAM DETAILS	SURVEY BOOK: ELECTRONIC	SHEET: 11 OF 15
CHECKED: B. WRIGHT CHECKED: B. WRIGHT		CONTRACT: B-36910	PROJECT: 1600808

BFS NO. 6412

\\bfsn\241\jobs5\641200.0000\Pro_Development\Design\Drawings\BRIDGES\07 OVER ST CLAIR STREET\Structure 1901889\1901889_S_BR_BMD01.dwg Dylan Piercefield Plot:2/24/2020 6:36 AM Save:2/12/2020 9:54 AM

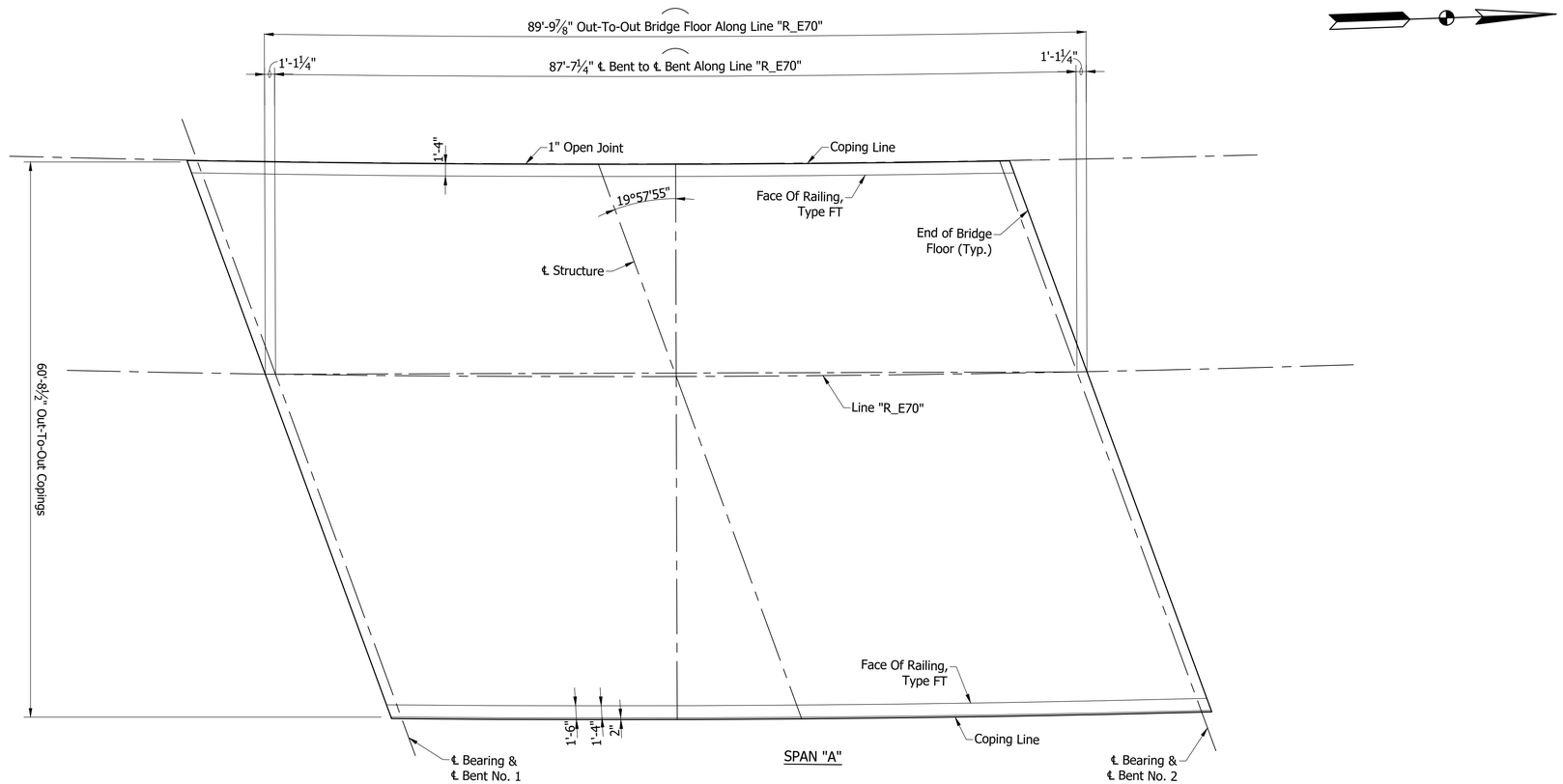

FLOOR PLAN

Scale: 1/8" = 1'-0"

NOTE:
See Sheet ___ For _____

RECOMMENDED FOR APPROVAL: _____ DESIGN ENGINEER _____ DATE	INDIANA DEPARTMENT OF TRANSPORTATION	HORIZONTAL SCALE: As Noted	BRIDGE FILE: I70-111-10616 EBL	
		VERTICAL SCALE: N/A	DESIGNATION: 1901889	
DESIGNED: V. SATHIRAJU DRAWN: D. PIERCEFIELD	FLOOR DETAILS	SURVEY BOOK: ELECTRONIC	SHEET: 12 OF 15	
CHECKED: B. WRIGHT CHECKED: B. WRIGHT		CONTRACT: B-36910	PROJECT: 1600808	

BFS NO. 6412

\\bfsn1241\jobs5\641200.0000\Proj\Development\Design\Drawings\BRIDGES\07 OVER ST CLAIR STREET\Structure 1901889\1901889_S_BR_FLR01.dwg Dylan Piercefield Plot: 2/24/2020 6:36 AM Save: 2/5/2020 8:41 AM

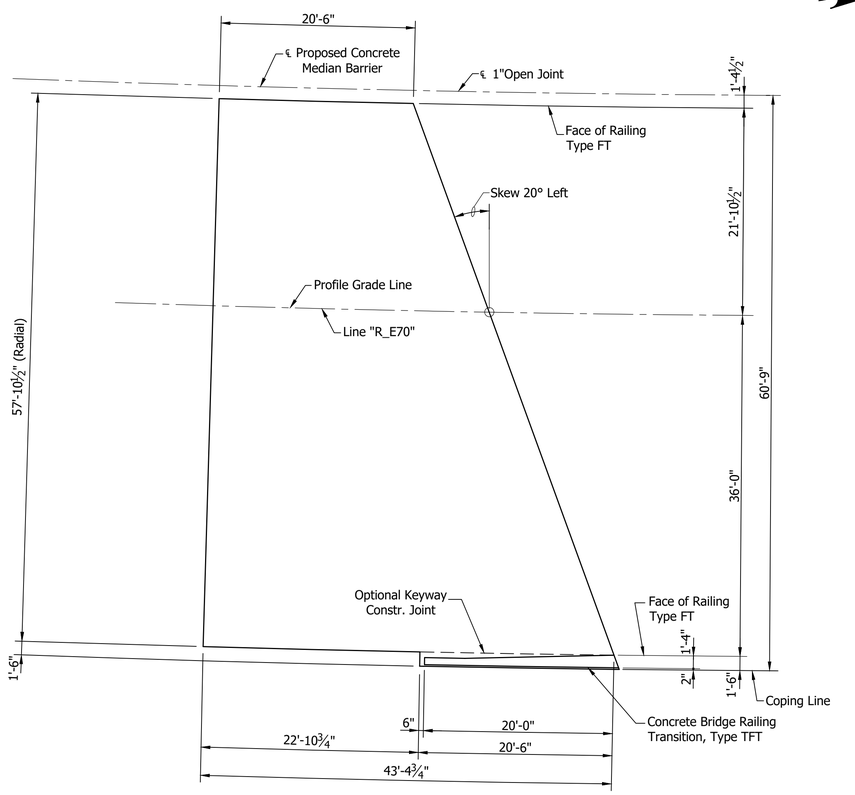

PLAN
SOUTH SLAB
Scale: ⅛"=1'-0"

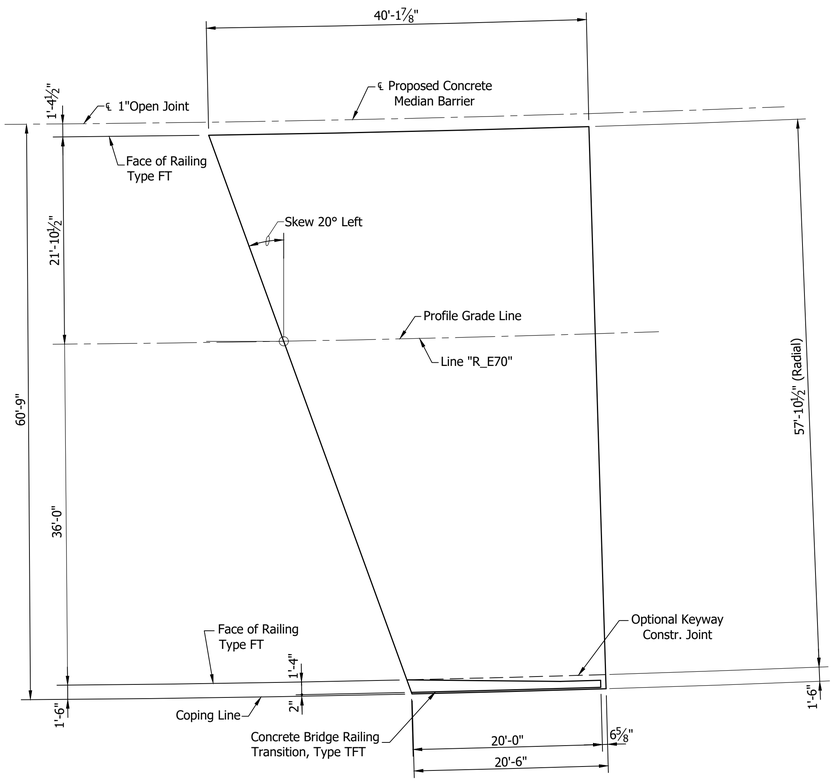

PLAN
NORTH SLAB
Scale: ⅛"=1'-0"

RECOMMENDED FOR APPROVAL: DESIGN ENGINEER DATE	INDIANA DEPARTMENT OF TRANSPORTATION	HORIZONTAL SCALE: As Noted	BRIDGE FILE: I70-111-10616 EBL	
		VERTICAL SCALE: N/A	DESIGNATION: 1901889	
DESIGNED: D. SHEETZ DRAWN: D. SHEETZ	APPROACH SLAB	SURVEY BOOK: ELECTRONIC	SHEET: 13 OF 15	
CHECKED: B. WRIGHT CHECKED: B. WRIGHT		CONTRACT: B-36910	PROJECT: 1600808	

BFS NO. 6412

\\bfsn1241\jobs5\641200.0000\ProjDevelopment\Design\Drawings\BRIDGES\07 OVER ST CLAIR STREET\Structure 1901889\1901889_S_BR_AP501.dwg Dylan Piercefield Plot: 2/24/2020 6:37 AM Save: 2/3/2020 8:29 AM

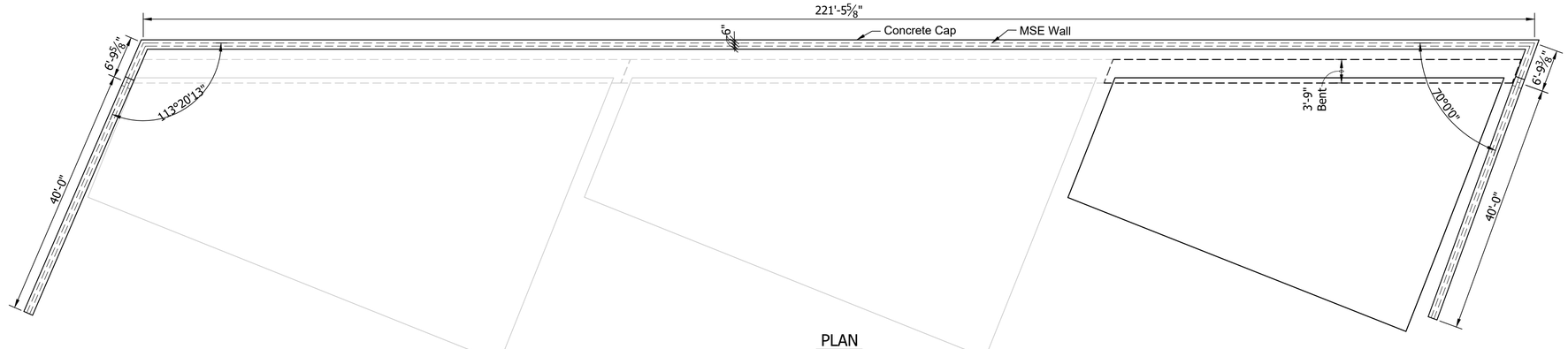

PLAN
MSE WALL NO. 1 (SOUTHERN)
Scale: 3/32"=1'-0"

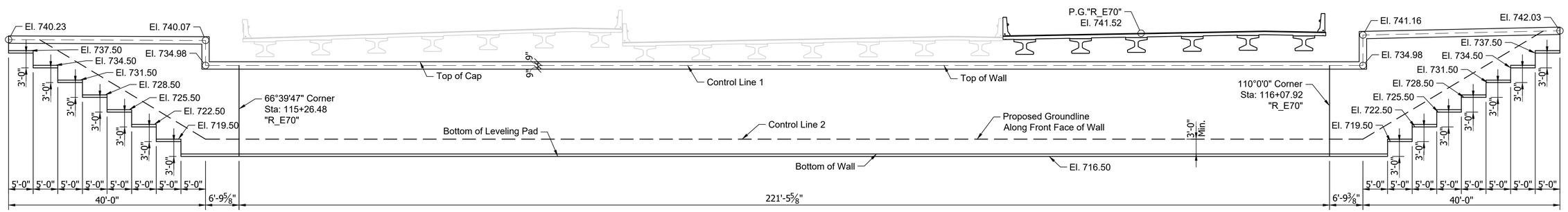

ELEVATION
MSE WALL NO. 1 (SOUTHERN)
Scale: 3/32"=1'-0"

NOTE:
Elevation Looking At Back Face of Wall

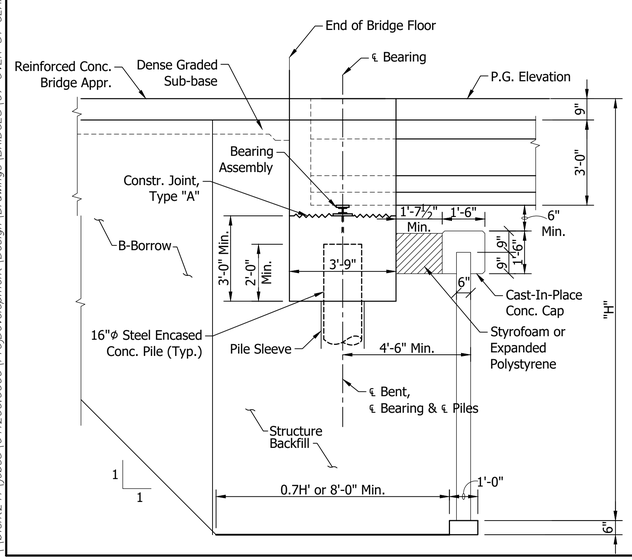

SECTION
MSE WALL NO. 1
Scale: 3/8"=1'-0"

RECOMMENDED FOR APPROVAL: DESIGN ENGINEER DATE	INDIANA DEPARTMENT OF TRANSPORTATION	HORIZONTAL SCALE: AS NOTED	BRIDGE FILE: I70-111-10616 EBL	6412
		VERTICAL SCALE: AS NOTED	DESIGNATION: 1901889	
DESIGNED: B. WRIGHT DRAWN: D. PIERCEFIELD	WALL LAYOUT	SURVEY BOOK	SHEET	BFS NO.
CHECKED: M. EICHENAUER CHECKED: B. WRIGHT		ELECTRONIC	14 OF 15	
		CONTRACT: B-36910	PROJECT: 1600808	

\\bfsn1241\Jobs5\641200.0000\Proj\Development\Design\Drawings\BRIDGES\07_OVER_ST_CLAIR_STREET\Structure_1901889\1901889_S_BR_WL01.dwg Dylan Piercefield Plot: 2/24/2020 6:37 AM Save: 2/19/2020 1:22 PM

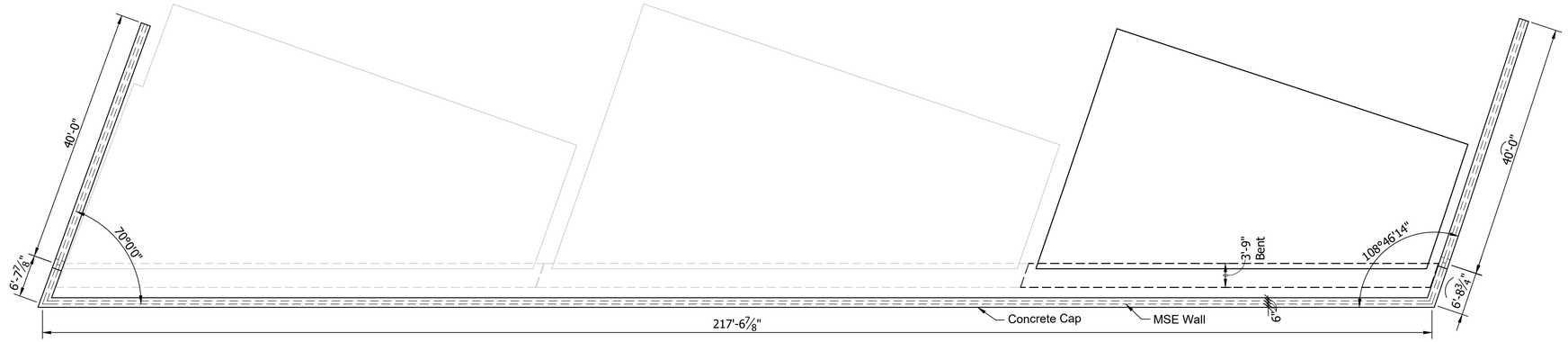

PLAN
MSE WALL NO. 2 (NORTHERN)
Scale: 3/32"=1'-0"

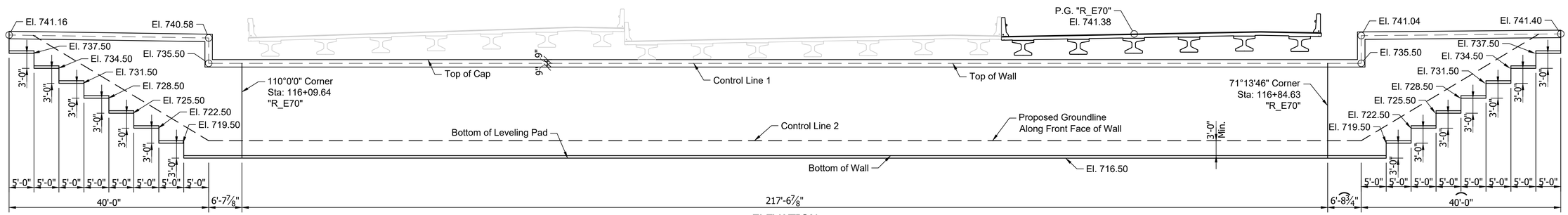

ELEVATION
MSE WALL NO. 2 (NORTHERN)
Scale: 3/32"=1'-0"

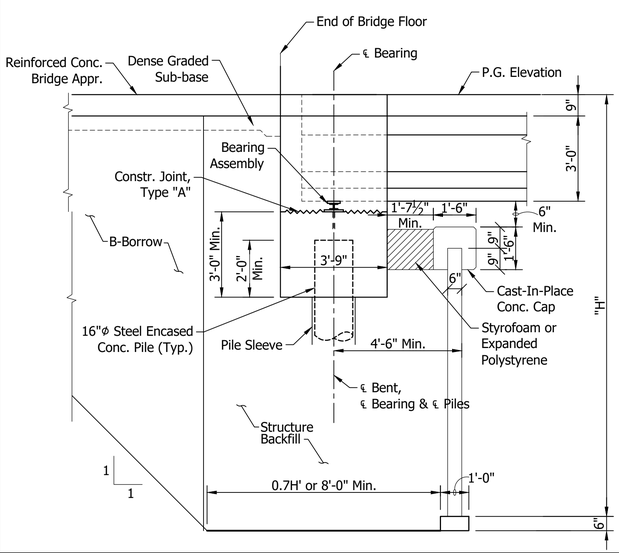

SECTION
MSE WALL NO. 2
Scale: 3/8"=1'-0"

	RECOMMENDED FOR APPROVAL: DESIGN ENGINEER DATE	INDIANA DEPARTMENT OF TRANSPORTATION	HORIZONTAL SCALE: AS NOTED	BRIDGE FILE: I70-111-10616 EBL
			VERTICAL SCALE: AS NOTED	DESIGNATION: 1901889
	DESIGNED: B. WRIGHT DRAWN: D. PIERCEFIELD	WALL LAYOUT	SURVEY BOOK	SHEET
	CHECKED: M. EICHENAUER CHECKED: B. WRIGHT		ELECTRONIC	15 OF 15
			CONTRACT: B-36910	PROJECT: 1600808

6412
BFS NO.

\\bfsnt241\jobs5\641200.0000\ProDevelopment\Design\Drawings\BRIDGES\07 OVER ST CLAIR STREET\Structure 1901889\1901889_S_BR_WL02.dwg Dylan Piercefield Plot: 2/24/2020 6:37 AM Save: 2/19/2020 2:09 PM