June 13, 2019

SOLID STATE BALLASTED LUMINAIRES

Specification Reference: 807.13 & 920.01(d) SM Material Code:

HIGH MAST- Mounting Heights ≥ 100 ft with Symmetric Light Distribution

Source Code	Manufacturer, Model and Version	Approval Number	Comments
	1. General Electric, Evolve ERHM Gen 2- 02 0 80 VW 7 40 N A 4B GRAY		
	2. Acuity Brands (Holophane), HMLED3 PK3 40K MVOLT G AW AO P7 PSC		
	3. Philips, High Focus HFL 184L 1050NW G1 5M UNN DD GY3		

HIGH MAST- Mounting Heights ≥ 100 ft with Asymmetric Light Distribution

Source Code	Manufacturer, Model and Version	Approval Number	Comments
	1. General Electric, Evolve ERHM Gen 2- 02 0 70 C3 7 40 N A 4B GRAY		
	2. Acuity Brands (Holophane), HMLED3 PK4 40K MVOLT G M AO P7 PSC		

HIGH MAST- Mounting Heights 60 to 95 ft with Symmetric Light Distribution

Source Code	Manufacturer, Model and Version	Approval Number	Comments
	1. General Electric, Evolve ERHM Gen 2- 02 0 60 VW 7 40 N A 4B GRAY		
	2. Acuity Brands (Holophane), HMLED3 PK3 40K MVOLT G AW AO P7 PSC		
	3. Philips, High Focus HFL 184L 1050NW G1 5M UNN DD GY3		

HIGH MAST- Mounting Heights 60 to 95 ft with Asymmetric Light Distribution

Source Code	Manufacturer, Model and Version	Approval Number	Comments
	1. General Electric, Evolve ERHM Gen 2- 02 0 60 C3 7 40 N A 4B GRAY		
	2. Acuity Brands (Holophane), HMLED3 PK4 40K MVOLT G M AO P7 PSC		

June 13, 2019

SOLID STATE BALLASTED LUMINAIRES (2 of 6)

Specification Reference: 807.13 & 920.01(d) SM Material Code:

HIGH LUMEN – Standard (non-enhanced) Output with Type II Light Distribution

Source Code	Manufacturer, Model and Version	Approval Number	Comments
	1. Acuity Brands (American Electric Lighting), Autobahn ATBL E MVOLT R2 4B NL P7 SH		
	2. Eaton (Cooper), Navion; NVN AE 04 D U T2R 10K 4N7 AP		
	3. General Electric, Evolve ERL2 0 23 B3 40 D GRAY		
	4. Philips, Road Focus RFL 215 W96 LED 4K T R2M UNIV DMG RCD7 SP2 GY3		
	5. PolyBrite, SL4240 T3M 40K GR		

HIGH LUMEN – Standard (non-enhanced) Output with Type III Light Distribution

Source Code	Manufacturer, Model and Version	Approval Number	Comments
	1. Acuity Brands (American Electric Lighting), Autobahn ATBL E MVOLT R3 4B NL P7 SH		
	2. Eaton (Cooper), Navion NVN AE 04 D U T3R 10K 4N7 AP		
	3. General Electric, Evolve ERL2- 0 23 C3 40 D GRAY		
	4. Philips, Road Focus RFL 215 W96 LED 4K T R3M UNIV DMG RCD7 SP2 GY3		
	5. PolyBrite, SL4240 T3M 40K GR		

*HIGH LUMEN – Enhanced Output with Type II Light Distribution

Source Code	Manufacturer, Model and Version	Approval Number	Comments
	1. Acuity Brands (American Electric Lighting), Autobahn ATBL E MVOLT R2 4B NL P7 SH		
	2. Eaton (Cooper), Navion; NVN AE 06 D U T2R 10K 4N7 AP		
	3. General Electric, Evolve ERL2- 0 28 B3 40 D GRAY		
	4. Philips, Road Focus RFL 241 W112 LED 4K T R2M UNIV DMG RCD7 SP2 GY3		

*Note: Refer to this list when enhanced output is indicated by the plans

June 13, 2019

SOLID STATE BALLASTED LUMINAIRES (3 of 6)

Specification Reference: 807.13 & 920.01(d) SM Material Code:

<u>*HIGH LUMEN – Enhanced Output with Type III Light Distribution</u>

Source Code	Manufacturer, Model and Version	Approval Number	Comments
	1. Acuity Brands (American Electric Lighting), Autobahn ATBL E MVOLT R3 4B NL P7 SH		
	2. Eaton (Cooper), Navion; NVN AE 06 D U T3R 10K 4N7 AP		
	3. General Electric, Evolve ERL2- 0 28 C3 40 D GRAY		
	4. Philips, Road Focus RFL 241 W112 LED 4K T R3M UNIV DMG RCD7 SP2 GY3		

*Note: Refer to this list when enhanced output is indicated by the plans

June 13, 2019

SOLID STATE BALLASTED LUMINAIRES (4 of 6)

Specification Reference: 807.13 & 920.01(d) SM Material Code:

LOW LUMEN with Type II Light Distribution

Source Code	Manufacturer, Model and Version	Approval Number	Comments
	1. Acuity Brands (American Electric Lighting), ATBM F MVOLT R2 4B NL P7 SH		
	2. Eaton (Cooper), Verdeon VERD-G-AO2-E-U-T3-AP		
	3. General Electric, Evolve ERLH 0 14 B3 40 D GRAY		
	4. Philips, Road Focus RFM 160 W48 LED 4K T R2M UNIV DMG RCD7 SP2 GY3		
	5. PolyBrite, SL4150- T3M 40K GR		

LOW LUMEN with Type III Light Distribution

Source Code	Manufacturer, Model and Version	Approval Number	Comments
	1. Acuity Brands (American Electric Lighting), ATBM F MVOLT R3 4B NL P7 SH		
	2. Eaton (Cooper), Verdeon VERD-G-AO2-E-U-T2-AP		
	3. General Electric, Evolve ERLH 0 14 C3 40 D GRAY		
	4. Philips, Road Focus RFM 160 W48 LED 4K T R3M UNIV DMG RCD7 SP2 GY3		
	5. PolyBrite, SL4150- T3M 40K GR		

June 13, 2019

SOLID STATE BALLASTED LUMINAIRES (5 of 6)

Specification Reference: 807.13 & 920.01(d) SM Material Code:

LOW LUMEN-LOW MOUNTING HEIGHT with Type II Light Distribution

Source Code	Manufacturer, Model and Version	Approval Number	Comments
	1. Acuity Brands (American Electric Lighting), ATBM F MVOLT R2 4B NL P7 SH		
	2. Eaton (Cooper), Verdeon VERD-G-AO2-E-U-T2-AP		
	3. General Electric, Evolve ERLH 0 14 B3 40 D GRAY		
	4. Philips, Road Focus RFM 160 W48 LED 4K T R2M UNIV DMG RCD7 SP2 GY3		
	5. PolyBrite, SL4150- T3M 40K GR		

LOW LUMEN-LOW MOUNTING HEIGHT with Type III Light Distribution

Source Code	Manufacturer, Model and Version	Approval Number	Comments
	1. Acuity Brands (American Electric Lighting), ATBM F MVOLT R3 4B NL P7 SH		
	2. Eaton (Cooper), Verdeon VERD-G-AO2-E-U-T3-AP		
	3. General Electric, Evolve ERLH 0 14 C3 40 D GRAY		
	4. Philips, Road Focus RFM 160 W48 LED 4K T R3M UNIV DMG RCD7 SP2 GY3		
	5. PolyBrite, SL4150- T3M 40K GR		

June 13, 2019

SOLID STATE BALLASTED LUMINAIRES (6 of 6)

Specification Reference: 807.13 & 920.01(d) SM Material Code:

UNDERPASS

Source Code	Manufacturer, Model and Version	Approval	Comments
	1. General Electric, Evolve LED Wall Pack EWNB D4740		
	2. Philips, Gardco FX1 80 G2 W 1 RM N A 5 N N SP1		

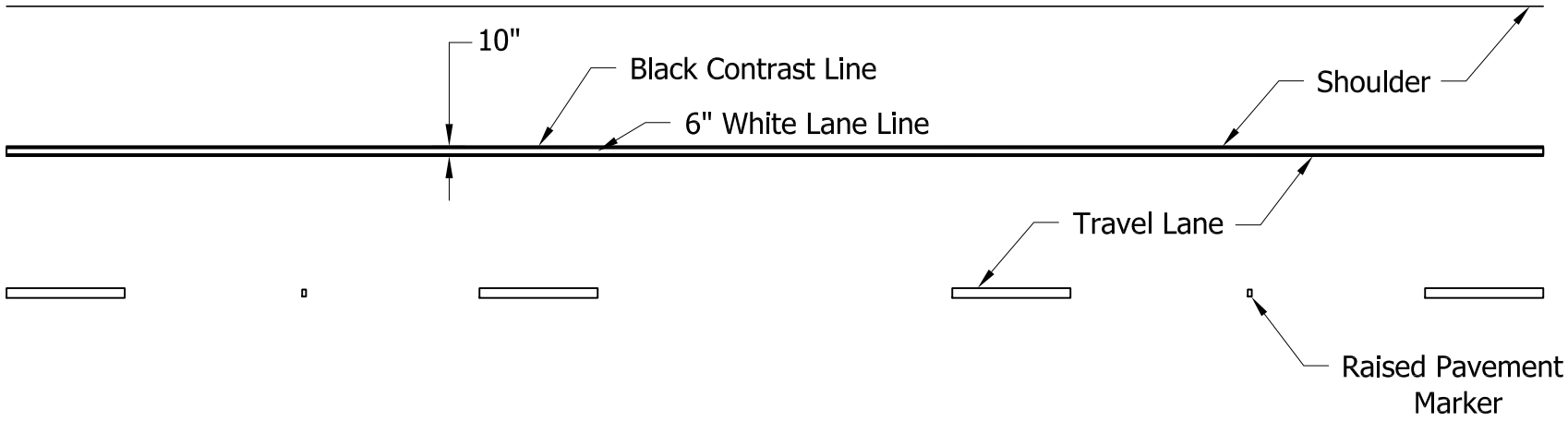

GENERAL NOTES

1. Contrast markings shall only be used on concrete pavements.
2. Contrast lane lines shall be in accordance with USP Contrast Lane Lines and Project Standards.

CONTRAST LINE DIMENSIONS		
White	Black (per side)	Total Width
6"	2"	10"

UNITED Consulting
8440 Allison Pointe Boulevard, Suite 200
Indianapolis, IN 46250
Phone 317-895-2585
www.ucindy.com

NORTH SPLIT

CONTRAST EDGE LINE DETAIL

NORTH SPLIT UPGRADES DRIVING PROGRESS

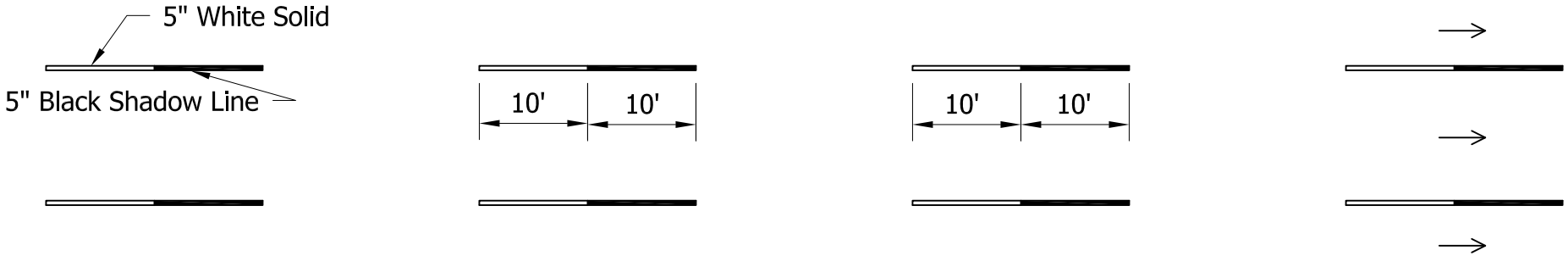

CONTRAST LANE LINE DETAIL

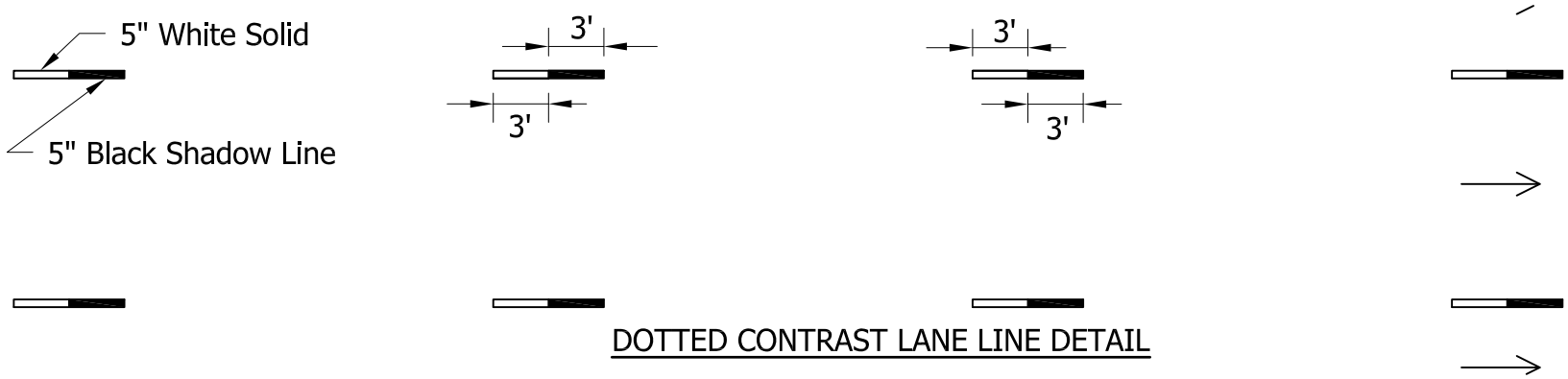

DOTTED CONTRAST LANE LINE DETAIL

WIDE DOTTED CONTRAST LANE LINE DETAIL

GENERAL NOTES

1. Concrete markings may only be used on concrete pavements.
2. Contrast lane lines shall be in accordance with USP Contrast Lane Lines and Project Standards.

UNITED Consulting
8440 Allison Pointe Boulevard, Suite 200
Indianapolis, IN 46250
Phone 317-895-2585
www.ucindy.com

NORTH SPLIT

CONTRAST LANE LINE DETAIL

NORTH SPLIT UPGRADES DRIVING PROGRESS

NOTES

1. Transition lengths in accordance with Project Standards.

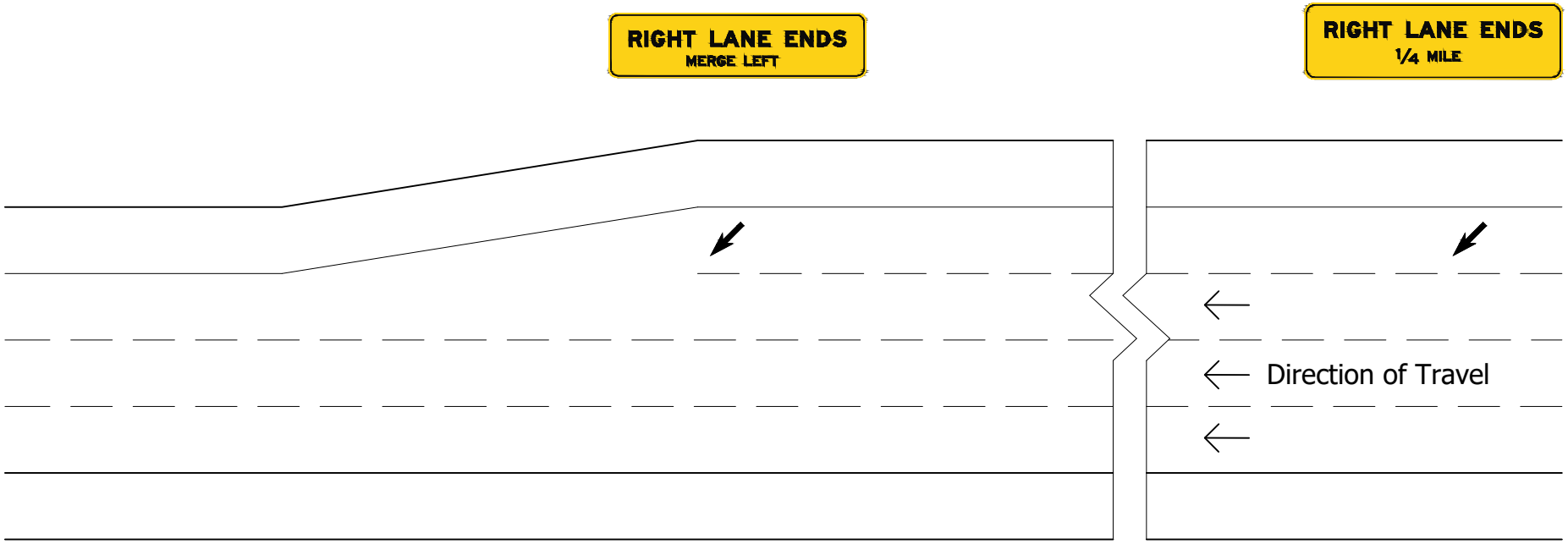

UNITED Consulting
8440 Allison Pointe Boulevard, Suite 200
Indianapolis, IN 46250
Phone 317-895-2585
www.ucindy.com

NORTH SPLIT

LANE-REDUCTION PAVEMENT MARKING DETAIL

NORTH SPLIT UPGRADES DRIVING PROGRESS

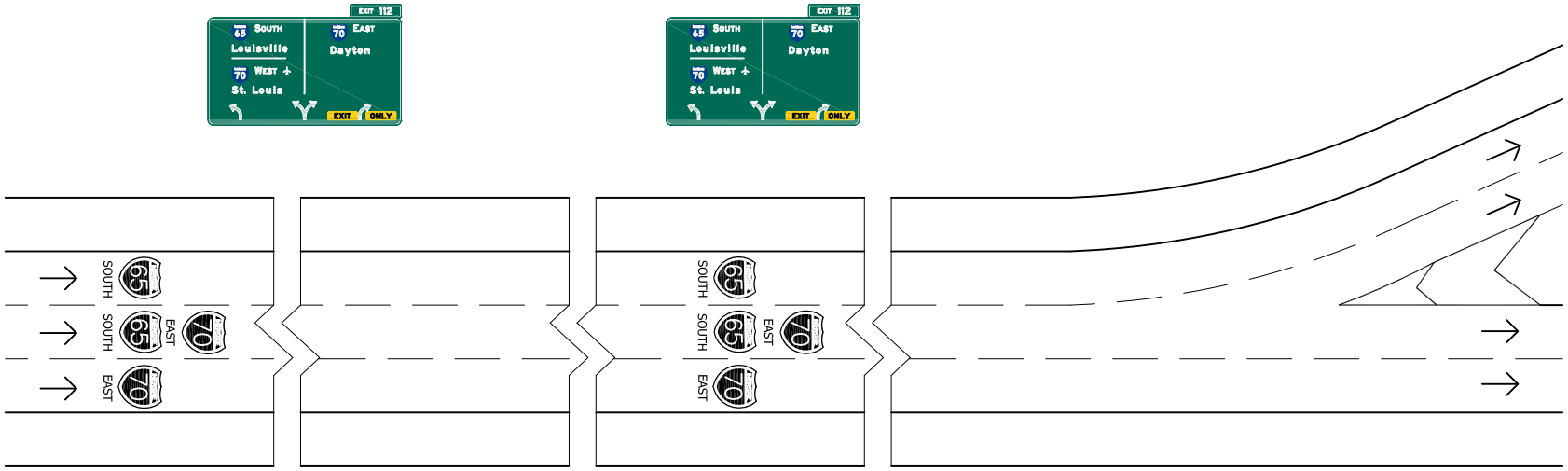

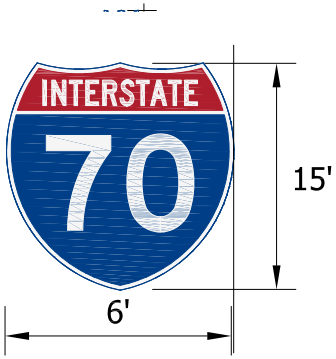

Cardinal Direction Dimensions		
Direction	Width (W)	Length (L)
North, South	9 ft.	10 ft.
East, West	8 ft.	10 ft.

NOTES:

1. Specific Arrow Per Lane Signs and pavement message markings are shown for reference only.
2. Pavement message markings shall be in accordance with USP Pavement Message Markings and Project Standards.

UNITED Consulting
8440 Allison Pointe Boulevard, Suite 200
Indianapolis, IN 46250
Phone 317-895-2585
www.ucindy.com

NORTH SPLIT

PAVEMENT MESSAGE MARKING DETAIL

NORTH SPLIT UPGRADES DRIVING PROGRESS

Design Criteria for High Mast Tower

High Mast Towers shall be designed to satisfy the AASHTO *LRFD Standard Specifications for Structural Supports for Highway Signs, Luminaires and Traffic Signals, 1st Edition, 2015* and subsequent interims.

1. Dead Load – Pole Height 60 ft. to 125 ft.

Description of Load	Weight	Effective Projected Area
Lowering Device	415 lbs.	2.70 sft.
(6) Luminaires	324 lbs.	12.0 ft.

2. Dead Load – Pole Height 130 ft. to 200 ft.

Description of Load	Weight	Effective Projected Area
Lowering Device	415 lbs.	2.70 sft.
(12) Luminaires	648 lbs.	24.0 ft.

3. Wind Load.

Mean Recurrence Interval Risk Category = High
Wind Speed (1700-Year MRI Basic Wind Speed) = 120 mph
Wind Speed (10-Year MRI Gust Wind Speed) = 76 mph
Height and Exposure Factor, K_z = 1 for height less than or equal to 33 ft.

4. Ice Load

Ice load = 3 lb/ft^2. Ice is assumed to form around the entire surface of the structure's members.

The design shall include the following INDOT specific load combination in addition to the required load combinations specified in the Table 3.4-1.

Load Combination Limit State	Description	Dead Components (DC)	Wind (W)	Ice (IC)
Extreme II	Ice	Max 1.10/ Min 0.90	0.50*	1.0
*The wind load shall be based on the 120 mph basic wind speed.				

5. Fatigue Load

Fatigue Importance Factor, $I_F = 1.0$

TYPE XI REFLECTIVE SHEETING

The Standard Specifications are revised as follows:

SECTION 919.01, BEGIN LINE 78, INSERT AS FOLLOWS:

(b) Sheeting Material

Only sheeting materials from INDOT's list of approved Sign Sheeting Materials shall be used *for Type IV through Type X sheeting*. Type IV or higher sheeting shall be used *for all ground mounted* highway signs. *Type XI sheeting shall be used for all overhead highway signs. Type XI highway sheeting shall be from INDOT's list of approved Sign Sheeting Materials or from a manufacturer that has complete test results from the National Transportation Product Evaluation Program, NTPEP. A type C certification in accordance with 916 shall be furnished for Type XI sheeting.* The sheeting type for the sign copy and border shall be the same type or higher than the sheeting type used for the background. Sheeting materials will be placed and maintained on INDOT's approved list in accordance with ITM 930.

CONTRAST LANE LINES

The Standard Specifications are revised as follows:

SECTION 808.04, BEGIN LINE 52, DELETE AND INSERT AS FOLLOWS:

808.04 Longitudinal Markings and Milled Corrugations

All longitudinal lines shall be clearly and sharply delineated, straight and true on tangent, and form a smooth curve where required. Lines shall be square at both ends, without mist, drip or spatter.

A solid line shall be continuous. A broken line shall consist of 10 ft line segments with 30 ft gaps *on HMA pavement*. *On PCCP, a broken line shall consist of 20 ft line segments with the first 10 ft white in color and the last 10 ft black in color and 20 ft gaps between segments.* A dotted line shall consist of 3 ft line segments with 9 ft gaps unless otherwise indicated on the plans *on HMA pavement*. *On PCCP, a dotted line shall consist of 6 ft line segments with the first 3 ft white in color and the last 3 ft black in color and 6 ft gaps between segments.*

SECTION 808.04, BEGIN LINE 97, DELETE AND INSERT AS FOLLOWS:

(b) Lane Lines

Lane lines shall be used to separate lanes of traffic moving in the same direction. Normal width lane line markings *on HMA pavement* shall be white in color and shall be 5 in. wide on interstates and freeways, and 4 in. wide on all other roads. *Normal width lane line markings on PCCP shall be of preformed plastic material, white and black in color and shall be 5 in. wide on interstates and freeways, and 4 in wide on all other roads*. Lane lines shall be offset 4 in. to the right of longitudinal pavement joints or divisions between traffic lanes. Wide lane lines for lane drops, route splits, or auxiliary lanes *on HMA pavement* shall be white in color and shall be 8 in. wide. *Wide lane lines for lane drops, route splits, or auxiliary lanes on PCCP shall be white and black in color and shall be 8 in. wide.* White solid lines shall be used to mark lane lines only when specified or directed.

(c) Edge Lines

Edge lines shall be used to outline and separate the edge of pavement from the shoulder. Edge line markings *on HMA pavement* shall be 4 in. in width. *Edge line markings on PCCP shall be of preformed plastic material and 6 in. in width with an additional 1.5 in. to 2 in. of black contrast markings on each side for a total width of 9 in. to 10 in. The edge lines* ~~and~~ shall be placed such that the edge of the marking nearest the edge of the pavement shall be offset 4 in. from the edge of the pavement except as otherwise directed. Right edge lines shall be marked with a white solid line and left edge lines shall be marked with a yellow solid line.

PAVEMENT MESSAGE MARKINGS
[This is a proprietary special provision and requires a public interest finding]

The Standard Specifications are revised as follows:

SECTION 808.05, BEGIN LINE 147, INSERT AS FOLLOWS:

(b) Pavement Message Markings

Pavement message markings shall be used as specified or directed for railroad crossing approaches, intersection approaches, crosswalk approaches, ADA accessible parking space symbols, *interstate route shields*, and other messages applied to the pavement with pavement marking material. The markings shall consist of all necessary lines, words, and symbols as specified or directed, and shall be in accordance with the MUTCD.

Interstate route shields shall be 6 ft wide and have a length of 15 ft. Interstate route shields shall be thermoplastic and shall be chosen from the following manufacturers:

(a) Ennis-Flint, Inc.

(b) Approved Equal

Interstate route shields shall be supplemented with cardinal direction pavement message markings. The cardinal direction pavement message markings to be used with the interstate route shields shall be made of thermoplastic and have white letters on a blue background. The cardinal direction pavement message marking for "NORTH" or "SOUTH" shall be 9 ft wide and have a length of 10 ft. The cardinal direction pavement message marking for "EAST" or "WEST" shall be 8 ft. wide and have a length of 10 ft. The cardinal direction pavement message markings shall be chosen from the following manufacturers:

(a) Ennis-Flint, Inc.

(b) Approved Equal

A type C certification in accordance with 916 shall be furnished for the interstate route shields and cardinal direction pavement message markings.

SECTION 808.12, BEGIN LINE 621, INSERT AS FOLLOWS:

Grooving for pavement markings will be measured as the total distance of grooving for each pavement marking line in linear feet. Pavement message markings *except interstate route shields and cardinal direction pavement message markings* will be measured by the total number of each type placed. *Interstate route shields and cardinal direction pavement message markings will not be measured for payment.*

SECTION 808.13, BEGIN LINE 644, INSERT AS FOLLOWS:

Specified. Pavement message markings placed *except interstate route shields and cardinal direction pavement message markings* will be paid for at the contract unit price for each, for the material and message specified. *Interstate route shields and cardinal direction pavement message markings will be paid for at the contract lump sum price.*

PREFORMED PLASTIC MARKINGS

[This is a proprietary special provision and requires a public interest finding]

The Standard Specifications are revised as follows:

SECTION 808.07, BEGIN LINE 284, DELETE AND INSERT AS FOLLOWS:

(b) Durable Pavement Marking Material

Durable pavement marking material consists of thermoplastic, preformed plastic or multi-component markings. Durable pavement marking materials used for center lines, lane lines, or edge lines shall be installed within a groove in the pavement unless otherwise shown on the plans. Durable pavement marking materials used for barrier lines, pavement message, and transverse markings shall be surface applied unless otherwise indicated on the plans.

Durable pavement marking materials used for center lines, lane lines, or edge lines on this Contract shall be wet-reflective preformed plastic markings. Material application shall be in accordance with manufacturer recommendations. The cost of the wet-reflective elements in the preformed plastic shall be included in the cost of the markings. The wet reflective preformed plastic marking shall be chosen from the following manufacturers:

(a) 3M Company

(b) Approved Equal

A type C certification in accordance with 916 shall be furnished for the wet reflective preformed plastic markings.

INDEX	
SHEET NO.	SUBJECT
1	Sign Box Truss Structure Extended Span Drawing Index and General Notes
2	Plan & Elevation
3	Truss Sections, Table with Member Sizes
4	Table of Dimensions, Spans 130' thru 154' and Camber
5	Chord Connections and Weld Details
6	Flange, Chord End Plate, and Wire Outlet Details
7	Upper Chord Connection Details
8	Lower Chord Connection and Saddle Shim Details
9	End-Support Lower Chord Connections, Alternate HSS Beam, and Saddle Shim Details
10	End-Support Base Plate
11	I.D. Plate Details
12	End-Support Top Cap, Handhole, and J-Hook Details
13	End-Support Anchor Bolt and Metal Skirt Details
14	Spread Foundation at 33" Concrete Barrier Wall
15	Spread Foundation at 45" Concrete Barrier Wall
16	Spread Foundation for Median or Shoulder, 36" Height
17	Spread Foundations Quantities
18	Alternate Drilled Shaft Foundation at 33" Concrete Barrier Wall
19	Alternate Drilled Shaft Foundation at 45" Concrete Barrier Wall
20	Alternate Drilled Shaft Foundation for Median or Shoulder, 36" Height
21	Alternate Drilled Shaft Foundations Quantities

GENERAL NOTES:

1. All truss members, walkways, bearing elements, and wire outlets are aluminum. End-support members are steel.
2. I.D. plate is required on each end-support column.
3. Minimum concrete strength f'c = 3500 psi.
4. Thread and cap both ends of steel conduits.

INDIANA DEPARTMENT OF TRANSPORTATION

SIGN BOX TRUSS STRUCTURE
EXTENDED SPAN
DRAWING INDEX

Eff. for Lettings on or After 03-01-20

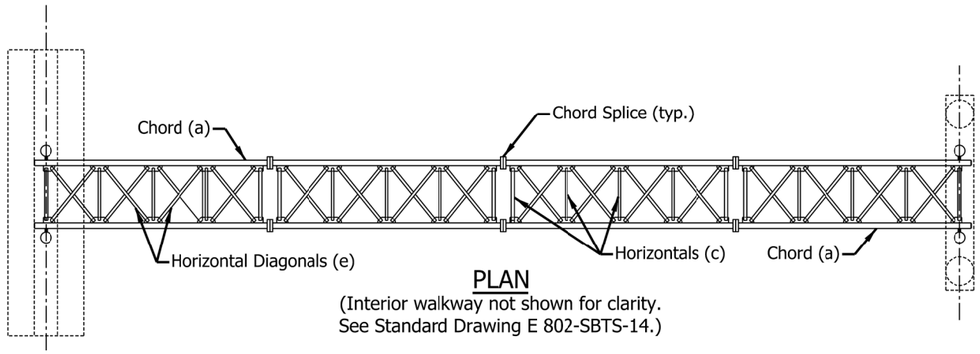

PLAN
(Interior walkway not shown for clarity.
See Standard Drawing E 802-SBTS-14.)

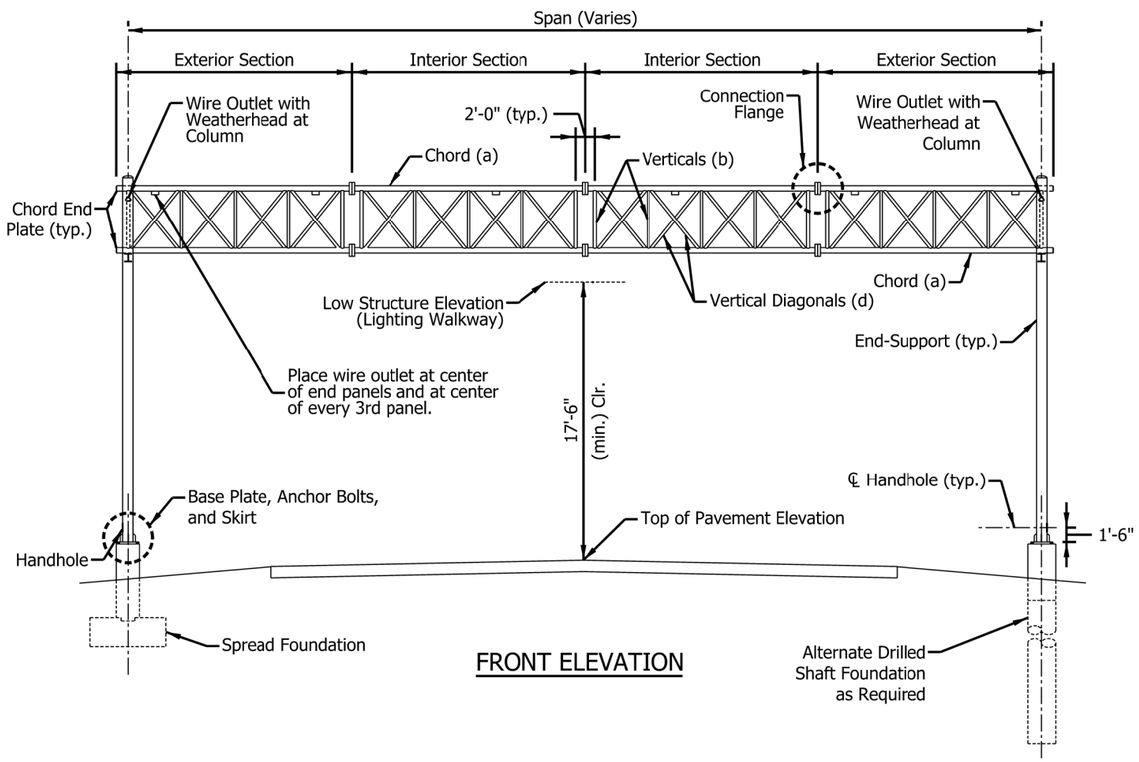

FRONT ELEVATION

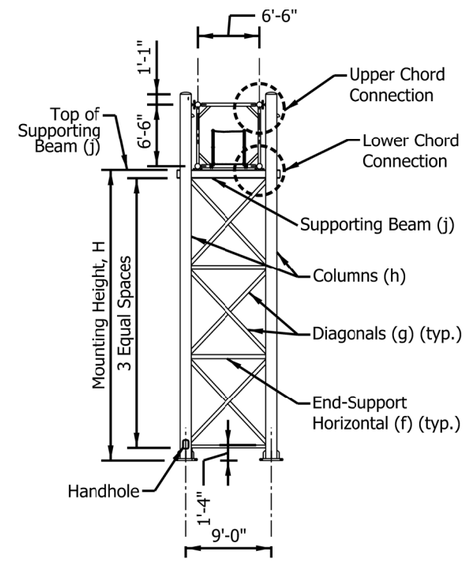

END-SUPPORT
SIDE VIEW

NOTES:

1. Maximum deviation of any chord from a straight line in any section shall be 1/8 in. for box truss to be a maximum of 3/8 in. out of a straight line over the entire length of the structure in the vertical plane.

INDIANA DEPARTMENT OF TRANSPORTATION

SIGN BOX TRUSS STRUCTURE
EXTENDED SPAN
PLAN & ELEVATION

Eff. for Lettings on or After 03-01-20

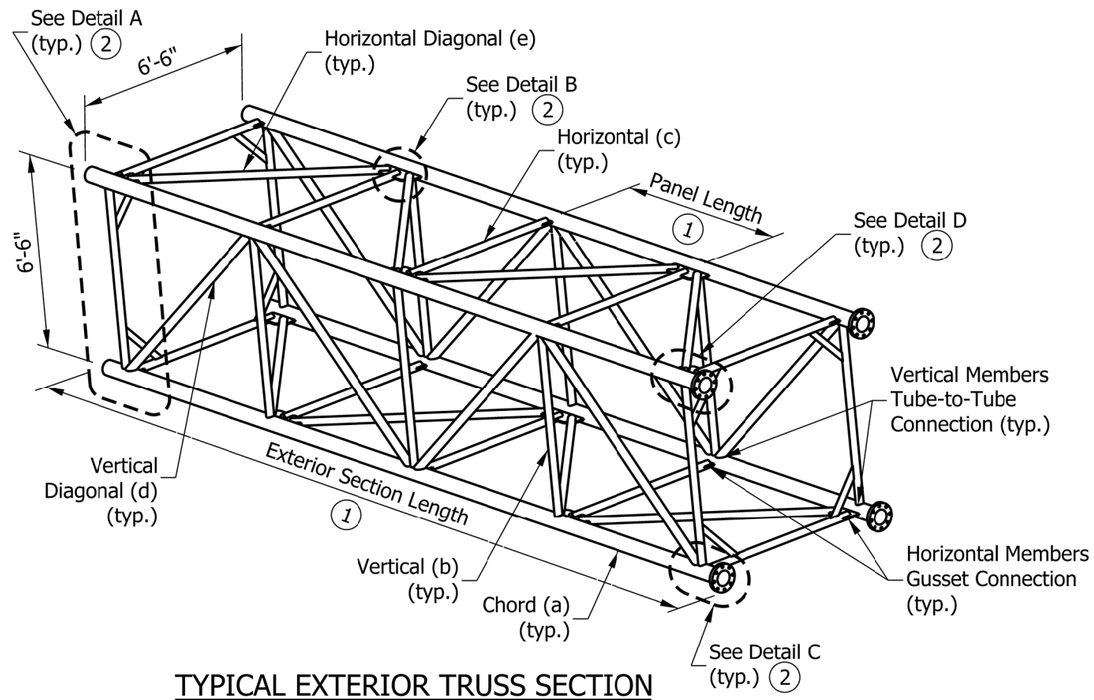

TYPICAL EXTERIOR TRUSS SECTION

NOTES:

1. Number of panels varies. See table on Sheet 4 for recommended dimensions.
2. See sheet 5 for welded connections and Details A through F.
3. Steel pipe diameters shown in table are nominal pipe size.
4. A corner brace is required on each of the eight external corners of exterior and interior sections.

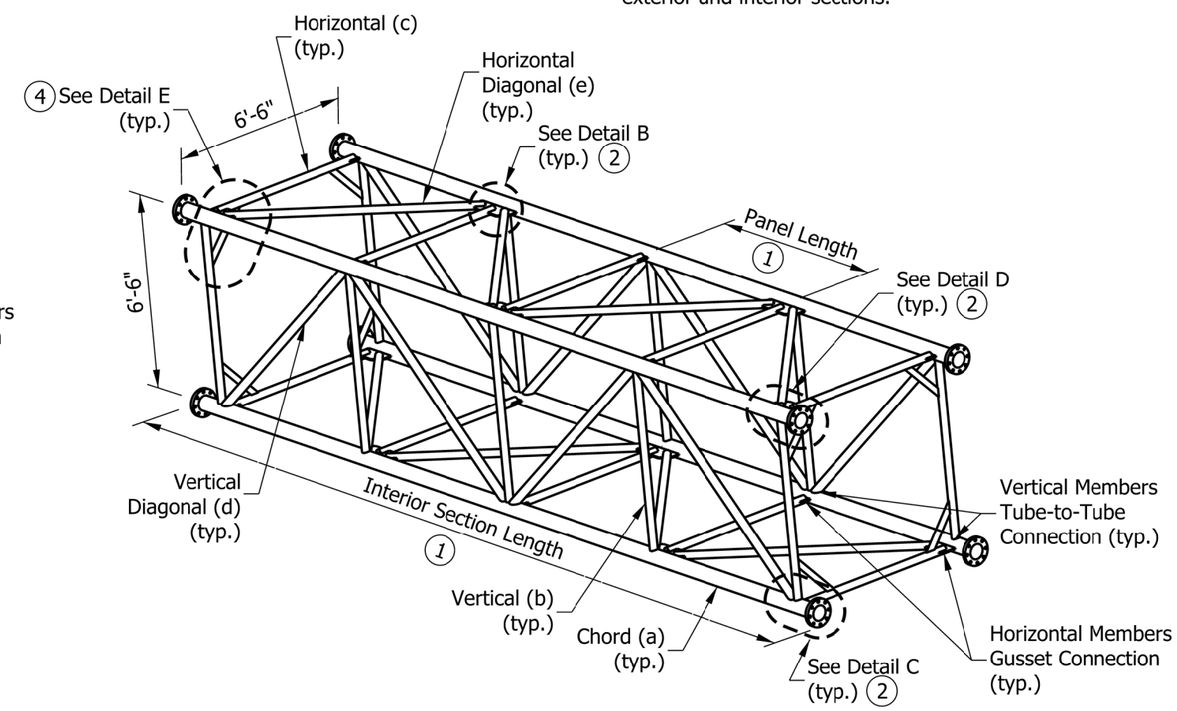

TYPICAL INTERIOR TRUSS SECTION

TRUSS TYPE	MAX. SIGN AREA	MAX. SPAN	MAX. MOUNTING HEIGHT	TRUSS MEMBERS, ALUMINUM										END-SUPPORT MEMBERS, STEEL						
				CHORD		VERTICAL		HORIZONTAL		VERTICAL DIAGONAL		HORIZONTAL DIAGONAL		HORIZONTAL		DIAGONAL		COLUMN		SUPPORTING BEAM
			H	a		b		c		d		e		f		g		h		j
				DIA.	THK	DIA.	THK	DIA.	THK	DIA.	THK	DIA.	THK	DIA.	THK	DIA.	THK	DIA.	THK	
	SQ. FT.	FT.	FT.	IN.	IN.	IN.	IN.	IN.	IN.	IN.	IN.	IN.	IN.	IN.	IN.	IN.	IN.	IN.	IN.	
F	1200	130	28'-6"	7.00	0.500	3.00	0.375	4.00	0.375	3.00	0.500	4.00	0.500	5.00	0.375	8.00	0.593	18.00	0.562	W 10 x 68 or HSS 10" x 10" x 1/2"
G		142	28'-6"	7.50	0.500	4.00	0.375	4.00	0.375	4.00	0.500	4.00	0.500	5.00	0.375	8.00	0.593	18.00	0.562	
H		154	28'-6"	9.00	0.500	4.00	0.500	4.00	0.375	4.00	0.500	4.00	0.500	5.00	0.375	8.00	0.593	18.00	0.562	

INDIANA DEPARTMENT OF TRANSPORTATION

SIGN BOX TRUSS STRUCTURE EXTNEDED SPAN
TRUSS SECTIONS IN ISOMETRIC VIEWS,
TABLE WITH MEMBER SIZES

DIMENSIONS FOR SIGN BOX TRUSSES (130' THRU 154')

SPAN	EXTERIOR SECTIONS					INTERIOR SECTIONS			
SPAN-TRUSS LENGTH, (FT)	NO. OF EXT. SECTIONS	NO. OF PANELS PER SECTION	VARIABLE END DIMEN.	PANEL LENGTH	SECTION LENGTH	NO. OF INT. SECTIONS	NO. OF PANELS PER SECTION	PANEL LENGTH	SECTION LENGTH
130	2	5	0" - 6 1/2"	6'-1 3/4"	33'-0 1/4"	2	5	6'-1 3/4"	32'-8 3/4"
131	2	5	0" - 6 1/4"	6'-2 3/8"	33'-3 1/8"	2	5	6'-2 3/8"	32'-11 7/8"
132	2	5	0" - 6"	6'-3"	33'-6"	2	5	6'-3"	33'-3"
133	2	5	0" - 7"	6'-3 1/2"	33'-9 1/2"	2	5	6'-3 1/2"	33'-5 1/2"
134	2	5	0" - 6 3/4"	6'-4 1/8"	34'-0 3/8"	2	5	6'-4 1/8"	33'-8 5/8"
135	2	5	0" - 6 1/2"	6'-4 3/4"	34'-3 1/4"	2	5	6'-4 3/4"	33'-11 3/4"
136	2	5	0" - 6 1/4"	6'-5 3/8"	34'-6 1/8"	2	5	6'-5 3/8"	34'-2 7/8"
137	2	5	0" - 6"	6'-6"	34'-9"	2	5	6'-6"	34'-6"
138	2	6	0" - 6 7/8"	5'-11 3/8"	38'-0 1/8"	2	5	5'-11 3/8"	31'-8 7/8"
139	2	6	0" - 7 3/8"	5'-11 7/8"	38'-3 5/8"	2	5	5'-11 7/8"	31'-11 3/8"
140	2	6	0" - 6 1/2"	6'-0 1/2"	38'-6 1/2"	2	5	6'-0 1/2"	32'-2 1/2"
141	2	6	0" - 7"	6'-1"	38'-10"	2	5	6'-1"	32'-5"
142	2	6	0" - 6 1/8"	6'-1 5/8"	39'-0 7/8"	2	5	6'-1 5/8"	32'-8 1/8"
143	2	6	0" - 6 5/8"	6'-2 1/8"	39'-4 3/8"	2	5	6'-2 1/8"	32'-10 5/8"
144	2	6	0" - 7 1/8"	6'-2 5/8"	39'-7 7/8"	2	5	6'-2 5/8"	33'-1 1/8"
145	2	6	0" - 6 1/4"	6'-3 1/4"	39'-10 3/4"	2	5	6'-3 1/4"	33'-4 1/4"
146	2	6	0" - 6 3/4"	6'-3 3/4"	40'-2 1/4"	2	5	6'-3 3/4"	33'-6 3/4"
147	2	6	0" - 5 7/8"	6'-4 3/8"	40'-5 1/8"	2	5	6'-4 3/8"	33'-9 7/8"
148	2	6	0" - 6 3/8"	6'-4 7/8"	40'-8 5/8"	2	5	6'-4 7/8"	34'-0 3/8"
149	2	6	0" - 6 7/8"	6'-5 3/8"	41'-0 1/8"	2	5	6'-5 3/8"	34'-2 7/8"
150	2	6	0" - 7 1/2"	5'-11 3/8"	38'-0 3/4"	2	6	5'-11 3/8"	37'-8 1/4"
151	2	6	0" - 7 1/2"	5'-11 7/8"	38'-3 3/4"	2	6	5'-11 7/8"	37'-11 1/4"
152	2	6	0" - 6"	6'-0 1/2"	38'-6"	2	6	6'-0 1/2"	38'-3"
153	2	6	0" - 6"	6'-1"	38'-9"	2	6	6'-1"	38'-6"
154	2	6	0" - 6"	6'-1 1/2"	39'-0"	2	6	6'-1 1/2"	38'-9"

NOTES:

1. All panels on a truss shall be the same length. The minimum panel length is 5 ft. 0 in. and the maximum is 6 ft. 6 in.
2. Use minimum number of sections for each box truss structure.
3. Camber diagrams for truss structures with 4 sections is shown. Cambers shown are for fabrication only and are measured with trusses fully supported at no-load conditions. Allowable camber tolerance for truss is 25% of specific camber value.

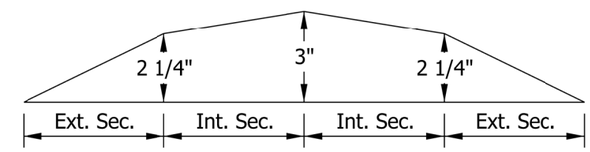

CAMBER DIAGRAM (4-Section Truss)

INDIANA DEPARTMENT OF TRANSPORTATION

SIGN BOX TRUSS STRUCTURE EXTENDED SPAN
TABLE OF DIMENSIONS
SPANS 130' THROUGH 154" AND CAMBER

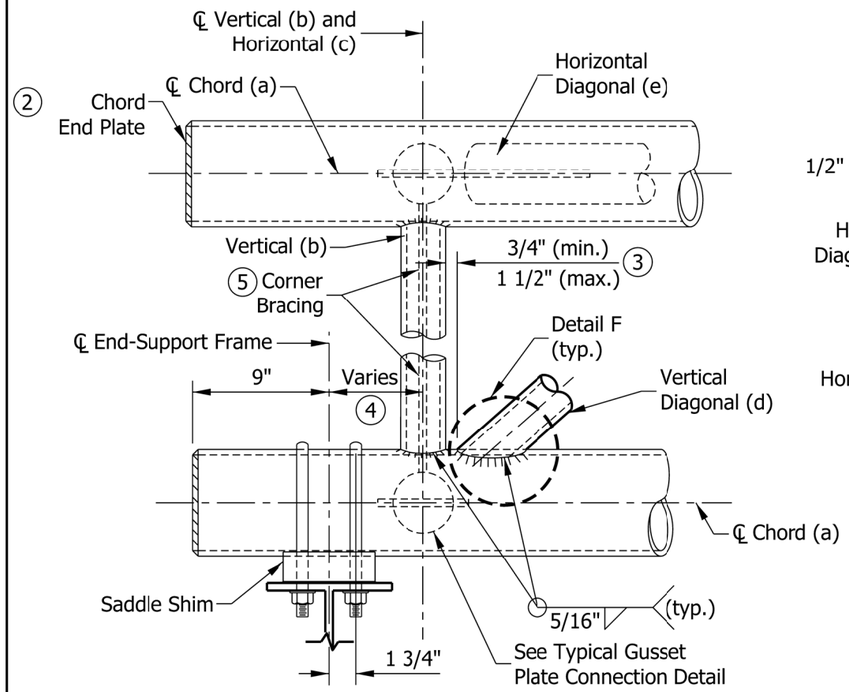

DETAIL A
EXTERIOR SECTION AT END SUPPORT

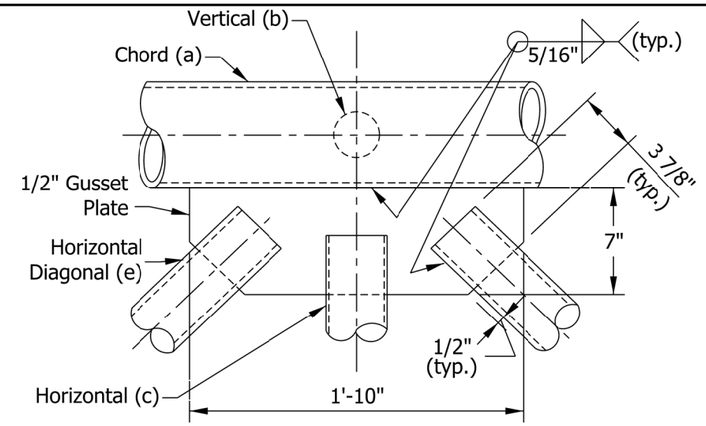

DETAIL B
TYPICAL PANEL CONNECTION
PLAN VIEW

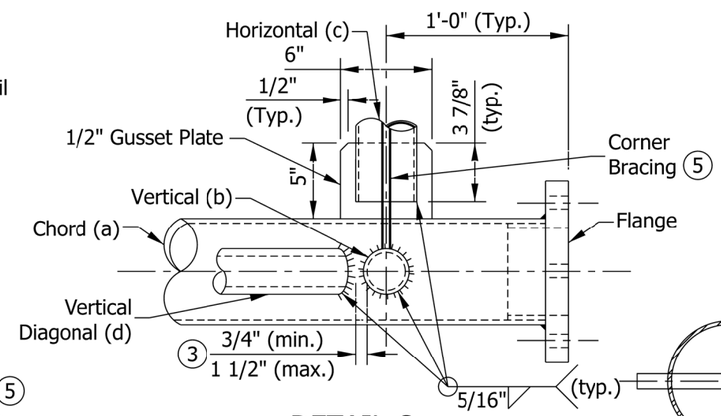

DETAIL C
CHORD AT FLANGE CONNECTION
PLAN VIEW

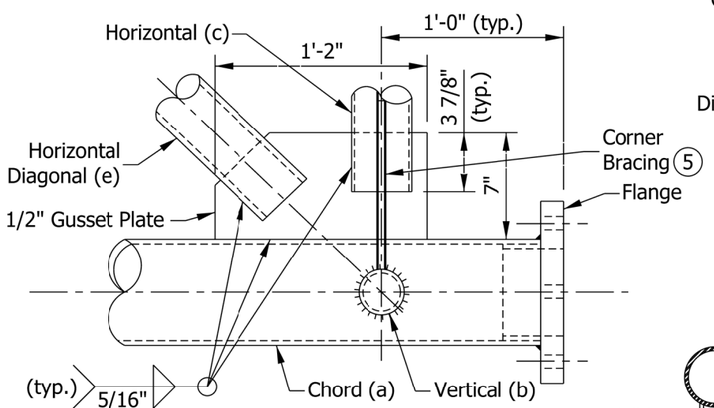

DETAIL D
CHORD AT FLANGE CONNECTION
PLAN VIEW

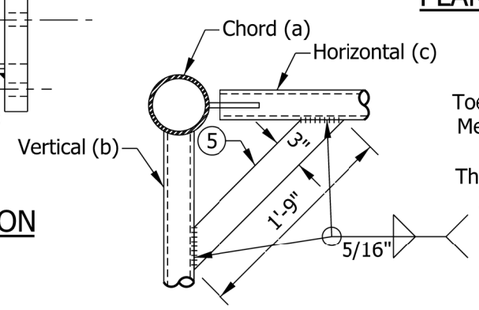

DETAIL E
TYPICAL CORNER BRACING

Toe Edge of Diagonal Member Shall be Cut Back to Facilitate Throat Thickness Per AWS D1.1, Fig 3.2

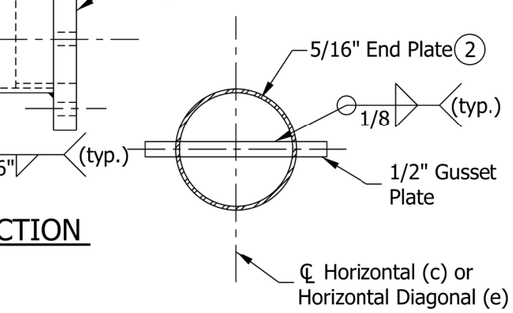

SECTION A-A

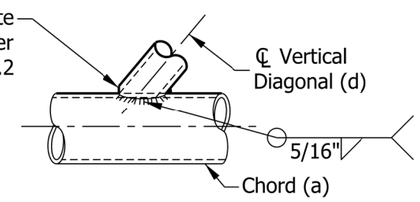

DETAIL F

NOTES:

1. All bracing members shall be machined to provide a snug fit to the chord along the entire edge of bracing member before welding.

2. End plate at horizontal (c) and horizontal diagonal (e) may be welded as one piece and slotted or welded as two pieces after slotting the member.

3. Vertical and horizontal diagonals shall be fabricated for minimum offset from the panel point offset to provide a 3/4 in. minimum to 1 1/2 in. maximum clearance between any diagonal and any horizontal or vertical member.

4. See sheet 4 for variable end dimension

5. Each brace member to be 3 in. x 1ft. 9in. x 1/2 in. plate and placed at 45° to vertical.

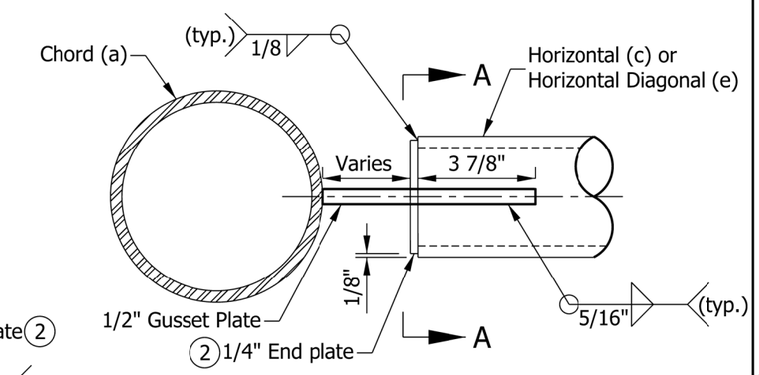

TYPICAL GUSSET PLATE CONNECTION DETAIL
ELEVATION VIEW

INDIANA DEPARTMENT OF TRANSPORTATION

SIGN BOX TRUSS STRUCTURE EXTENDED SPAN
CHORD CONNECTIONS AND WELD DETAILS

Eff. for Lettings on or After 03-01-20

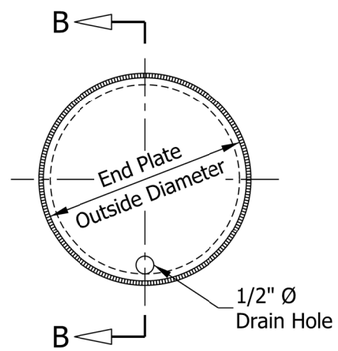

END VIEW

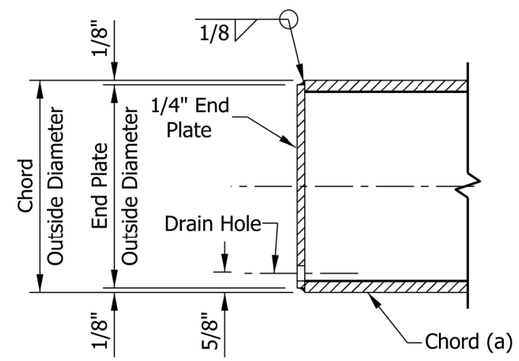

SECTION B-B

CHORD END PLATE DETAILS

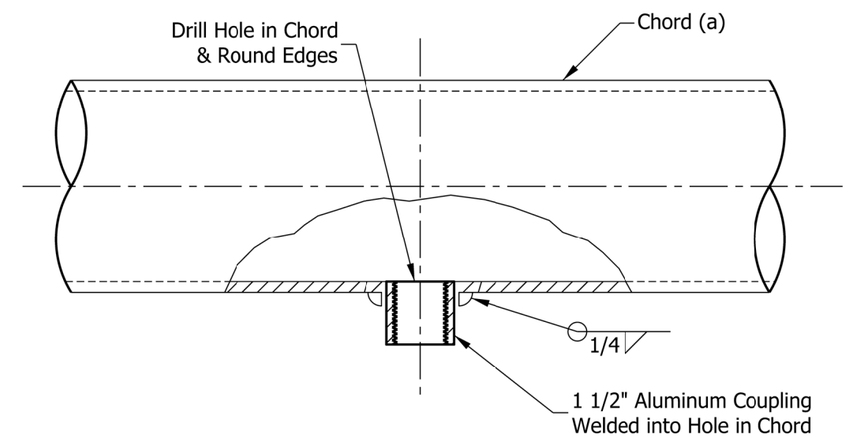

WIRE OUTLET DETAIL

TABLE OF FLANGE DIMENSIONS						
TRUSS TYPE	TRUSS CHORD O.D. x THK.	BOLT SIZE	DIMENSION			
			A	B	C	D
F	7" x 1/2"	7/8"	14"	10"	5 1/2"	1 3/4"
G	7 1/2" x 1/2"	7/8"	14 1/2"	10 1/2"	6"	2"
H	9" x 1/2"	7/8"	16"	12"	7 1/2"	2"

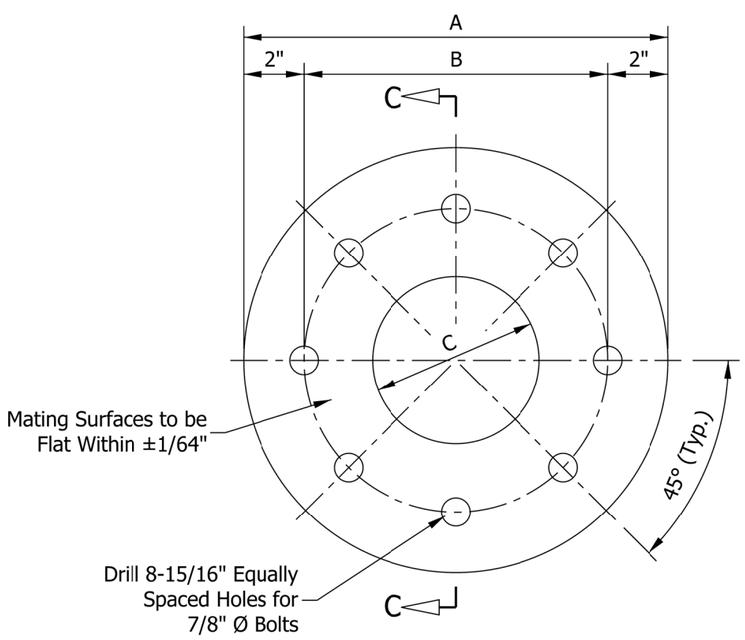

END VIEW

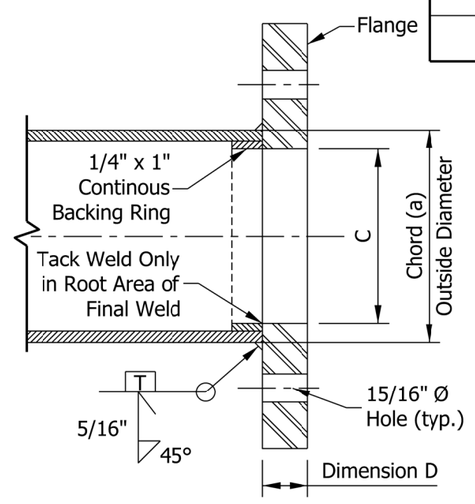

SECTION C-C

FLANGE DETAILS

INDIANA DEPARTMENT OF TRANSPORTATION

SIGN BOX TRUSS STRUCTURE EXTENDED SPAN
FLANGE, CHORD END PLATE, AND WIRE
OUTLET DETAILS

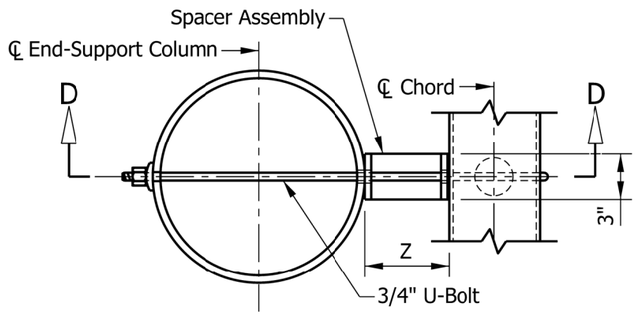

PLAN

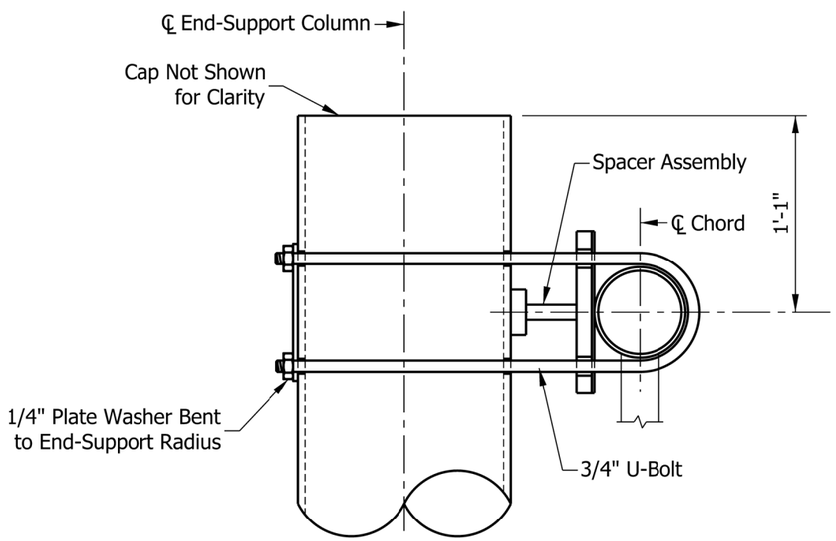

SECTION D-D
UPPER CHORD CONNECTION DETAILS

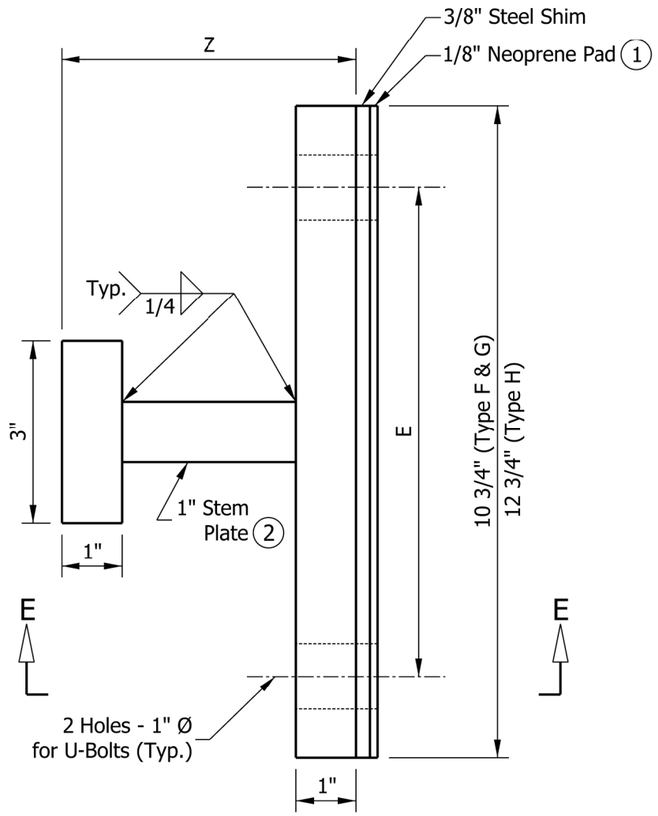

ELEVATION
END SUPPORT SPACER ASSEMBLY DETAIL

NOTES:

1. Provide isolation from steel-dissimilar metal as required.
2. For trusses, type F, the 1 in. stem plate is not required. Fillet weld front and rear plates together. Spacer assembly is not required for Truss Type G & H.
3. Dimension E is equal to the diameter of chord (a) plus 1 in.

SPACER ASSEMBLY DIMENSIONS						
TRUSS TYPE	END-SUPPORT COLUMN SIZE O.D (h)	CHORD O. D. (a)	Ø OF U-BOLT BEND (D)	E	Z	L
F	18"	7"	7 1/16"	8"	2"	26"
G	18"	7 1/2"	7 9/16"	8 1/2"	1 3/4"	26"
H	18"	9"	9 1/16"	10"	1"	26"

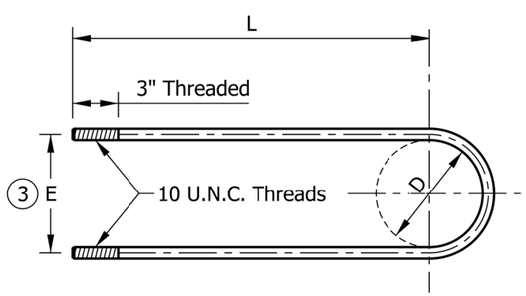

3/4" DIA. STAINLESS STEEL U-BOLT DETAIL

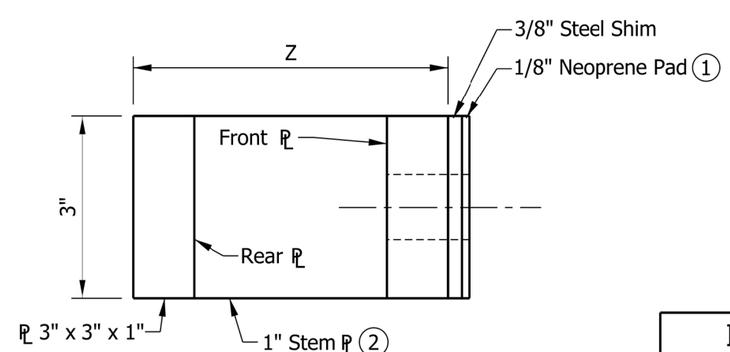

SECTION E-E

INDIANA DEPARTMENT OF TRANSPORTATION

SIGN BOX TRUSS STRUCTURE EXTENDED SPAN
END-SUPPORT
UPPER CHORD CONNECTION DETAILS

Eff. for Lettings on or After 03-01-20

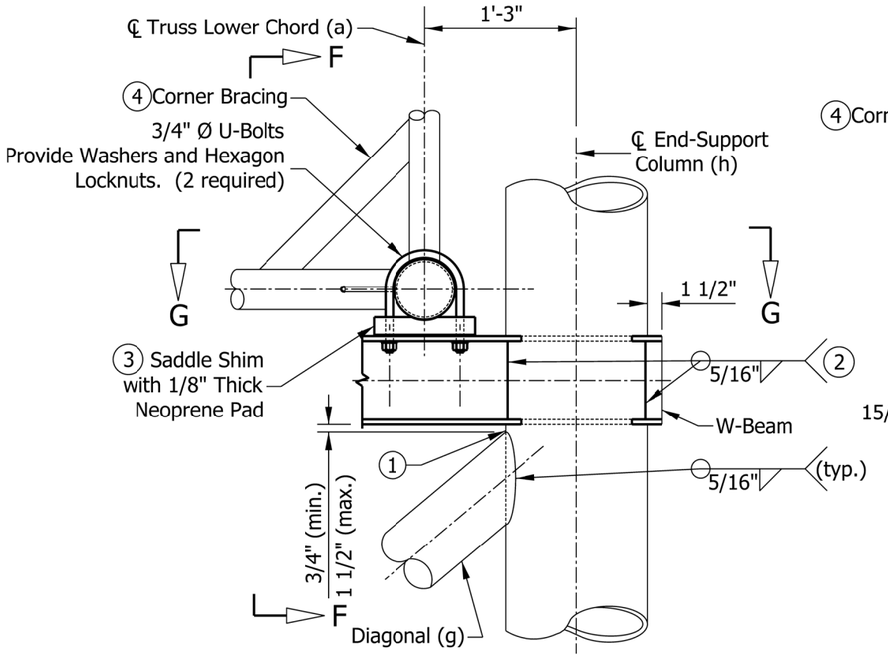

LOWER CHORD CONNECTION DETAIL

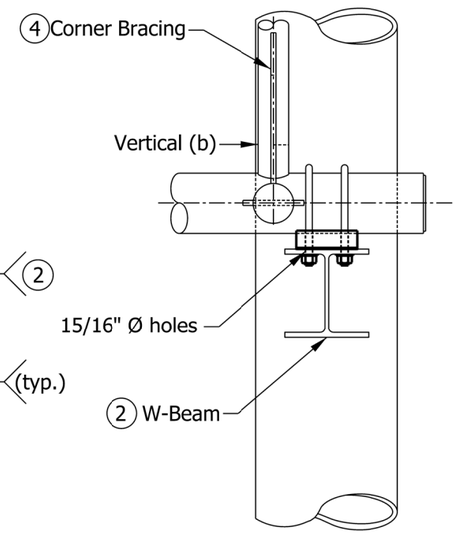

SECTION F-F

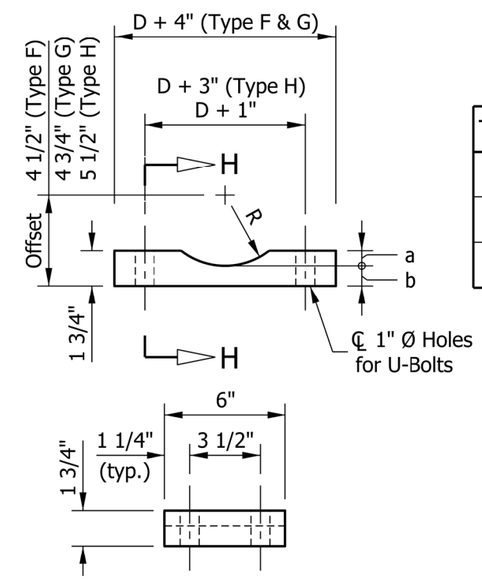

SECTION H-H
SADDLE SHIM DETAIL

NOTES:

1. Toe edge of diagonal member shall be cut back to facilitate throat thickness. See sheet 5, detail F.
2. Cut holes in end support columns for W-beams to pass through. Holes have 1/8 in. maximum clearance to W-beam. Hole in opposite sides of column to be checked for proper alignment prior to cutting.
3. Provide neoprene pads at all chord-to-W-beam bearing surfaces.
4. A corner brace is required on each of the eight external corners of exterior and interior sections. Each brace shall be 1 ft. 9 in. x 3 in. x 1/2 in. See sheet 5, detail E.

TRUSS TYPE	D	a	b
F	7"	25/32"	31/32"
G	7 1/2"	25/32"	31/32"
H	9"	25/32"	31/32"

R = D/2 + 1/32"

R + b = Offset

D = Outside Diameter of Chord(a).

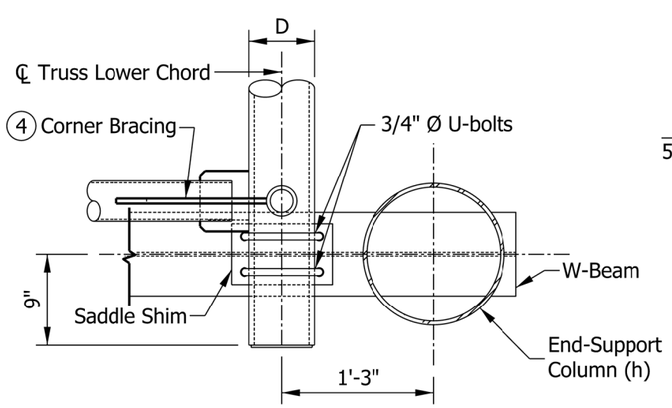

SECTION G-G

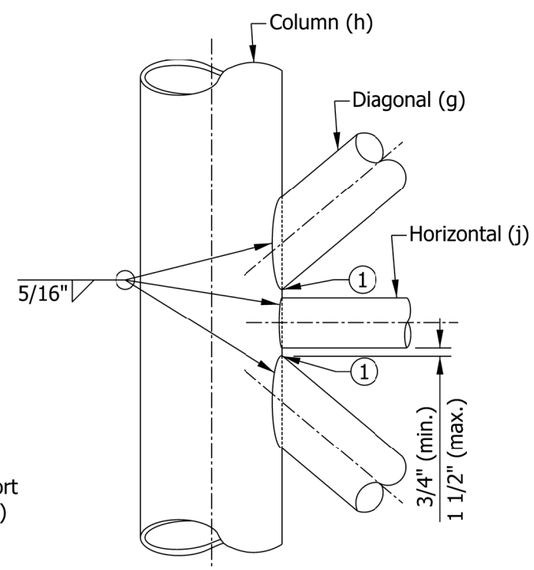

ELEVATION (END-SUPPORT)
TYPICAL BRACING MEMBERS CONNECTION

INDIANA DEPARTMENT OF TRANSPORTATION

SIGN BOX TRUSS STRUCTURE EXTENDED SPAN
END-SUPPORT LOWER CHORD
CONNECTION DETAILS

Eff. for Lettings on or After 03-01-20

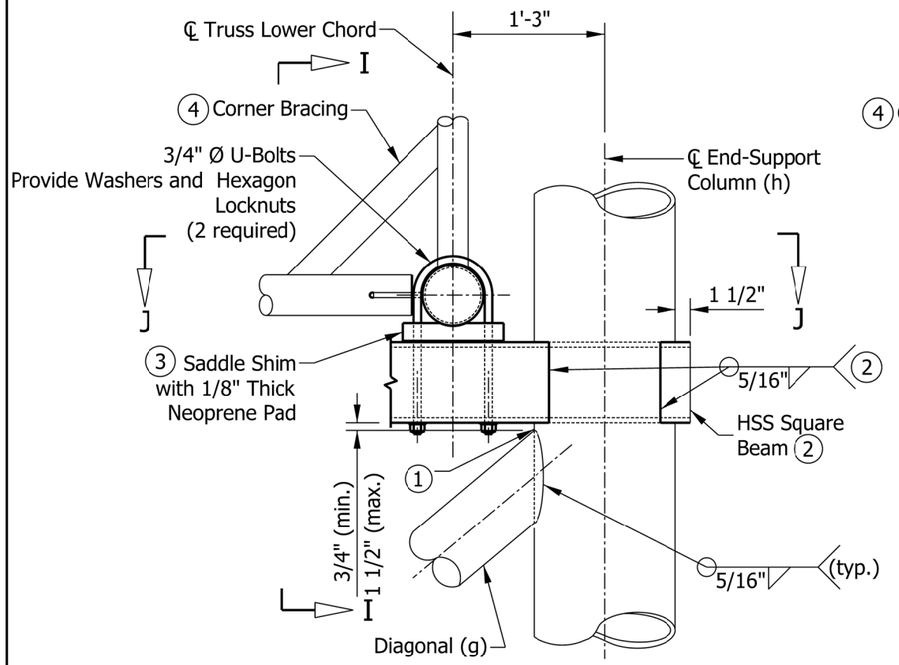

LOWER CHORD CONNECTION DETAIL

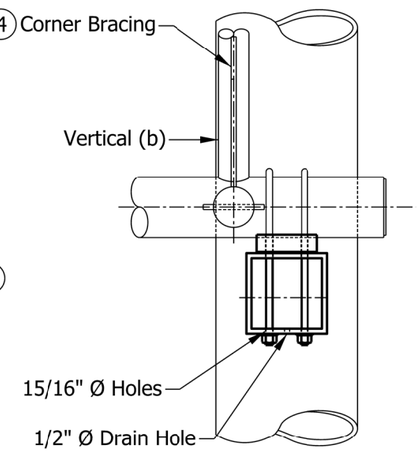

SECTION I-I

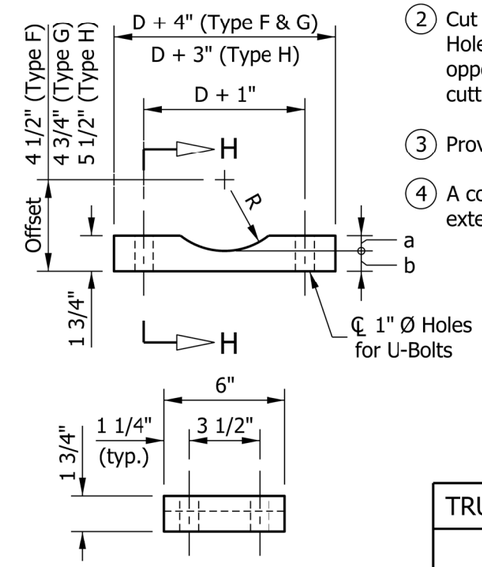

SECTION H-H
SADDLE SHIM DETAIL

NOTES:

1. Toe edge of diagonal member shall be cut back to facilitate throat thickness. See sheet 5, Detail F.
2. Cut holes in end support columns for square beams to pass through. Holes to have 1/8 in. maximum clearance to square beam. Holes in opposite sides of column to be checked for proper alignment prior to cutting.
3. Provide neoprene pads at all chord-to-square-beam bearing surfaces.
4. A corner brace is required on each of the eight external corners of exterior and interior sections. See sheet 5, Detail E.

TRUSS TYPE	D	a	b
F	7"	25/32"	31/32"
G	7 1/2"	25/32"	31/32"
H	9"	25/32"	31/32"

R = D/2 + 1/32"

R + b = Offset

D = Outside Diameter of Chord(a).

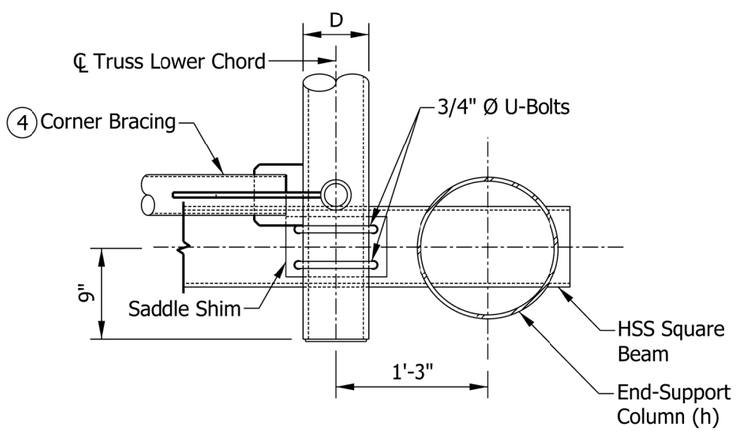

SECTION J-J

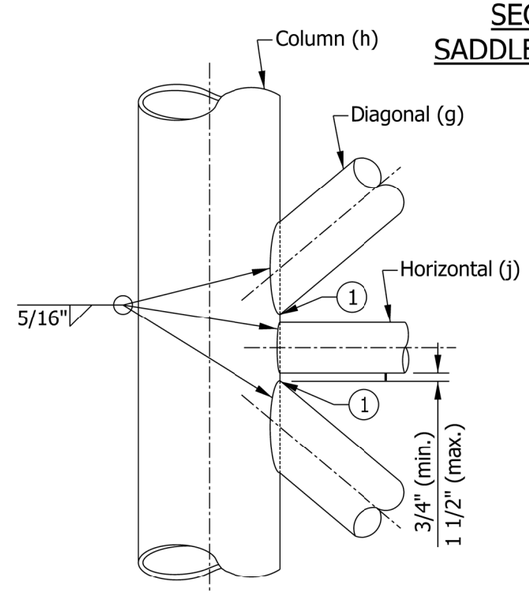

ELEVATION (END-SUPPORT)
TYPICAL BRACING MEMBERS CONNECTION

INDIANA DEPARTMENT OF TRANSPORTATION

SIGN BOX TRUSS STRUCTURE EXTENDED SPAN
END-SUPPORT LOWER CHORD
CONNECTION DETAILS, ALTERNATE HSS BEAM

Eff. for Lettings on or After 03-01-20

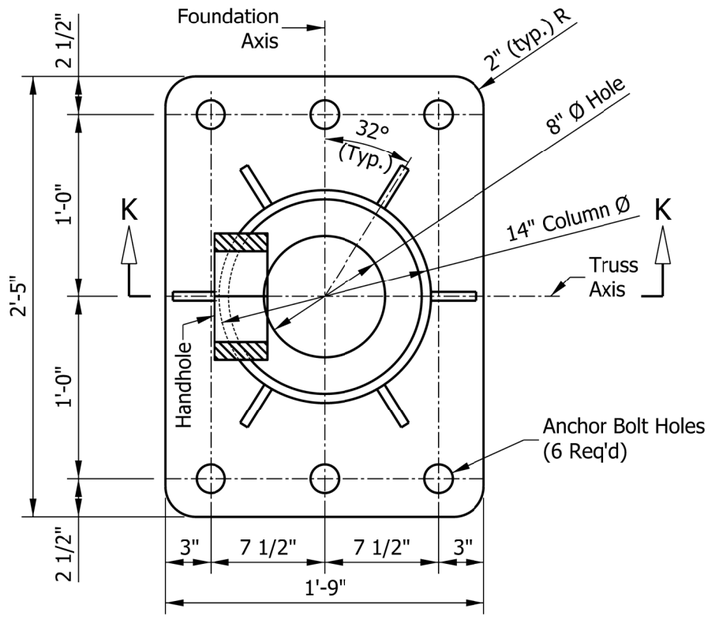

TYPE B-14 BASE PLATE

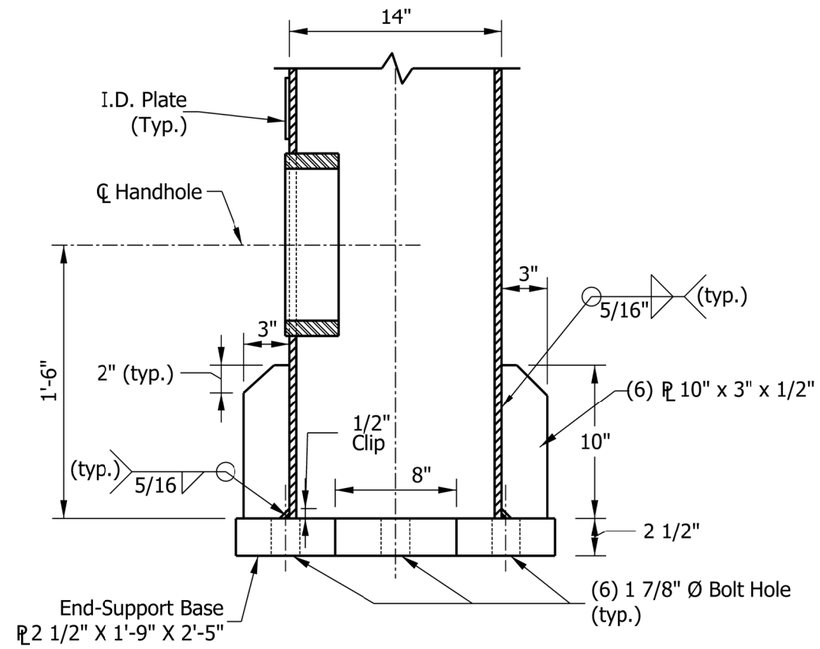

SECTION K-K

NOTES:

1. • Type B-14 base plate for end-support column diameter of 14 in.
   • Type B-18 base plate for end-support column diameter of 18 in.

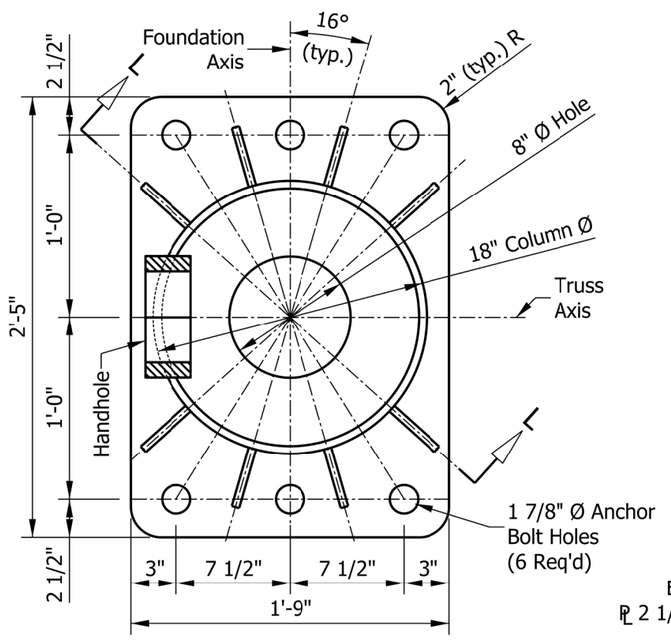

TYPE B-18 BASE PLATE

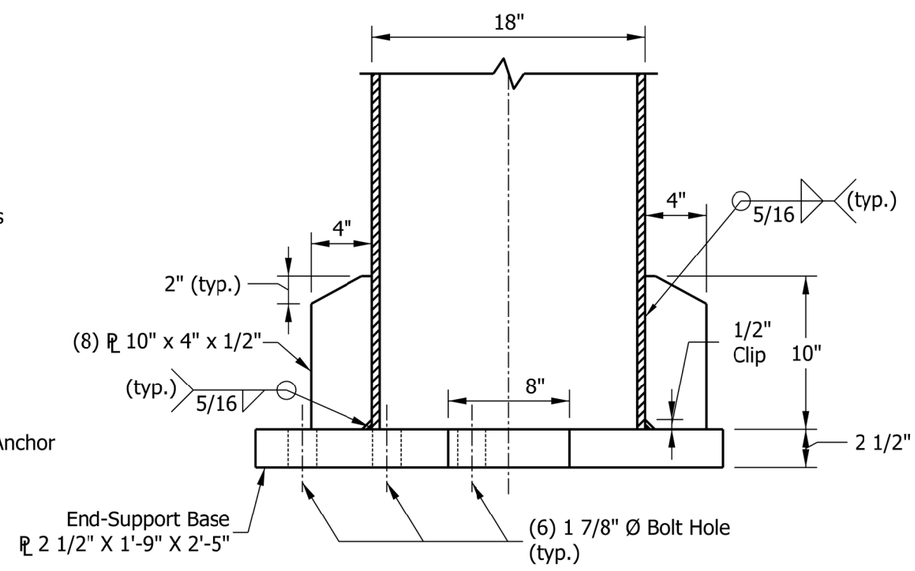

SECTION L-L

INDIANA DEPARTMENT OF TRANSPORTATION

SIGN BOX TRUSS STRUCTURE EXTENDED SPAN
END-SUPPORT BASE PLATE

NOTES:

1. I.D. plate is required on each end-support column. I.D. plate is a 1/8 in. thick stainless steel plate.

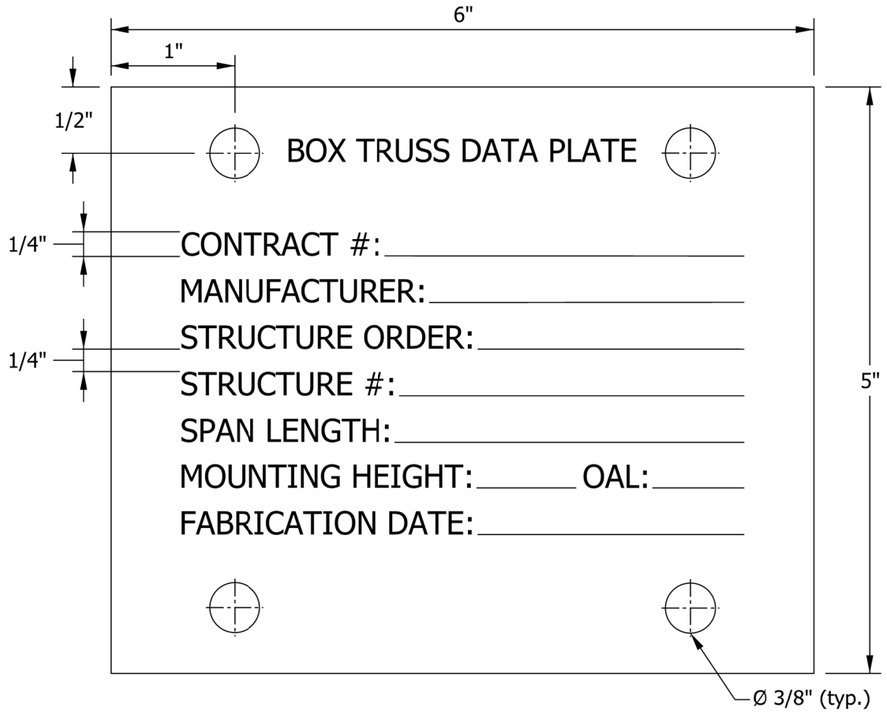

I.D PLATE

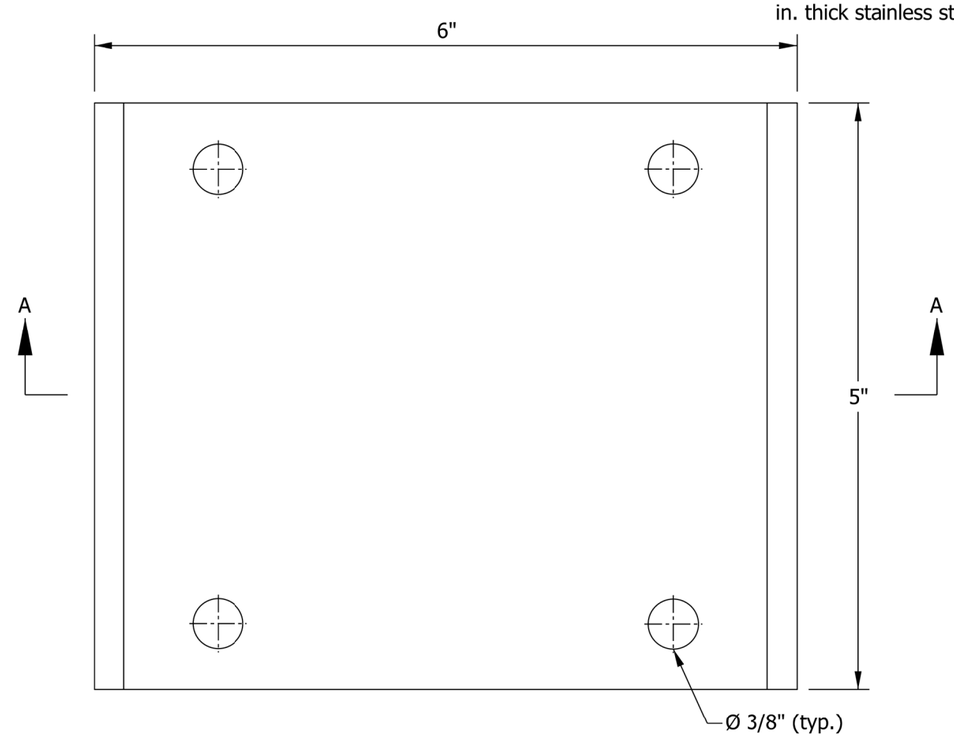

I.D PLATE CHANNEL

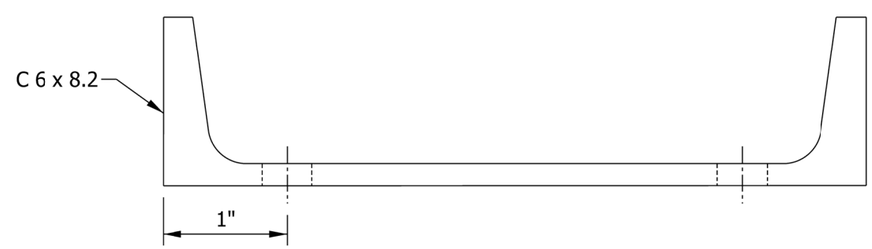

SECTION A-A

INDIANA DEPARTMENT OF TRANSPORTATION

SIGN BOX TRUSS STRUCTURE EXTENDED SPAN
I.D. PLATE DETAILS

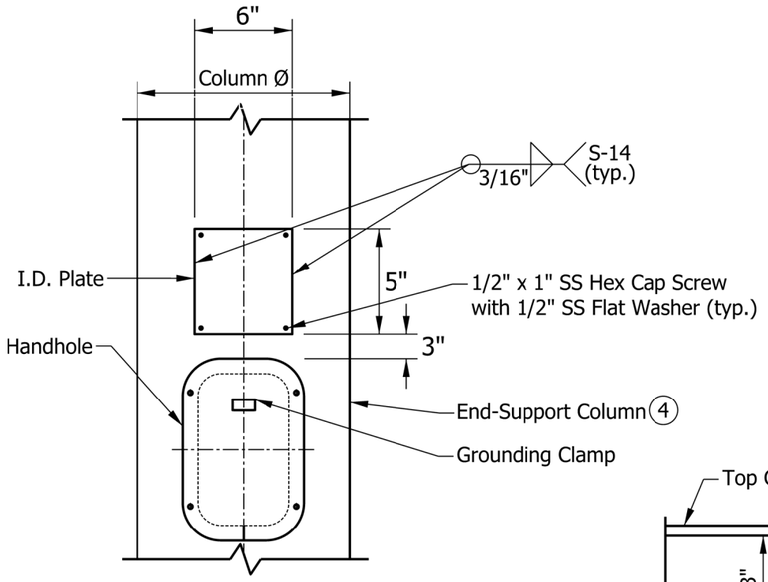

ELEVATION
VIEW FROM HANDHOLE SIDE

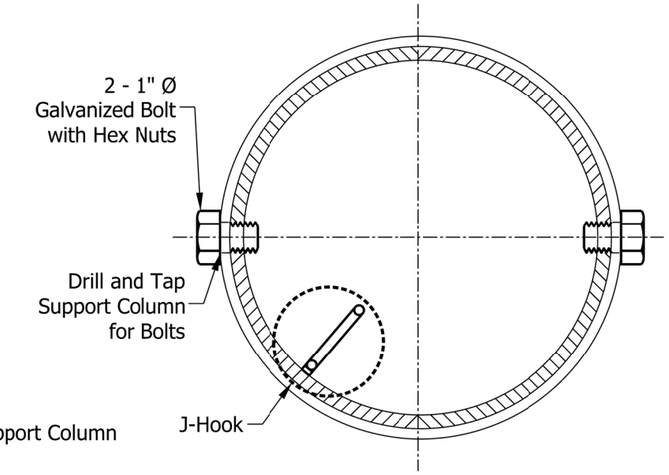

SECTION M-M

NOTES:

1. In lieu of fabricatied handhole frame as shown, frame may be cut from 3 in. plate (rolling direction vertical).
2. See Standard Drawing E 802-SNWR-03 for grounding post details. Grounding post to be placed on far side of support directly opposite center of handhole.
3. See sheet 3 for thickness of end-support columns (h).
4. Each end-support shall have one handhole at the column (h) base. Handhole shall be placed on the column nearest to the sign.

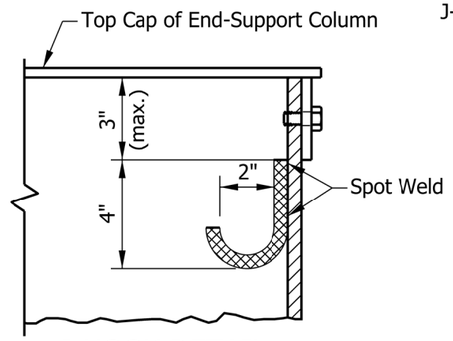

J-HOOK DETAIL

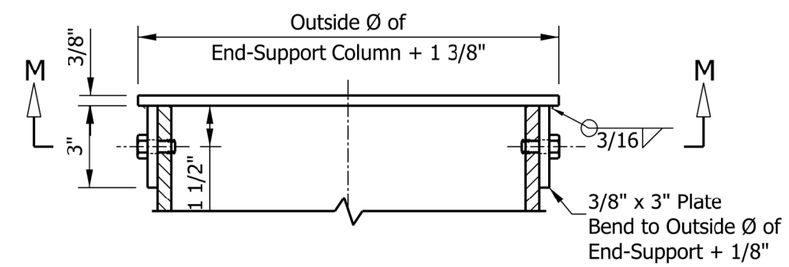

TOP CAP
ELEVATION VIEW

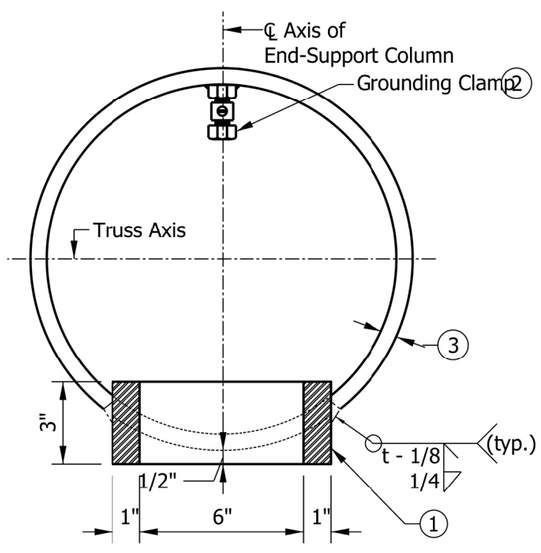

HANDHOLE
SECTION ACROSS COLUMN

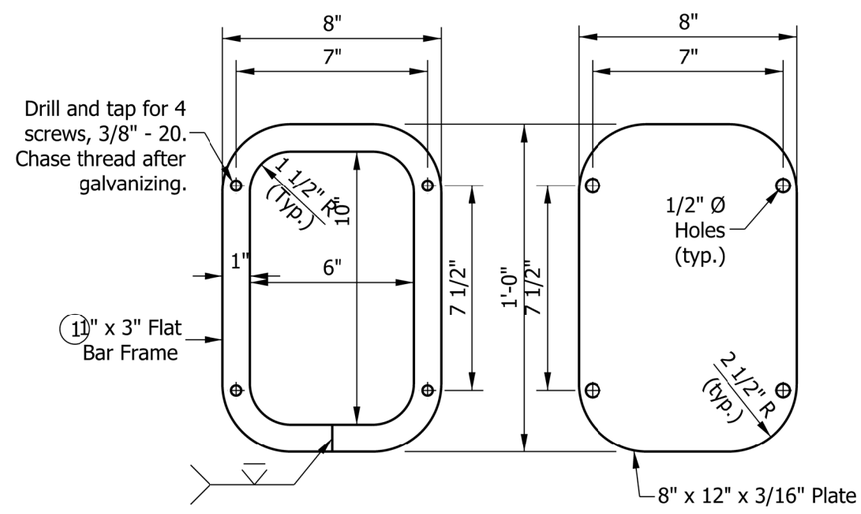

HANDHOLE FRAME DETAIL

HANDHOLE COVER

INDIANA DEPARTMENT OF TRANSPORTATION

SIGN BOX TRUSS STRUCTURE EXTENDED SPAN
END-SUPPORT
TOP-CAP, HANDHOLE, AND J-HOOK DETAILS

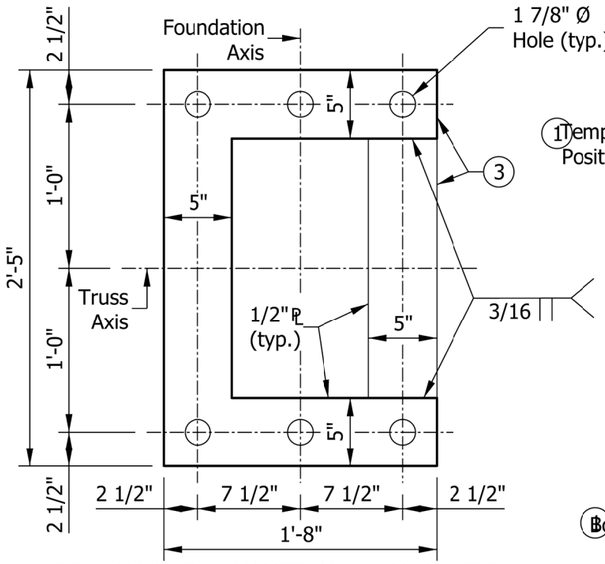

TEMPORARY POSITIONING PLATE

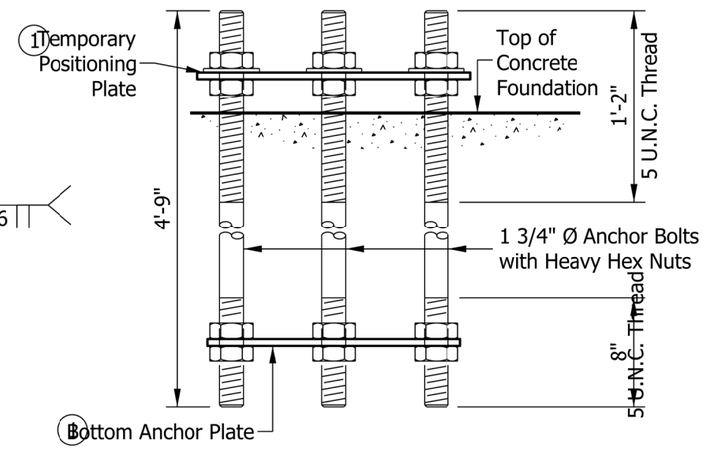

ANCHOR BOLT DETAILS
BEFORE CONCRETE PLACEMENT

NOTES:

1. Use temporary positioning plate and bottom anchor plate for all foundations. Temporary positioning plate should be removed after placing concrete.
2. Minimum base plate gap is 2 1/2 in. and can be increased up to 5 1/2 in. Metal skirt width shall be at least 1 1/2 in. more than the actual gap.
3. May use four separate 5 in. plates welded together to maintain angles and shape as shown.
4. May use two separate 3 in. and two separate 5 in. plates welded together to maintain angles and shape as shown.

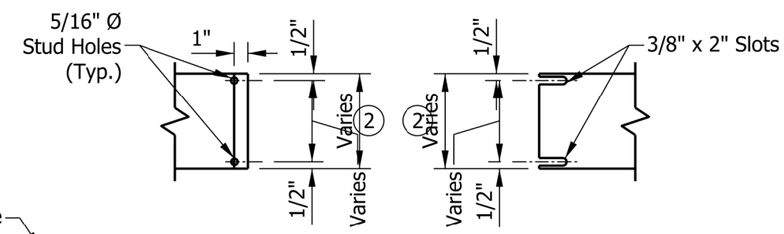

DETAIL G DETAIL H

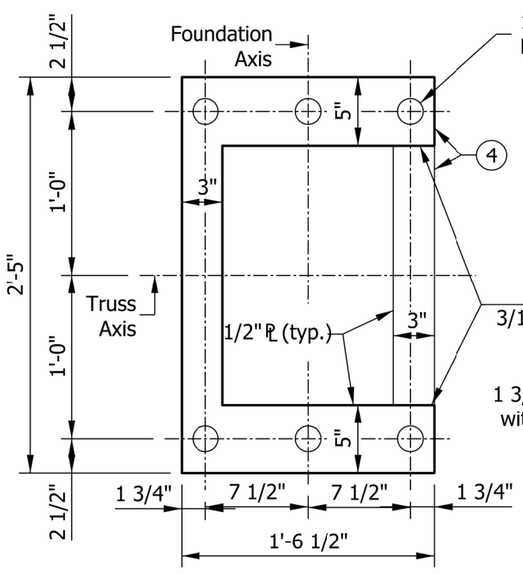

BOTTOM ANCHOR PLATE

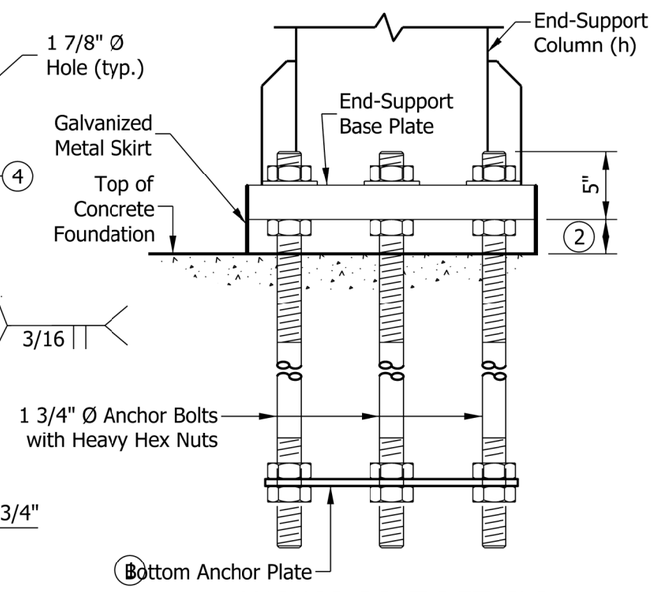

ANCHOR BOLT DETAILS
AFTER CONCRETE PLACEMENT

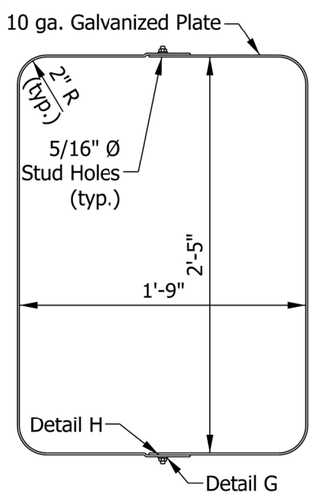

METAL SKIRT DETAIL

INDIANA DEPARTMENT OF TRANSPORTATION

SIGN BOX TRUSS STRUCTURE EXTENDED SPAN
END-SUPPORT
ANCHOR BOLT AND METAL SKIRT DETAILS

Eff. for Lettings on or After 03-01-20

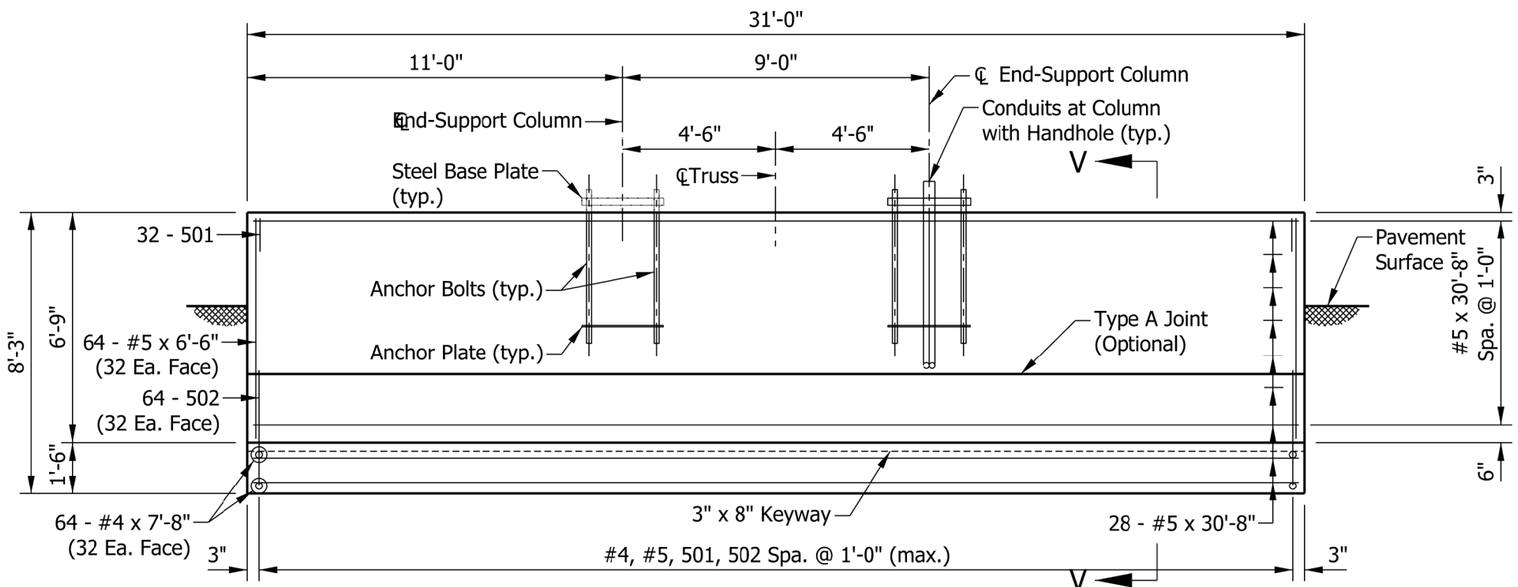

SECTION U-U

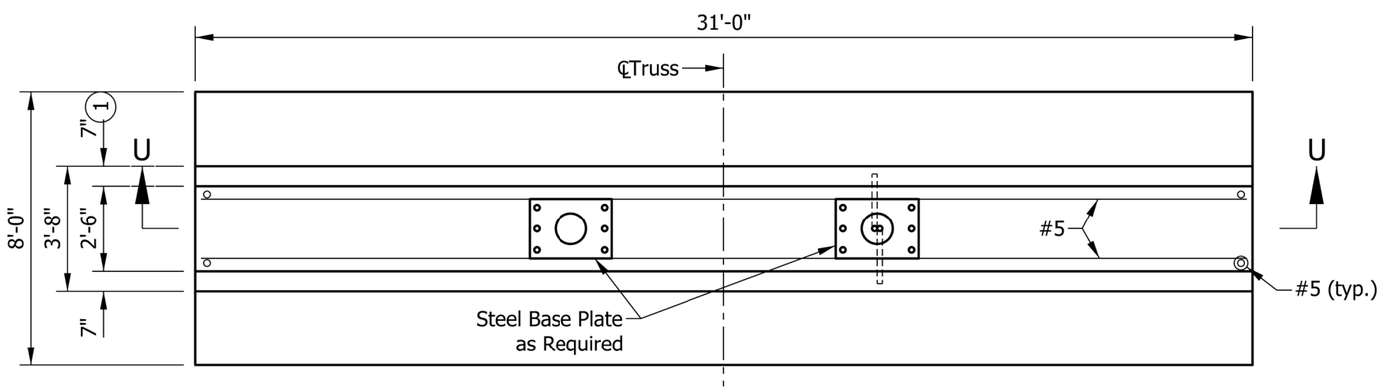

PLAN

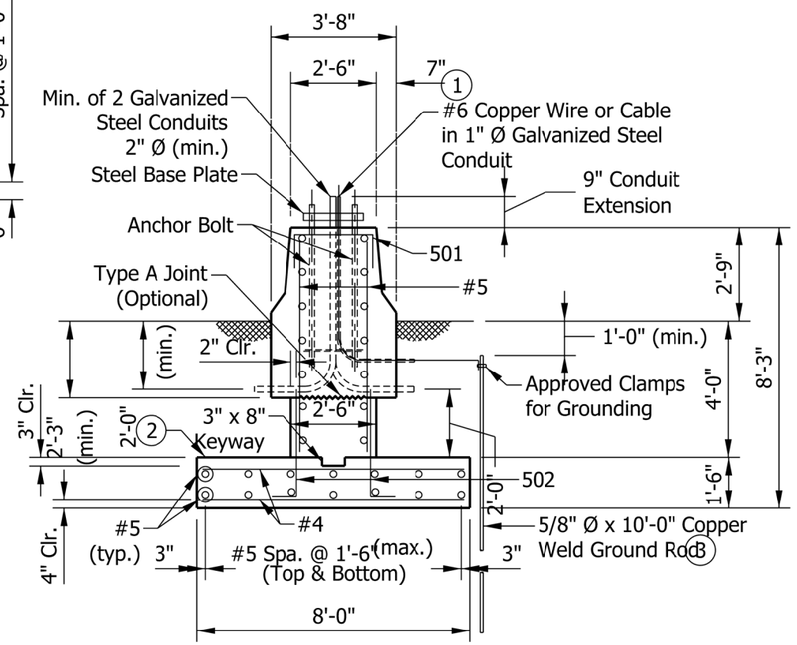

SECTION V-V

NOTES:

1. See Standard Drawing E 602-CCMB-03 for barrier wall width transition.
2. Top of the footing shall be a minimum of 4 ft. 0 in. below the pavement or ground surface.
3. Only one ground rod per structure is required.

INDIANA DEPARTMENT OF TRANSPORTATION

SIGN BOX TRUSS STRUCTURE EXTENDED SPAN
TYPE F, G, H SPREAD FOUNDATION
AT 33" CONCRETE BARRIER WALL

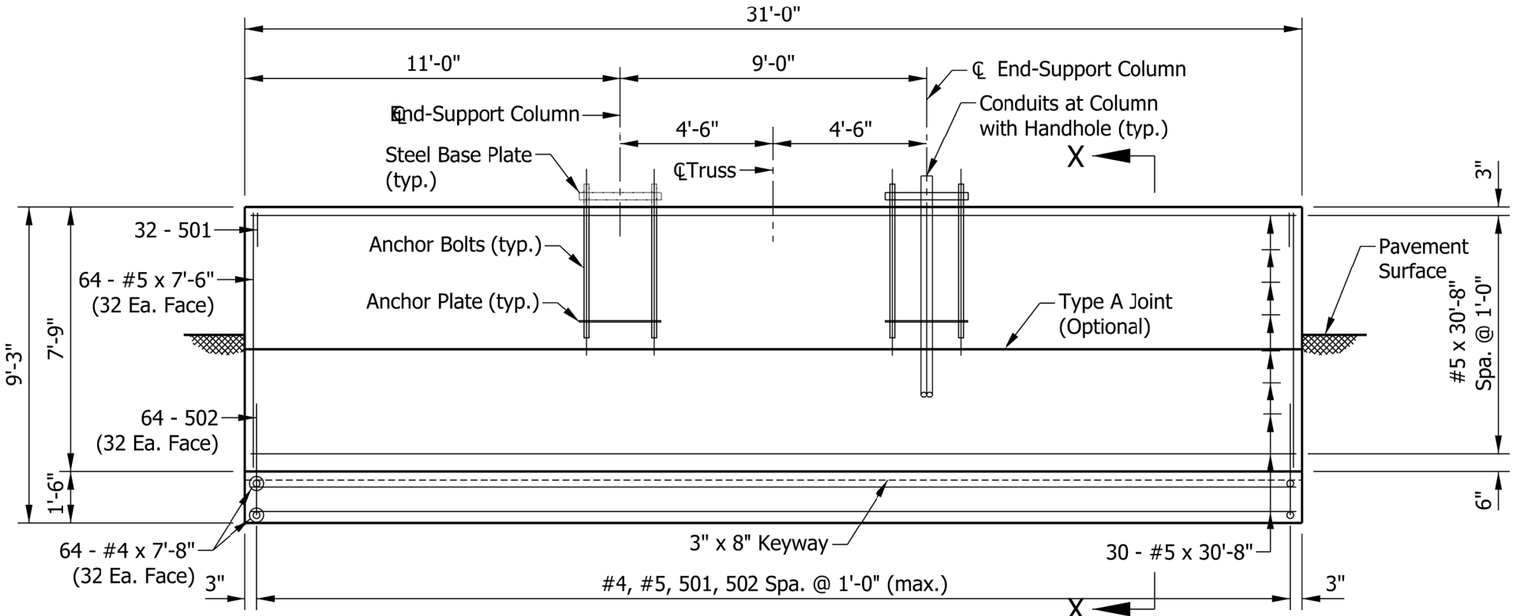

SECTION W-W

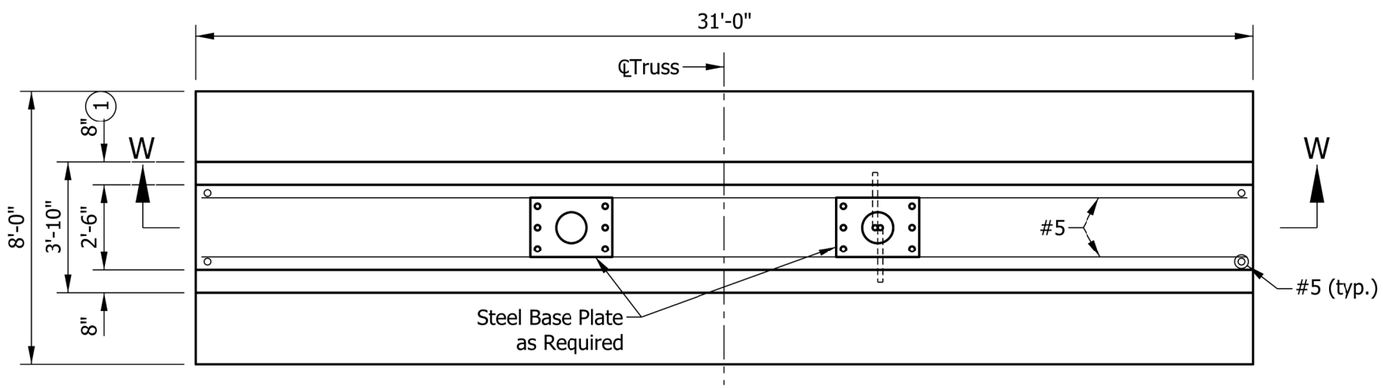

PLAN

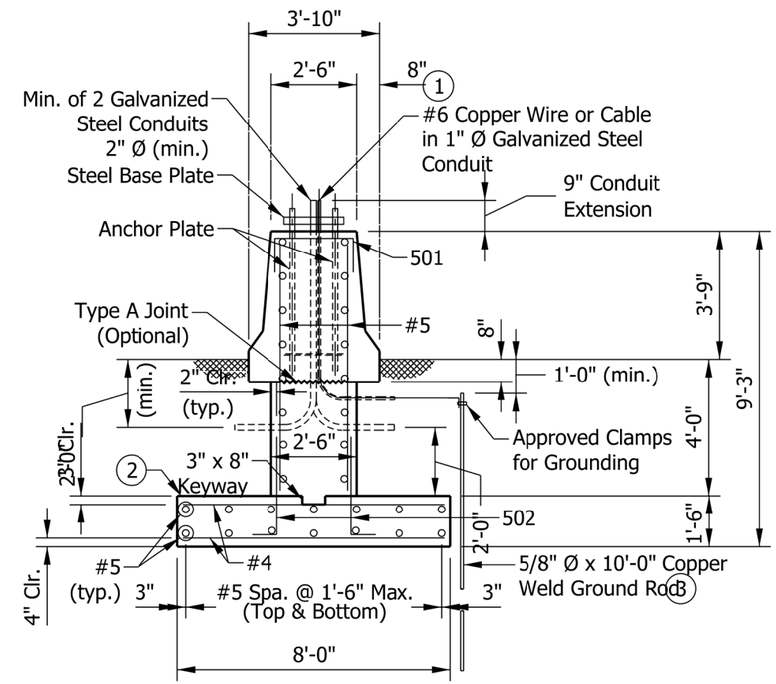

SECTION X-X

NOTES:

1. See Standard Drawing E 602-CCMB-03 for barrier wall width transition.
2. Top of the footing shall be a minimum of 4 ft. 0 in. below the pavement or ground surface.
3. Only one ground rod per structure is required.

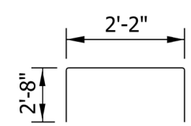

501 x 7'-6"

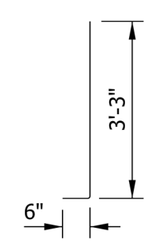

502 x 3'-9"

INDIANA DEPARTMENT OF TRANSPORTATION

SIGN BOX TRUSS STRUCTURE EXTENDED SPAN
TYPE F, G, H SPREAD FOUNDATION
AT 45" CONCRETE BARRIER WALL

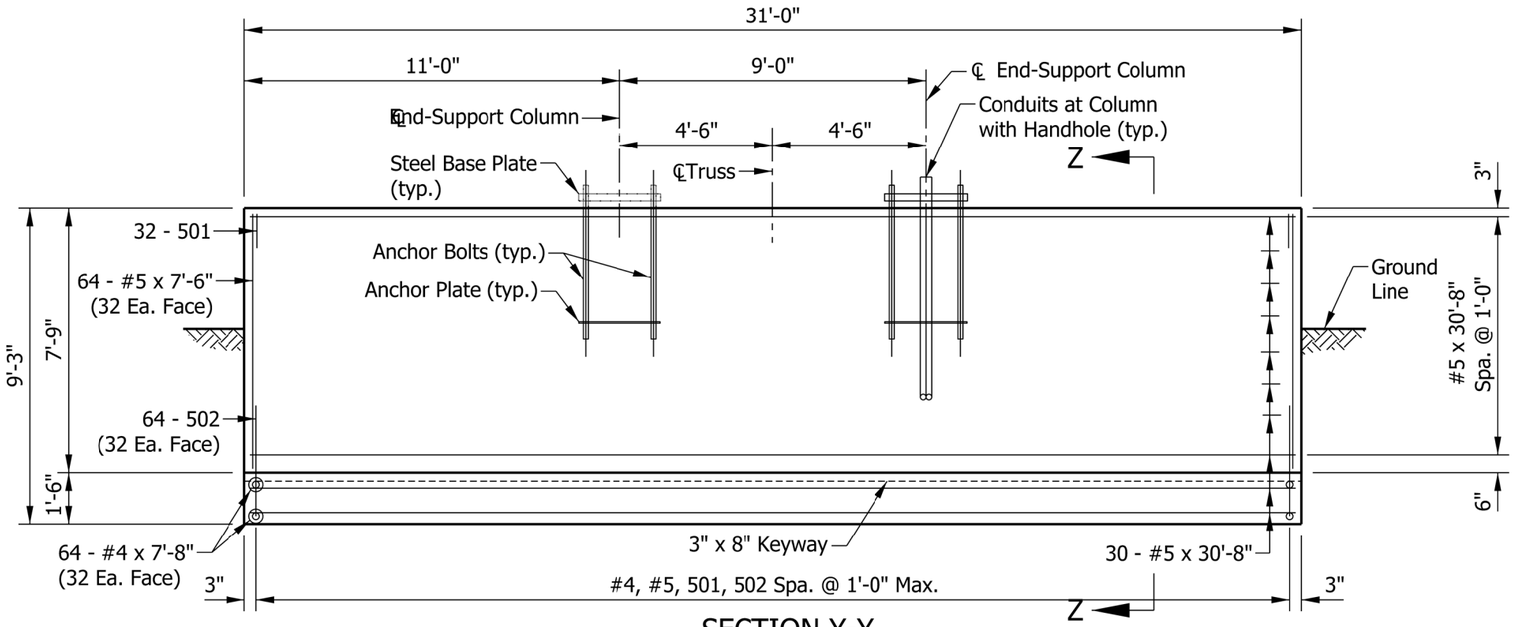

SECTION Y-Y

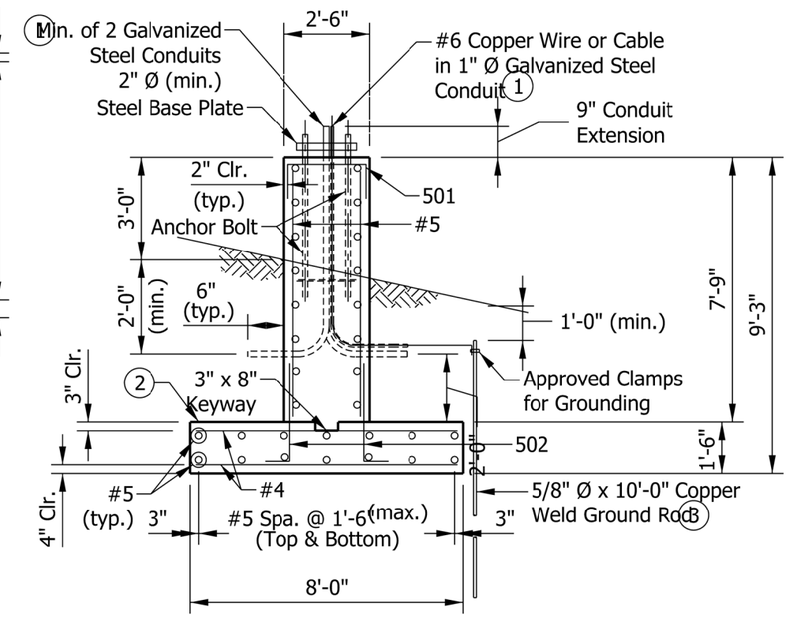

SECTION Z-Z

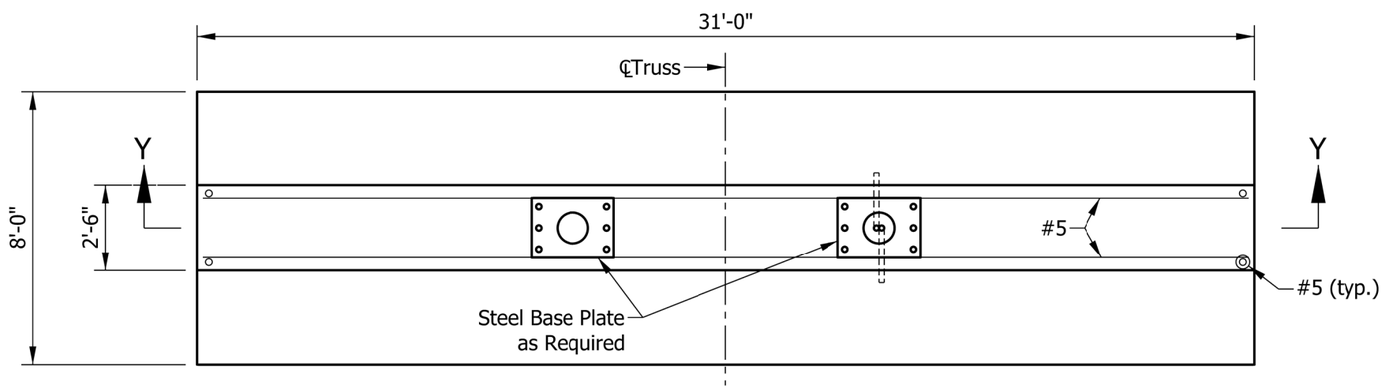

PLAN

NOTES:

(1) Top of the footing shall be a minimum of 4 ft. 0 in. below the pavement or ground surface.

(2) Only one ground rod per structure is required.

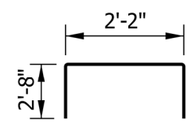

501 x 7'-6"

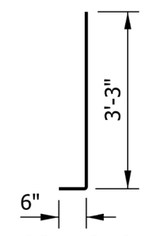

502 x 3'-9"

INDIANA DEPARTMENT OF TRANSPORTATION

SIGN BOX TRUSS STRUCTURE EXTENDED SPAN
TYPE F, G, H SPREAD FOUNDATION
FOR MEDIAN OR SHOULDER, 36" HEIGHT

SPREAD FOUNDATION AT 33" CONCRETE BARRIER WALL			
EPOXY-COATED REINFORCING BARS			
MARK OR SIZE	NO. OF BARS	LENGTH	WEIGHT
501	32	7'-6"	
502	64	3'-9"	
#5	64	6'-6"	
#5	28	30'-8"	
Total #5			1830 LBS
#4	64	7'-8"	
Total #4			328 LBS
Total Epoxy-Coated Reinforcing Bars			2158 LBS
CONCRETE, CLASS A			
Total Concrete, Class A			37.0 CYS
MISCELLANEOUS			
Surface Seal			28.5 SYS

SPREAD FOUNDATION AT 45" CONCRETE BARRIER WALL			
EPOXY-COATED REINFORCING BARS			
MARK OR SIZE	NO. OF BARS	LENGTH	WEIGHT
501	32	7'-6"	
502	64	3'-9"	
#5	64	7'-6"	
#5	30	30'-8"	
Total #5			1961 LBS
#4	64	7'-8"	
Total #4			328 LBS
Total Epoxy-Coated Reinforcing Bars			2289 LBS
CONCRETE, CLASS A			
Total Concrete, Class A			38.9 CYS
MISCELLANEOUS			
Surface Seal			35.4 SYS

SPREAD FOUNDATION FOR MEDIAN OR SHOULDER, 36" HEIGHT			
EPOXY-COATED REINFORCING BARS			
MARK OR SIZE	NO. OF BARS	LENGTH	WEIGHT
501	32	7'-6"	
502	64	3'-9"	
#5	64	7'-6"	
#5	30	30'-8"	
Total #5			1961 LBS
#4	64	7'-8"	
Total #4			328 LBS
Total Epoxy-Coated Reinforcing Bars			2289 LBS
CONCRETE, CLASS A			
Total Concrete, Class A			36.1 CYS
MISCELLANEOUS			
Surface Seal			29.2 SYS

INDIANA DEPARTMENT OF TRANSPORTATION

SIGN BOX TRUSS STRUCTURE EXTENDED SPAN
TYPE F, G, H SPREAD FOUNDATIONS
QUANTITIES

Eff. for Lettings on or After 03-01-20

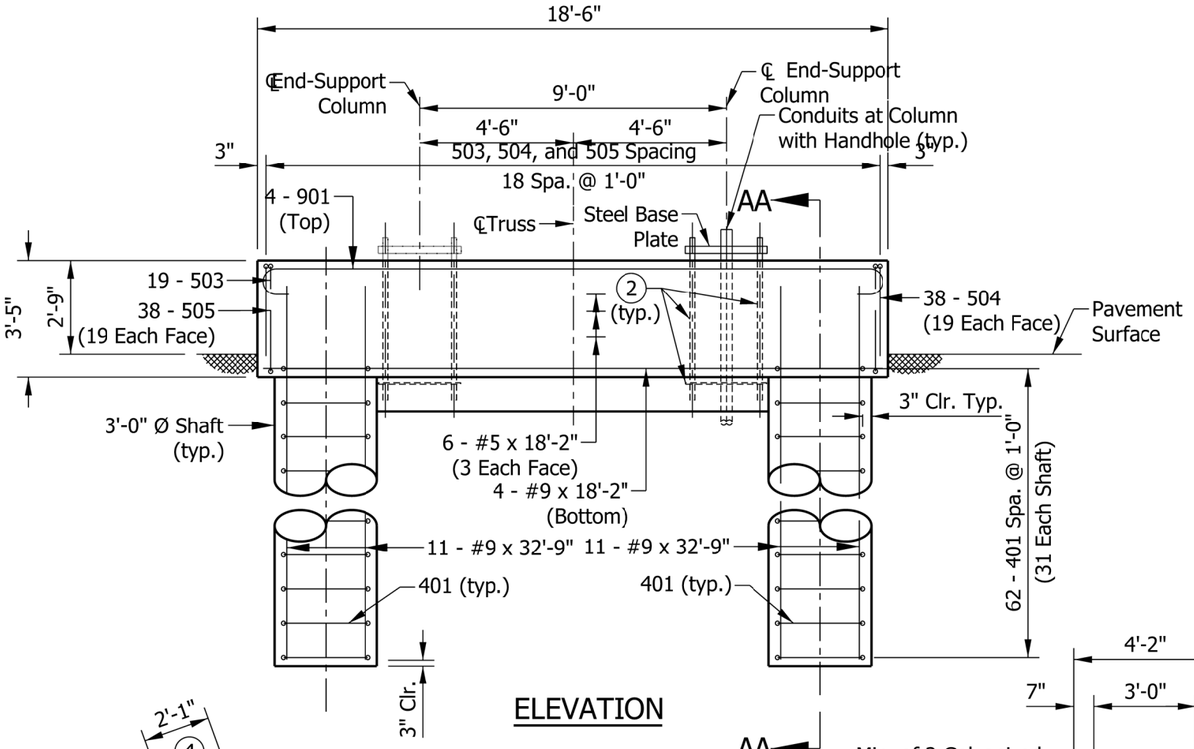

ELEVATION

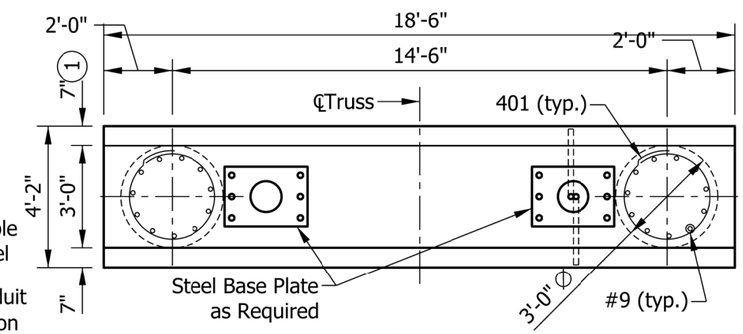

PLAN

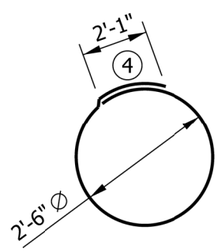

401 x 10'-0"

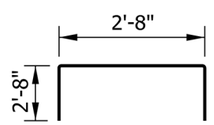

503 x 8'-0"

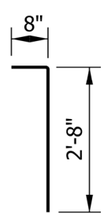

504 x 3'-4"

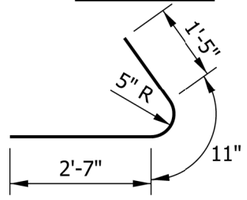

505 x 4'-11"

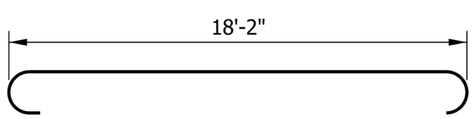

901 x 20'-8"

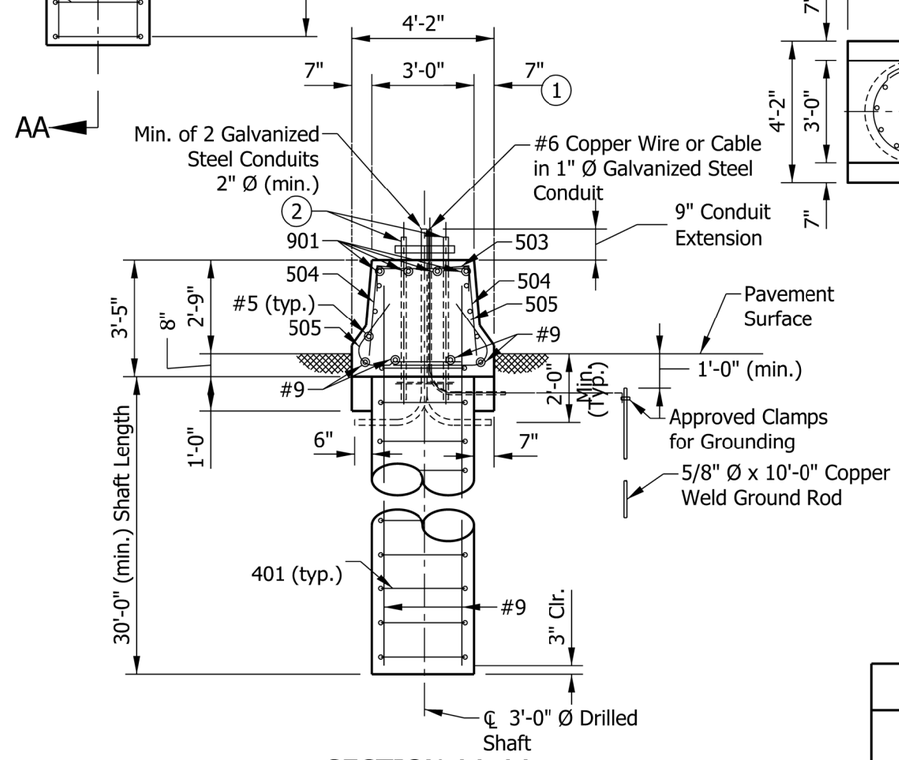

SECTION AA-AA

NOTES:

1. See Standard Drawing E 602-CCMB-03 for barrier wall width transition.
2. See sheet 13 for anchor bolt and anchor plate details.
3. See Standard Drawing E 703-BRST-01 for reinforcing-bar bending details and notes.
4. Lap splices must be staggered around shaft.

INDIANA DEPARTMENT OF TRANSPORTATION

SIGN BOX TRUSS STRUCTURE EXTENDED SPAN
TYPE F, G, H ALTERNATE DRILLED SHAFT
FOUNDATION AT 33" CONCRETE BARRIER WALL

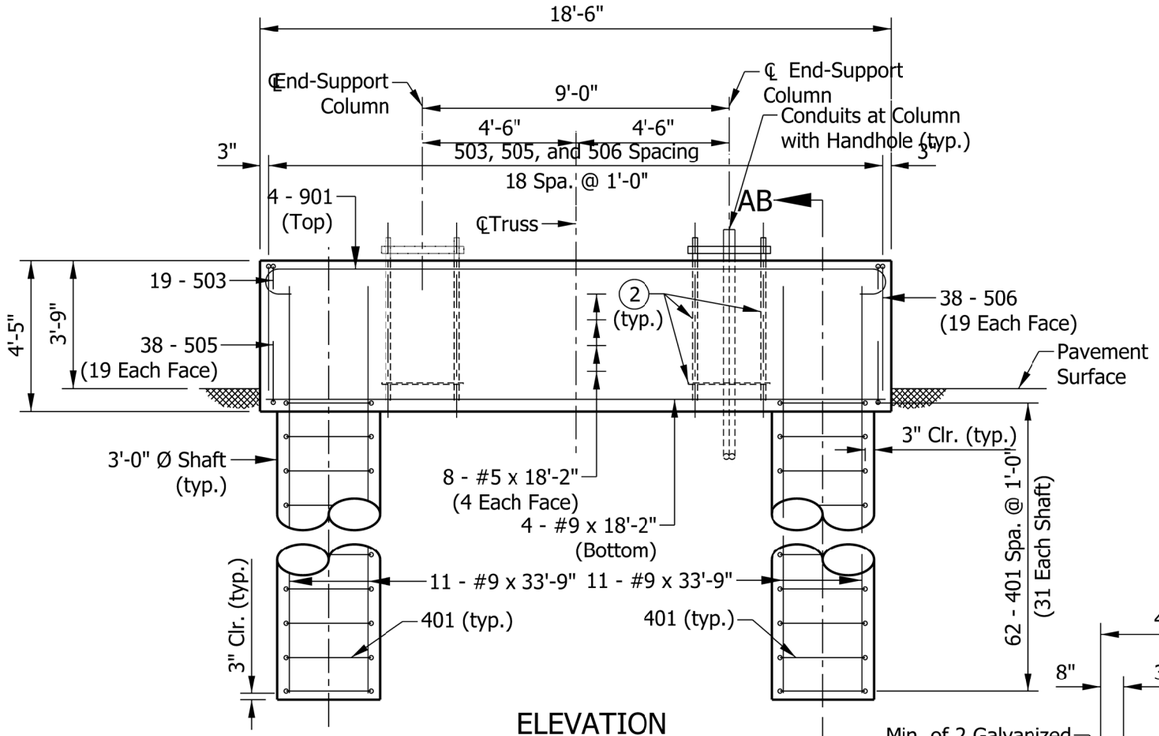

ELEVATION

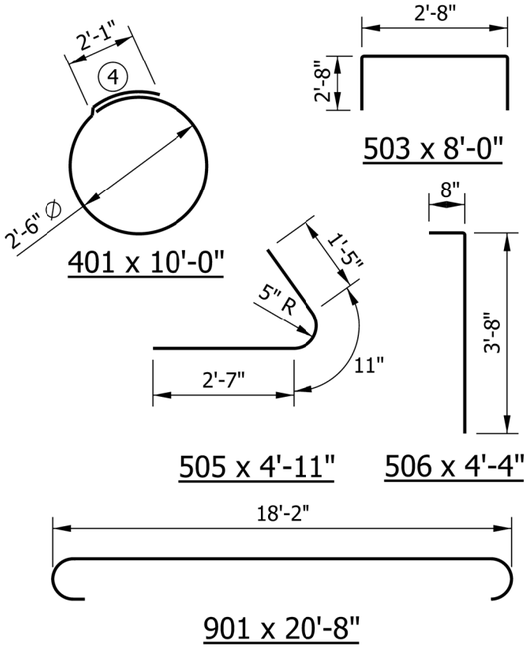

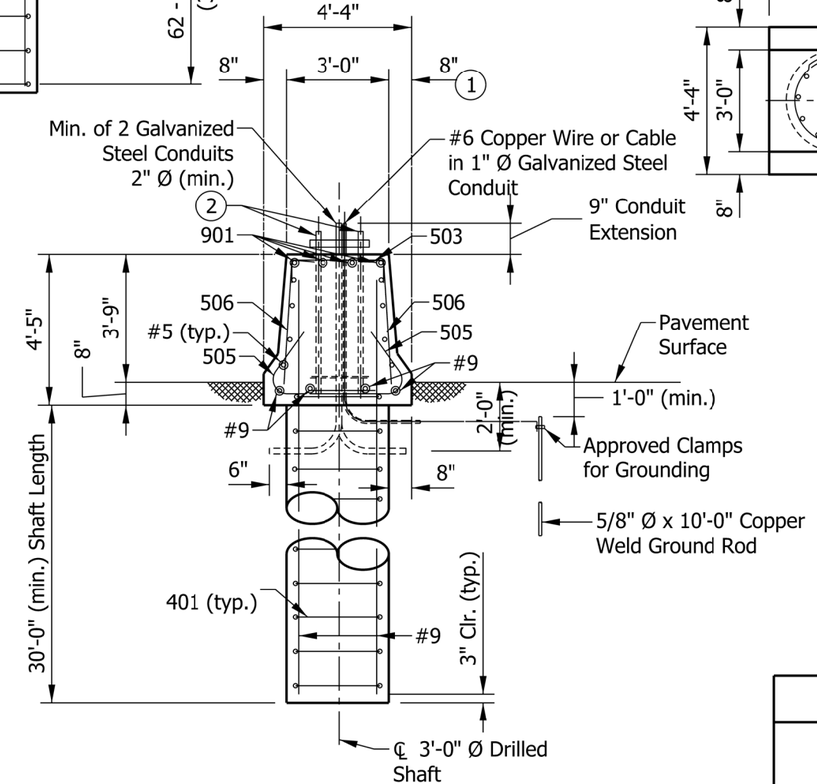

SECTION AB-AB

NOTES:

1. See Standard Drawing E 602-CCMB-03 for barrier wall width transition.
2. See sheet 13 for anchor bolt and anchor plate details.
3. See Standard Drawing E 703-BRST-01 for reinforcing-bar bending details and notes.
4. Lap splices must be staggered around shaft.

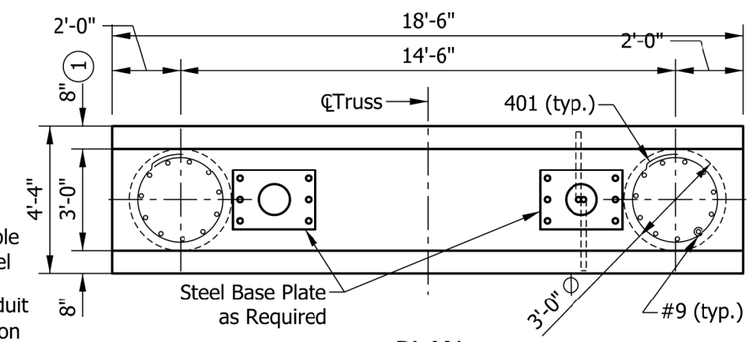

PLAN

INDIANA DEPARTMENT OF TRANSPORTATION

SIGN BOX TRUSS STRUCTURE EXTENDED SPAN
TYPE F, G, H ALTERNATE DRILLED SHAFT
FOUNDATION AT 45" CONCRETE BARRIER WALL

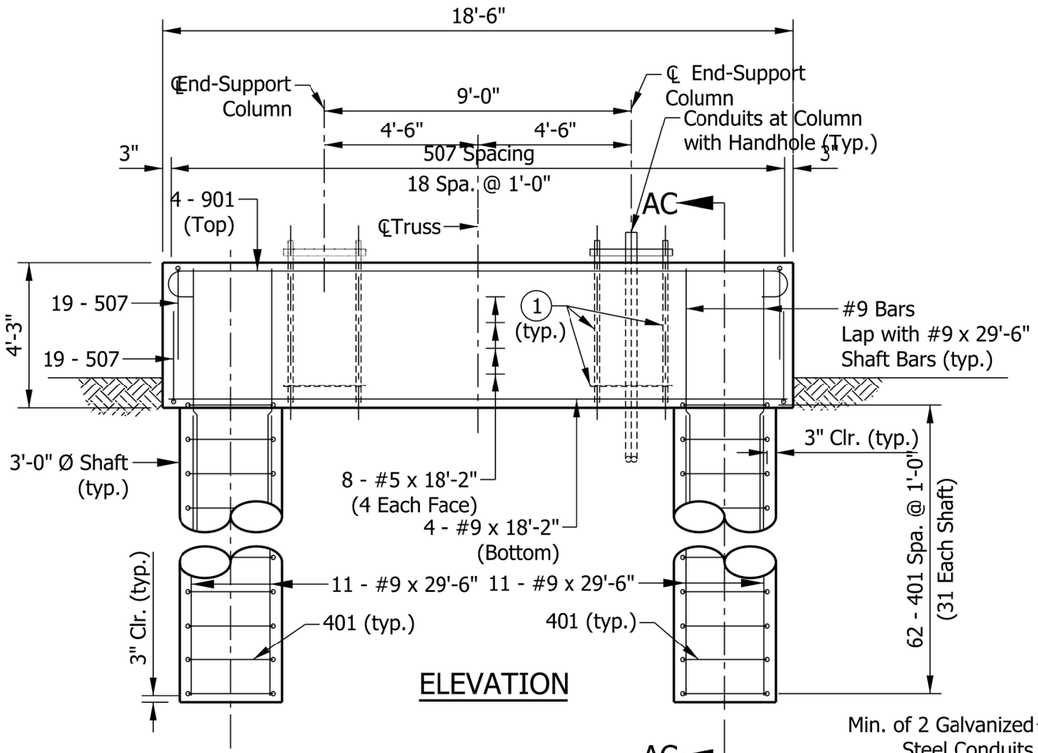

ELEVATION

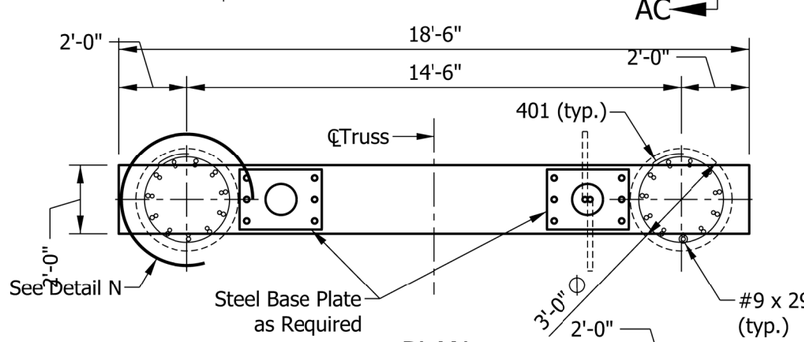

PLAN

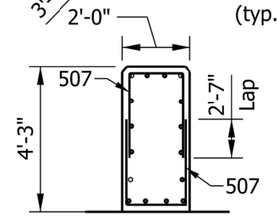

DETAIL O

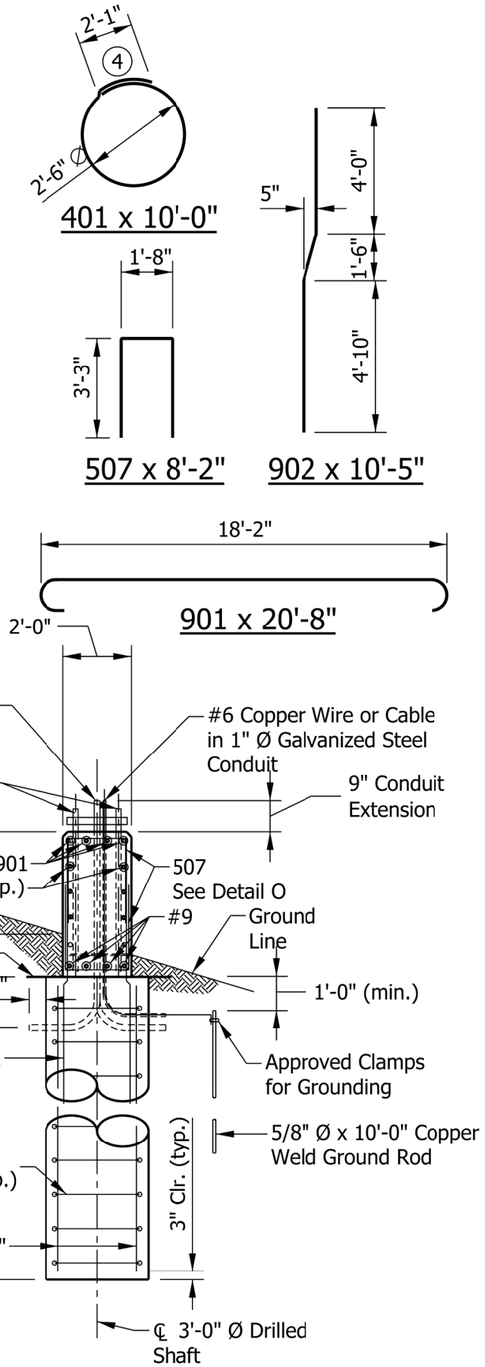

SECTION AC-AC

NOTES:

1. See sheet 13 for anchor bolt and anchor plate details.
2. See Standard Drawing E 703-BRST-01 for reinforcing-bar bending details and notes.
3. Top of foundation shall be level.
4. Lap splices must be staggered around shaft.

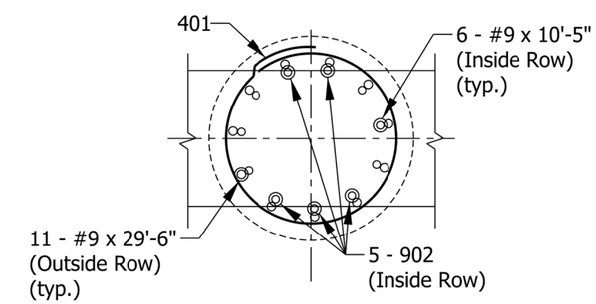

DETAIL N

INDIANA DEPARTMENT OF TRANSPORTATION

SIGN BOX TRUSS STRUCTURE EXTENDED SPAN TYPE F, G, H ALTERNATE DRILLED SHAFT FOUNDATION FOR MEDIAN OR SHOULDER, 36" HEIGHT

ALTERNATE DRILLED SHAFT FOUNDATION AT 33" CONCRETE BARRIER WALL			
EPOXY-COATED REINFORCING BARS			
MARK OR SIZE	NO. OF BARS	LENGTH	WEIGHT
901	4	20'-8"	
#9	4	18'-2"	
#9	22	32'-9"	
Total #9			2978 LBS
503	19	8'-0"	
504	38	3'-4"	
505	38	4'-11"	
#5	6	18'-2"	
Total #5			599 LBS
401	62	10'-0"	
Total #4			415 LBS
Total Epoxy-Coated Reinforcing Bars			3992 LBS
CONCRETE, CLASS A			
Total Concrete, Class A			25.2 CYS
MISCELLANEOUS			
Surface Seal			17.6 SYS

ALTERNATE DRILLED SHAFT FOUNDATION AT 45" CONCRETE BARRIER WALL			
EPOXY-COATED REINFORCING BARS			
MARK OR SIZE	NO. OF BARS	LENGTH	WEIGHT
901	4	20'-8"	
#9	4	18'-2"	
#9	22	33'-9"	
Total #9			3053 LBS
503	19	8'-0"	
505	38	4'-11"	
506	38	4'-4"	
#5	8	18'-2"	
Total #5			677 LBS
401	62	10'-0"	
Total #4			415 LBS
Total Epoxy-Coated Reinforcing Bars			4145 LBS
CONCRETE, CLASS A			
Total Concrete, Class A			26.0 CYS
MISCELLANEOUS			
Surface Seal			21.7 SYS

ALTERNATE DRILLED SHAFT FOUNDATION FOR MEDIAN OR SHOULDER, 36" HEIGHT			
EPOXY-COATED REINFORCING BARS			
MARK OR SIZE	NO. OF BARS	LENGTH	WEIGHT
901	4	20'-8"	
902	10	10'-5"	
#9	4	18'-2"	
#9	12	10'-5"	
#9	22	29'-6"	
Total #9			3514 LBS
507	38	8'-2"	
#5	8	18'-2"	
Total #5			475 LBS
401	62	10'-0"	
Total #4			415 LBS
Total Epoxy-Coated Reinforcing Bars			4404 LBS
CONCRETE, CLASS A			
Total Concrete, Class A			21.5 CYS
MISCELLANEOUS			
Surface Seal			21.6 SYS

INDIANA DEPARTMENT OF TRANSPORTATION

SIGN BOX TRUSS STRUCTURE EXTENDED SPAN
TYPE F, G, H ALTERNATE DRILLED SHAFT
FOUNDATIONS QUANTITIES

Eff. for Lettings on or After 03-01-20

INDIANA DEPARTMENT OF TRANSPORTATION
Driving Indiana's Economic Growth

Traffic Management Center
8620 East 21st Street
Indianapolis, Indiana 46219

PHONE: (317) 899-8626
FAX: (317) 898-0897

Eric Holcomb, Governor
Joe McGuinness, Commissioner

February 4, 2020

TO: Jim Poturalski, Senior Director of Engineering and Research
Division of Research and Development

THRU: Runfa Shi, Project Manager
INDOT

FROM: Seth Schickel, Designer
HNTB

SUBJECT: Interstate Highway Congestion Policy Exception Request
Interchange Reconstruction
Northbound and Southbound I-65 from Calvary St. to Meridian St. (RP 110.6 to 113.0) &
Westbound and Eastbound I-70 from Calvary St. to Roosevelt Ave. (RP 81.1 to RP 84.2)
in Marion County
Des. No. 1592385

We have reviewed the attached policy exception request and concur with the analyses presented.

IHCP Allowable Closure: Weekend or Nighttime Only (I-70 & I-65 south of NS)
Nighttime only (I-65 North of NS)

Requested Closures: West Leg: I-65 between North Split (RP 112.4) and West St. (RP 113.1)
- 1-to-2 lanes closed between 7:00 pm – 5:00 am
- All lanes open 5:00 am – 7:00 pm

East Leg: I-70 between North Split (RP 83.3) and Keystone Ave (RP 84.4)
- 2-to-4 lanes closed between 7:00 pm – 5:00 am
- All lanes open 5:00 am – 7:00 pm

South Leg: I-65/I-70:
- Seg. A: Maryland St. (I-65 RP 111.1) to Michigan Rd (I-65 RP 111.7)
  - 2-to-3 lanes closed between 7:00 pm – 5:00 am
  - All lanes open 5:00 am – 7:00 pm
- Seg. B: South Split (I-65 RP 110.4) to Fletcher Ave (I-65 RP 110.7)
  - 1-to-3 lanes closed between 7:00 pm – 5:00 am
  - All lanes open 5:00 am – 7:00 pm

Minimum Open Lanes: 1 lane open in both directions

Anticipated Start of Closures: April 2021

Expected Duration of Closure: 560 days

Lane Width: 11 ft.

Shoulder Width: 2 ft. mi.

Type of barrier used: Temporary Barrier and Drums

Analyses have been prepared which indicate that queues beyond policy limits are not anticipated due to the requested work. The reason for the IHCP Exception Request instead is due to the proposed restriction schedule between 7:00pm and 5:00 am. The IHCP only permits lane restrictions in these segments between 9:00pm and 6:00 am. Please see the attached analysis for further details on queue modeling.

Policy Exception Approved:

_____ _____

Jim Poturalski, Senior Director of Engineering & Research
Division of Research & Development

Date

Enclosures: Policy Exception Request, Queue Analysis Segment A, Queue Analysis Segment B

cc: JOHN MCGREGOR, Operations Director, Traffic Management Division, Indianapolis TMC
MISCHA A. KACHLER, Supervisor, Work Zone Safety Section, Indianapolis TMC
GREG RICHARDS, Supervisor, Traffic Control Systems Section, Indianapolis TMC
JAMES COLONIS, Director, Construction Division, Greenfield District
VALERIE COCKRUM, Director, Technical Services Division, Greenfield District
PATRICK SZEWCZAK, Director, Highway Maintenance Division, Greenfield District
PERRY KELLER, Manager, Design, Production Division, Greenfield District
LOUIS LARACUENTE, Manager, Traffic, Technical Services Division, Greenfield District
RUNFA SHI, Project Manager, Central Office, INDOT
AUSTIN HASTINGS, PE, Project Manager, HNTB Corporation
JORDAN WILLIAMS, PE, PTOE, Transportation Engineer, HNTB Corporation

This IHCP exception approval supplements the Interstate Closure request approved by FHWA. Lane closures on interstate highways outside of the project area to allow for overhead sign modifications associated with detours and other informational signage will be allowed between the hours of 10 pm to 5 am any night of the week. A minimum of one lane shall remain open during these hours and only lanes required to be closed for this overhead work shall be closed. Twenty minute short term closures in the project limits for overhead work are allowed under this IHCP exception approval (in lieu of rolling closures). The "Minimum Number of Lanes Open" charts that are part of this IHCP exception approval apply at specific time periods shown except in areas where fewer than the number of open lanes entering or exiting a movement exist due to approved movement closures. In those locations and time periods, the minimum number of lanes open should be the lesser of (i) the minimum number of lanes in the chart or (ii) the number of open lanes during approved movement closures.
JMP 2/5/2020

INDIANA DEPARTMENT OF TRANSPORTATION
Driving Indiana's Economic Growth

Traffic Management Center
8620 East 21st Street
Indianapolis, Indiana 46219

PHONE: (317) 899-8610
FAX: (317) 898-0897

Eric Holcomb, Governor
Joe McGuinness, Commissioner

INTERSTATE HIGHWAYS CONGESTION POLICY

EXCEPTION REQUEST ANALYSIS AND JUSTIFICATION

RE: Interchange Reconstruction
Northbound and Southbound I-65 from Calvary St. to Meridian St. (RP 110.6 to 113.0) &
Westbound and Eastbound I-70 from Calvary St. to Roosevelt Ave. (RP 81.1 to RP 84.2)
in Marion County
Des. No. 1592385

NEED FOR WORK

The purpose of this project is to improve the condition of the pavement and bridges and improve operational and safety issues within the project limits. This will be accomplished by a full reconstruction of the pavement and bridges within the project limits. This work is planned between April 2021 and November 2022.

PLANNED CLOSURES/RESTRICTIONS

It is necessary to close varying lanes of traffic during construction in the on each leg of the I-65/I-70 "North Split" Interchange. These closures are required to perform routine maintenance type activities. Lane closures are restricted to evenings starting at 7:00 pm, and lasting until 5:00 am. All lanes of traffic will be open between 5:00 am and 7:00 pm. Lane closures are as follows:

West Leg: I-65 between North Split (RP 112.4) and West St. (RP 113.1)
- 1-to-2 lanes closed between 7:00 pm – 5:00 am

East Leg: I-70 between North Split (RP 83.3) and Keystone Ave (RP 84.4)
- 2-to-4 lanes closed between 7:00 pm – 5:00 am

South Leg: I-65 / I-70
- Segment A: Maryland St. (I-65 RP 111.1) to Michigan Rd (I-65 RP 111.7)
  - 2-to-3 lanes closed between 7:00 pm – 5:00 am
- Segment B: South Split (I-65 RP 110.4) to Fletcher Ave (I-65 RP 110.7)
  - 1-to-3 lanes closed between 7:00 pm – 5:00 am

Please refer to the attached Appendix items for detailed lane closure schedule. These closures are anticipated to begin in April 2021 and last until Project completion, no later than November 2022.

ANALYSIS

Traffic impacts due to closures were analyzed using INDOT's Queuing Analysis spreadsheet. The traffic volumes used in the analysis were obtained from INDOT Traffic Count Database System website (http://indot.ms2soft.com/TCDS/). For the West Leg, counts were taken from Location ID's 971341 and 971344 in June, 2016. For the East Leg, counts were taken from Location ID 973190 in June, 2016. For the South Leg Segment A, counts were taken from Location ID's 971318 and 971330 in April, 2018, and May, 2014, respectively. For the South Leg Segment B, counts were taken from Location ID 97V1310 in March. 2018. The work zone capacity used in the analysis is the Highway Capacity Manual's typical value, adjusted for the proximity of the work to the travel lane and varies depending on the number of pre-work vs. post-work lanes. As such, the resulting at-work capacity per lane varies between 1,568 and 1,815 PCE/Hr/Ln. This capacity corresponds to a 11 ft. lane width. A 1% Annual Growth Factor was used in the analysis.

The analyses indicate that queues beyond policy limits are not anticipated due to the requested work. The reason for the IHCP Exception Request instead is due to the proposed restriction schedule between 7:00pm and 5:00 am. The IHCP only permits lane restrictions in these segments between 9:00pm and 6:00 am. Please see the attached analysis for further details on queue modeling. INDOT's construction staff has done several closures similar to this and will be working closely with the TMC to ensure that minimal congestion in the work zone is achieved.

SELECTED WORK SCHEDULE

West Leg: I-65 between North Split (RP 112.4) and West St. (RP 113.1)

- 1-to-2 lanes closed between 7:00 pm – 5:00 am

East Leg: I-70 between North Split (RP 83.3) and Keystone Ave (RP 84.4)

- 2-to-4 lanes closed between 7:00 pm – 5:00 am

South Leg: I-65 / I-70

- Segment A: Maryland St. (I-65 RP 111.1) to Michigan Rd (I-65 RP 111.7)
  - 2-to-3 lanes closed between 7:00 pm – 5:00
- Segment B: South Split (I-65 RP 110.4) to Fletcher Ave (I-65 RP 110.7)
  - 1-to-3 lanes closed between 7:00 pm – 5:00

The hours shown in the selected work schedule represent an extension of the hours already approved for closure in the Interstate Highway Congestion Policy. The time extensions proposed are a result of the queuing analysis; they will allow an expedited construction schedule and ultimately reduce the overall impact to motorists.

ABBREVIATED TRANSPORTATION MANAGEMENT PLAN (TMP)

The following Abbreviated TMP will be followed throughout the construction of this project:

Traffic Control Plan (TCP) Outline

- The PE/PS (or the Contractor if so designated by the PE/PS) will notify the TMC at least 3-days ahead of any MOT change so that the appropriate ATIS messages (if available) can be displayed to inform motorists of the upcoming closure and for general information concerning the status of traffic operations on the Interstate Highways. The E-mail addresses for these notifications are: indpc@isp.IN.gov and indytmc@indot.IN.gov. The PE/PS (or the Contractor if so designed by the PE/PS) shall call the TMC (317-899-8690x1) immediately prior to implementing any lane or shoulder restriction as a final notification and to provide project contacts / phone numbers that will be available for the duration of the restriction.
- All lane or shoulder restrictions will be closed and/or shifted in accordance with the IMUTCD and INDOT Specifications 105, 107, and 801.
- Unless explicitly stated otherwise in this Approval, Recurring Special Provision 108-C-585, which concerns holiday closures, will be followed.
- PCMS's will be used to warn traffic of the work area and the potential for slow traffic ahead of the work zone.
- Moveable Barrier Wall will be used to shorten the amount of time it takes to set up and tear down the work zone.
- Disincentives for closures outside the approved windows will be detailed in the contract document.

Traffic Operations Plan (TOP)

Lane restriction information will be transmitted by TMC to ITS boards in advance of this area and will notify motorists of the work, well in advance of the closure, as ITS boards are available.

Public Information

Simultaneous to the TMC notification noted above, the PE/PS (or the Contractor if so designated by the PE/PS) shall notify the INDOT District Media Contact responsible for the area of the restriction at least 3-days in advance of the closure. The Media Contacts can be found at www.media.indot.in.gov which redirects to www.in.gov/indot/2364.htm. They will insure that local television news channels, radio stations and newspapers will be notified of this construction. Local commuters will be advised to avoid this area and use alternative local routes if possible. They will also insure that the Indiana Motor Trucking Association is notified to minimize the number of trucks that will use these detour routes.

Prepared by:

Jordan Williams, PE, PTOE
Transportation Engineer
Phone Number: 317.917.5239
Email: jcwilliams@hntb.com

Reviewed by:

Austin Hastings, PE
Project Manager
Phone Number: 317.917.5308
Email: amhastings@hntb.com

Attachment A

Project Map

EASTERN PROJECT LIMIT
Maintains I-65 exit at Meridian/Pennsylvania
No I-70 exit
College Ave
Frank and Judy O'Bannon Soccer Park
I-70 more direct
I-70 to I-65 more direct
Commerce Ave
Pennsylvania St
Delaware St
Alabama St
Central Ave
WESTERN PROJECT LIMIT
Eliminates Pennsylvania ramp weave
Improves I-70 curve
I-65 to Pennsylvania St
Delaware St to I-70
10th St
Improves I-65/I-70 merge
Maintains entrance at Meridian/ Delaware for I-70
No I-65 or C-D entrance
Eliminates Delaware ramp weave
I-65 enters North Split on the right; I-70 enters North Split on the left
Eliminates "big weave" to the south
St Clair St
C-D
to I-70
to I-65
C-D provides local access to Michigan, New York, Ohio, and Fletcher
Pine ramp merges flipped from existing layout
Ramps more direct
Michigan St
Vermont St (pedestrian only)
New York St
Ohio St
E Market St
Washington St
Highland Park
SOUTHERN PROJECT LIMIT
N
LEGEND
MANAGED LANDS
TRAIL
NEW DESIGN
BRIDGE
POSSIBLE RETAINING WALL
C-D COLLECTOR-DISTRIBUTOR
CSX RAILROAD
JULY 2019
Hendricks
Marion
Morgan
Johnson

Attachment B

Interstate and Ramp Closure Map

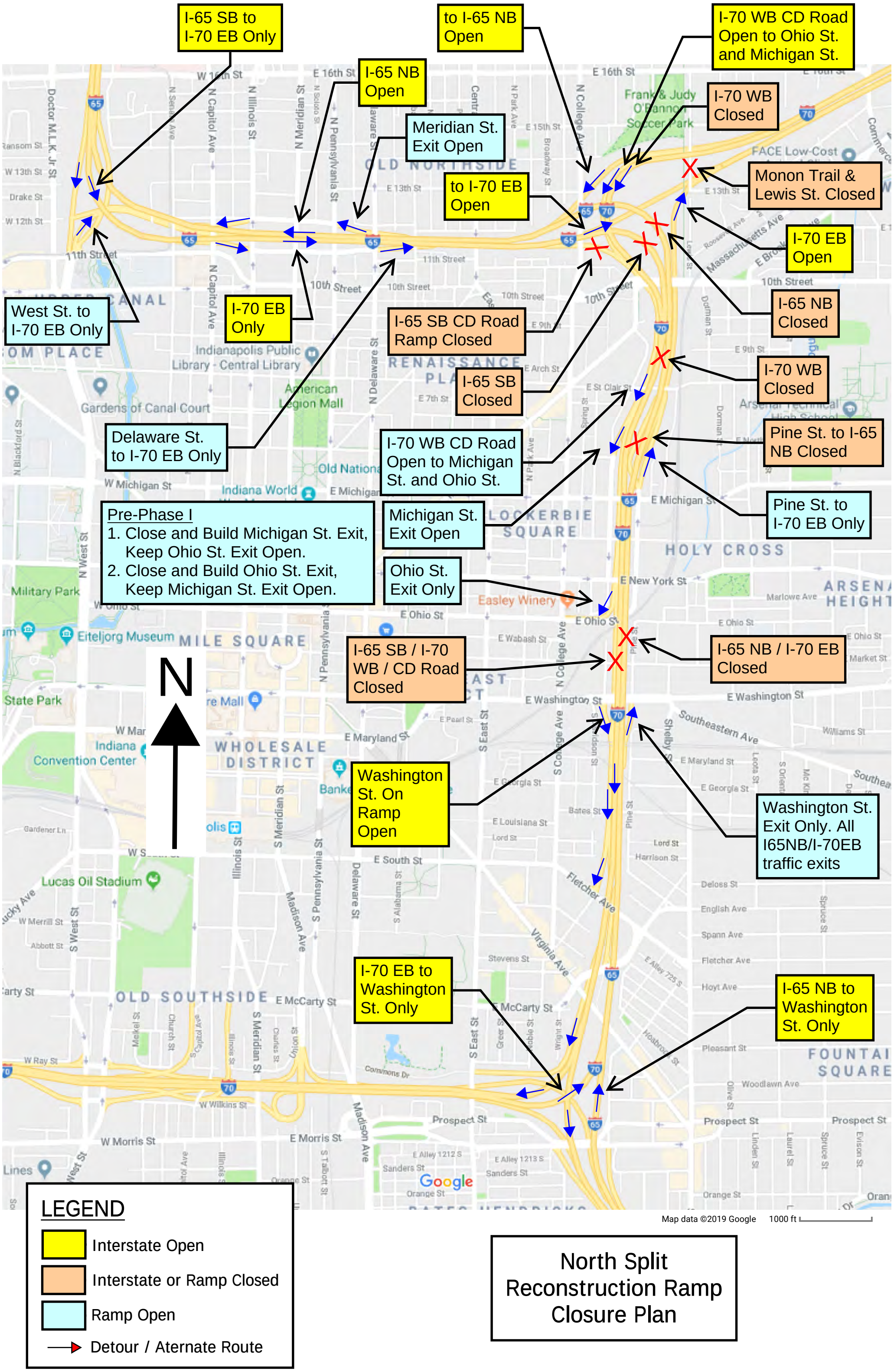
I-65 SB to I-70 EB Only
to I-65 NB Open
I-70 WB CD Road Open to Ohio St. and Michigan St.
I-65 NB Open
I-70 WB Closed
Meridian St. Exit Open
to I-70 EB Open
Monon Trail & Lewis St. Closed
I-70 EB Open
I-65 NB Closed
West St. to I-70 EB Only
I-70 EB Only
I-65 SB CD Road Ramp Closed
I-65 SB Closed
I-70 WB Closed
Pine St. to I-65 NB Closed
Delaware St. to I-70 EB Only
I-70 WB CD Road Open to Michigan St. and Ohio St.
Pine St. to I-70 EB Only
Pre-Phase I
1. Close and Build Michigan St. Exit, Keep Ohio St. Exit Open.
2. Close and Build Ohio St. Exit, Keep Michigan St. Exit Open.
Michigan St. Exit Open
Ohio St. Exit Only
I-65 SB / I-70 WB / CD Road Closed
I-65 NB / I-70 EB Closed
N
Washington St. On Ramp Open
Washington St. Exit Only. All I65NB/I-70EB traffic exits
I-70 EB to Washington St. Only
I-65 NB to Washington St. Only
Map data ©2019 Google
1000 ft
LEGEND
Interstate Open
Interstate or Ramp Closed
Ramp Open
Detour / Aternate Route
North Split Reconstruction Ramp Closure Plan

Attachment C1

Alt 3 Conceptual MOT Plan Phase 1

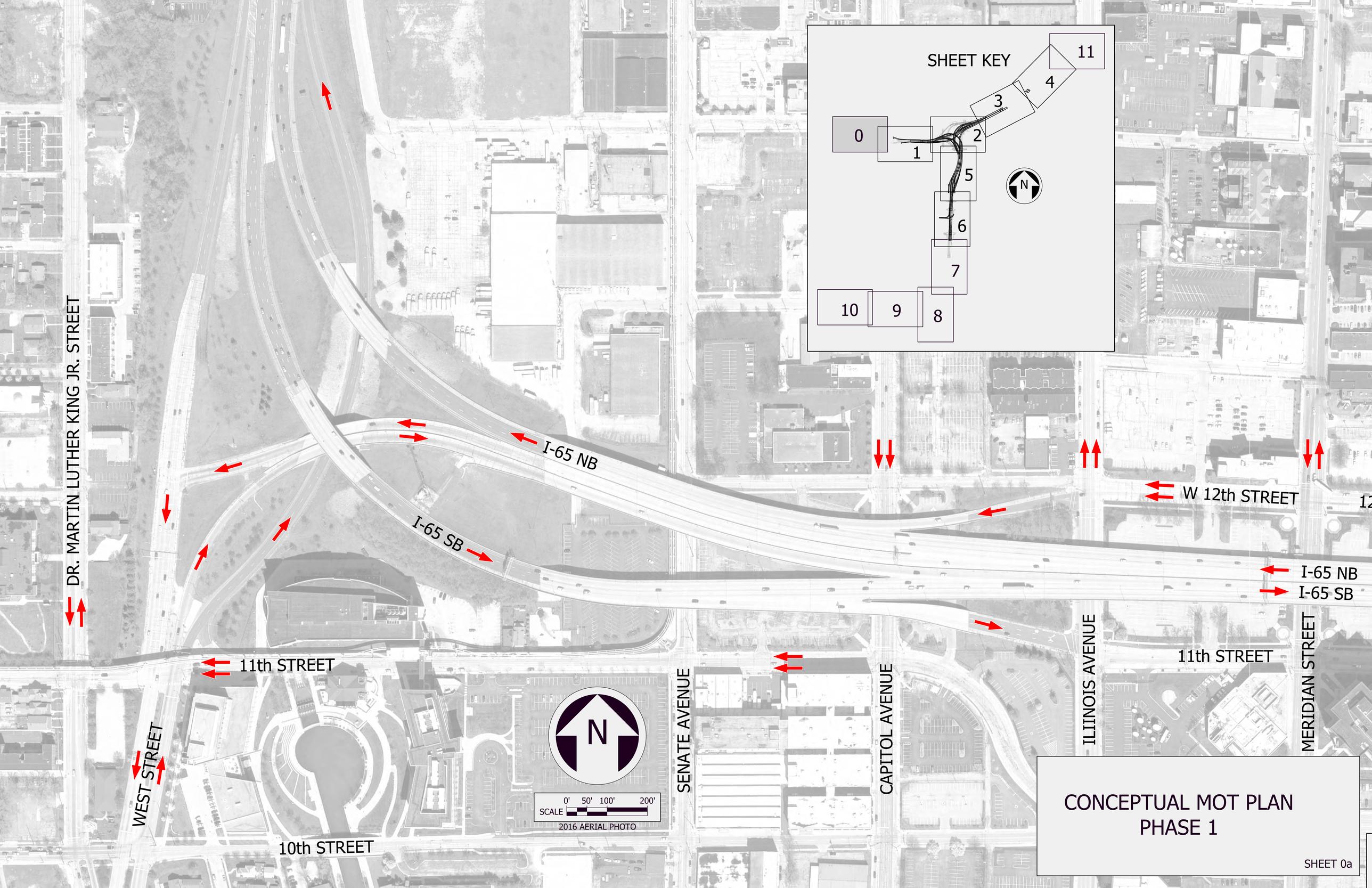
SHEET KEY
0
1
2
3
4
5
6
7
8
9
10
11
N
I-65 NB
I-65 SB
W 12th STREET
DR. MARTIN LUTHER KING JR. STREET
11th STREET
WEST STREET
10th STREET
SENATE AVENUE
CAPITOL AVENUE
ILLINOIS AVENUE
MERIDIAN STREET
SCALE
0' 50' 100' 200'
2016 AERIAL PHOTO
CONCEPTUAL MOT PLAN
PHASE 1
SHEET 0a

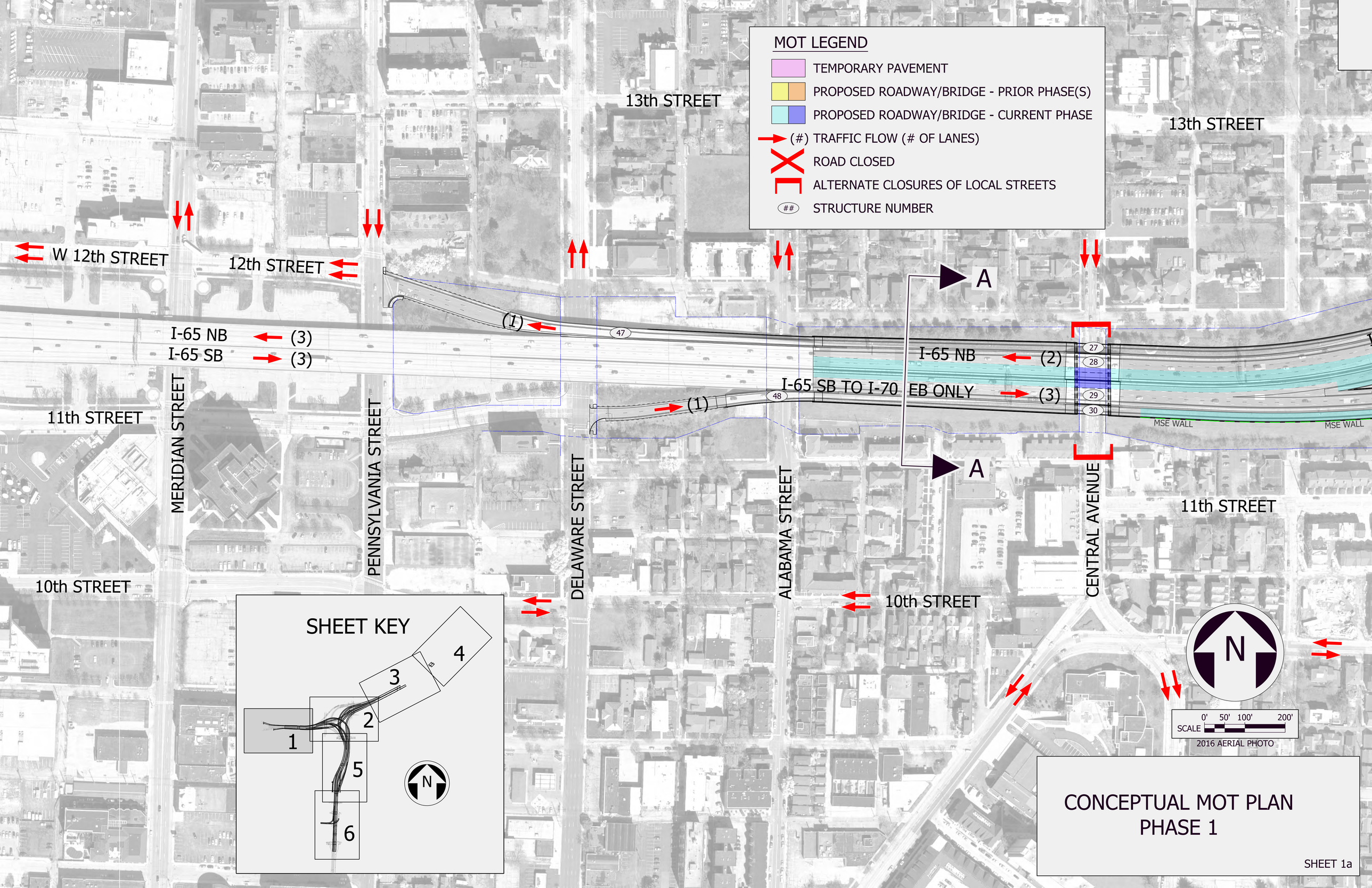
MOT LEGEND
TEMPORARY PAVEMENT
PROPOSED ROADWAY/BRIDGE - PRIOR PHASE(S)
PROPOSED ROADWAY/BRIDGE - CURRENT PHASE
(#) TRAFFIC FLOW (# OF LANES)
ROAD CLOSED
ALTERNATE CLOSURES OF LOCAL STREETS
STRUCTURE NUMBER
13th STREET
13th STREET
W 12th STREET
12th STREET
I-65 NB (3)
I-65 SB (3)
(1)
47
48
(1)
I-65 NB (2)
I-65 SB TO I-70 EB ONLY (3)
27
28
29
30
MSE WALL
MSE WALL
A
A
11th STREET
11th STREET
MERIDIAN STREET
PENNSYLVANIA STREET
DELAWARE STREET
ALABAMA STREET
CENTRAL AVENUE
10th STREET
10th STREET
SHEET KEY
1
2
3
4
5
6
N
N
0' 50' 100' 200'
SCALE
2016 AERIAL PHOTO
CONCEPTUAL MOT PLAN
PHASE 1
SHEET 1a

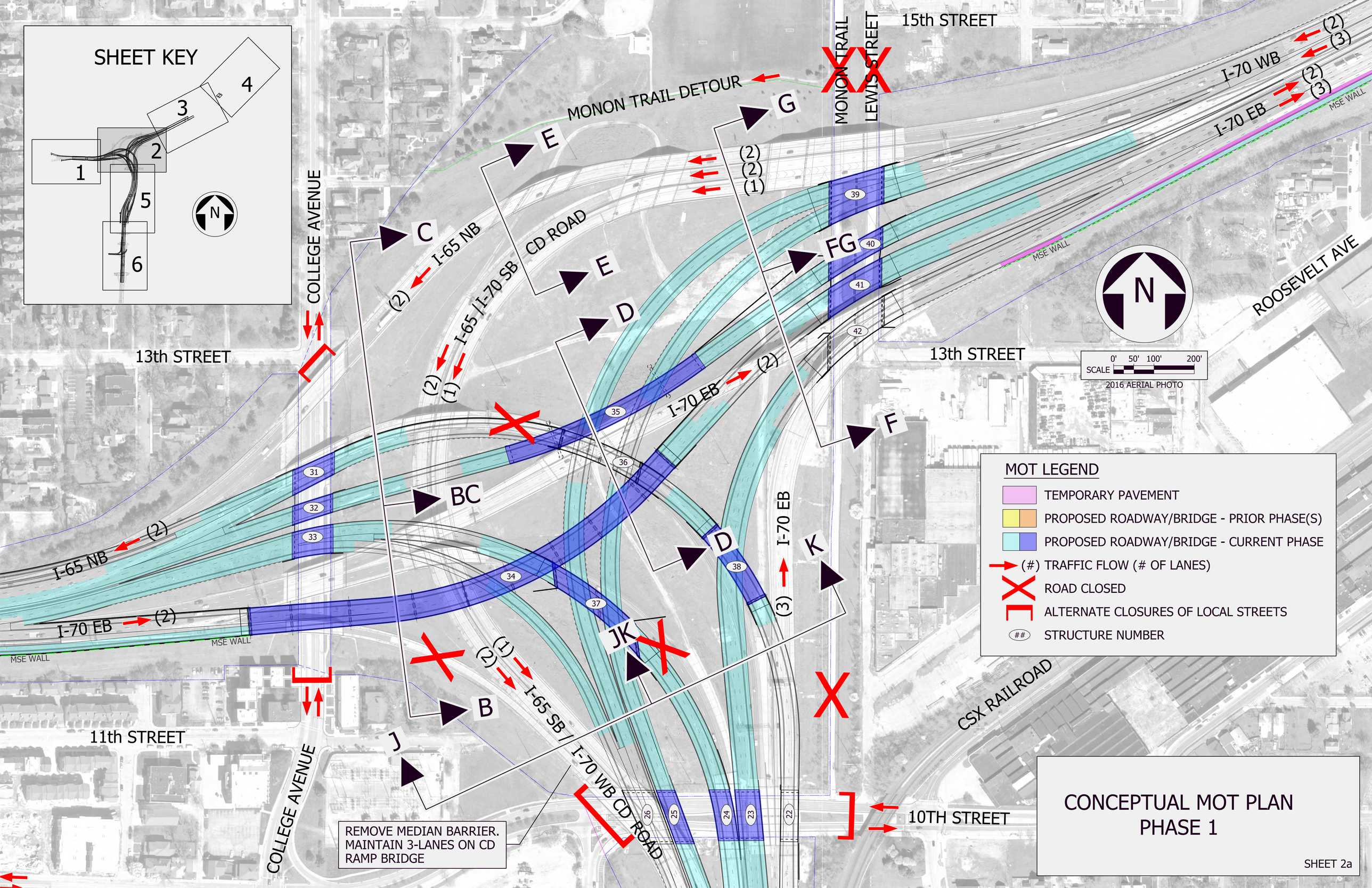
SHEET KEY
1
2
3
4
5
6
N
COLLEGE AVENUE
13th STREET
11th STREET
MONON TRAIL DETOUR
MONON TRAIL
LEWIS STREET
15th STREET
I-65 NB
I-65 | I-70 SB
CD ROAD
I-70 EB
I-70 WB
I-65 SB / I-70 WB CD ROAD
MSE WALL
ROOSEVELT AVE
CSX RAILROAD
10TH STREET
C
E
G
D
FG
F
BC
B
J
JK
K
REMOVE MEDIAN BARRIER.
MAINTAIN 3-LANES ON CD
RAMP BRIDGE
MOT LEGEND
TEMPORARY PAVEMENT
PROPOSED ROADWAY/BRIDGE - PRIOR PHASE(S)
PROPOSED ROADWAY/BRIDGE - CURRENT PHASE
(#) TRAFFIC FLOW (# OF LANES)
ROAD CLOSED
ALTERNATE CLOSURES OF LOCAL STREETS
STRUCTURE NUMBER
SCALE 0' 50' 100' 200'
2016 AERIAL PHOTO
CONCEPTUAL MOT PLAN
PHASE 1
SHEET 2a

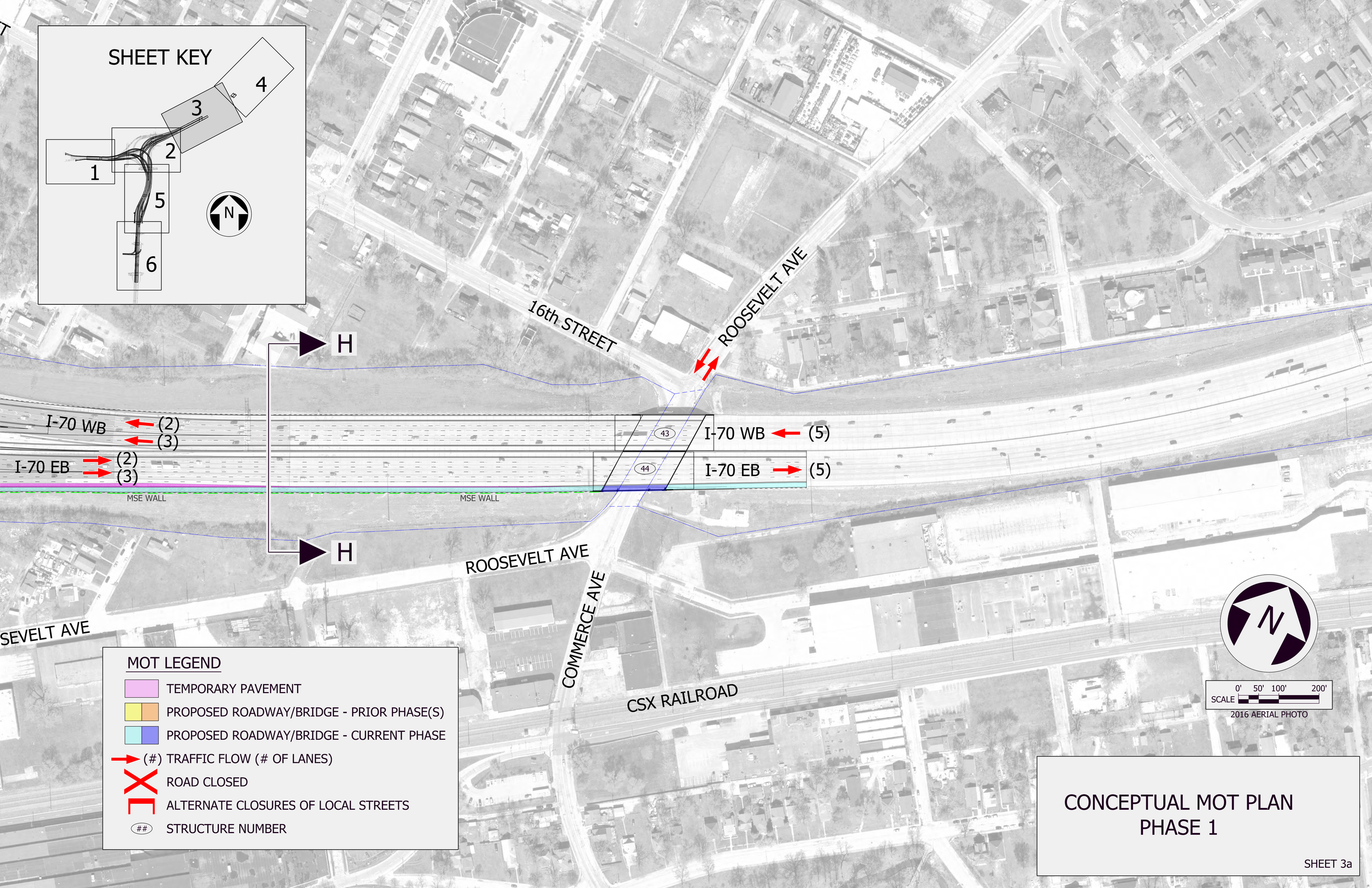
SHEET KEY
1
2
3
4
5
6
N
16th STREET
ROOSEVELT AVE
H
H
I-70 WB
(2)
(3)
I-70 EB
(2)
(3)
43
44
I-70 WB
(5)
I-70 EB
(5)
MSE WALL
MSE WALL
ROOSEVELT AVE
COMMERCE AVE
SEVELT AVE
CSX RAILROAD
N
SCALE
0'
50'
100'
200'
2016 AERIAL PHOTO
MOT LEGEND
TEMPORARY PAVEMENT
PROPOSED ROADWAY/BRIDGE - PRIOR PHASE(S)
PROPOSED ROADWAY/BRIDGE - CURRENT PHASE
(#) TRAFFIC FLOW (# OF LANES)
ROAD CLOSED
ALTERNATE CLOSURES OF LOCAL STREETS
STRUCTURE NUMBER
CONCEPTUAL MOT PLAN
PHASE 1
SHEET 3a

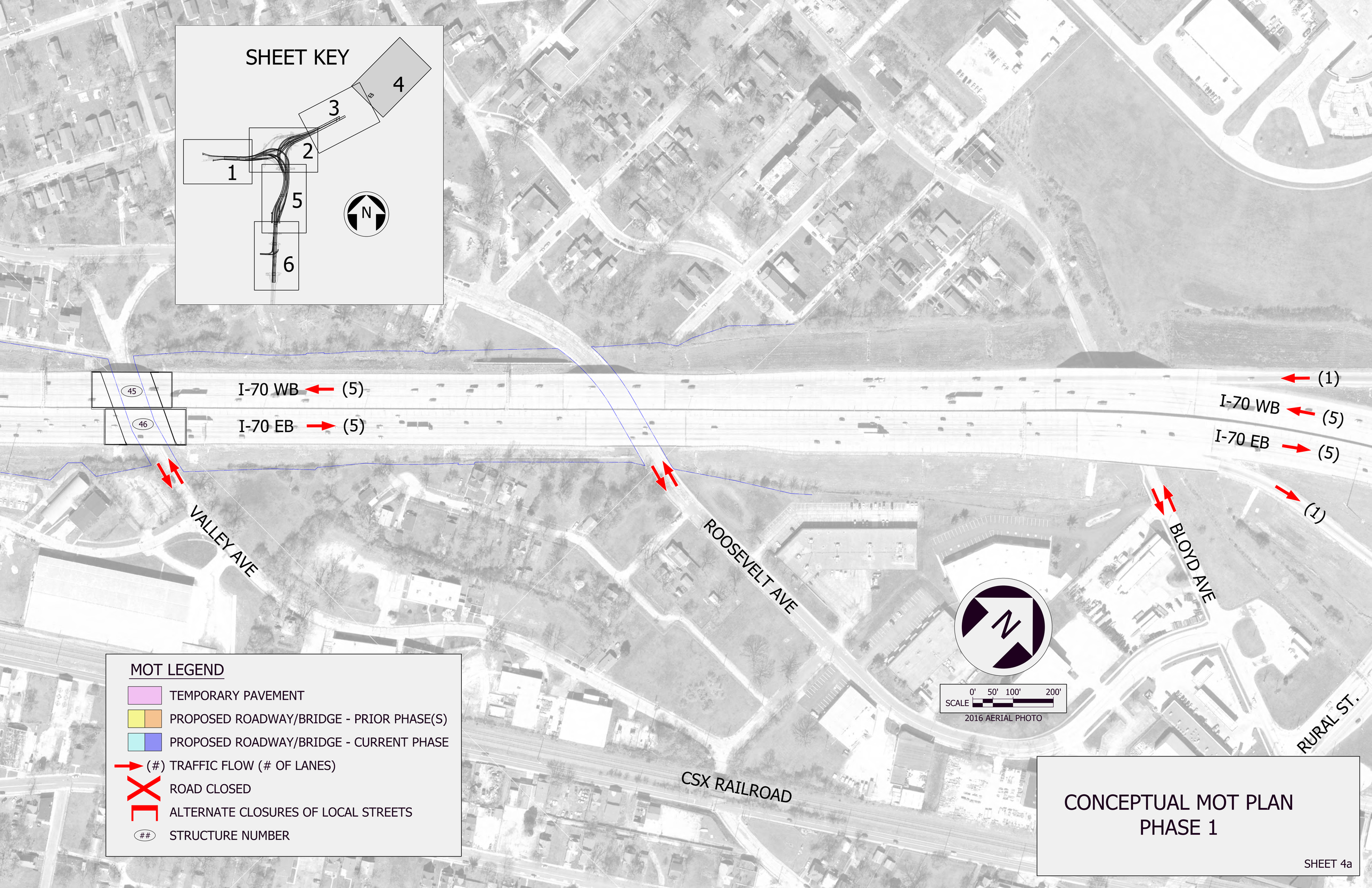

CONCEPTUAL MOT PLAN
PHASE 1

SHEET 4a

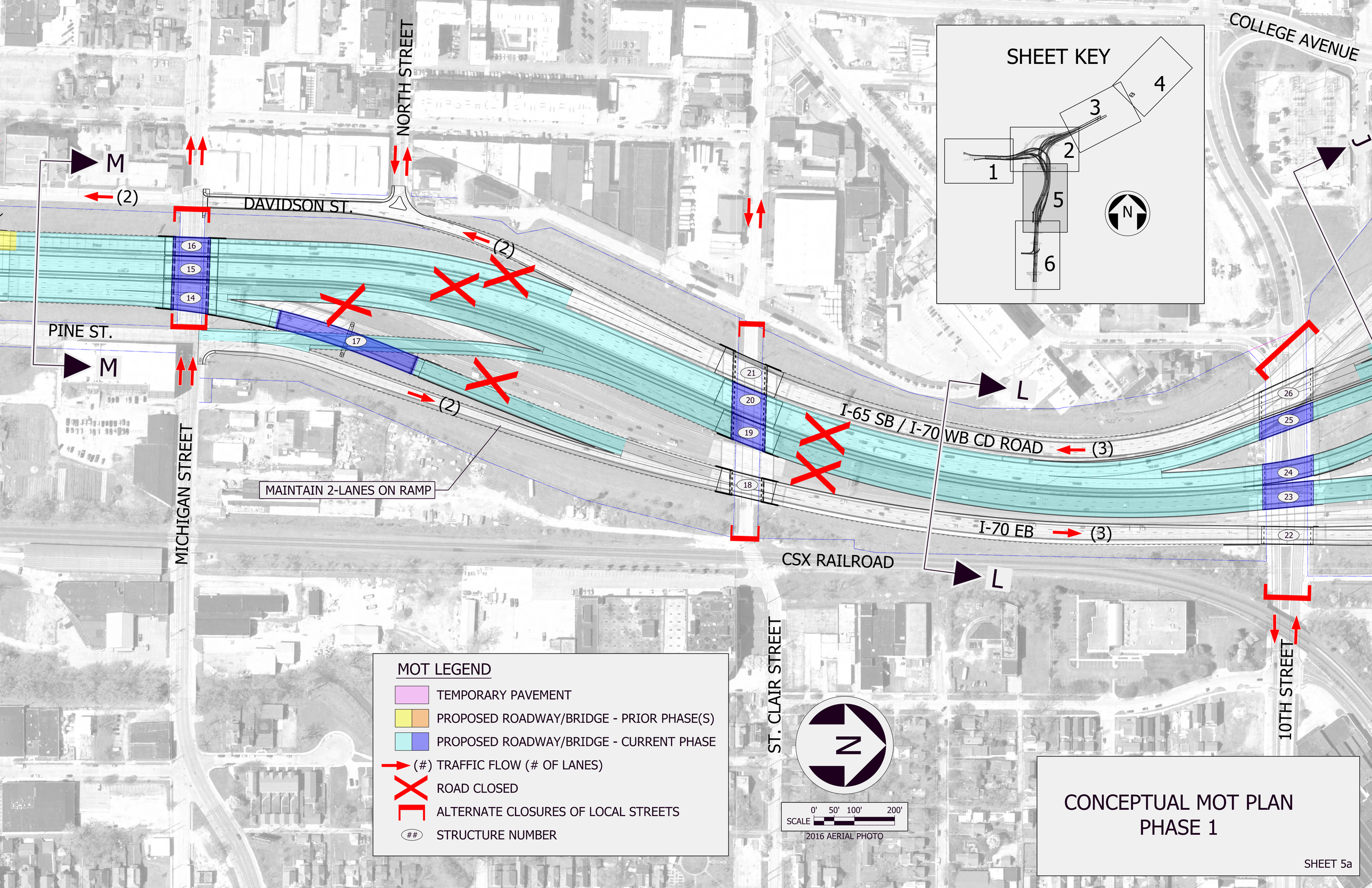
SHEET KEY
1
2
3
4
5
6
N
COLLEGE AVENUE
NORTH STREET
DAVIDSON ST.
PINE ST.
MICHIGAN STREET
ST. CLAIR STREET
10TH STREET
CSX RAILROAD
I-65 SB / I-70 WB CD ROAD
I-70 EB
MAINTAIN 2-LANES ON RAMP
M
L
J
(2)
(3)
14
15
16
17
18
19
20
21
22
23
24
25
26
MOT LEGEND
TEMPORARY PAVEMENT
PROPOSED ROADWAY/BRIDGE - PRIOR PHASE(S)
PROPOSED ROADWAY/BRIDGE - CURRENT PHASE
(#) TRAFFIC FLOW (# OF LANES)
ROAD CLOSED
ALTERNATE CLOSURES OF LOCAL STREETS
STRUCTURE NUMBER
N
SCALE 0' 50' 100' 200'
2016 AERIAL PHOTO
CONCEPTUAL MOT PLAN
PHASE 1
SHEET 5a

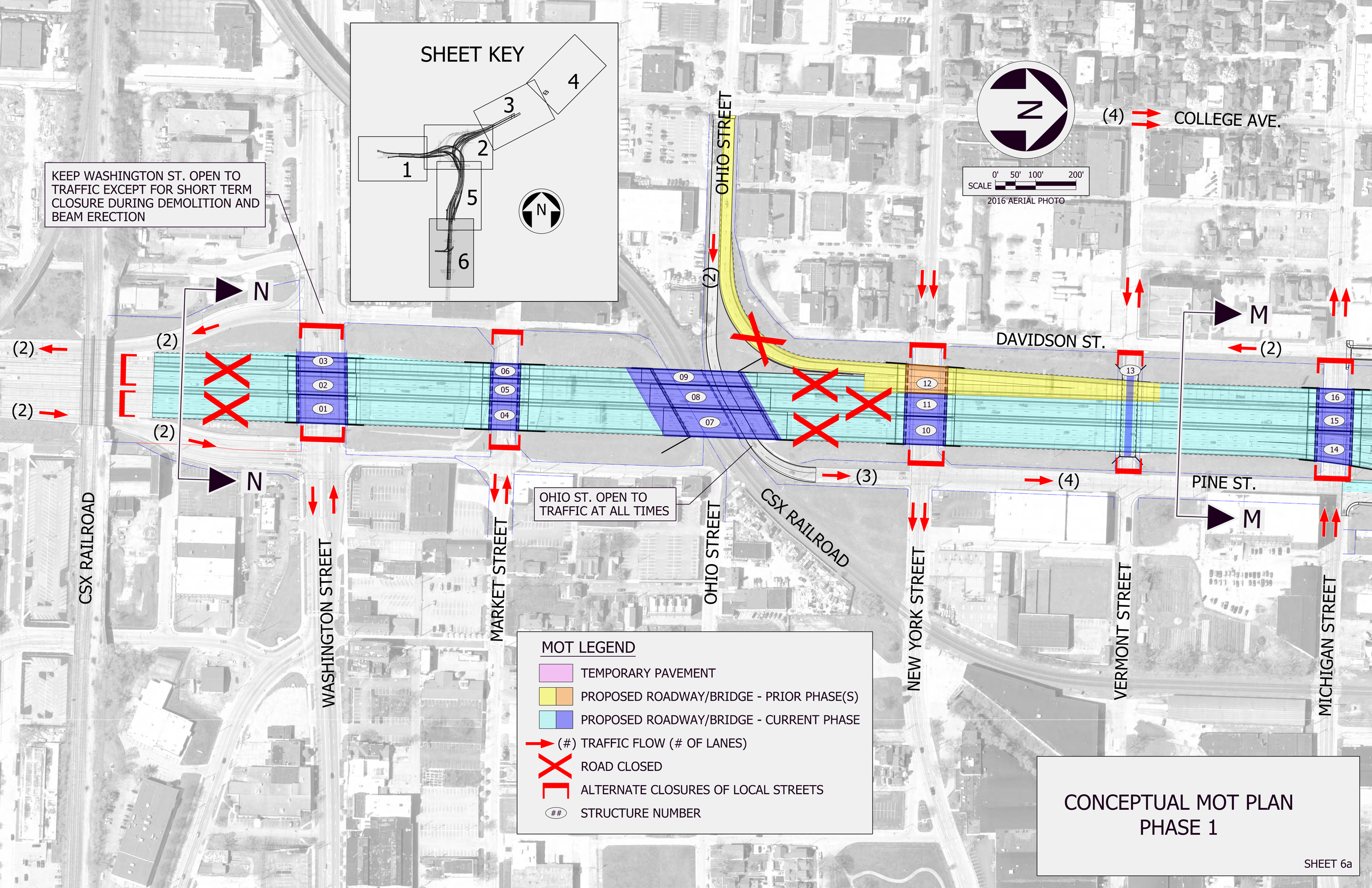
SHEET KEY
1
2
3
4
5
6
N
KEEP WASHINGTON ST. OPEN TO TRAFFIC EXCEPT FOR SHORT TERM CLOSURE DURING DEMOLITION AND BEAM ERECTION
OHIO STREET
(2)
(4)
COLLEGE AVE.
N
0' 50' 100' 200'
SCALE
2016 AERIAL PHOTO
M
DAVIDSON ST.
(2)
(2)
(2)
(2)
03
02
01
06
05
04
09
08
07
12
11
10
13
16
15
14
N
(3)
(4)
PINE ST.
M
OHIO ST. OPEN TO TRAFFIC AT ALL TIMES
CSX RAILROAD
CSX RAILROAD
WASHINGTON STREET
MARKET STREET
OHIO STREET
NEW YORK STREET
VERMONT STREET
MICHIGAN STREET
MOT LEGEND
TEMPORARY PAVEMENT
PROPOSED ROADWAY/BRIDGE - PRIOR PHASE(S)
PROPOSED ROADWAY/BRIDGE - CURRENT PHASE
(#) TRAFFIC FLOW (# OF LANES)
ROAD CLOSED
ALTERNATE CLOSURES OF LOCAL STREETS
STRUCTURE NUMBER
CONCEPTUAL MOT PLAN
PHASE 1
SHEET 6a

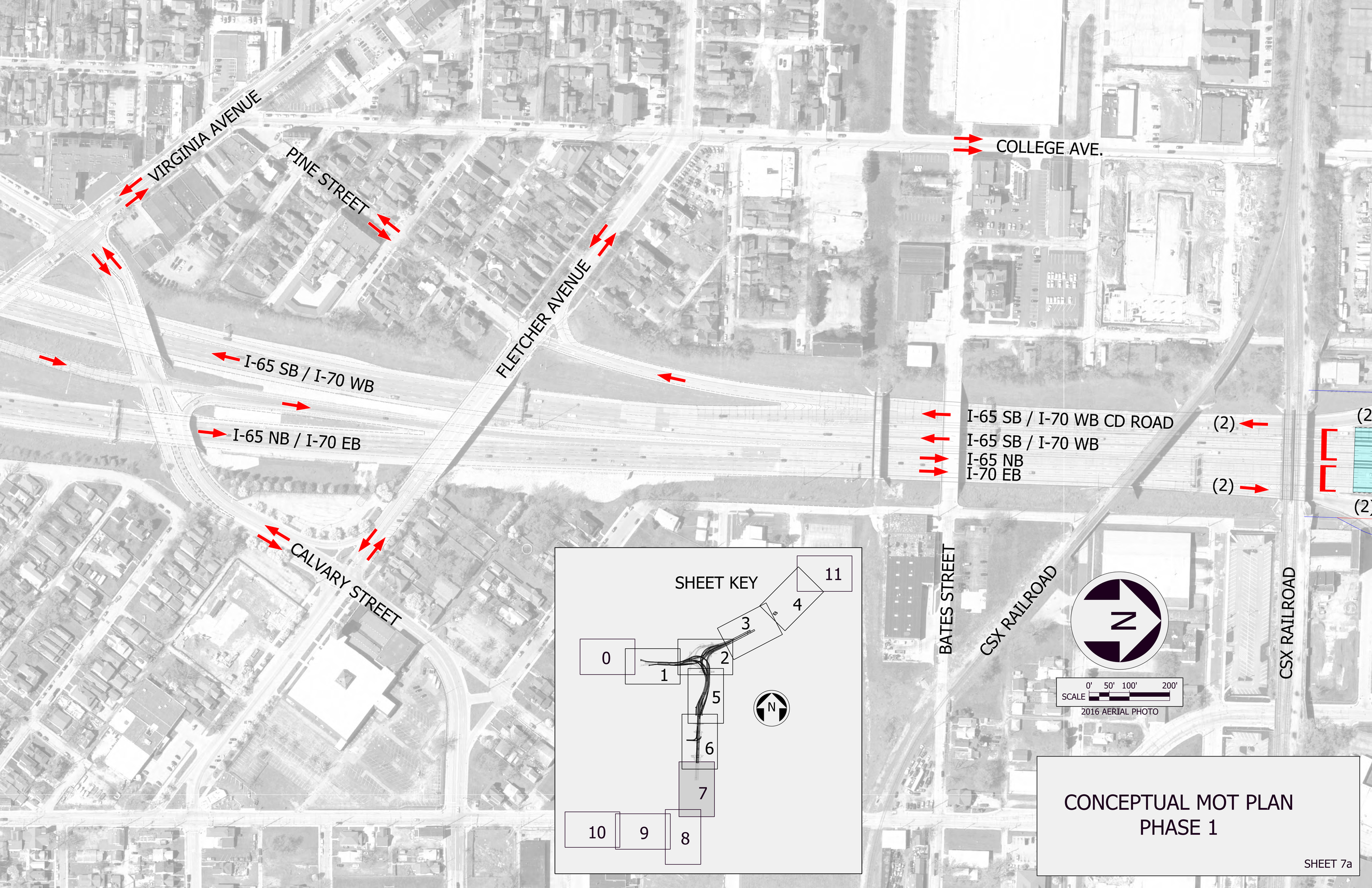
VIRGINIA AVENUE
PINE STREET
COLLEGE AVE.
FLETCHER AVENUE
I-65 SB / I-70 WB
I-65 NB / I-70 EB
I-65 SB / I-70 WB CD ROAD
I-65 SB / I-70 WB
I-65 NB
I-70 EB
(2)
(2)
(2)
(2)
CALVARY STREET
BATES STREET
CSX RAILROAD
CSX RAILROAD
SHEET KEY
0
1
2
3
4
5
6
7
8
9
10
11
N
N
SCALE
0' 50' 100' 200'
2016 AERIAL PHOTO
CONCEPTUAL MOT PLAN
PHASE 1
SHEET 7a

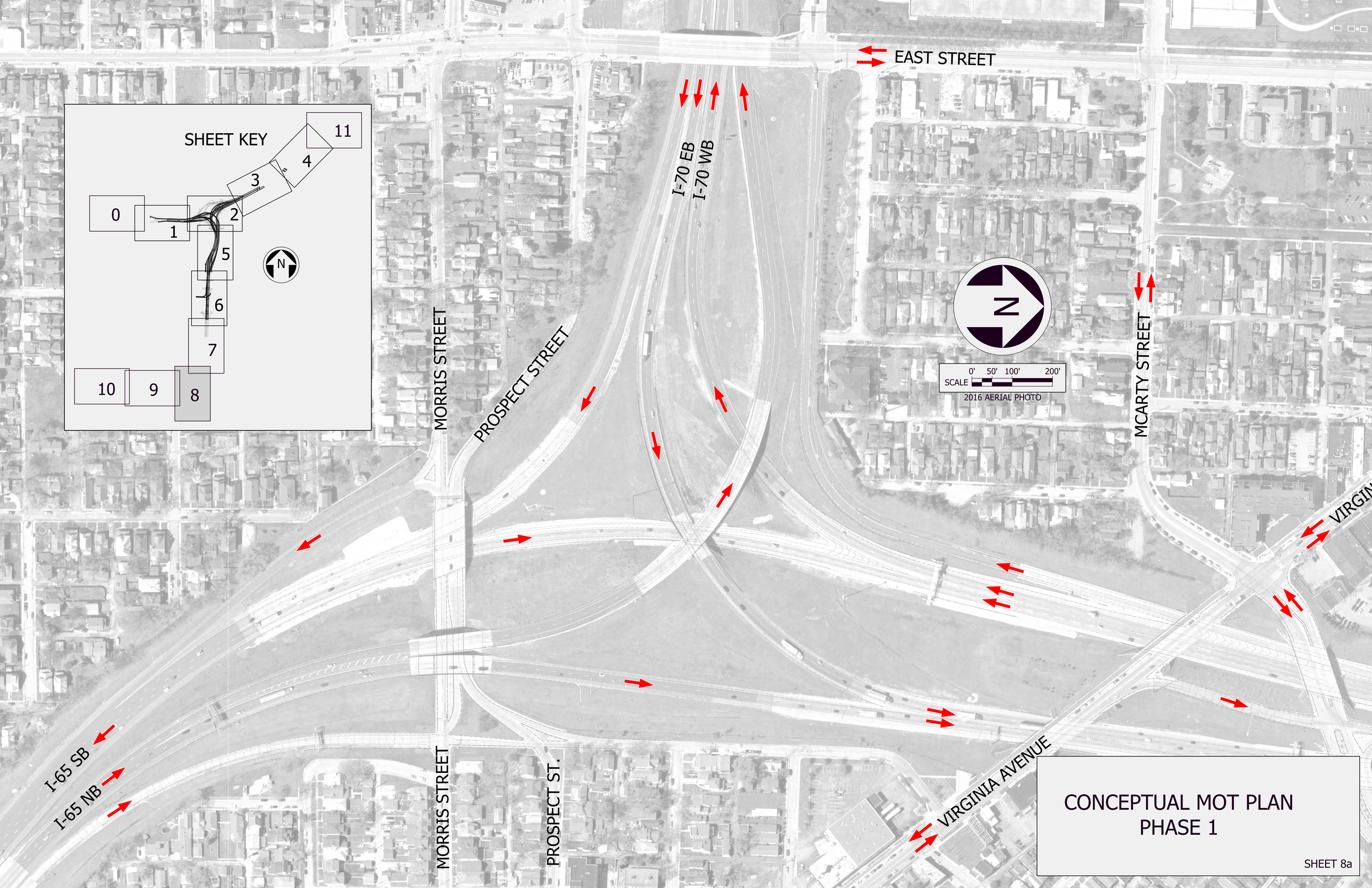

CONCEPTUAL MOT PLAN
PHASE 1

SHEET 8a

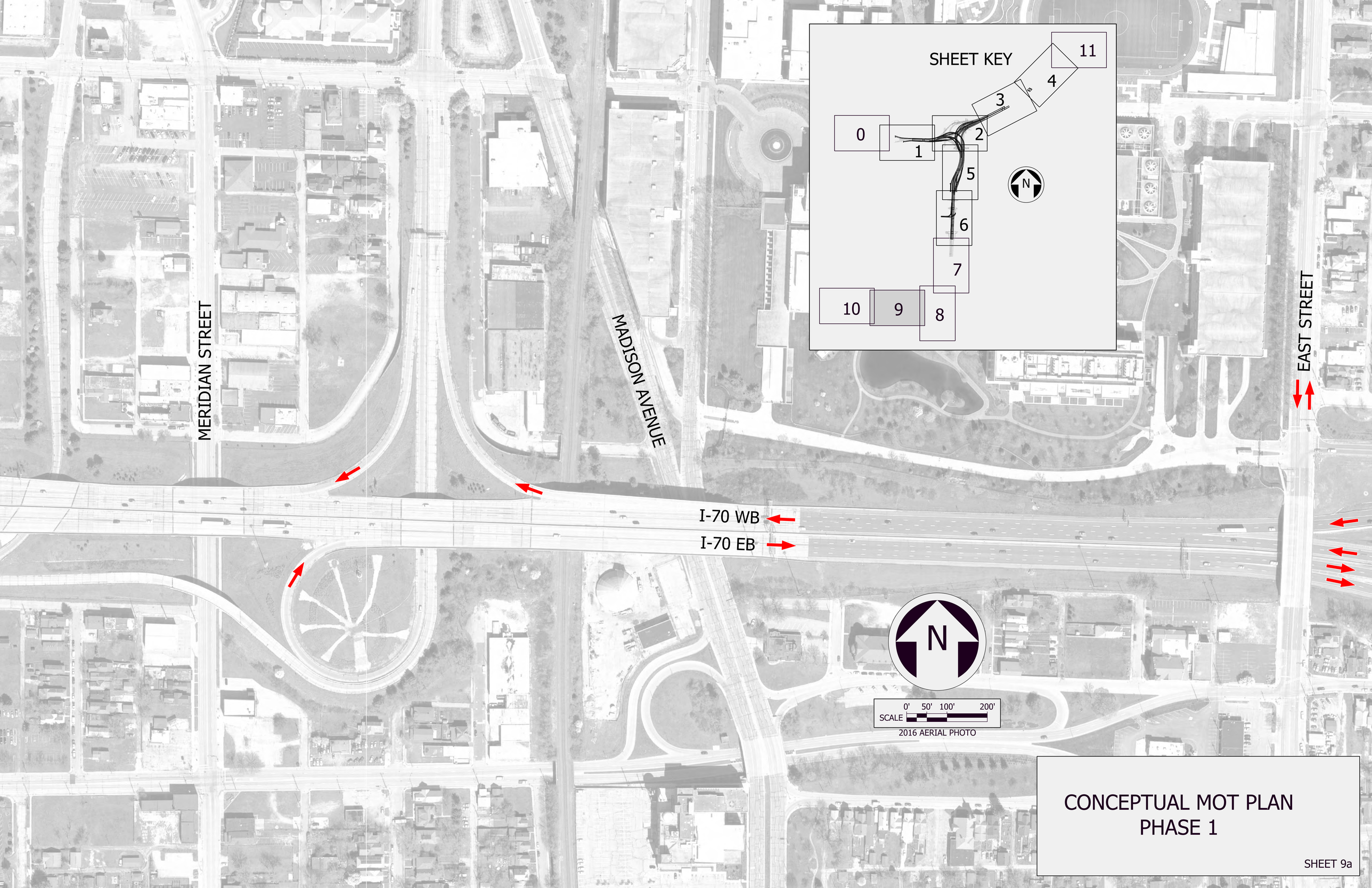

CONCEPTUAL MOT PLAN
PHASE 1

SHEET 9a

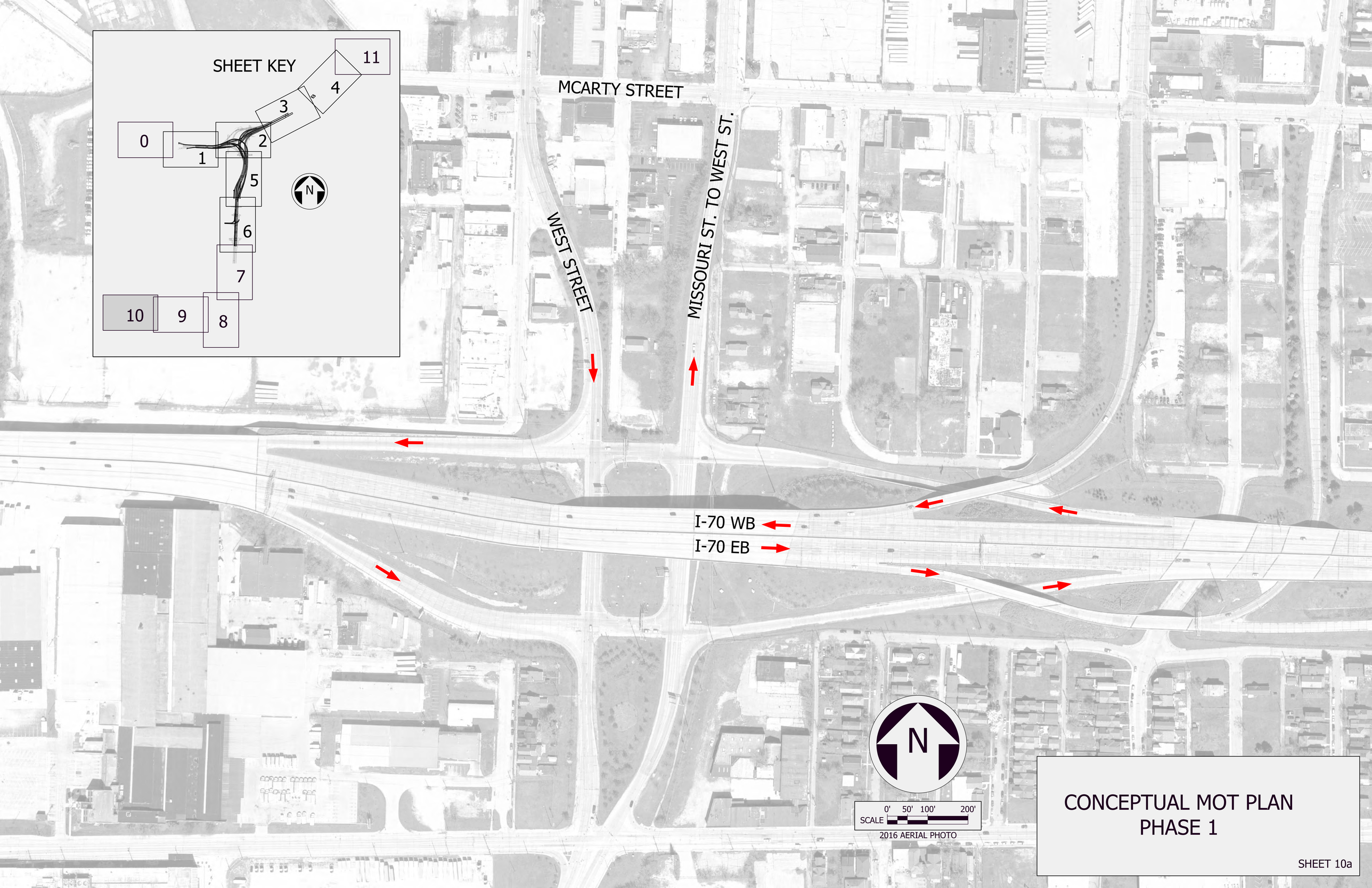

CONCEPTUAL MOT PLAN
PHASE 1

SHEET 10a

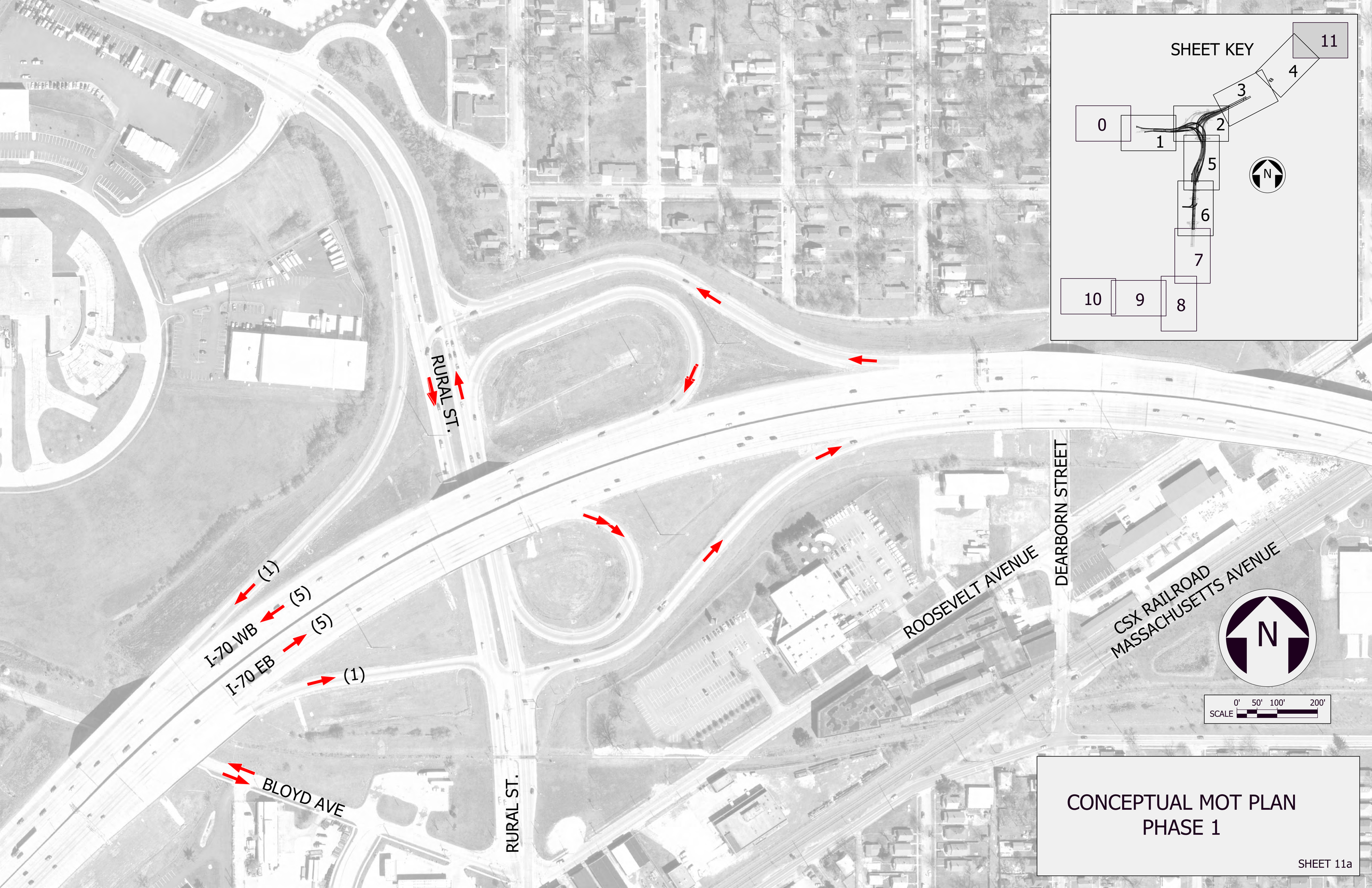

CONCEPTUAL MOT PLAN
PHASE 1

SHEET 11a

Attachment C1A

Alt 3 Conceptual MOT Plan Phase 1A

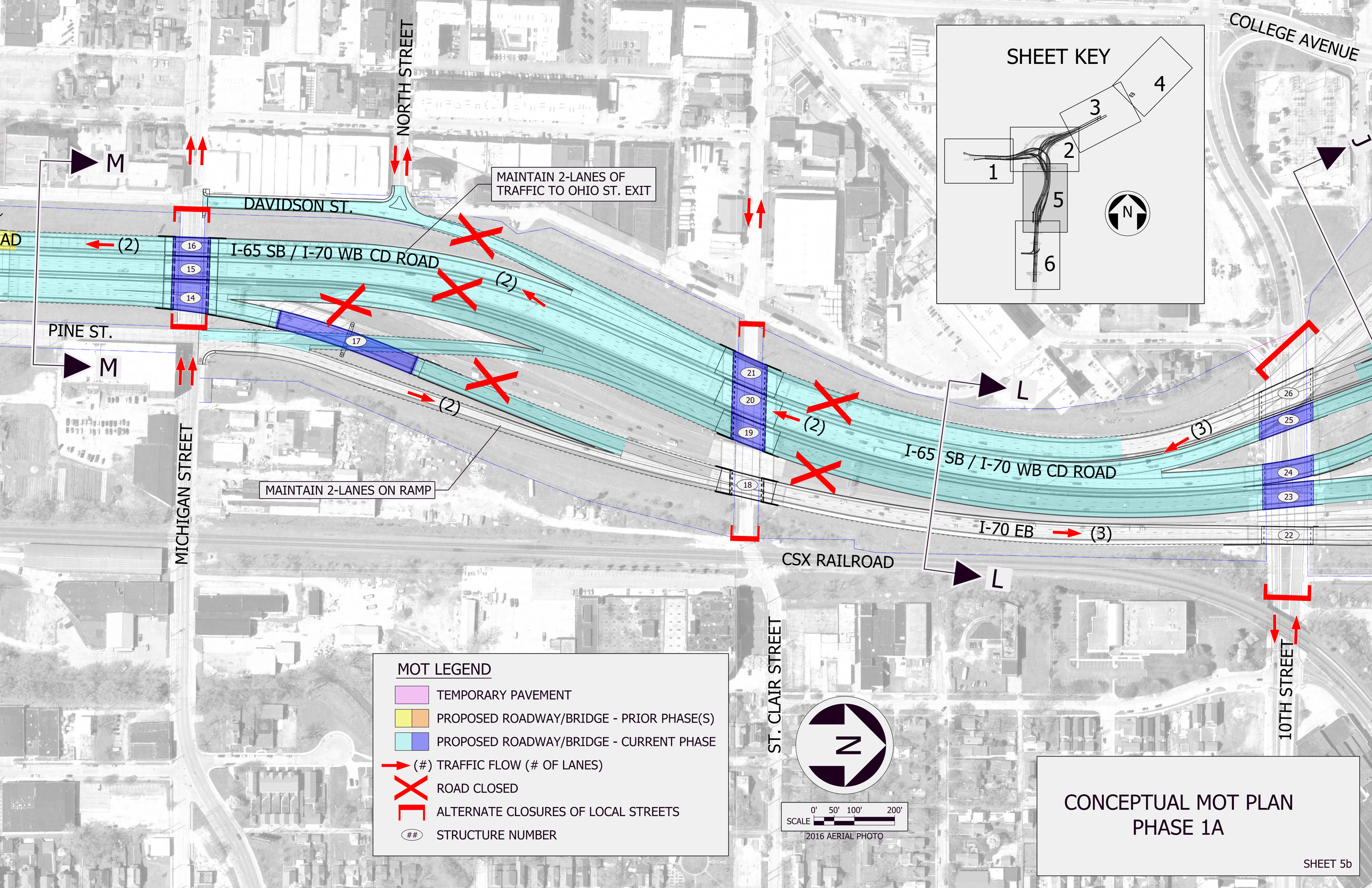
SHEET KEY
1
2
3
4
5
6
N
NORTH STREET
DAVIDSON ST.
MAINTAIN 2-LANES OF TRAFFIC TO OHIO ST. EXIT
I-65 SB / I-70 WB CD ROAD
(2)
16
15
14
17
PINE ST.
M
M
(2)
MAINTAIN 2-LANES ON RAMP
MICHIGAN STREET
21
20
19
18
(2)
I-65 SB / I-70 WB CD ROAD
(3)
26
25
24
23
22
I-70 EB
(3)
L
L
CSX RAILROAD
COLLEGE AVENUE
J
ST. CLAIR STREET
10TH STREET
MOT LEGEND
TEMPORARY PAVEMENT
PROPOSED ROADWAY/BRIDGE - PRIOR PHASE(S)
PROPOSED ROADWAY/BRIDGE - CURRENT PHASE
(#) TRAFFIC FLOW (# OF LANES)
ROAD CLOSED
ALTERNATE CLOSURES OF LOCAL STREETS
STRUCTURE NUMBER
N
0' 50' 100' 200'
SCALE
2016 AERIAL PHOTO
CONCEPTUAL MOT PLAN
PHASE 1A
SHEET 5b

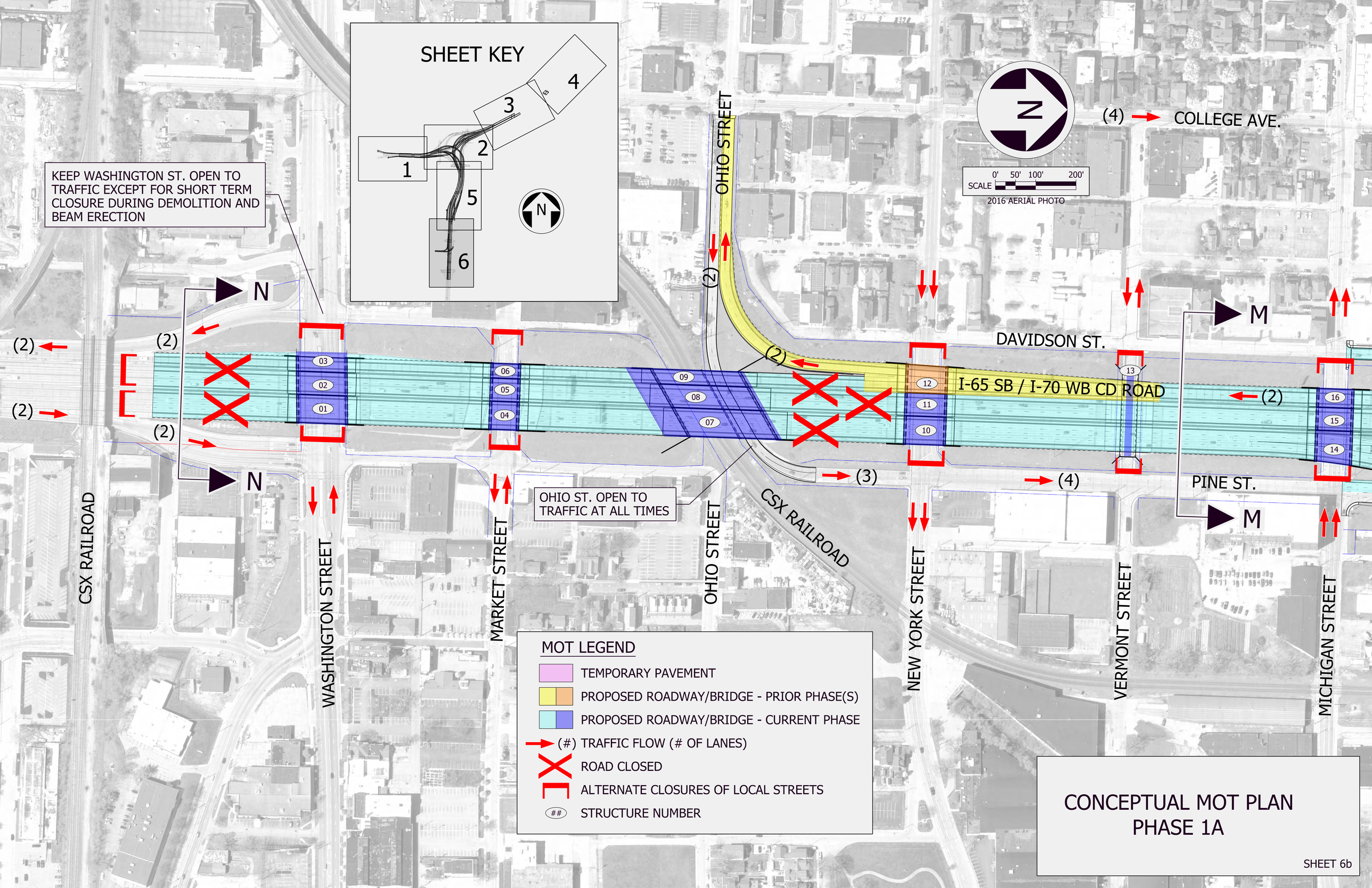
SHEET KEY
1
2
3
4
5
6
N
KEEP WASHINGTON ST. OPEN TO TRAFFIC EXCEPT FOR SHORT TERM CLOSURE DURING DEMOLITION AND BEAM ERECTION
OHIO STREET
(2)
(4)
COLLEGE AVE.
0' 50' 100' 200'
SCALE
2016 AERIAL PHOTO
N
M
DAVIDSON ST.
I-65 SB / I-70 WB CD ROAD
03
02
01
06
05
04
09
08
07
12
11
10
13
16
15
14
(3)
PINE ST.
OHIO ST. OPEN TO TRAFFIC AT ALL TIMES
CSX RAILROAD
CSX RAILROAD
WASHINGTON STREET
MARKET STREET
OHIO STREET
NEW YORK STREET
VERMONT STREET
MICHIGAN STREET
MOT LEGEND
TEMPORARY PAVEMENT
PROPOSED ROADWAY/BRIDGE - PRIOR PHASE(S)
PROPOSED ROADWAY/BRIDGE - CURRENT PHASE
(#) TRAFFIC FLOW (# OF LANES)
ROAD CLOSED
ALTERNATE CLOSURES OF LOCAL STREETS
STRUCTURE NUMBER
CONCEPTUAL MOT PLAN
PHASE 1A
SHEET 6b

Attachment C2

Alt 3 Conceptual MOT Plan Phase 2

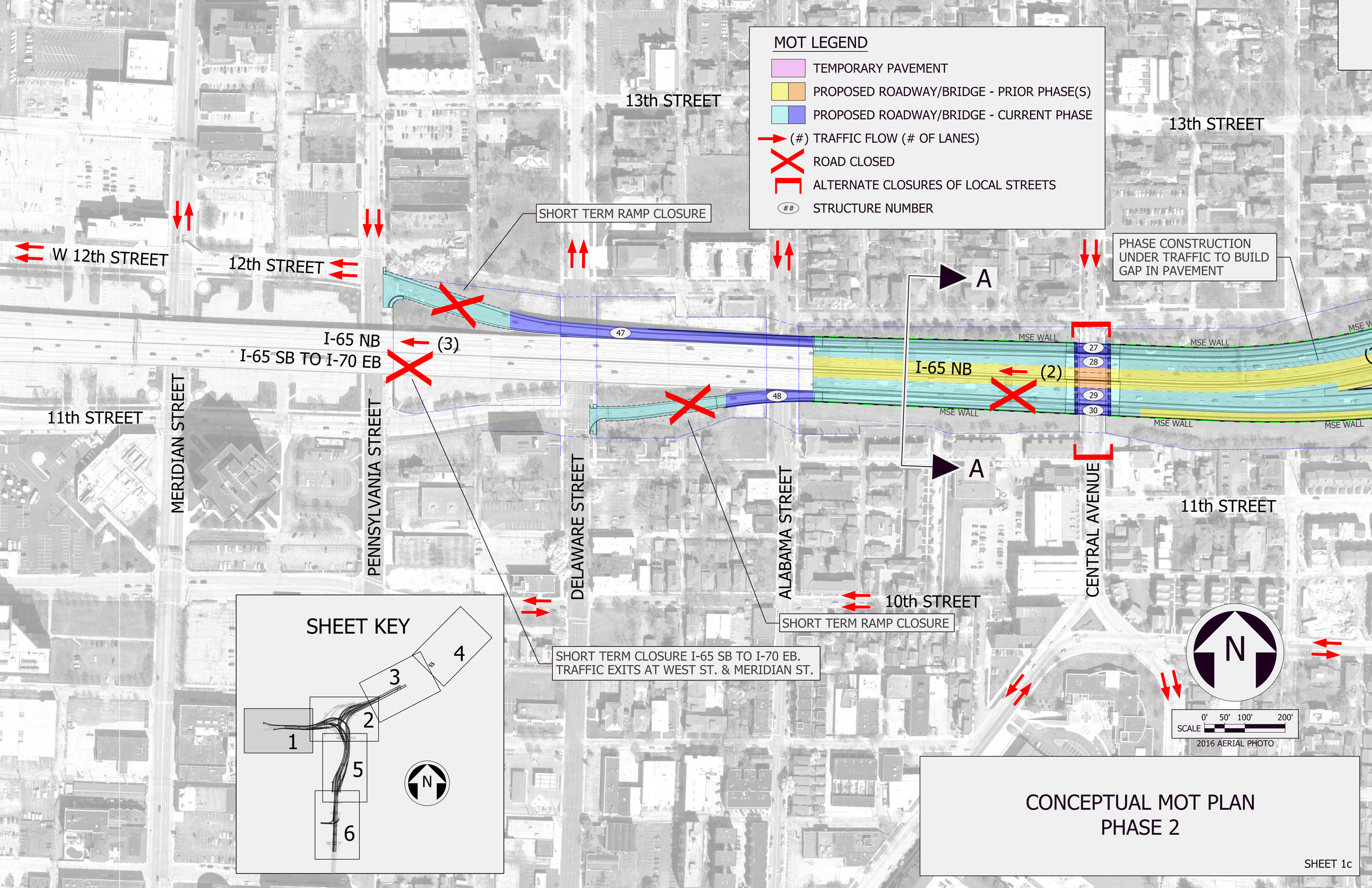
MOT LEGEND
TEMPORARY PAVEMENT
PROPOSED ROADWAY/BRIDGE - PRIOR PHASE(S)
PROPOSED ROADWAY/BRIDGE - CURRENT PHASE
(#) TRAFFIC FLOW (# OF LANES)
ROAD CLOSED
ALTERNATE CLOSURES OF LOCAL STREETS
STRUCTURE NUMBER
13th STREET
13th STREET
W 12th STREET
12th STREET
SHORT TERM RAMP CLOSURE
PHASE CONSTRUCTION UNDER TRAFFIC TO BUILD GAP IN PAVEMENT
A
A
I-65 NB
(3)
I-65 SB TO I-70 EB
I-65 NB
(2)
47
48
27
28
29
30
MSE WALL
MSE WALL
MSE WALL
MSE WALL
MSE WALL
11th STREET
11th STREET
MERIDIAN STREET
PENNSYLVANIA STREET
DELAWARE STREET
ALABAMA STREET
CENTRAL AVENUE
10th STREET
SHORT TERM RAMP CLOSURE
SHORT TERM CLOSURE I-65 SB TO I-70 EB.
TRAFFIC EXITS AT WEST ST. & MERIDIAN ST.
SHEET KEY
1
2
3
4
5
6
N
N
0' 50' 100' 200'
SCALE
2016 AERIAL PHOTO
CONCEPTUAL MOT PLAN
PHASE 2
SHEET 1c

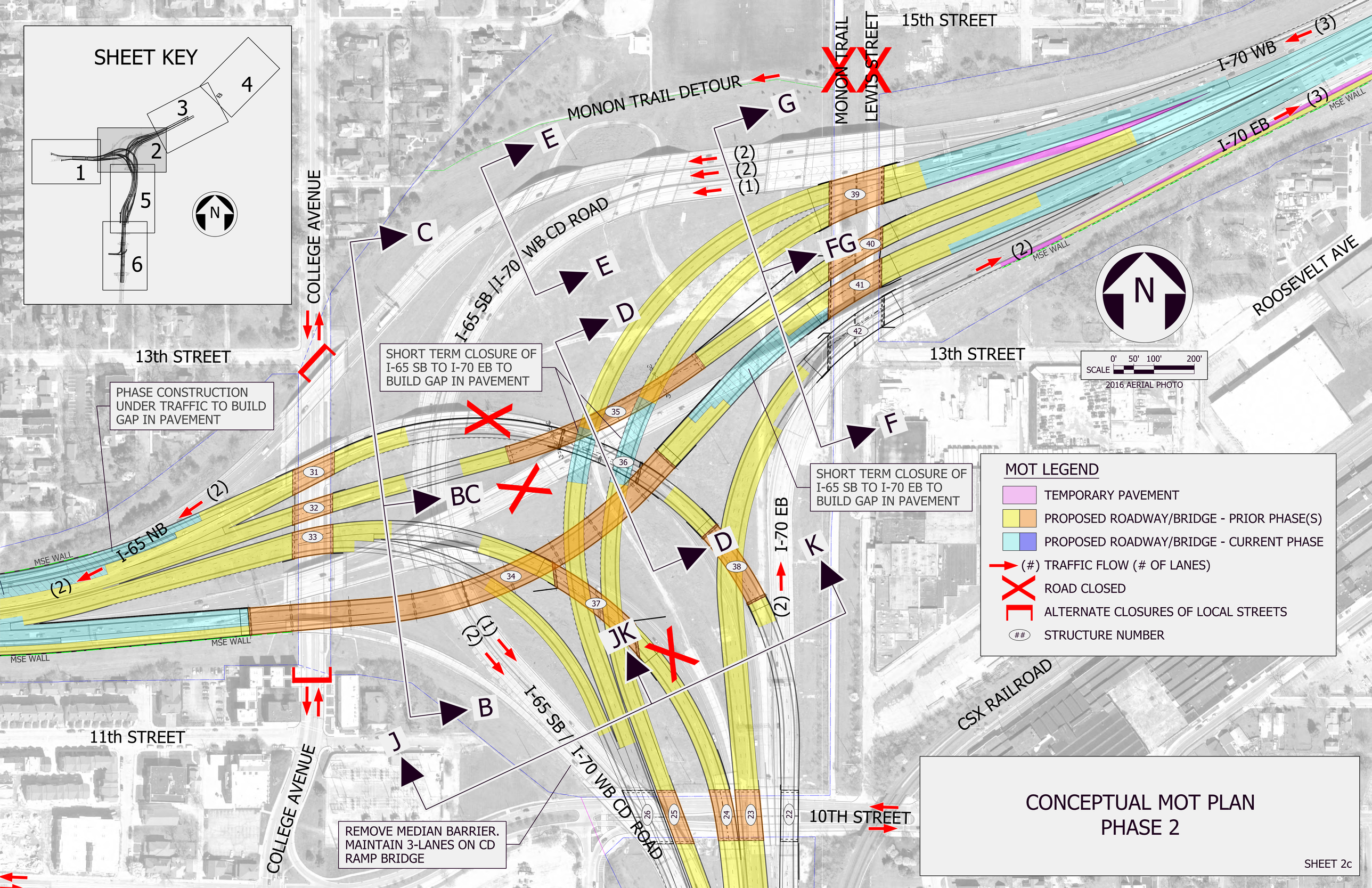
SHEET KEY
1
2
3
4
5
6
N
MONON TRAIL DETOUR
MONON TRAIL
LEWIS STREET
15th STREET
I-70 WB
I-70 EB
MSE WALL
COLLEGE AVENUE
I-65 SB / I-70 WB CD ROAD
13th STREET
SHORT TERM CLOSURE OF I-65 SB TO I-70 EB TO BUILD GAP IN PAVEMENT
PHASE CONSTRUCTION UNDER TRAFFIC TO BUILD GAP IN PAVEMENT
I-65 NB
ROOSEVELT AVE
SCALE 0' 50' 100' 200'
2016 AERIAL PHOTO
SHORT TERM CLOSURE OF I-65 SB TO I-70 EB TO BUILD GAP IN PAVEMENT
I-70 EB
11th STREET
I-65 SB / I-70 WB CD ROAD
CSX RAILROAD
REMOVE MEDIAN BARRIER. MAINTAIN 3-LANES ON CD RAMP BRIDGE
10TH STREET
MOT LEGEND
TEMPORARY PAVEMENT
PROPOSED ROADWAY/BRIDGE - PRIOR PHASE(S)
PROPOSED ROADWAY/BRIDGE - CURRENT PHASE
(#) TRAFFIC FLOW (# OF LANES)
ROAD CLOSED
ALTERNATE CLOSURES OF LOCAL STREETS
STRUCTURE NUMBER
CONCEPTUAL MOT PLAN
PHASE 2
SHEET 2c

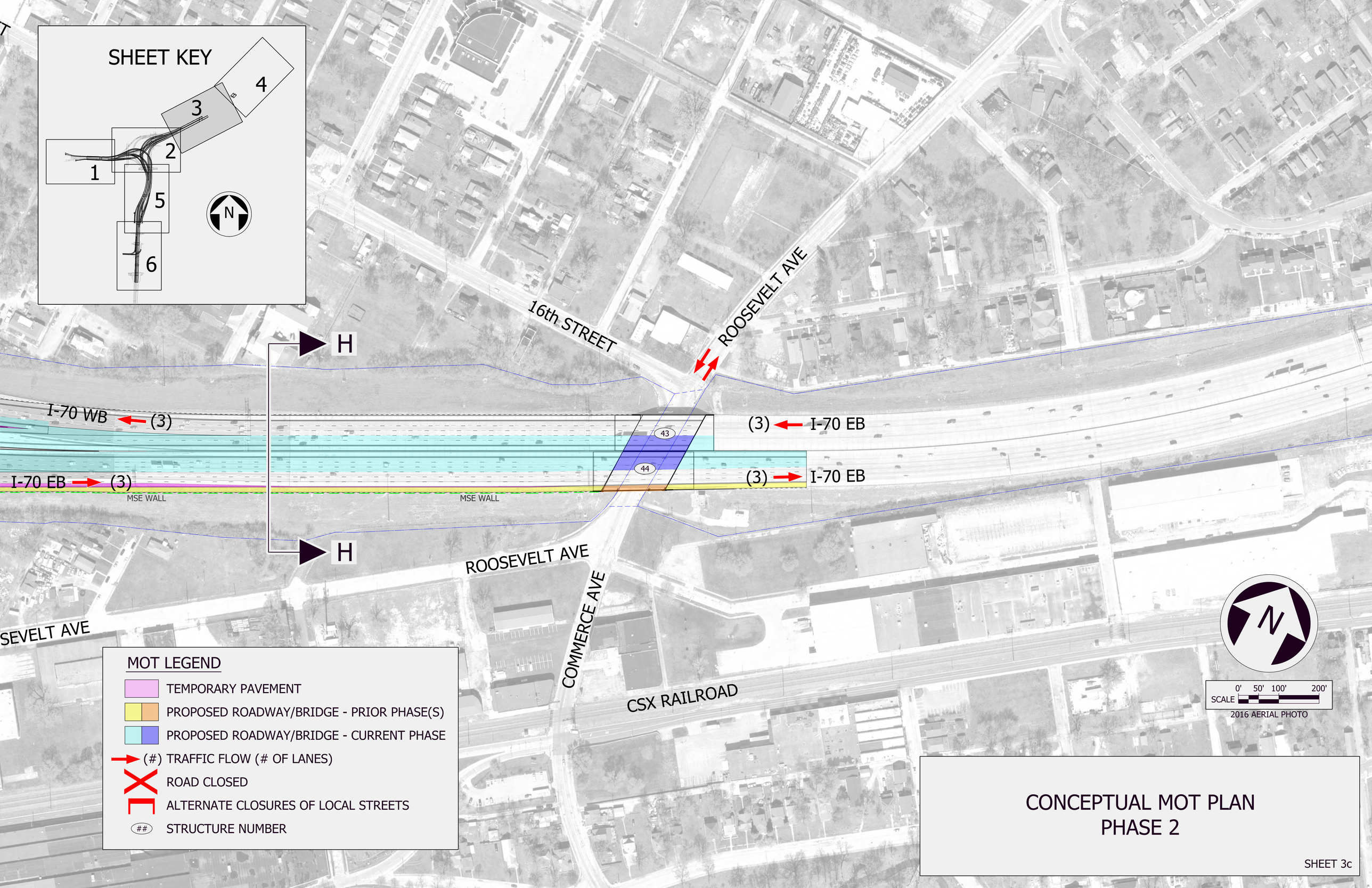
SHEET KEY
1
2
3
4
5
6
N
16th STREET
ROOSEVELT AVE
H
I-70 WB
(3)
I-70 EB
(3)
43
44
(3)
I-70 EB
(3)
I-70 EB
MSE WALL
MSE WALL
H
ROOSEVELT AVE
COMMERCE AVE
SEVELT AVE
CSX RAILROAD
N
0' 50' 100' 200'
SCALE
2016 AERIAL PHOTO
MOT LEGEND
TEMPORARY PAVEMENT
PROPOSED ROADWAY/BRIDGE - PRIOR PHASE(S)
PROPOSED ROADWAY/BRIDGE - CURRENT PHASE
(#) TRAFFIC FLOW (# OF LANES)
ROAD CLOSED
ALTERNATE CLOSURES OF LOCAL STREETS
STRUCTURE NUMBER
CONCEPTUAL MOT PLAN
PHASE 2
SHEET 3c

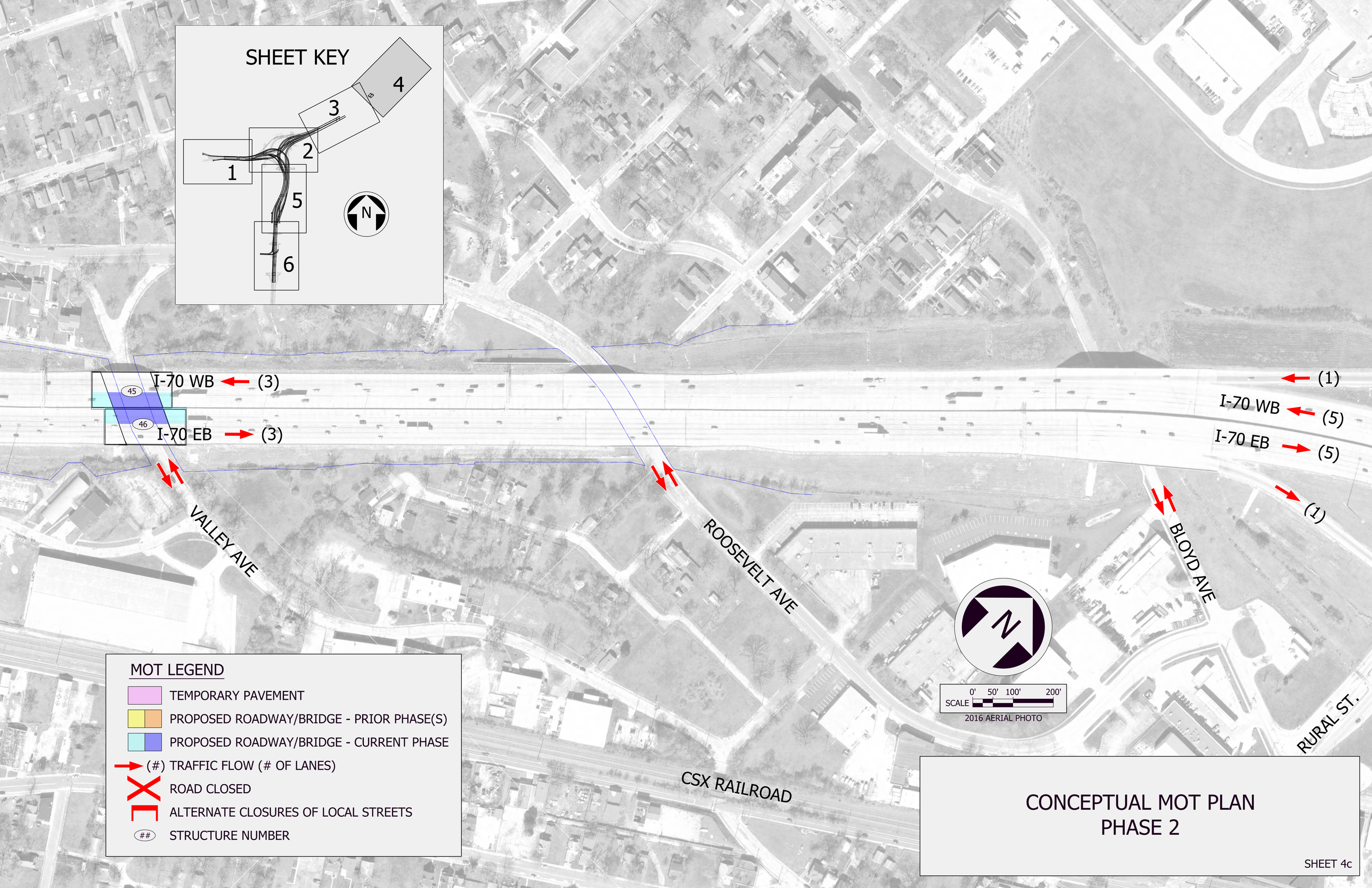
SHEET KEY
1
2
3
4
5
6
N
I-70 WB
(3)
45
46
I-70 EB
(3)
VALLEY AVE
ROOSEVELT AVE
(1)
I-70 WB
(5)
I-70 EB
(5)
(1)
BLOYD AVE
N
0' 50' 100' 200'
SCALE
2016 AERIAL PHOTO
RURAL ST.
CSX RAILROAD
MOT LEGEND
TEMPORARY PAVEMENT
PROPOSED ROADWAY/BRIDGE - PRIOR PHASE(S)
PROPOSED ROADWAY/BRIDGE - CURRENT PHASE
(#) TRAFFIC FLOW (# OF LANES)
ROAD CLOSED
ALTERNATE CLOSURES OF LOCAL STREETS
STRUCTURE NUMBER
CONCEPTUAL MOT PLAN
PHASE 2
SHEET 4c

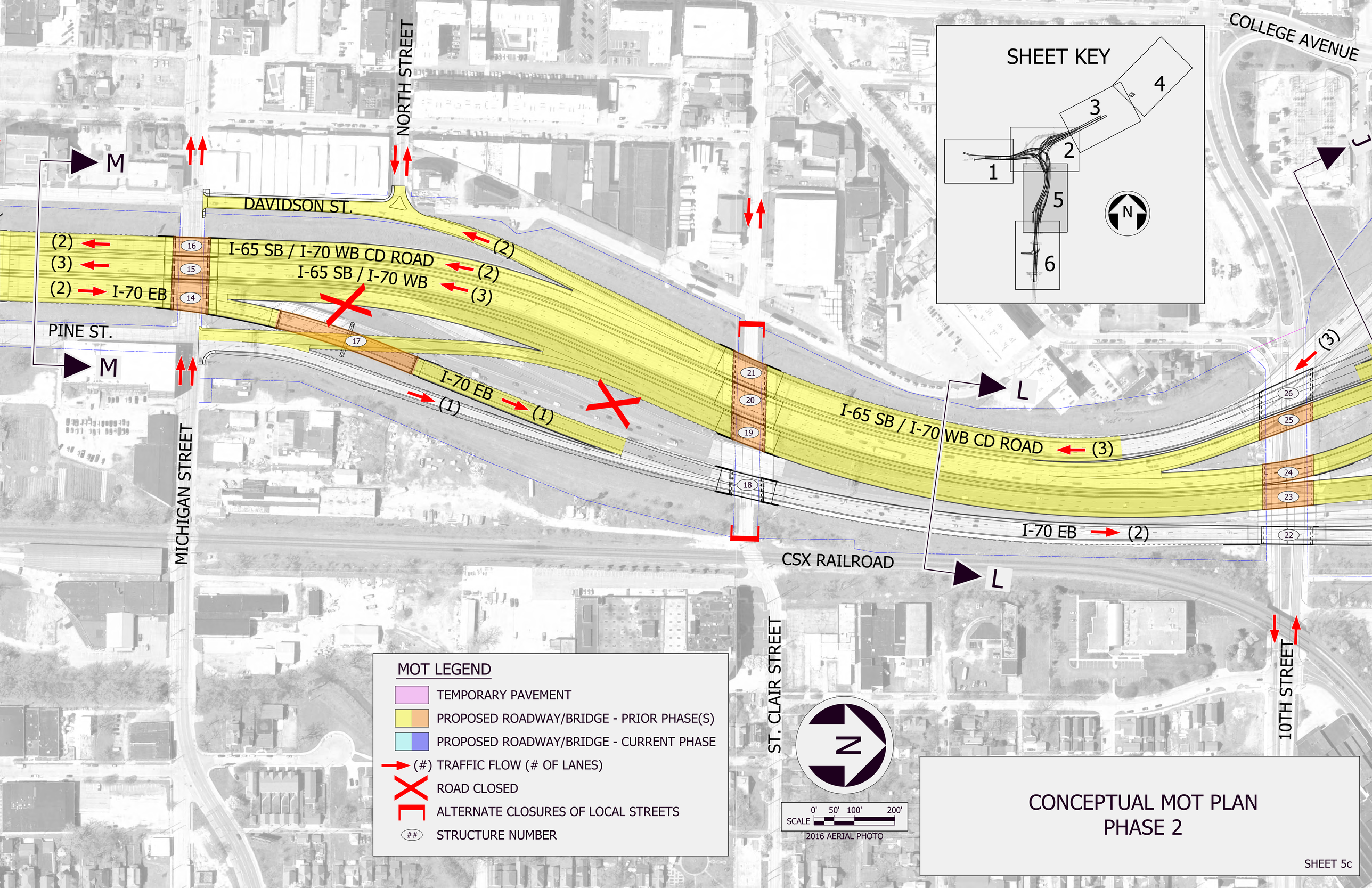
SHEET KEY
1
2
3
4
5
6
N
NORTH STREET
DAVIDSON ST.
PINE ST.
MICHIGAN STREET
COLLEGE AVENUE
ST. CLAIR STREET
10TH STREET
CSX RAILROAD
M
M
L
L
J
(2)
(3)
(2) I-70 EB
16
15
14
I-65 SB / I-70 WB CD ROAD
I-65 SB / I-70 WB
(2)
(3)
17
I-70 EB
(1)
(1)
21
20
19
18
I-65 SB / I-70 WB CD ROAD
(3)
26
25
24
23
22
I-70 EB
(2)
(3)
MOT LEGEND
TEMPORARY PAVEMENT
PROPOSED ROADWAY/BRIDGE - PRIOR PHASE(S)
PROPOSED ROADWAY/BRIDGE - CURRENT PHASE
(#) TRAFFIC FLOW (# OF LANES)
ROAD CLOSED
ALTERNATE CLOSURES OF LOCAL STREETS
STRUCTURE NUMBER
N
0' 50' 100' 200'
SCALE
2016 AERIAL PHOTO
CONCEPTUAL MOT PLAN
PHASE 2
SHEET 5c

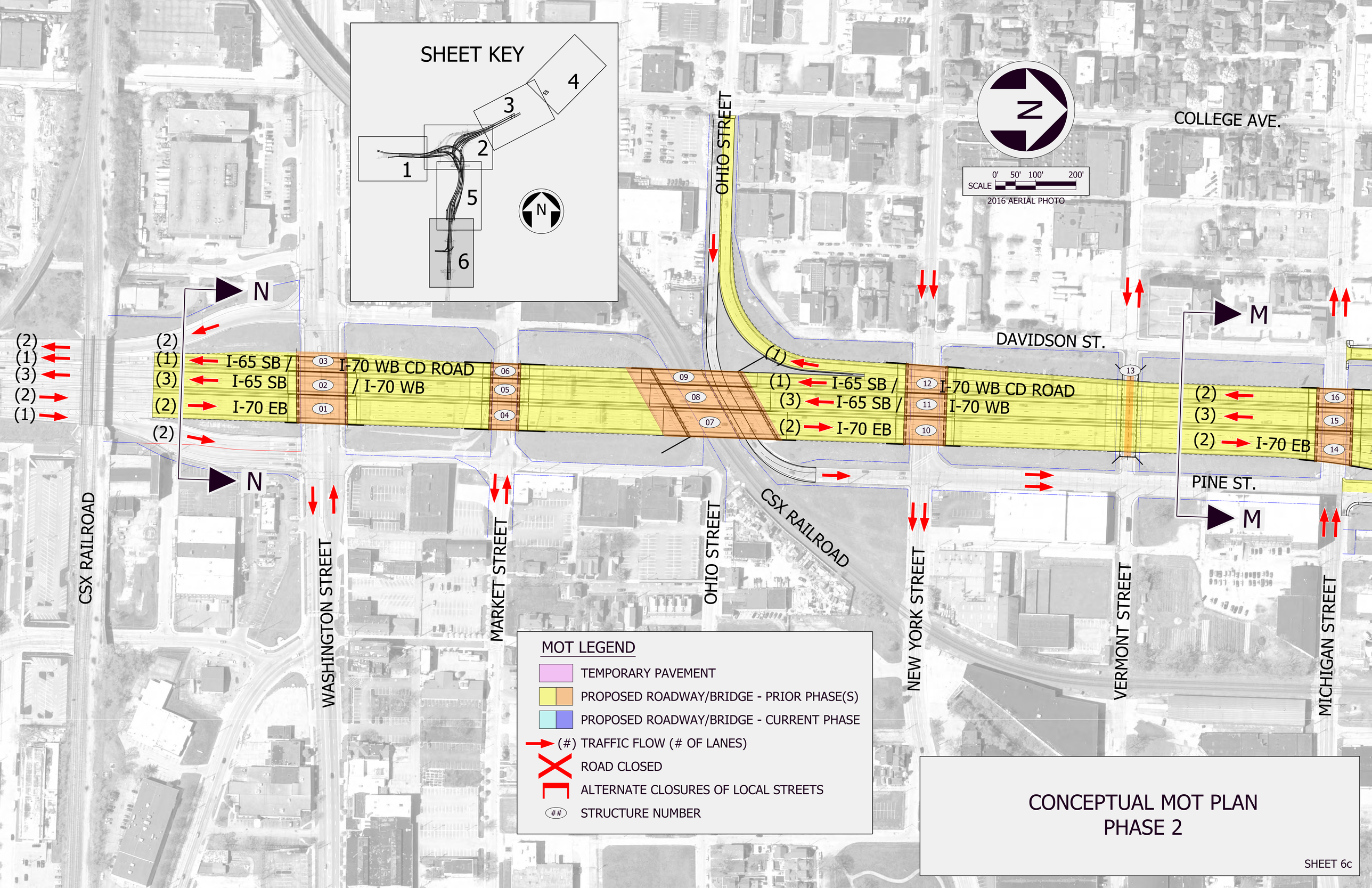
SHEET KEY
1
2
3
4
5
6
N
N
0' 50' 100' 200'
SCALE
2016 AERIAL PHOTO
COLLEGE AVE.
OHIO STREET
DAVIDSON ST.
PINE ST.
N
N
M
M
(2)
(1)
(3)
(2)
(1)
(2)
(2)
(1)
(3)
(2)
I-65 SB /
I-65 SB
I-70 EB
I-70 WB CD ROAD
/ I-70 WB
03
02
01
06
05
04
09
08
07
(1)
(1)
(3)
(2)
I-65 SB /
I-65 SB /
I-70 EB
I-70 WB CD ROAD
I-70 WB
12
11
10
13
(2)
(3)
(2)
I-70 EB
16
15
14
CSX RAILROAD
WASHINGTON STREET
MARKET STREET
OHIO STREET
CSX RAILROAD
NEW YORK STREET
VERMONT STREET
MICHIGAN STREET
MOT LEGEND
TEMPORARY PAVEMENT
PROPOSED ROADWAY/BRIDGE - PRIOR PHASE(S)
PROPOSED ROADWAY/BRIDGE - CURRENT PHASE
(#) TRAFFIC FLOW (# OF LANES)
ROAD CLOSED
ALTERNATE CLOSURES OF LOCAL STREETS
STRUCTURE NUMBER
CONCEPTUAL MOT PLAN
PHASE 2
SHEET 6c

Attachment C3

Alt 3 Conceptual MOT Plan Phase 3

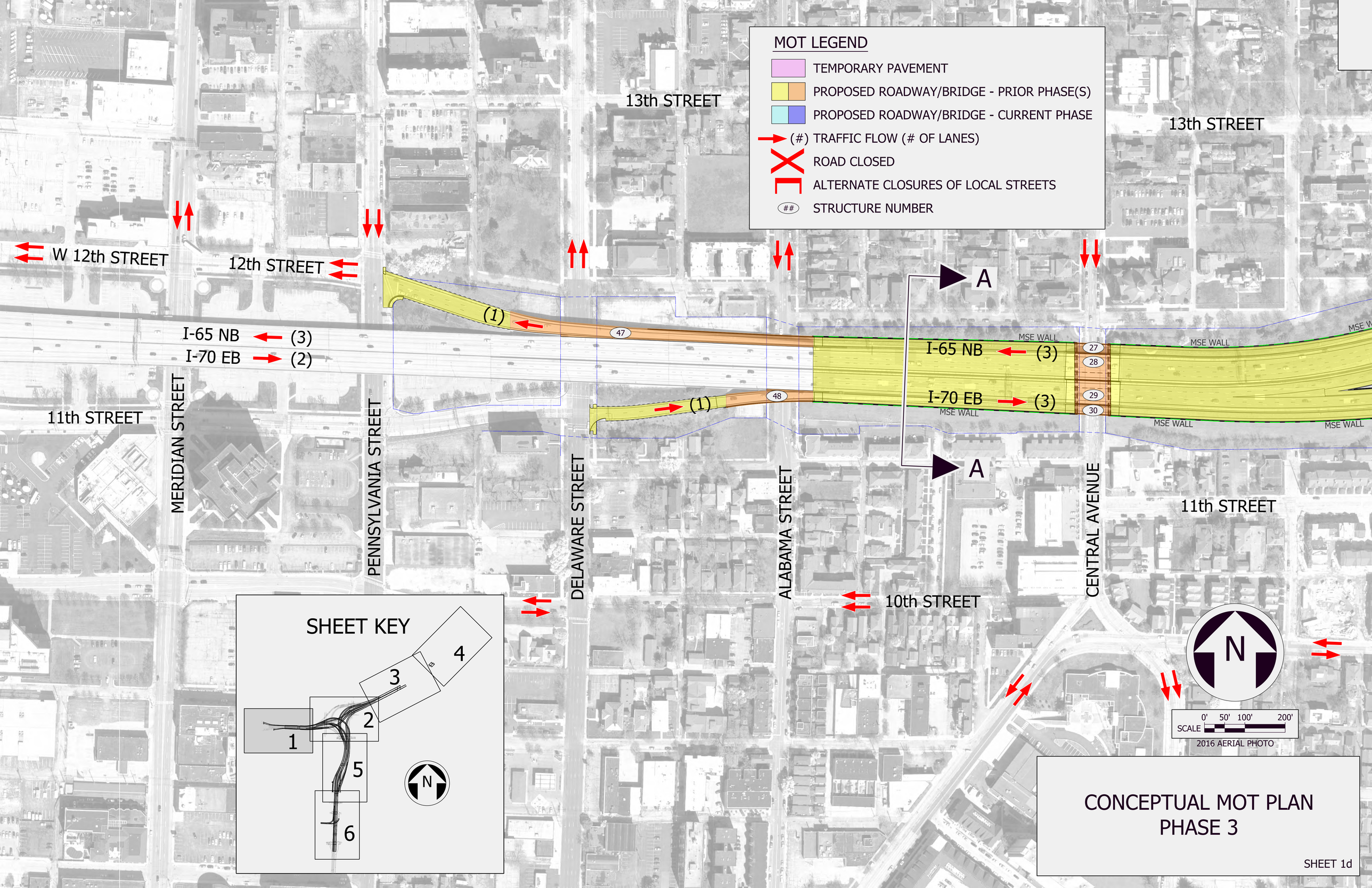
MOT LEGEND
TEMPORARY PAVEMENT
PROPOSED ROADWAY/BRIDGE - PRIOR PHASE(S)
PROPOSED ROADWAY/BRIDGE - CURRENT PHASE
(#) TRAFFIC FLOW (# OF LANES)
ROAD CLOSED
ALTERNATE CLOSURES OF LOCAL STREETS
STRUCTURE NUMBER
13th STREET
13th STREET
W 12th STREET
12th STREET
I-65 NB (3)
I-70 EB (2)
(1)
47
48
(1)
A
A
I-65 NB (3)
I-70 EB (3)
MSE WALL
MSE WALL
MSE WALL
MSE WALL
MSE WALL
27
28
29
30
11th STREET
11th STREET
MERIDIAN STREET
PENNSYLVANIA STREET
DELAWARE STREET
ALABAMA STREET
CENTRAL AVENUE
10th STREET
SHEET KEY
1
2
3
4
5
6
N
N
0' 50' 100' 200'
SCALE
2016 AERIAL PHOTO
CONCEPTUAL MOT PLAN
PHASE 3
SHEET 1d

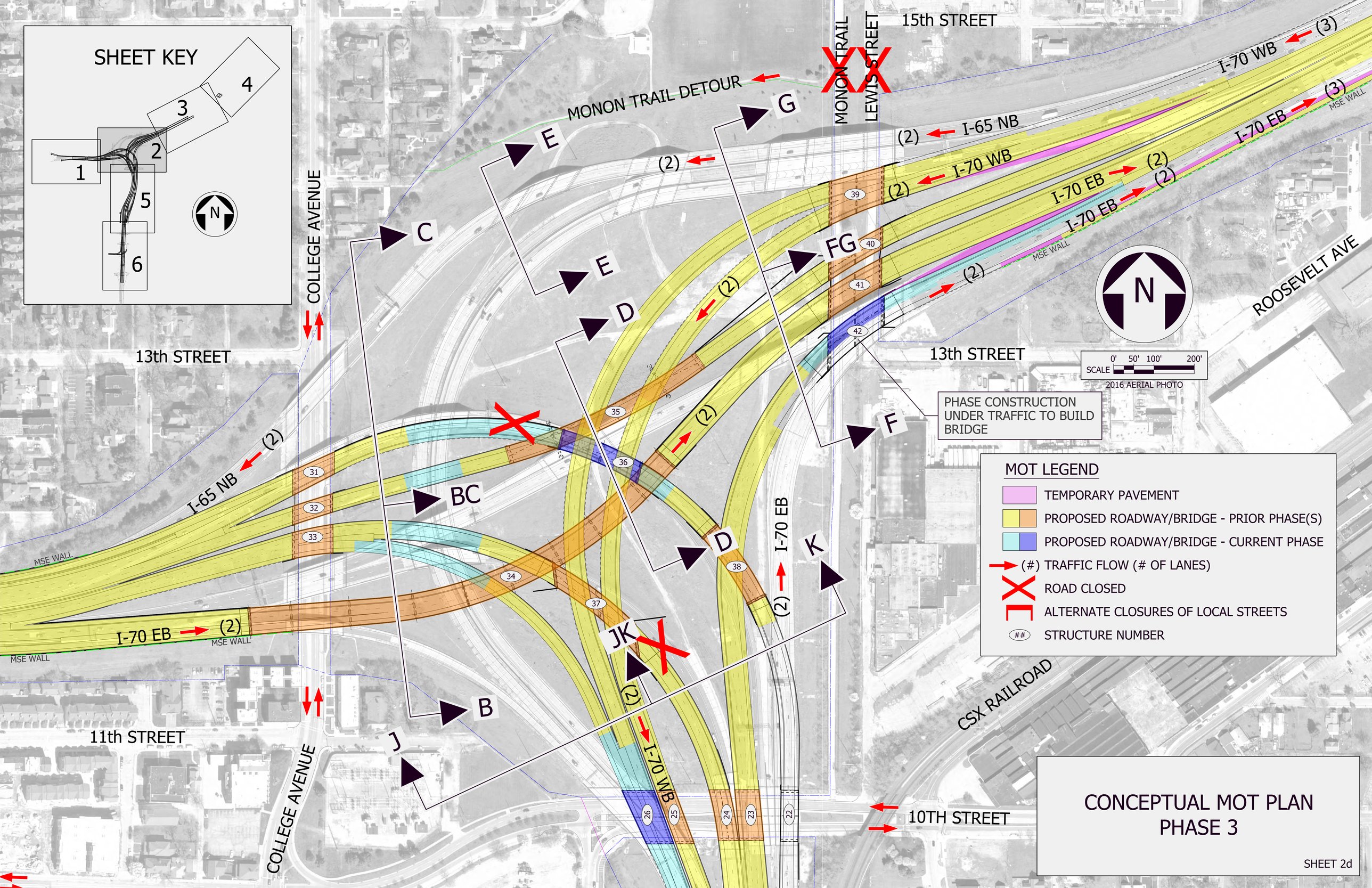
SHEET KEY
1
2
3
4
5
6
N
MONON TRAIL DETOUR
MONON TRAIL
LEWIS STREET
15th STREET
I-70 WB
(3)
I-65 NB
(2)
I-70 EB
MSE WALL
COLLEGE AVENUE
13th STREET
ROOSEVELT AVE
SCALE 0' 50' 100' 200'
2016 AERIAL PHOTO
PHASE CONSTRUCTION UNDER TRAFFIC TO BUILD BRIDGE
MOT LEGEND
TEMPORARY PAVEMENT
PROPOSED ROADWAY/BRIDGE - PRIOR PHASE(S)
PROPOSED ROADWAY/BRIDGE - CURRENT PHASE
(#) TRAFFIC FLOW (# OF LANES)
ROAD CLOSED
ALTERNATE CLOSURES OF LOCAL STREETS
STRUCTURE NUMBER
11th STREET
CSX RAILROAD
10TH STREET
CONCEPTUAL MOT PLAN
PHASE 3
SHEET 2d

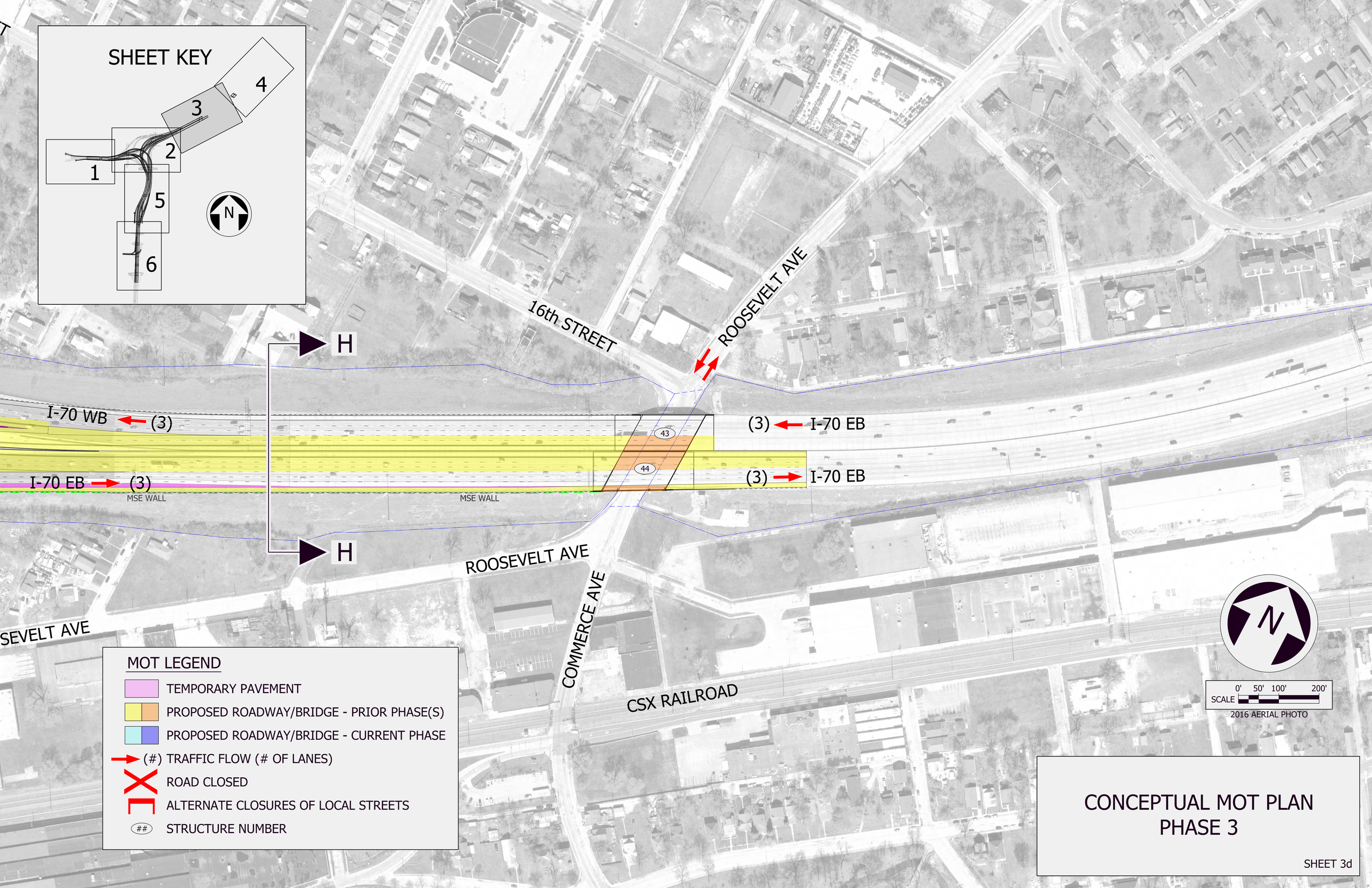
SHEET KEY
1
2
3
4
5
6
N
H
H
16th STREET
ROOSEVELT AVE
ROOSEVELT AVE
COMMERCE AVE
CSX RAILROAD
SEVELT AVE
I-70 WB
(3)
I-70 EB
(3)
43
44
(3)
I-70 EB
(3)
I-70 EB
MSE WALL
MSE WALL
MOT LEGEND
TEMPORARY PAVEMENT
PROPOSED ROADWAY/BRIDGE - PRIOR PHASE(S)
PROPOSED ROADWAY/BRIDGE - CURRENT PHASE
(#) TRAFFIC FLOW (# OF LANES)
ROAD CLOSED
ALTERNATE CLOSURES OF LOCAL STREETS
STRUCTURE NUMBER
N
0' 50' 100' 200'
SCALE
2016 AERIAL PHOTO
CONCEPTUAL MOT PLAN
PHASE 3
SHEET 3d

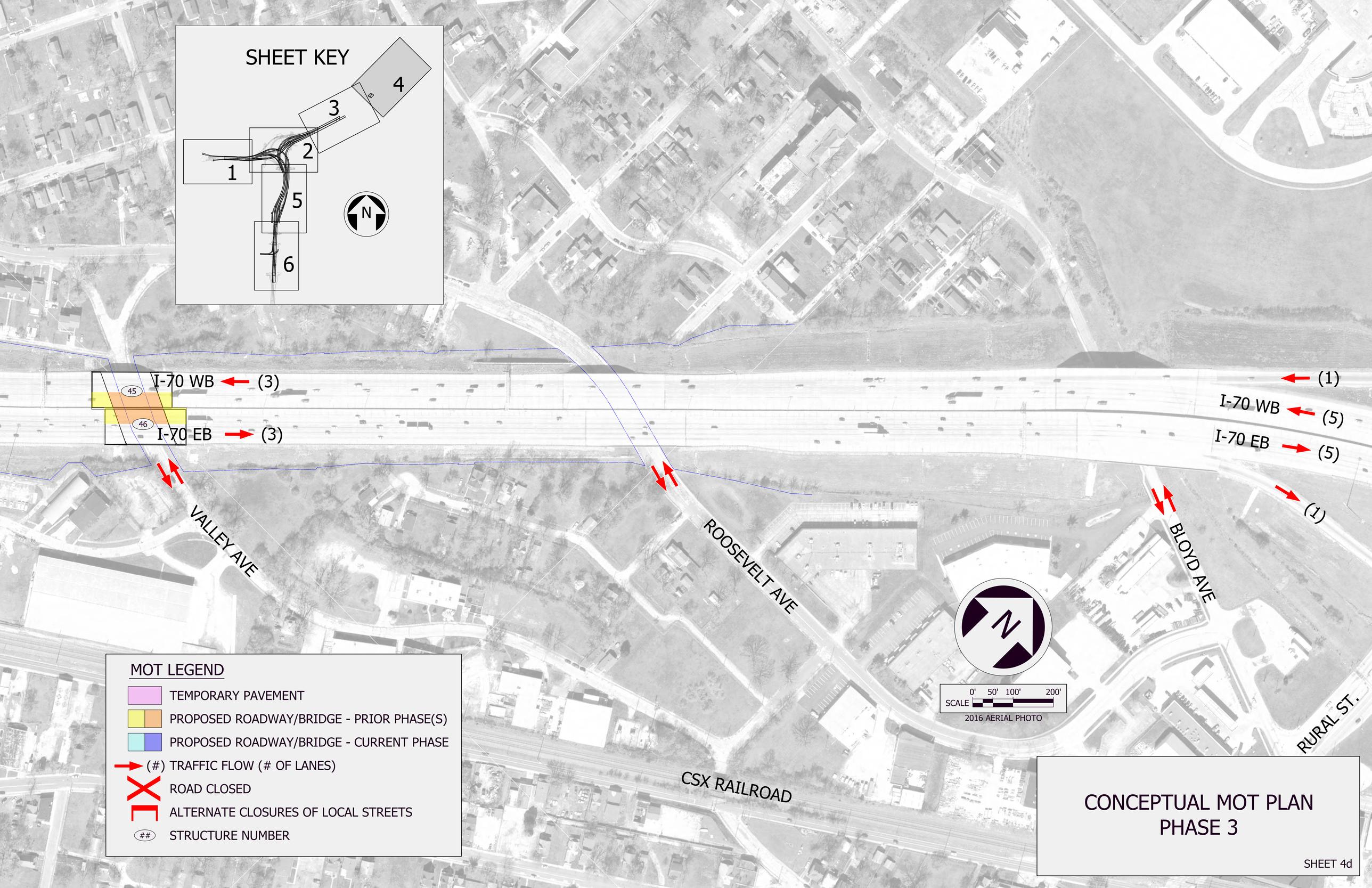

CONCEPTUAL MOT PLAN
PHASE 3

SHEET 4d

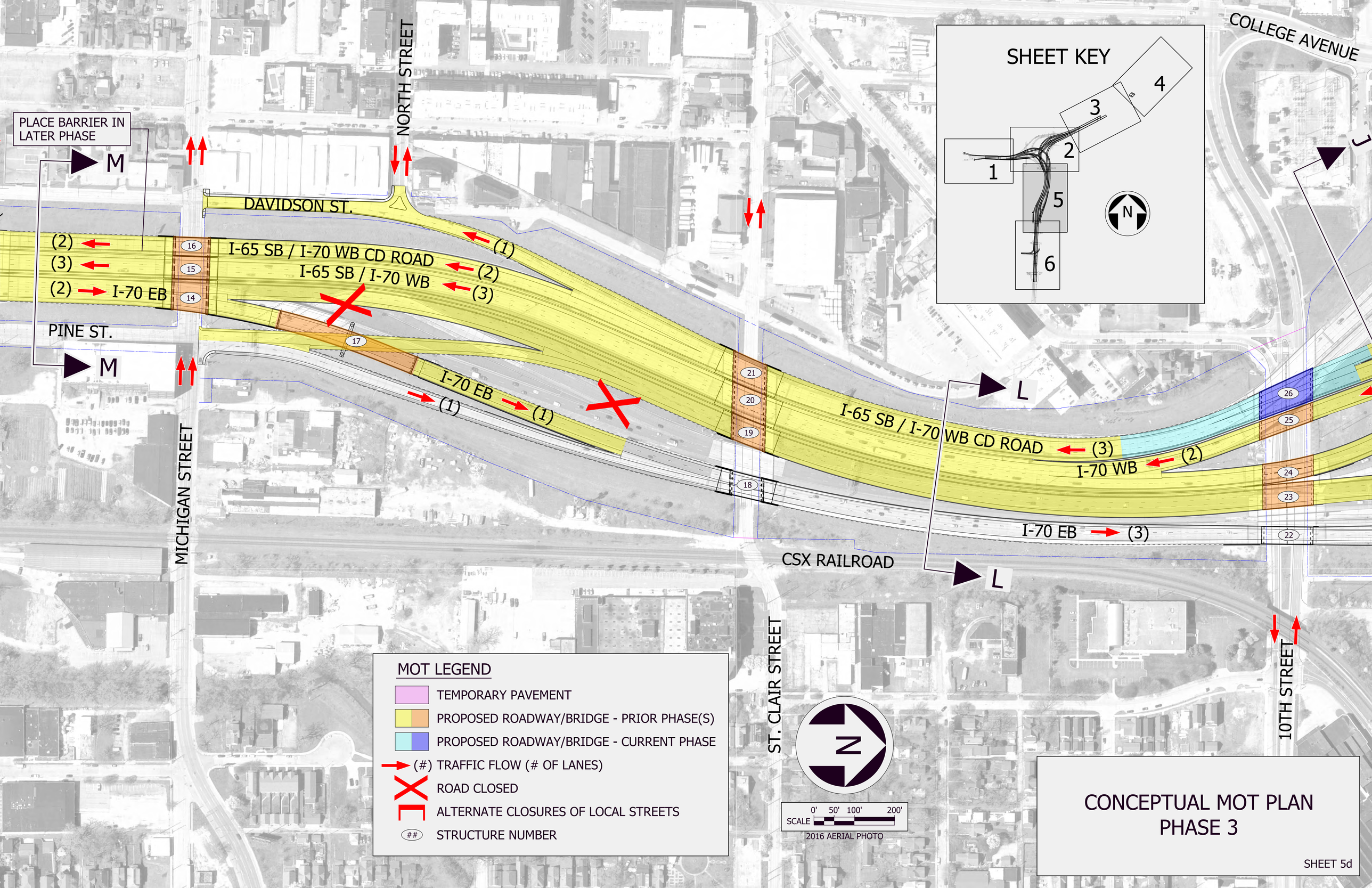
PLACE BARRIER IN LATER PHASE
M
M
NORTH STREET
DAVIDSON ST.
(2)
(3)
(2)
I-70 EB
16
15
14
I-65 SB / I-70 WB CD ROAD
I-65 SB / I-70 WB
(1)
(2)
(3)
PINE ST.
17
I-70 EB
(1)
(1)
21
20
19
18
I-65 SB / I-70 WB CD ROAD
(3)
I-70 WB
(2)
26
25
24
23
22
I-70 EB
(3)
L
L
J
COLLEGE AVENUE
SHEET KEY
1
2
3
4
5
6
N
MICHIGAN STREET
CSX RAILROAD
ST. CLAIR STREET
10TH STREET
N
0' 50' 100' 200'
SCALE
2016 AERIAL PHOTO
MOT LEGEND
TEMPORARY PAVEMENT
PROPOSED ROADWAY/BRIDGE - PRIOR PHASE(S)
PROPOSED ROADWAY/BRIDGE - CURRENT PHASE
(#) TRAFFIC FLOW (# OF LANES)
ROAD CLOSED
ALTERNATE CLOSURES OF LOCAL STREETS
STRUCTURE NUMBER
CONCEPTUAL MOT PLAN
PHASE 3
SHEET 5d

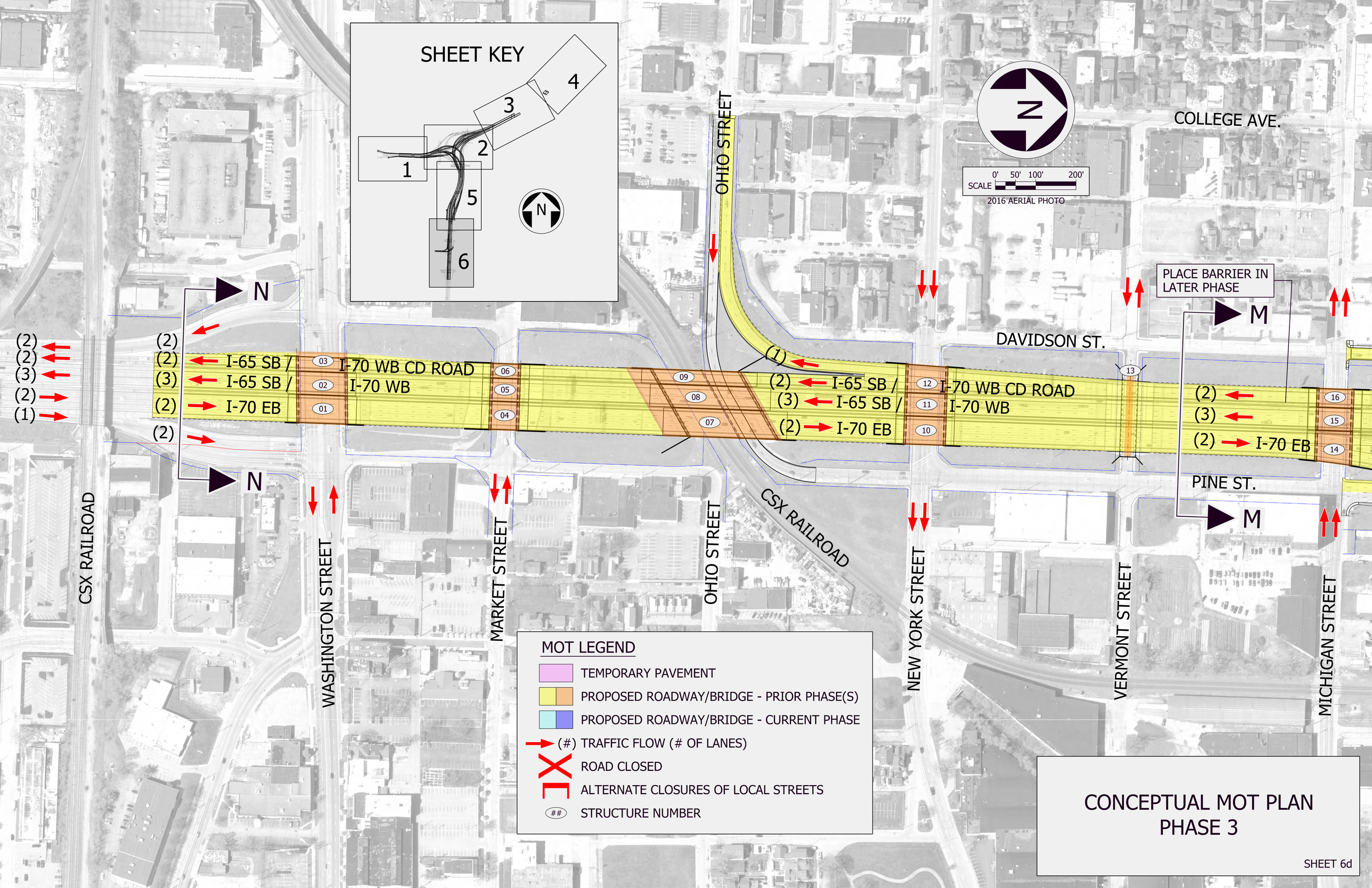
SHEET KEY
1
2
3
4
5
6
N
SCALE 0' 50' 100' 200'
2016 AERIAL PHOTO
COLLEGE AVE.
OHIO STREET
PLACE BARRIER IN LATER PHASE
DAVIDSON ST.
PINE ST.
CSX RAILROAD
WASHINGTON STREET
MARKET STREET
OHIO STREET
CSX RAILROAD
NEW YORK STREET
VERMONT STREET
MICHIGAN STREET
(2) I-65 SB / I-70 WB CD ROAD 03
(3) I-65 SB / I-70 WB 02
(2) I-70 EB 01
(2) 06
(2) 05
(1) 04
09
08
07
(1)
(2) I-65 SB / I-70 WB CD ROAD 12
(3) I-65 SB / I-70 WB 11
(2) I-70 EB 10
13
(2) 16
(3) 15
(2) I-70 EB 14
(2)
(2)
(3)
(2)
(1)
(2)
N
N
M
M
MOT LEGEND
TEMPORARY PAVEMENT
PROPOSED ROADWAY/BRIDGE - PRIOR PHASE(S)
PROPOSED ROADWAY/BRIDGE - CURRENT PHASE
(#) TRAFFIC FLOW (# OF LANES)
ROAD CLOSED
ALTERNATE CLOSURES OF LOCAL STREETS
STRUCTURE NUMBER
CONCEPTUAL MOT PLAN
PHASE 3
SHEET 6d

Attachment D

Local Detour Concept Maps

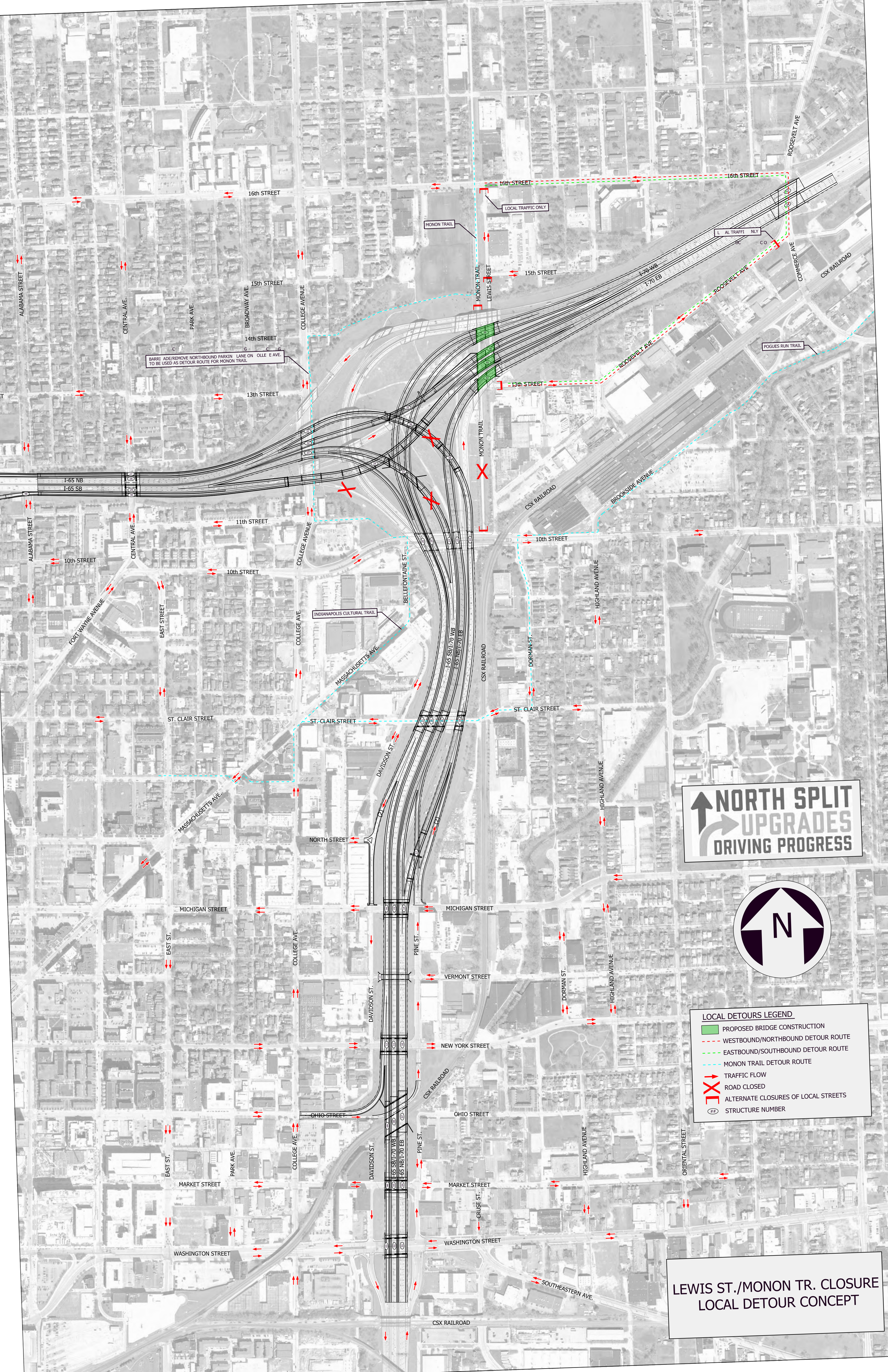
NORTH SPLIT
UPGRADES
DRIVING PROGRESS
N
LOCAL DETOURS LEGEND
PROPOSED BRIDGE CONSTRUCTION
WESTBOUND/NORTHBOUND DETOUR ROUTE
EASTBOUND/SOUTHBOUND DETOUR ROUTE
MONON TRAIL DETOUR ROUTE
TRAFFIC FLOW
ROAD CLOSED
ALTERNATE CLOSURES OF LOCAL STREETS
STRUCTURE NUMBER
LEWIS ST./MONON TR. CLOSURE
LOCAL DETOUR CONCEPT
16th STREET
LOCAL TRAFFIC ONLY
MONON TRAIL
15th STREET
14th STREET
13th STREET
11th STREET
10th STREET
ST. CLAIR STREET
NORTH STREET
MICHIGAN STREET
VERMONT STREET
NEW YORK STREET
OHIO STREET
MARKET STREET
WASHINGTON STREET
SOUTHEASTERN AVE.
CRUSE ST.
ALABAMA STREET
CENTRAL AVE.
PARK AVE.
BROADWAY AVE.
COLLEGE AVENUE
COLLEGE AVE.
LEWIS STREET
ROOSEVELT AVE
COMMERCE AVE
CSX RAILROAD
POGUES RUN TRAIL
BROOKSIDE AVENUE
HIGHLAND AVENUE
DORMAN ST.
PINE ST.
DAVIDSON ST.
BELLEFONTAINE ST.
INDIANAPOLIS CULTURAL TRAIL
MASSACHUSETTS AVE.
FORT WAYNE AVENUE
EAST STREET
EAST ST.
ORIENTAL STREET
I-65 NB
I-65 SB
I-70 WB
I-70 EB
I-65 SB/I-70 WB
I-65 NB/I-70 EB
BARRI ADE/REMOVE NORTHBOUND PARKIN LANE ON OLLE E AVE.
TO BE USED AS DETOUR ROUTE FOR MONON TRAIL

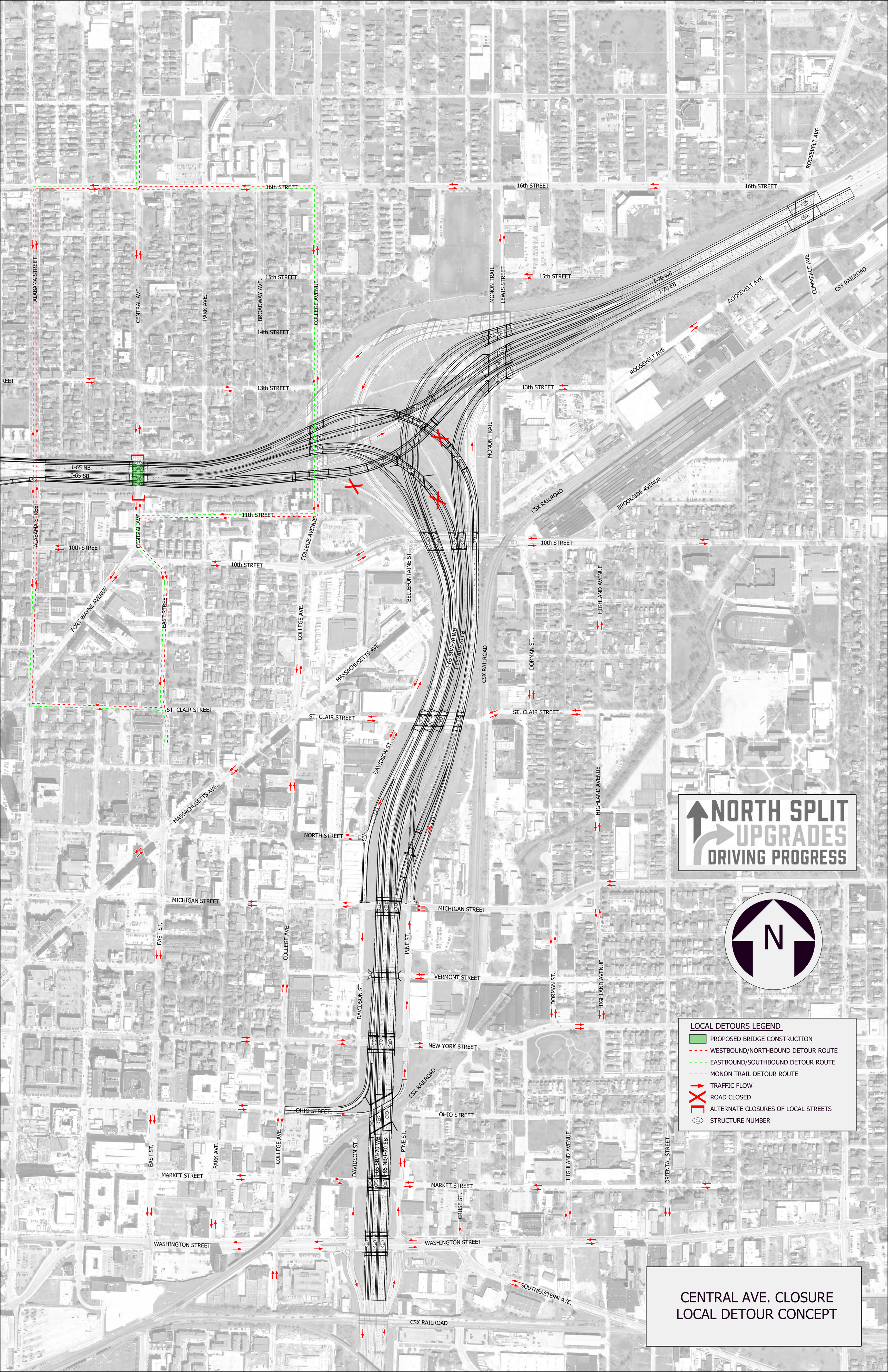
16th STREET
15th STREET
14th STREET
13th STREET
11th STREET
10th STREET
ST. CLAIR STREET
NORTH STREET
MICHIGAN STREET
VERMONT STREET
NEW YORK STREET
OHIO STREET
MARKET STREET
WASHINGTON STREET
SOUTHEASTERN AVE.
ALABAMA STREET
CENTRAL AVE.
PARK AVE.
BROADWAY AVE.
COLLEGE AVENUE
COLLEGE AVE.
FORT WAYNE AVENUE
EAST STREET
EAST ST.
MASSACHUSETTS AVE.
BELLEFONTAINE ST.
DAVIDSON ST.
PINE ST.
MONON TRAIL
LEWIS STREET
CRUSE ST.
DORMAN ST.
HIGHLAND AVENUE
ORIENTAL STREET
ROOSEVELT AVE
COMMERCE AVE
BROOKSIDE AVENUE
CSX RAILROAD
I-65 NB
I-65 SB
I-70 WB
I-70 EB
I-65 SB/I-70 WB
I-65 NB/I-70 EB
NORTH SPLIT
UPGRADES
DRIVING PROGRESS
N
LOCAL DETOURS LEGEND
PROPOSED BRIDGE CONSTRUCTION
WESTBOUND/NORTHBOUND DETOUR ROUTE
EASTBOUND/SOUTHBOUND DETOUR ROUTE
MONON TRAIL DETOUR ROUTE
TRAFFIC FLOW
ROAD CLOSED
ALTERNATE CLOSURES OF LOCAL STREETS
STRUCTURE NUMBER
CENTRAL AVE. CLOSURE
LOCAL DETOUR CONCEPT

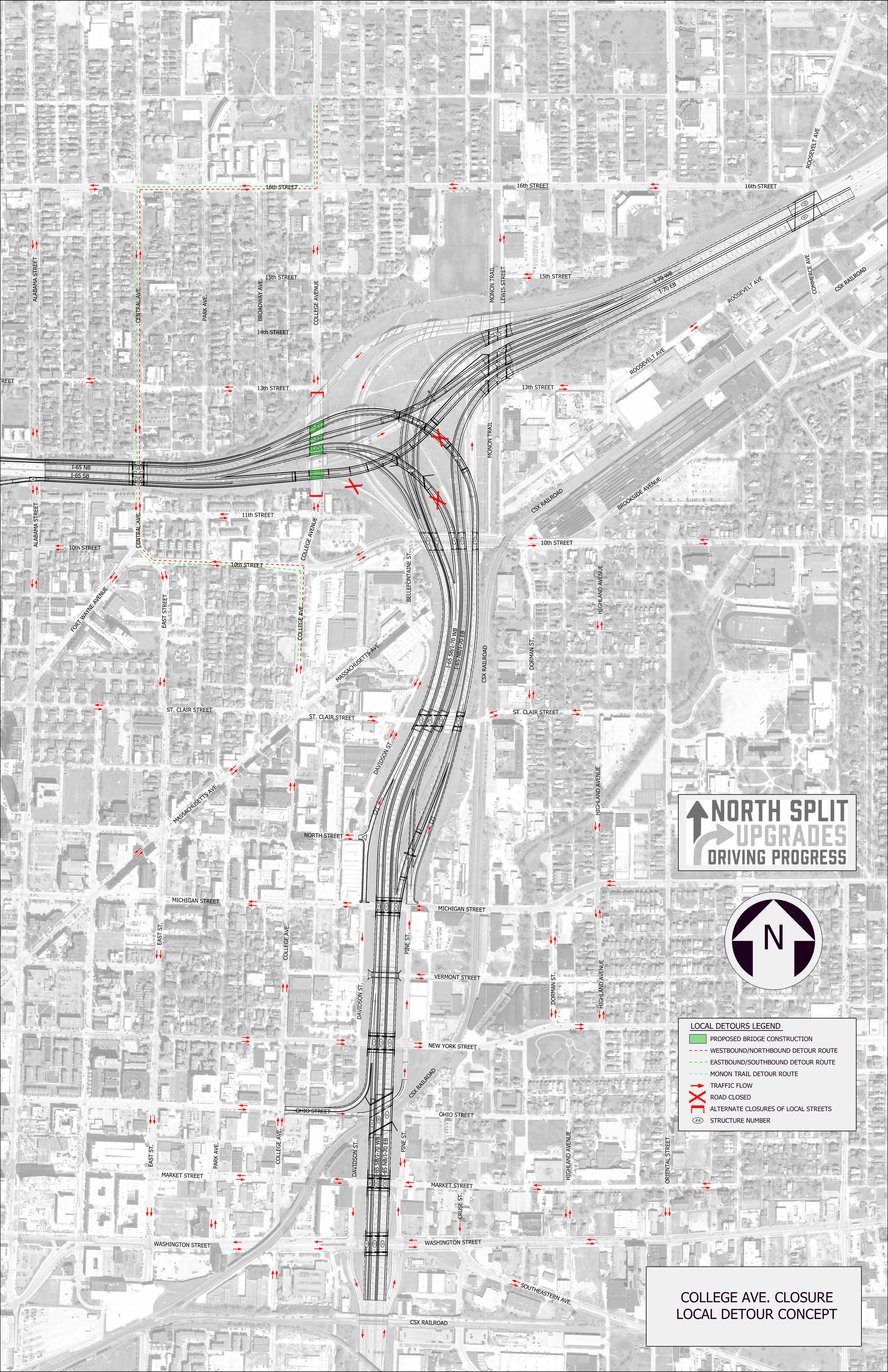
16th STREET
15th STREET
14th STREET
13th STREET
11th STREET
10th STREET
ST. CLAIR STREET
NORTH STREET
MICHIGAN STREET
VERMONT STREET
NEW YORK STREET
OHIO STREET
MARKET STREET
WASHINGTON STREET
SOUTHEASTERN AVE.
ALABAMA STREET
CENTRAL AVE.
PARK AVE.
BROADWAY AVE.
COLLEGE AVENUE
COLLEGE AVE.
MONON TRAIL
LEWIS STREET
ROOSEVELT AVE
COMMERCE AVE
CSX RAILROAD
BROOKSIDE AVENUE
HIGHLAND AVENUE
DORMAN ST.
BELLEFONTAINE ST.
FORT WAYNE AVENUE
EAST STREET
EAST ST.
MASSACHUSETTS AVE.
DAVIDSON ST.
PINE ST.
CRUSE ST.
ORIENTAL STREET
I-70 WB
I-70 EB
I-65 NB
I-65 SB
I-65 SB/I-70 WB
I-65 NB/I-70 EB
NORTH SPLIT
UPGRADES
DRIVING PROGRESS
N
LOCAL DETOURS LEGEND
PROPOSED BRIDGE CONSTRUCTION
WESTBOUND/NORTHBOUND DETOUR ROUTE
EASTBOUND/SOUTHBOUND DETOUR ROUTE
MONON TRAIL DETOUR ROUTE
TRAFFIC FLOW
ROAD CLOSED
ALTERNATE CLOSURES OF LOCAL STREETS
STRUCTURE NUMBER
COLLEGE AVE. CLOSURE
LOCAL DETOUR CONCEPT

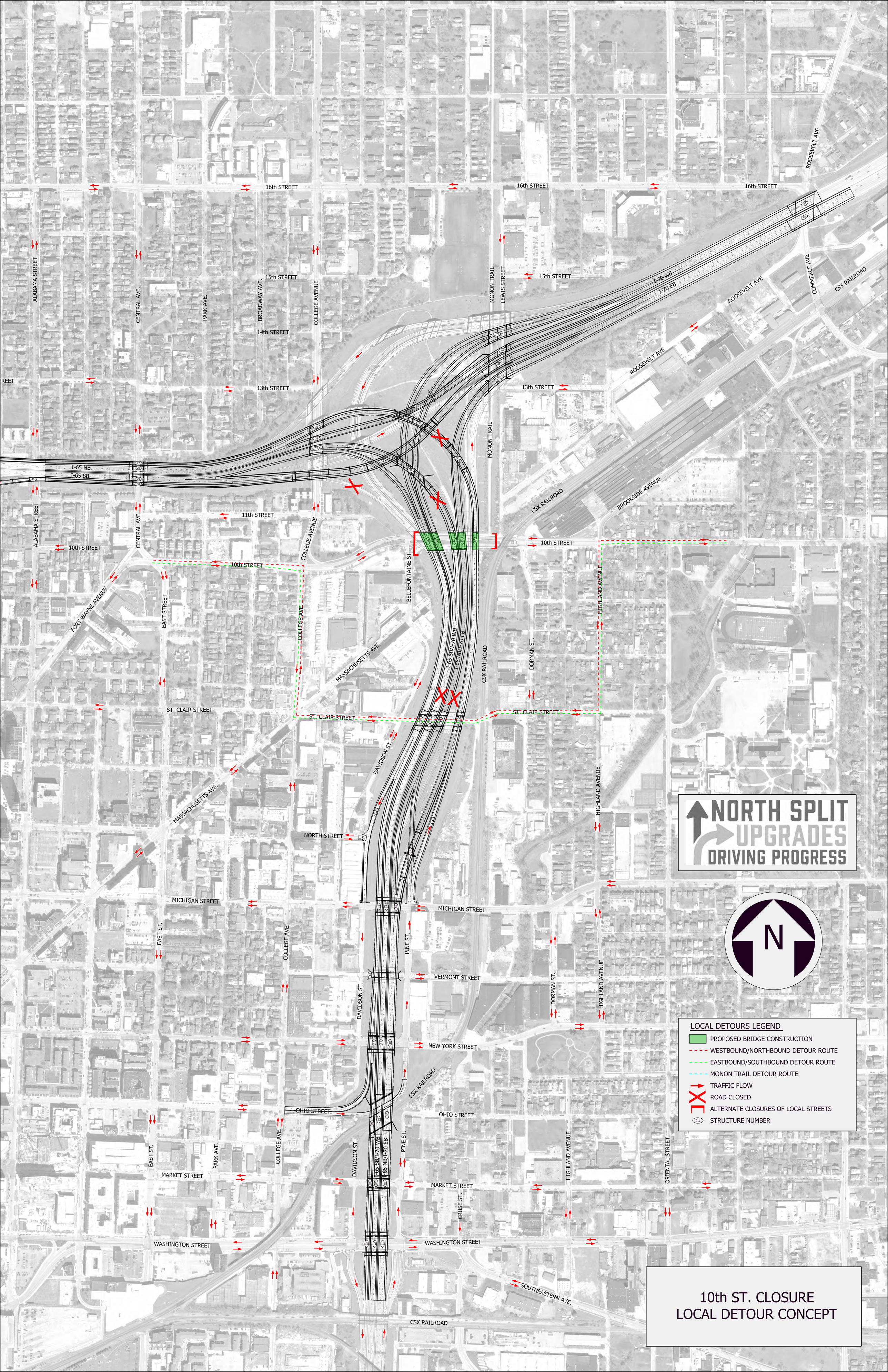
16th STREET
15th STREET
14th STREET
13th STREET
11th STREET
10th STREET
ST. CLAIR STREET
NORTH STREET
MICHIGAN STREET
VERMONT STREET
NEW YORK STREET
OHIO STREET
MARKET STREET
WASHINGTON STREET
ALABAMA STREET
CENTRAL AVE.
PARK AVE.
BROADWAY AVE.
COLLEGE AVENUE
MONON TRAIL
LEWIS STREET
ROOSEVELT AVE
COMMERCE AVE
CSX RAILROAD
BROOKSIDE AVENUE
HIGHLAND AVENUE
DORMAN ST.
BELLEFONTAINE ST.
FORT WAYNE AVENUE
EAST STREET
MASSACHUSETTS AVE.
DAVIDSON ST.
PINE ST.
CRUSE ST.
ORIENTAL STREET
SOUTHEASTERN AVE.
I-70 WB
I-70 EB
I-65 NB
I-65 SB
I-65 SB/I-70 WB
I-65 NB/I-70 EB
NORTH SPLIT
UPGRADES
DRIVING PROGRESS
N
LOCAL DETOURS LEGEND
PROPOSED BRIDGE CONSTRUCTION
WESTBOUND/NORTHBOUND DETOUR ROUTE
EASTBOUND/SOUTHBOUND DETOUR ROUTE
MONON TRAIL DETOUR ROUTE
TRAFFIC FLOW
ROAD CLOSED
ALTERNATE CLOSURES OF LOCAL STREETS
STRUCTURE NUMBER
10th ST. CLOSURE
LOCAL DETOUR CONCEPT

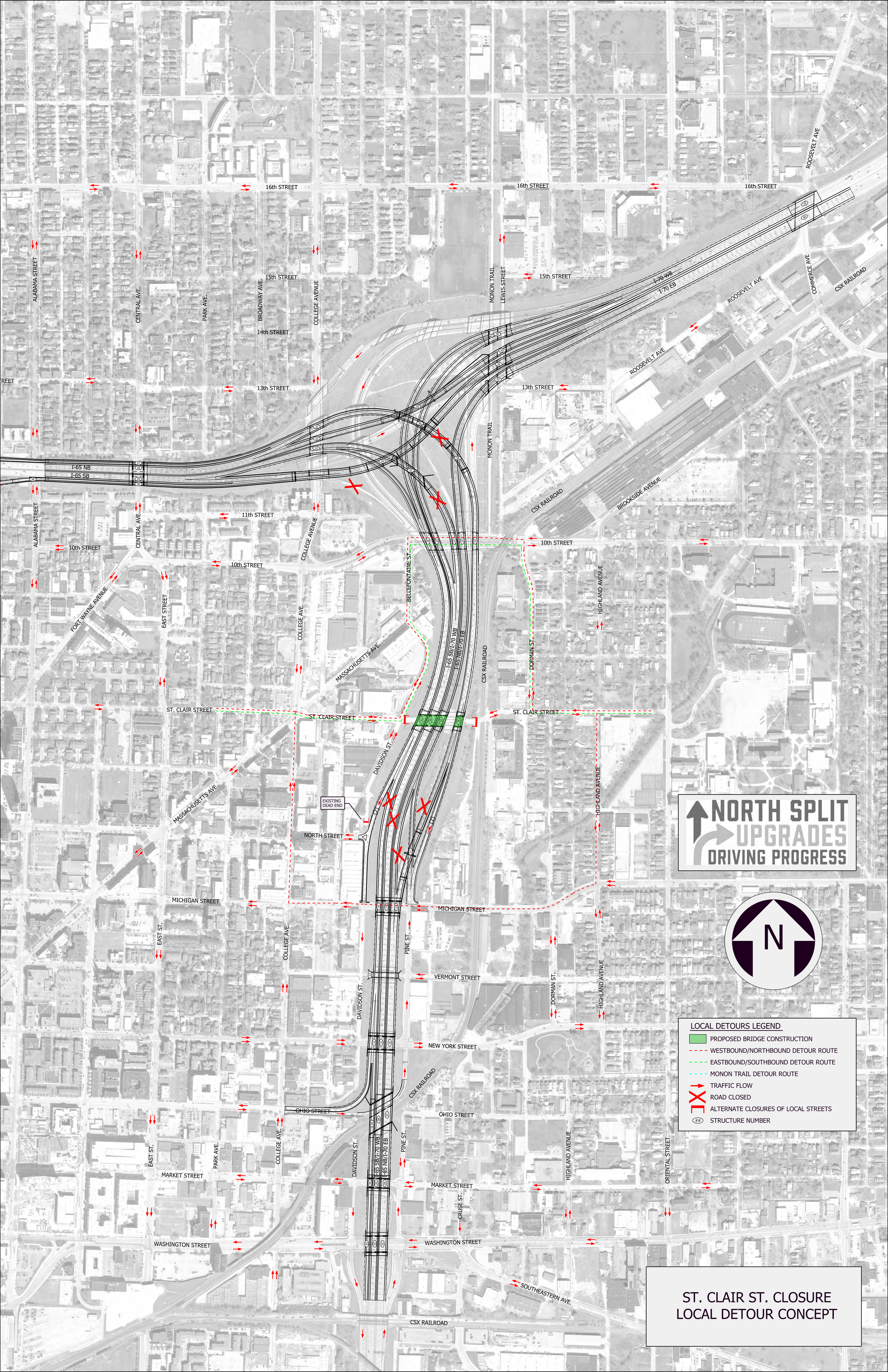
16th STREET
15th STREET
14th STREET
13th STREET
11th STREET
10th STREET
ST. CLAIR STREET
MICHIGAN STREET
VERMONT STREET
NEW YORK STREET
OHIO STREET
MARKET STREET
WASHINGTON STREET
ALABAMA STREET
CENTRAL AVE.
PARK AVE.
BROADWAY AVE.
COLLEGE AVENUE
COLLEGE AVE.
MONON TRAIL
LEWIS STREET
ROOSEVELT AVE
COMMERCE AVE
CSX RAILROAD
BROOKSIDE AVENUE
HIGHLAND AVENUE
DORMAN ST.
BELLEFONTAINE ST.
DAVIDSON ST.
PINE ST.
CRUSE ST.
ORIENTAL STREET
EAST ST.
FORT WAYNE AVENUE
MASSACHUSETTS AVE.
SOUTHEASTERN AVE.
I-70 WB
I-70 EB
I-65 NB
I-65 SB
I-65 SB/I-70 WB
I-65 NB/I-70 EB
EXISTING DEAD END
NORTH SPLIT UPGRADES DRIVING PROGRESS
N
LOCAL DETOURS LEGEND
PROPOSED BRIDGE CONSTRUCTION
WESTBOUND/NORTHBOUND DETOUR ROUTE
EASTBOUND/SOUTHBOUND DETOUR ROUTE
MONON TRAIL DETOUR ROUTE
TRAFFIC FLOW
ROAD CLOSED
ALTERNATE CLOSURES OF LOCAL STREETS
STRUCTURE NUMBER
ST. CLAIR ST. CLOSURE
LOCAL DETOUR CONCEPT

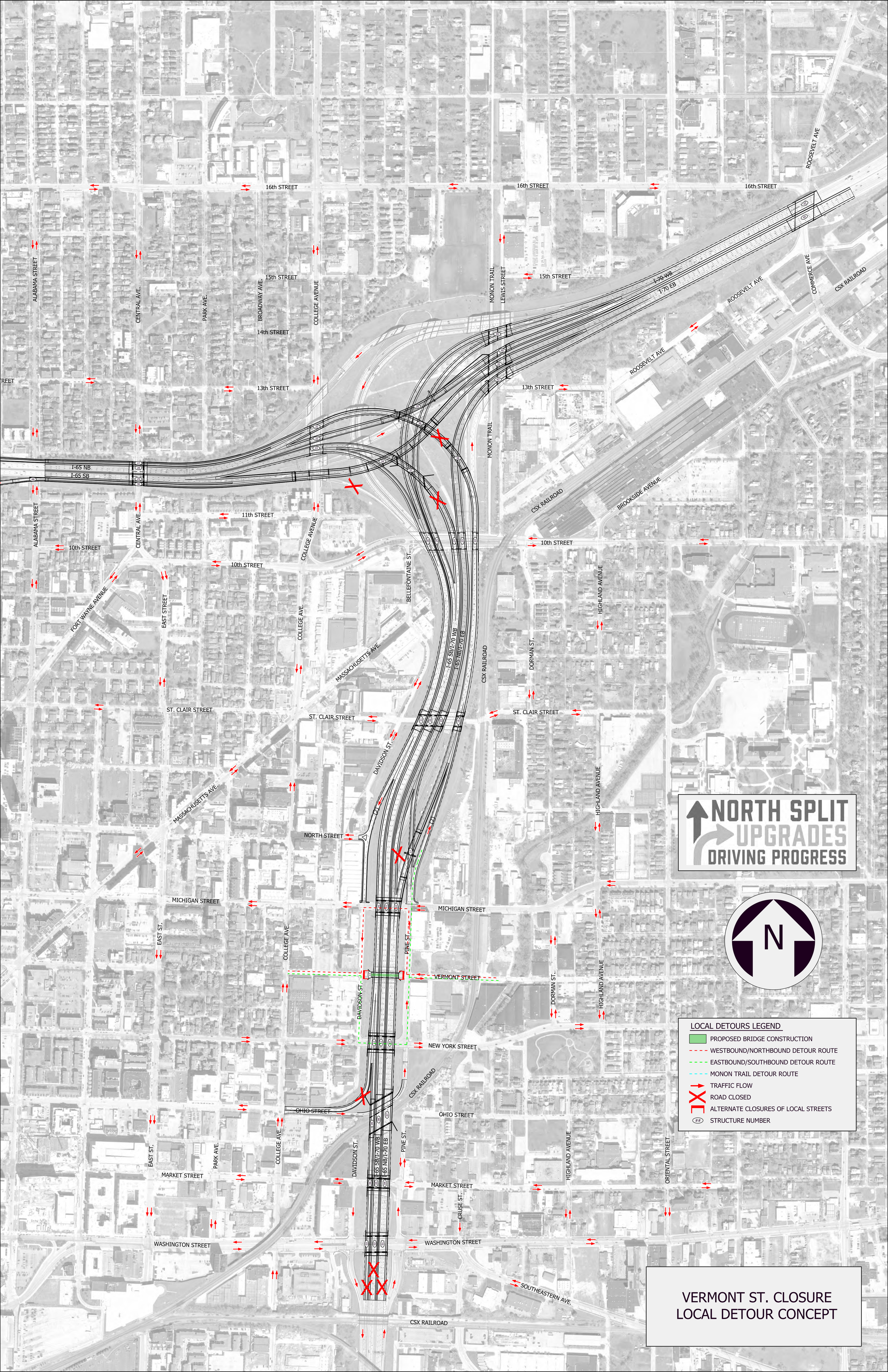
NORTH SPLIT
UPGRADES
DRIVING PROGRESS
N
LOCAL DETOURS LEGEND
PROPOSED BRIDGE CONSTRUCTION
WESTBOUND/NORTHBOUND DETOUR ROUTE
EASTBOUND/SOUTHBOUND DETOUR ROUTE
MONON TRAIL DETOUR ROUTE
TRAFFIC FLOW
ROAD CLOSED
ALTERNATE CLOSURES OF LOCAL STREETS
STRUCTURE NUMBER
16th STREET
15th STREET
14th STREET
13th STREET
11th STREET
10th STREET
ST. CLAIR STREET
MICHIGAN STREET
VERMONT STREET
NEW YORK STREET
OHIO STREET
MARKET STREET
WASHINGTON STREET
NORTH STREET
ALABAMA STREET
CENTRAL AVE.
PARK AVE.
BROADWAY AVE.
COLLEGE AVENUE
COLLEGE AVE.
MONON TRAIL
LEWIS STREET
ROOSEVELT AVE
COMMERCE AVE
CSX RAILROAD
BROOKSIDE AVENUE
HIGHLAND AVENUE
DORMAN ST.
BELLEFONTAINE ST.
FORT WAYNE AVENUE
EAST STREET
EAST ST.
MASSACHUSETTS AVE.
DAVIDSON ST.
PINE ST.
CRUSE ST.
ORIENTAL STREET
SOUTHEASTERN AVE.
I-70 WB
I-70 EB
I-65 NB
I-65 SB
I-65 SB/I-70 WB
I-65 NB/I-70 EB
VERMONT ST. CLOSURE
LOCAL DETOUR CONCEPT

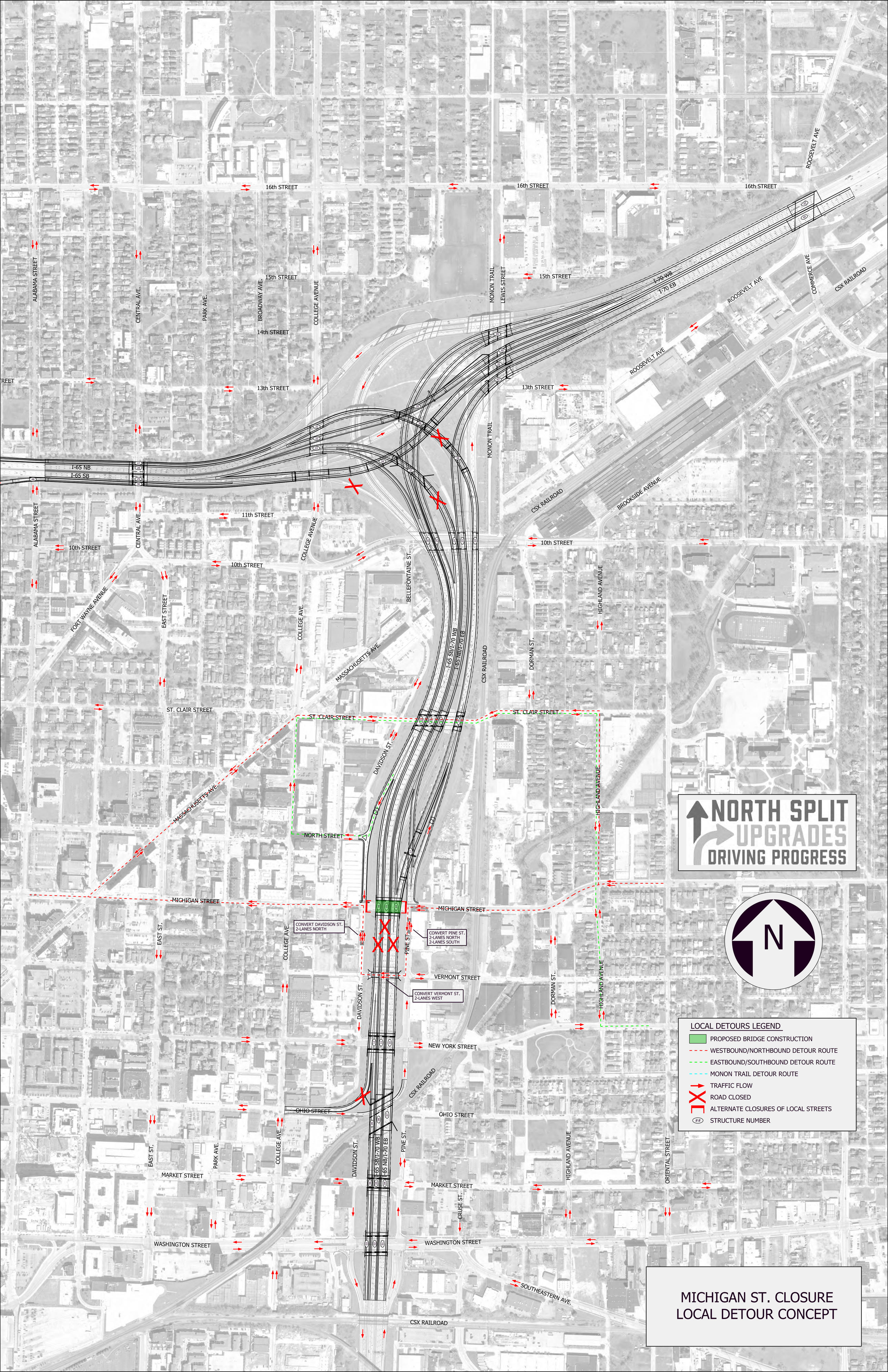
NORTH SPLIT
UPGRADES
DRIVING PROGRESS
N
LOCAL DETOURS LEGEND
PROPOSED BRIDGE CONSTRUCTION
WESTBOUND/NORTHBOUND DETOUR ROUTE
EASTBOUND/SOUTHBOUND DETOUR ROUTE
MONON TRAIL DETOUR ROUTE
TRAFFIC FLOW
ROAD CLOSED
ALTERNATE CLOSURES OF LOCAL STREETS
STRUCTURE NUMBER
MICHIGAN ST. CLOSURE
LOCAL DETOUR CONCEPT
16th STREET
15th STREET
14th STREET
13th STREET
11th STREET
10th STREET
ST. CLAIR STREET
NORTH STREET
MICHIGAN STREET
VERMONT STREET
NEW YORK STREET
OHIO STREET
MARKET STREET
WASHINGTON STREET
SOUTHEASTERN AVE.
ALABAMA STREET
CENTRAL AVE.
PARK AVE.
BROADWAY AVE.
COLLEGE AVENUE
COLLEGE AVE.
MONON TRAIL
LEWIS STREET
ROOSEVELT AVE
COMMERCE AVE
CSX RAILROAD
BROOKSIDE AVENUE
BELLEFONTAINE ST.
HIGHLAND AVENUE
DORMAN ST.
DAVIDSON ST.
PINE ST.
CRUSE ST.
ORIENTAL STREET
EAST ST.
FORT WAYNE AVENUE
EAST STREET
MASSACHUSETTS AVE.
I-65 NB
I-65 SB
I-70 WB
I-70 EB
I-65 SB/I-70 WB
I-65 NB/I-70 EB
CONVERT DAVIDSON ST. 2-LANES NORTH
CONVERT PINE ST. 2-LANES NORTH 2-LANES SOUTH
CONVERT VERMONT ST. 2-LANES WEST

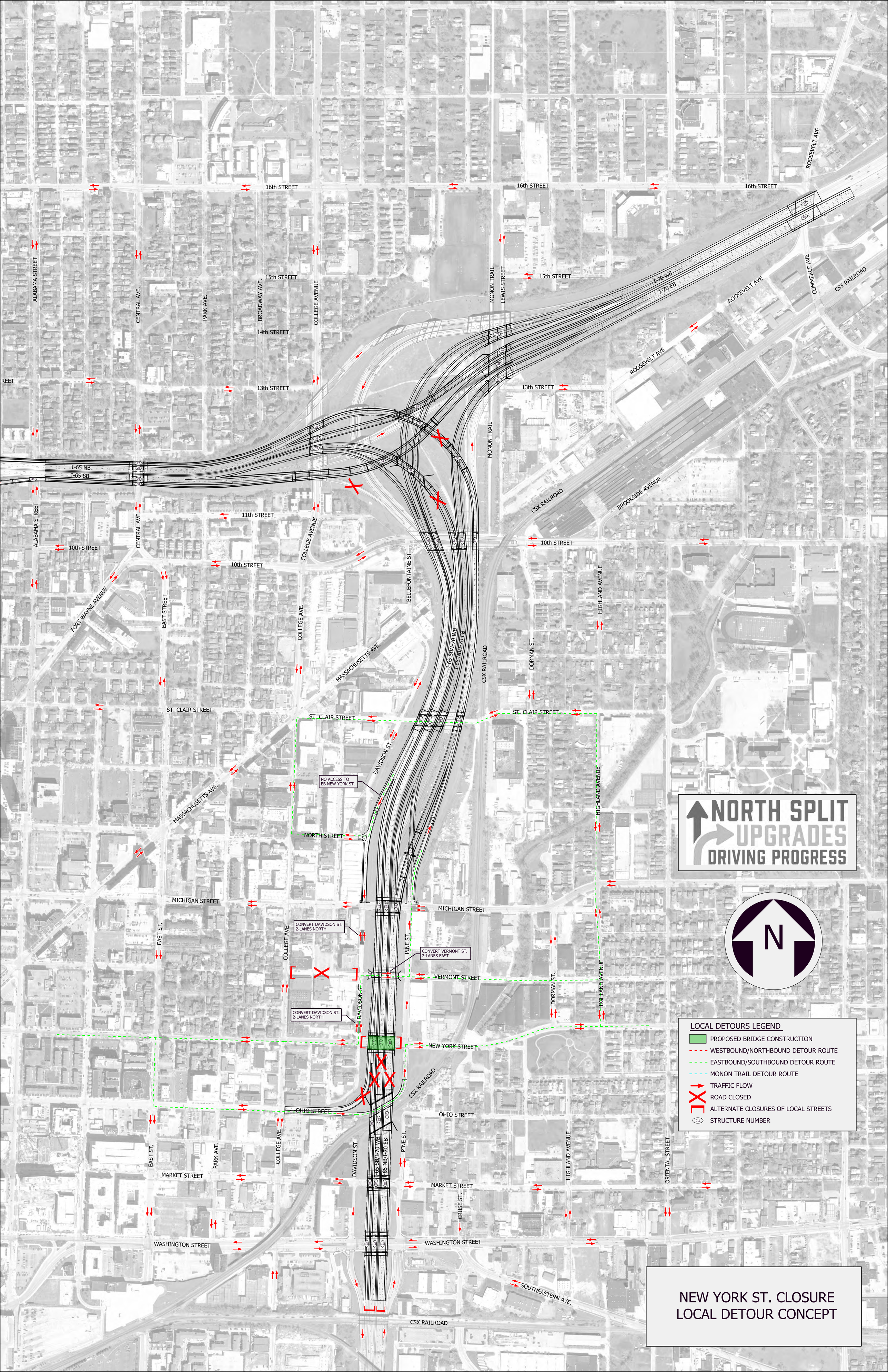
NORTH SPLIT
UPGRADES
DRIVING PROGRESS
N
LOCAL DETOURS LEGEND
PROPOSED BRIDGE CONSTRUCTION
WESTBOUND/NORTHBOUND DETOUR ROUTE
EASTBOUND/SOUTHBOUND DETOUR ROUTE
MONON TRAIL DETOUR ROUTE
TRAFFIC FLOW
ROAD CLOSED
ALTERNATE CLOSURES OF LOCAL STREETS
STRUCTURE NUMBER
NO ACCESS TO EB NEW YORK ST.
CONVERT DAVIDSON ST. 2-LANES NORTH
CONVERT VERMONT ST. 2-LANES EAST
CONVERT DAVIDSON ST. 2-LANES NORTH
I-65 NB
I-65 SB
I-70 WB
I-70 EB
I-65 SB/I-70 WB
I-65 NB/I-70 EB
16th STREET
15th STREET
14th STREET
13th STREET
11th STREET
10th STREET
ST. CLAIR STREET
NORTH STREET
MICHIGAN STREET
VERMONT STREET
NEW YORK STREET
OHIO STREET
MARKET STREET
WASHINGTON STREET
ALABAMA STREET
CENTRAL AVE.
PARK AVE.
BROADWAY AVE.
COLLEGE AVENUE
COLLEGE AVE.
MONON TRAIL
LEWIS STREET
ROOSEVELT AVE
COMMERCE AVE
CSX RAILROAD
BROOKSIDE AVENUE
HIGHLAND AVENUE
DORMAN ST.
BELLEFONTAINE ST.
FORT WAYNE AVENUE
EAST STREET
EAST ST.
MASSACHUSETTS AVE.
DAVIDSON ST.
PINE ST.
CRUSE ST.
ORIENTAL STREET
SOUTHEASTERN AVE.
NEW YORK ST. CLOSURE
LOCAL DETOUR CONCEPT

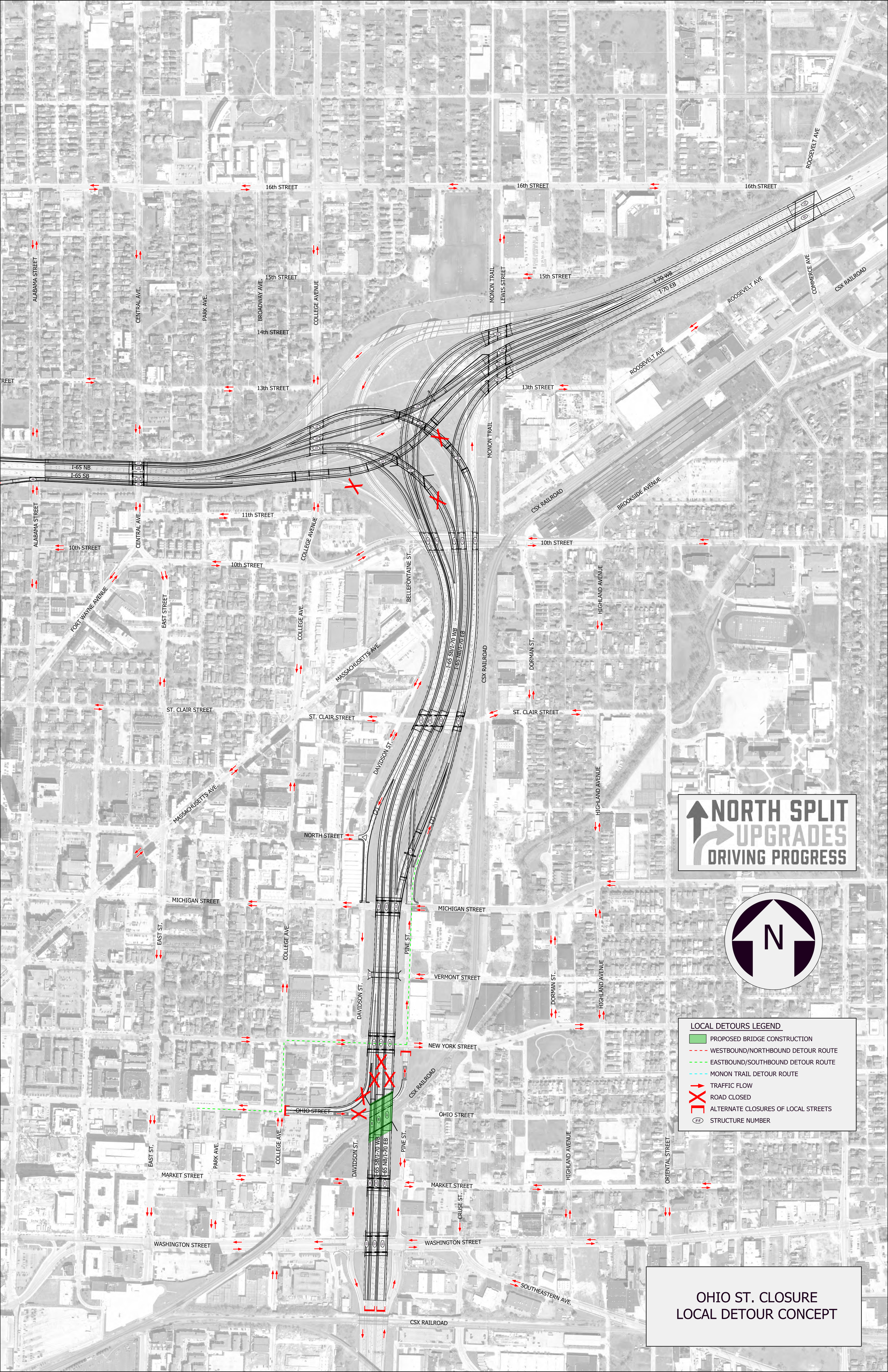
16th STREET
15th STREET
14th STREET
13th STREET
11th STREET
10th STREET
ST. CLAIR STREET
NORTH STREET
MICHIGAN STREET
VERMONT STREET
NEW YORK STREET
OHIO STREET
MARKET STREET
WASHINGTON STREET
ALABAMA STREET
CENTRAL AVE.
PARK AVE.
BROADWAY AVE.
COLLEGE AVENUE
COLLEGE AVE.
MONON TRAIL
LEWIS STREET
ROOSEVELT AVE
COMMERCE AVE
CSX RAILROAD
BROOKSIDE AVENUE
HIGHLAND AVENUE
DORMAN ST.
BELLEFONTAINE ST.
FORT WAYNE AVENUE
EAST STREET
EAST ST.
MASSACHUSETTS AVE.
DAVIDSON ST.
PINE ST.
CRUSE ST.
ORIENTAL STREET
SOUTHEASTERN AVE.
I-65 NB
I-65 SB
I-70 WB
I-70 EB
I-65 SB/I-70 WB
I-65 NB/I-70 EB
NORTH SPLIT
UPGRADES
DRIVING PROGRESS
N
LOCAL DETOURS LEGEND
PROPOSED BRIDGE CONSTRUCTION
WESTBOUND/NORTHBOUND DETOUR ROUTE
EASTBOUND/SOUTHBOUND DETOUR ROUTE
MONON TRAIL DETOUR ROUTE
TRAFFIC FLOW
ROAD CLOSED
ALTERNATE CLOSURES OF LOCAL STREETS
STRUCTURE NUMBER
OHIO ST. CLOSURE
LOCAL DETOUR CONCEPT

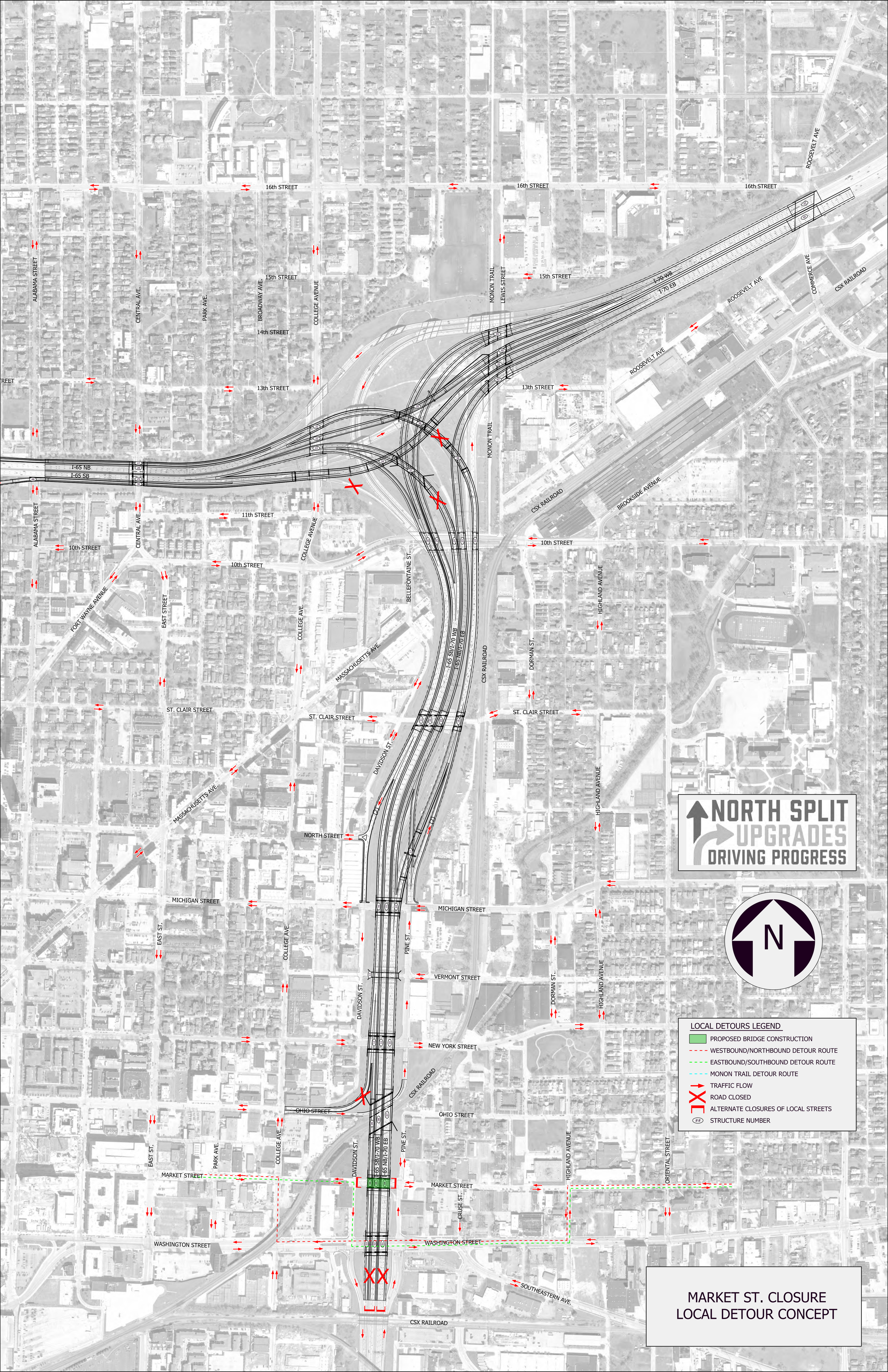
16th STREET
15th STREET
14th STREET
13th STREET
11th STREET
10th STREET
ST. CLAIR STREET
NORTH STREET
MICHIGAN STREET
VERMONT STREET
NEW YORK STREET
OHIO STREET
MARKET STREET
WASHINGTON STREET
ALABAMA STREET
CENTRAL AVE.
PARK AVE.
BROADWAY AVE.
COLLEGE AVENUE
COLLEGE AVE.
MONON TRAIL
LEWIS STREET
ROOSEVELT AVE
COMMERCE AVE
CSX RAILROAD
BROOKSIDE AVENUE
HIGHLAND AVENUE
DORMAN ST.
BELLEFONTAINE ST.
FORT WAYNE AVENUE
EAST STREET
EAST ST.
MASSACHUSETTS AVE.
DAVIDSON ST.
PINE ST.
CRUSE ST.
ORIENTAL STREET
SOUTHEASTERN AVE.
I-65 NB
I-65 SB
I-70 WB
I-70 EB
I-65 SB/I-70 WB
I-65 NB/I-70 EB
NORTH SPLIT
UPGRADES
DRIVING PROGRESS
N
LOCAL DETOURS LEGEND
PROPOSED BRIDGE CONSTRUCTION
WESTBOUND/NORTHBOUND DETOUR ROUTE
EASTBOUND/SOUTHBOUND DETOUR ROUTE
MONON TRAIL DETOUR ROUTE
TRAFFIC FLOW
ROAD CLOSED
ALTERNATE CLOSURES OF LOCAL STREETS
STRUCTURE NUMBER
MARKET ST. CLOSURE
LOCAL DETOUR CONCEPT

VALLEY AVE. CLOSURE
LOCAL DETOUR CONCEPT

Attachment C4

Alt 3 Conceptual MOT Plan Phase 4

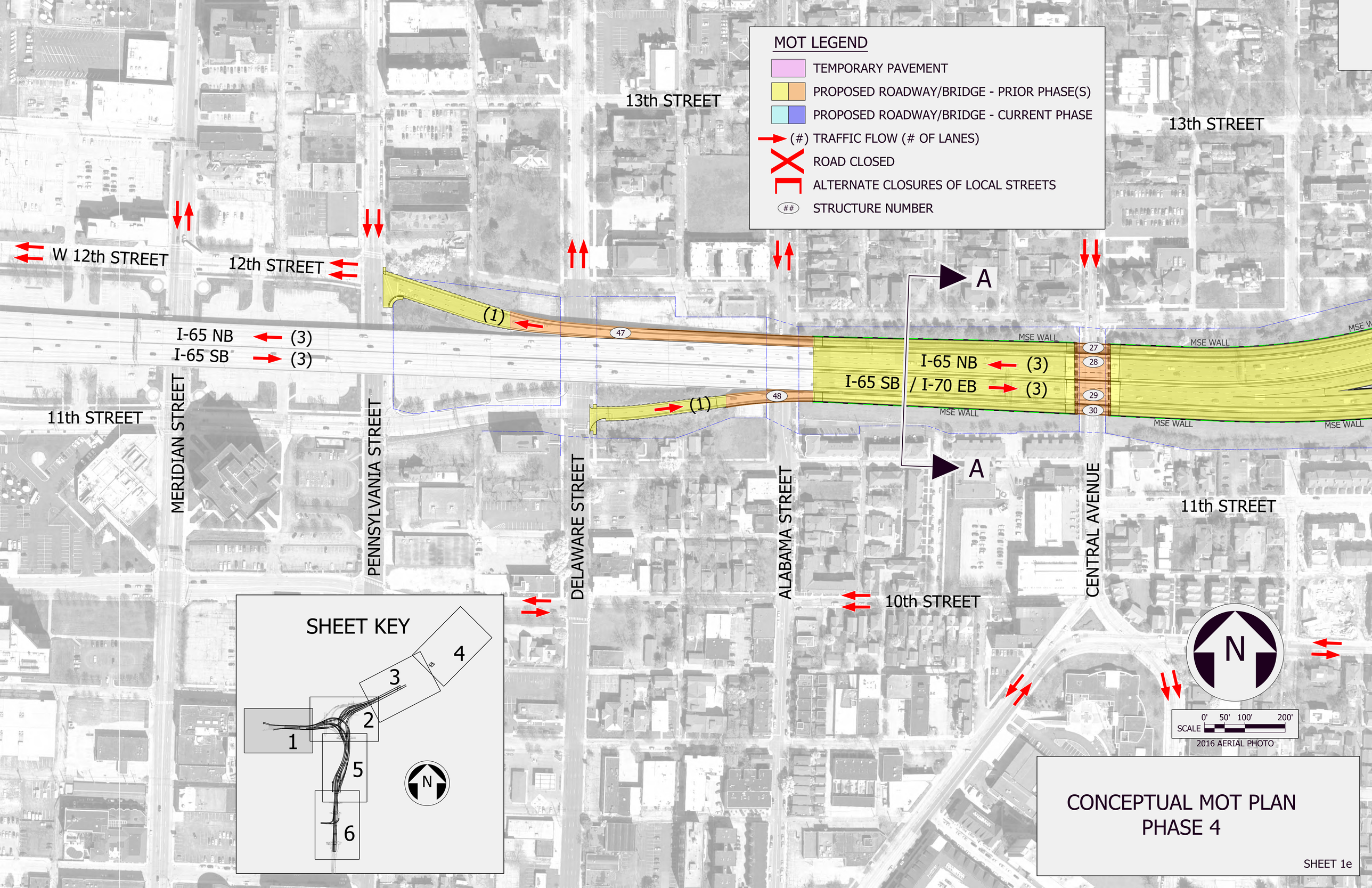
MOT LEGEND
TEMPORARY PAVEMENT
PROPOSED ROADWAY/BRIDGE - PRIOR PHASE(S)
PROPOSED ROADWAY/BRIDGE - CURRENT PHASE
(#) TRAFFIC FLOW (# OF LANES)
ROAD CLOSED
ALTERNATE CLOSURES OF LOCAL STREETS
STRUCTURE NUMBER
13th STREET
13th STREET
W 12th STREET
12th STREET
11th STREET
11th STREET
10th STREET
MERIDIAN STREET
PENNSYLVANIA STREET
DELAWARE STREET
ALABAMA STREET
CENTRAL AVENUE
I-65 NB (3)
I-65 SB (3)
(1)
(1)
47
48
I-65 NB (3)
I-65 SB / I-70 EB (3)
27
28
29
30
MSE WALL
MSE WALL
MSE WALL
MSE WALL
MSE WALL
A
A
SHEET KEY
1
2
3
4
5
6
N
N
0' 50' 100' 200'
SCALE
2016 AERIAL PHOTO
CONCEPTUAL MOT PLAN
PHASE 4
SHEET 1e

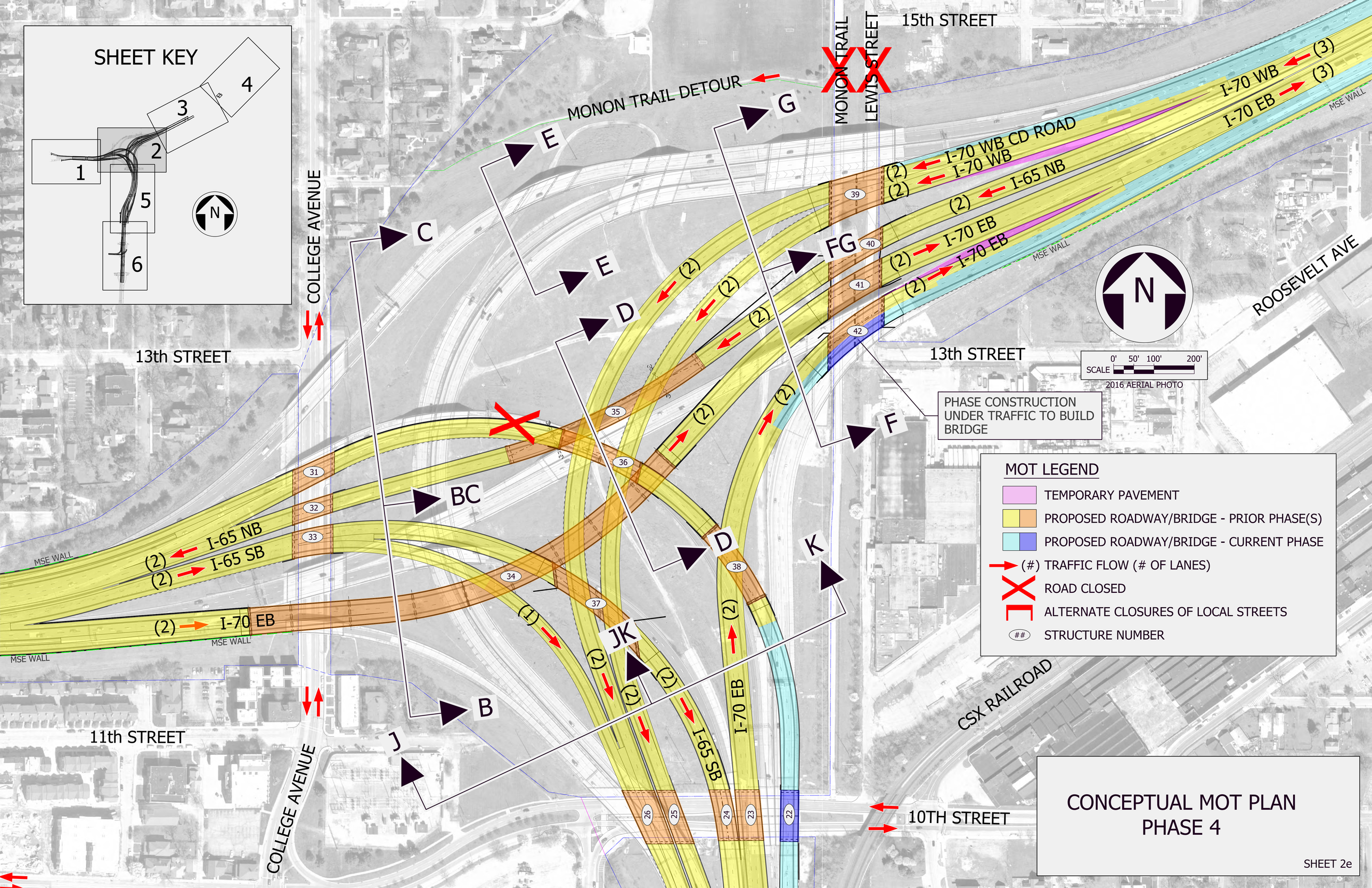
SHEET KEY
1
2
3
4
5
6
N
MONON TRAIL DETOUR
MONON TRAIL
LEWIS STREET
15th STREET
COLLEGE AVENUE
13th STREET
11th STREET
ROOSEVELT AVE
CSX RAILROAD
10TH STREET
I-70 WB
I-70 EB
I-70 WB CD ROAD
I-65 NB
I-65 SB
MSE WALL
A
B
C
D
E
F
G
J
K
BC
FG
JK
31
32
33
34
35
36
37
38
39
40
41
42
22
23
24
25
26
PHASE CONSTRUCTION UNDER TRAFFIC TO BUILD BRIDGE
SCALE 0' 50' 100' 200'
2016 AERIAL PHOTO
MOT LEGEND
TEMPORARY PAVEMENT
PROPOSED ROADWAY/BRIDGE - PRIOR PHASE(S)
PROPOSED ROADWAY/BRIDGE - CURRENT PHASE
(#) TRAFFIC FLOW (# OF LANES)
ROAD CLOSED
ALTERNATE CLOSURES OF LOCAL STREETS
STRUCTURE NUMBER
CONCEPTUAL MOT PLAN
PHASE 4
SHEET 2e

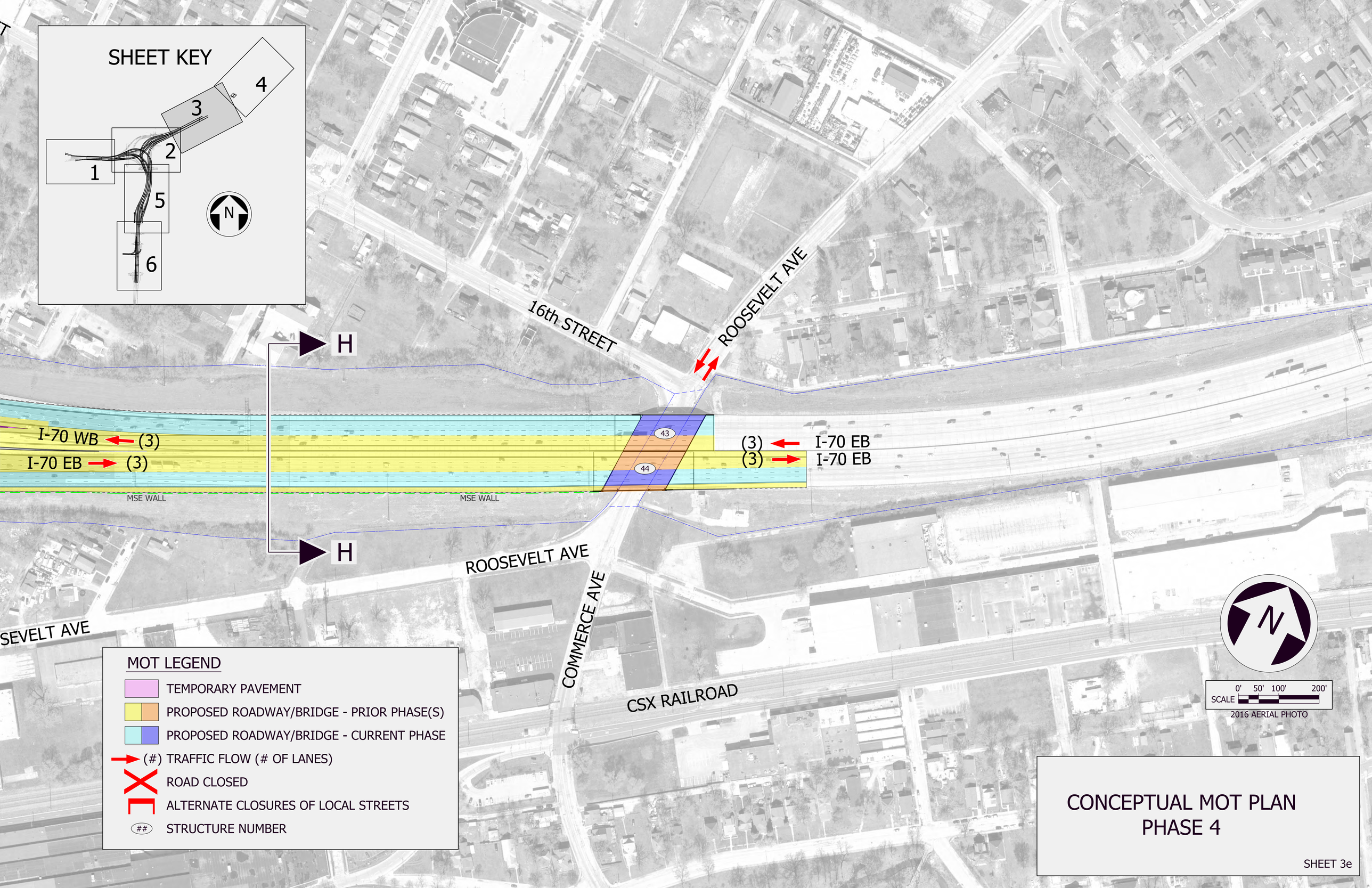
SHEET KEY
1
2
3
4
5
6
N
16th STREET
ROOSEVELT AVE
H
I-70 WB
(3)
I-70 EB
(3)
43
44
(3)
I-70 EB
(3)
I-70 EB
MSE WALL
MSE WALL
H
ROOSEVELT AVE
COMMERCE AVE
SEVELT AVE
CSX RAILROAD
N
0' 50' 100' 200'
SCALE
2016 AERIAL PHOTO
MOT LEGEND
TEMPORARY PAVEMENT
PROPOSED ROADWAY/BRIDGE - PRIOR PHASE(S)
PROPOSED ROADWAY/BRIDGE - CURRENT PHASE
(#) TRAFFIC FLOW (# OF LANES)
ROAD CLOSED
ALTERNATE CLOSURES OF LOCAL STREETS
STRUCTURE NUMBER
CONCEPTUAL MOT PLAN
PHASE 4
SHEET 3e

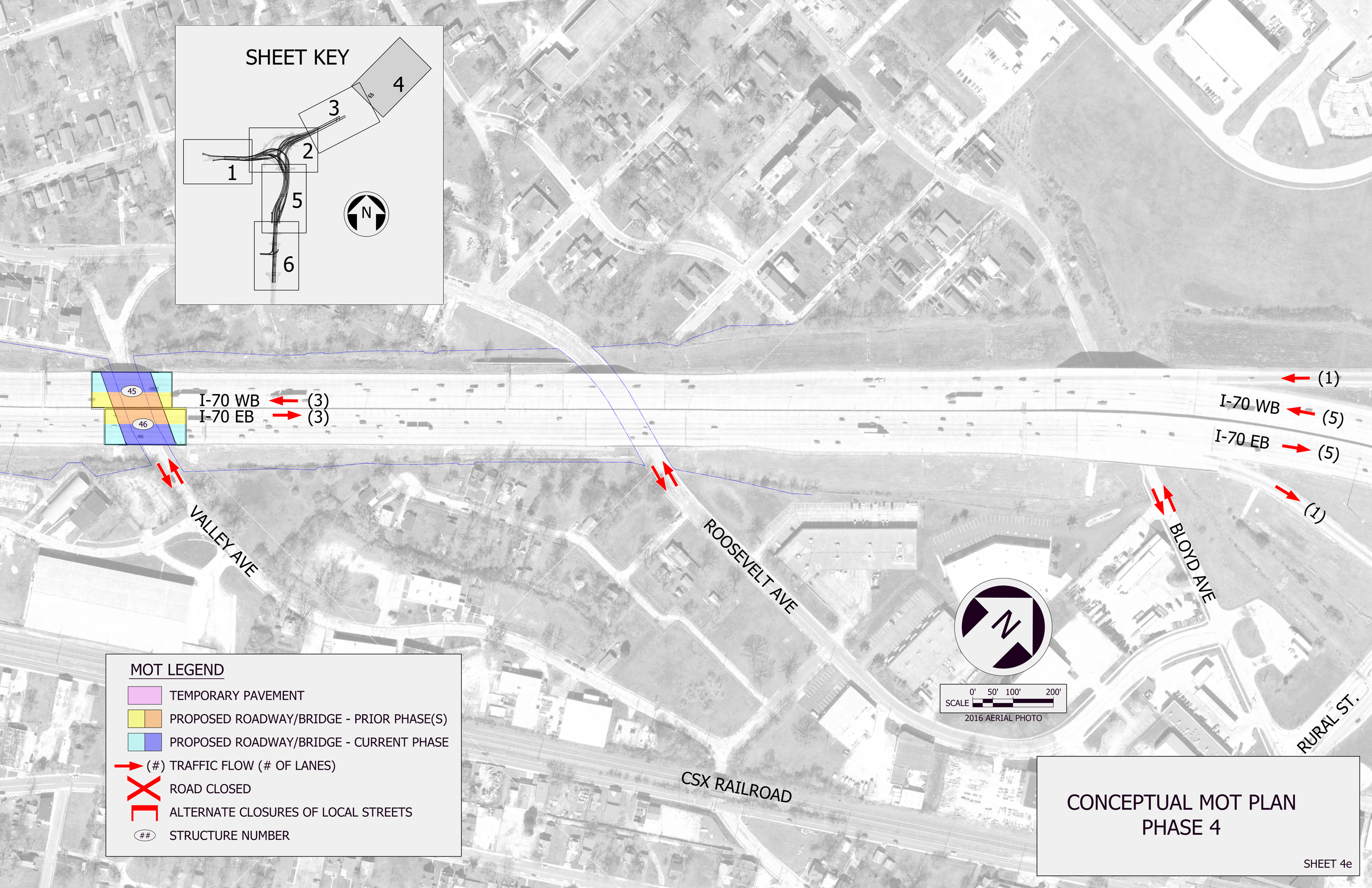
SHEET KEY
1
2
3
4
5
6
N
45
46
I-70 WB (3)
I-70 EB (3)
(1)
I-70 WB (5)
I-70 EB (5)
(1)
VALLEY AVE
ROOSEVELT AVE
BLOYD AVE
RURAL ST.
CSX RAILROAD
N
0' 50' 100' 200'
SCALE
2016 AERIAL PHOTO
MOT LEGEND
TEMPORARY PAVEMENT
PROPOSED ROADWAY/BRIDGE - PRIOR PHASE(S)
PROPOSED ROADWAY/BRIDGE - CURRENT PHASE
(#) TRAFFIC FLOW (# OF LANES)
ROAD CLOSED
ALTERNATE CLOSURES OF LOCAL STREETS
STRUCTURE NUMBER
CONCEPTUAL MOT PLAN
PHASE 4
SHEET 4e

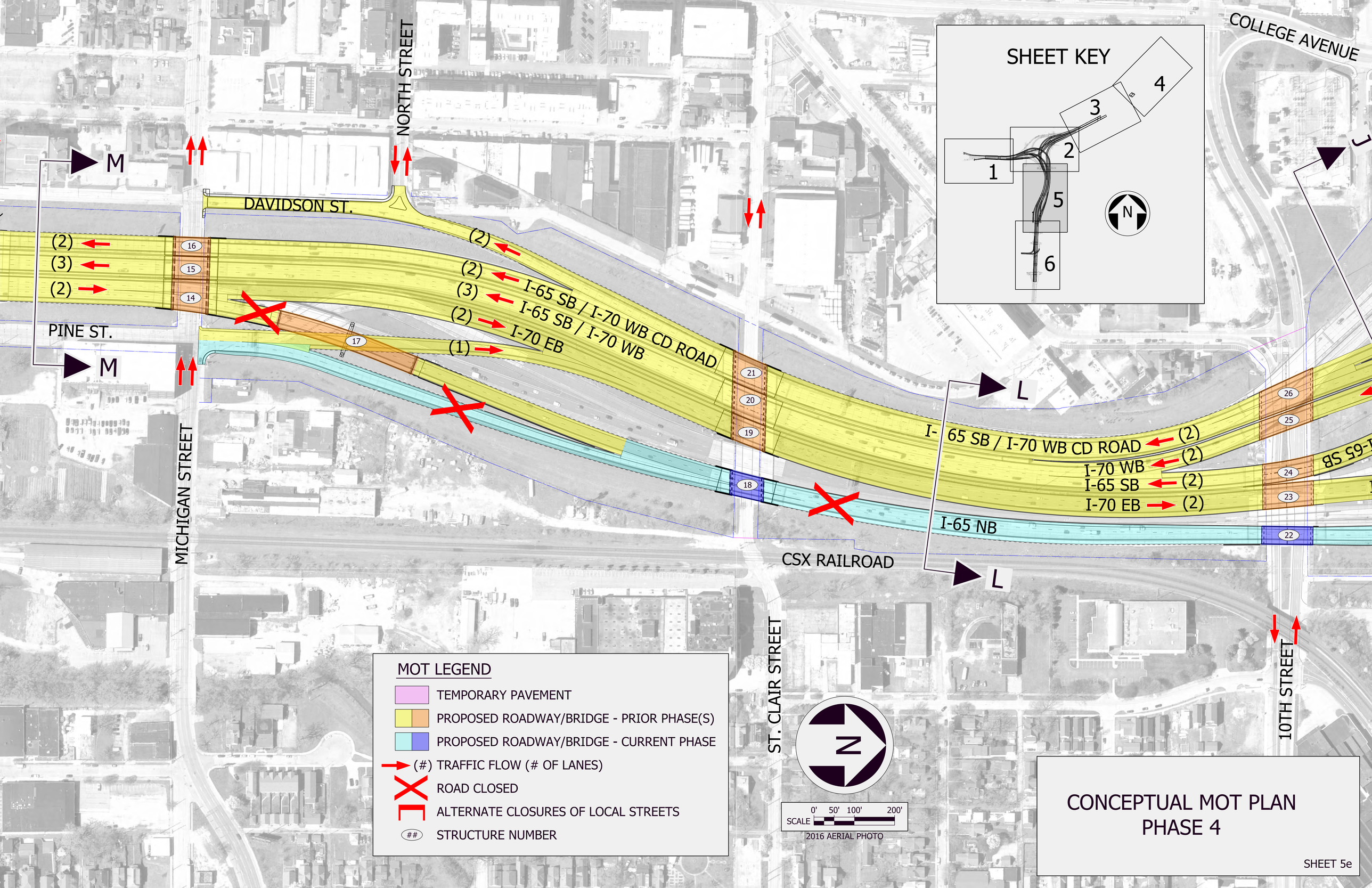
SHEET KEY
1
2
3
4
5
6
N
NORTH STREET
DAVIDSON ST.
PINE ST.
MICHIGAN STREET
COLLEGE AVENUE
ST. CLAIR STREET
10TH STREET
CSX RAILROAD
M
M
L
L
J
(2)
(3)
(2)
16
15
14
17
(2)
(2)
I-65 SB / I-70 WB CD ROAD
(3)
I-65 SB / I-70 WB
(2)
I-70 EB
(1)
21
20
19
18
I- 65 SB / I-70 WB CD ROAD
(2)
I-70 WB
(2)
I-65 SB
(2)
I-70 EB
(2)
I-65 NB
26
25
24
23
22
I-65 SB
MOT LEGEND
TEMPORARY PAVEMENT
PROPOSED ROADWAY/BRIDGE - PRIOR PHASE(S)
PROPOSED ROADWAY/BRIDGE - CURRENT PHASE
(#) TRAFFIC FLOW (# OF LANES)
ROAD CLOSED
ALTERNATE CLOSURES OF LOCAL STREETS
STRUCTURE NUMBER
N
0' 50' 100' 200'
SCALE
2016 AERIAL PHOTO
CONCEPTUAL MOT PLAN
PHASE 4
SHEET 5e

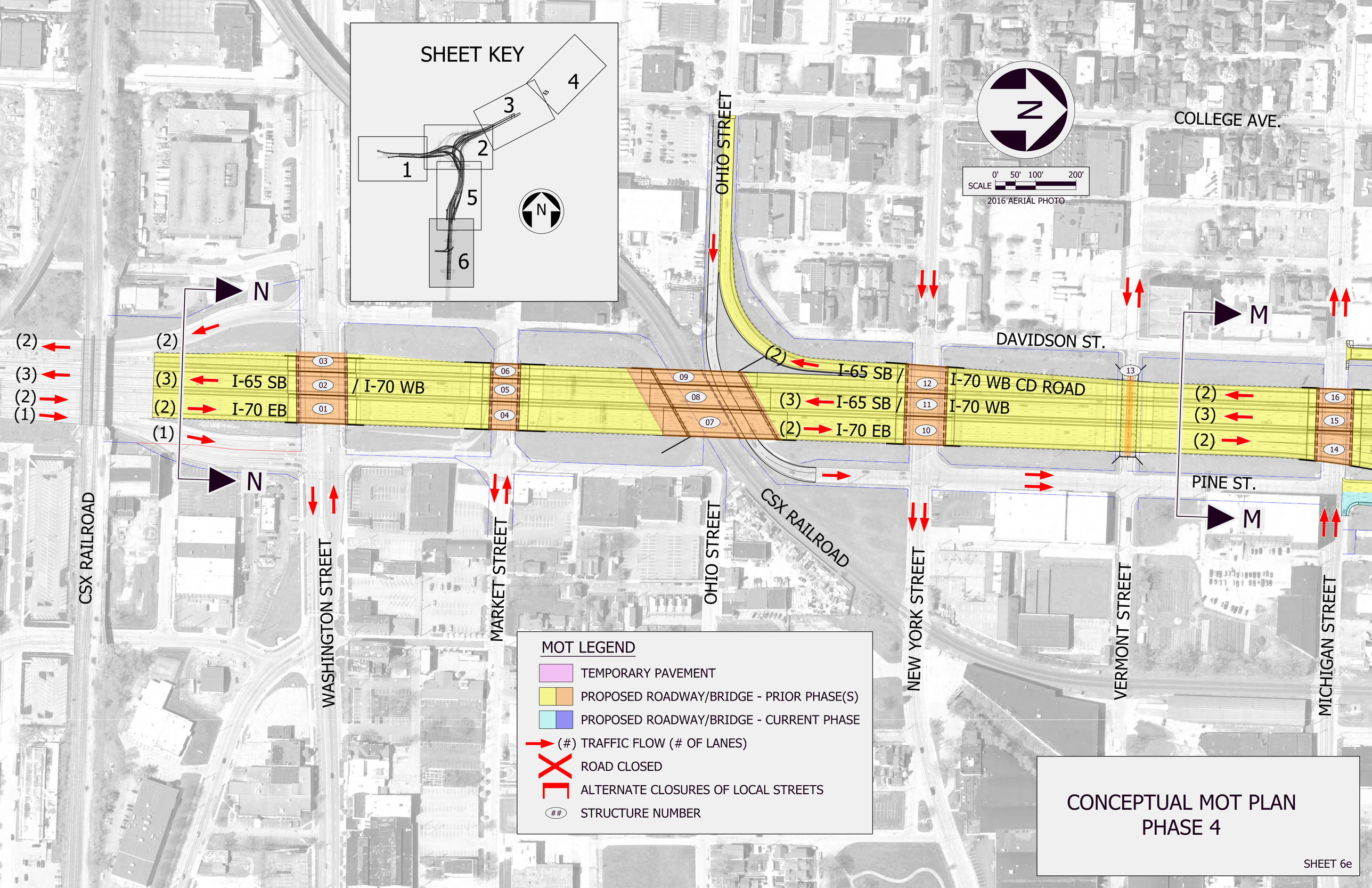
SHEET KEY
1
2
3
4
5
6
N
N
SCALE 0' 50' 100' 200'
2016 AERIAL PHOTO
COLLEGE AVE.
OHIO STREET
DAVIDSON ST.
PINE ST.
N
N
M
M
(2)
(3)
(2)
(1)
(2)
(3)
(2)
(1)
I-65 SB
/ I-70 WB
I-70 EB
03
02
01
06
05
04
09
08
07
(2)
I-65 SB /
(3)
I-65 SB /
(2)
I-70 EB
12
11
10
I-70 WB CD ROAD
I-70 WB
13
(2)
(3)
(2)
16
15
14
CSX RAILROAD
WASHINGTON STREET
MARKET STREET
OHIO STREET
CSX RAILROAD
NEW YORK STREET
VERMONT STREET
MICHIGAN STREET
MOT LEGEND
TEMPORARY PAVEMENT
PROPOSED ROADWAY/BRIDGE - PRIOR PHASE(S)
PROPOSED ROADWAY/BRIDGE - CURRENT PHASE
(#) TRAFFIC FLOW (# OF LANES)
ROAD CLOSED
ALTERNATE CLOSURES OF LOCAL STREETS
STRUCTURE NUMBER
CONCEPTUAL MOT PLAN
PHASE 4
SHEET 6e

Attachment E

Interstate Closure Signage Maps

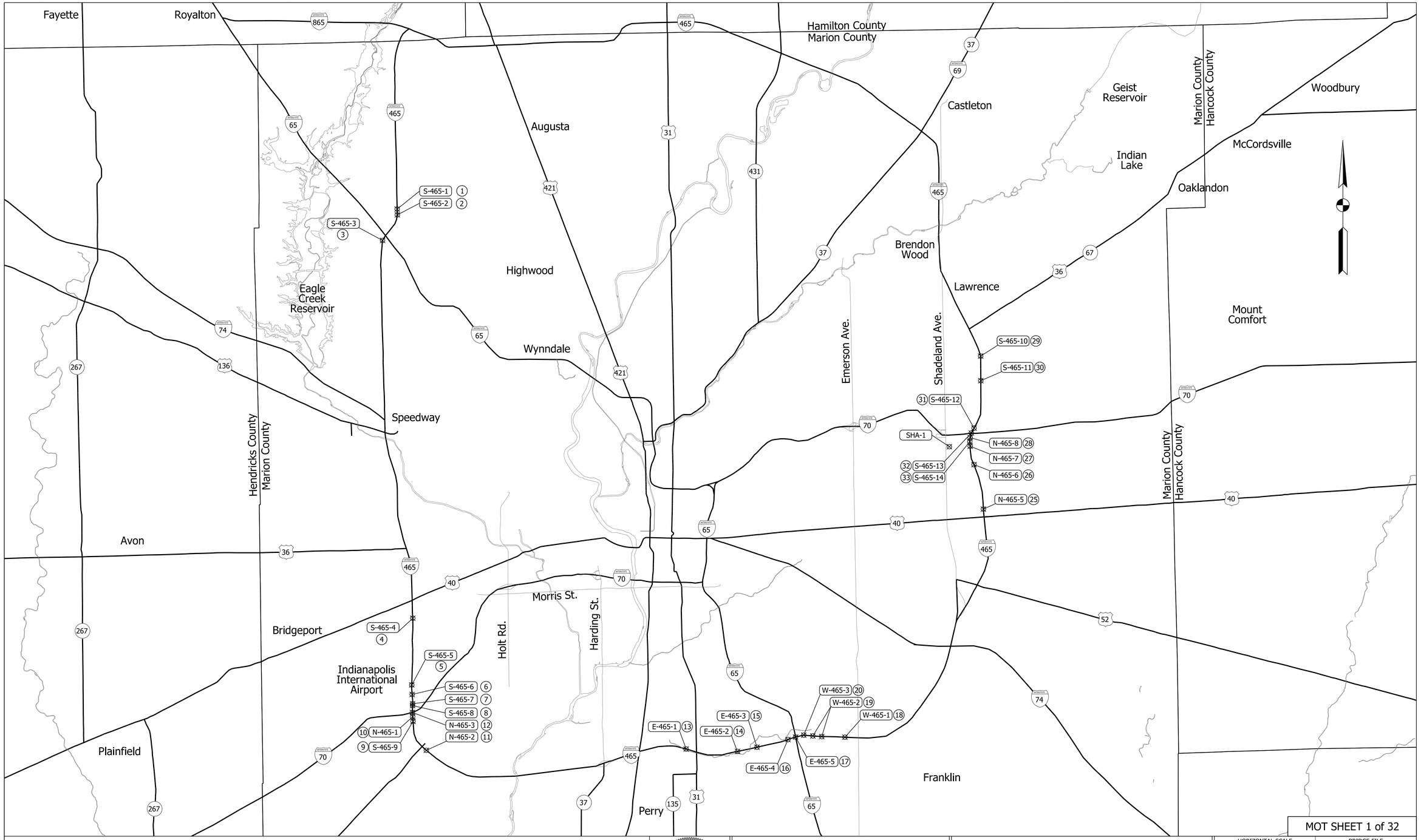

Signs 1 to 20, 25 to 33

SHAM N. MALU REGISTERED No. PE10910561 STATE OF INDIANA PROFESSIONAL ENGINEER

RECOMMENDED FOR APPROVAL — DESIGN ENGINEER — 6/5/2013 DATE

DESIGNED: SNM DRAWN: SJC

CHECKED: JTL CHECKED: JTL

INDIANA
DEPARTMENT OF TRANSPORTATION

MAINTENANCE OF TRAFFIC
EXISTING SIGN MODIFICATIONS
I-465

MOT SHEET 1 of 32

HORIZONTAL SCALE	BRIDGE FILE
N/A	
VERTICAL SCALE	DESIGNATION
N/A	1382490
SURVEY BOOK	SHEETS
	11 of 185
CONTRACT	PROJECT
R-35730	1382490

IP_PWP:dms02094\Sht MOT_01.dgn
04-JUN-2013

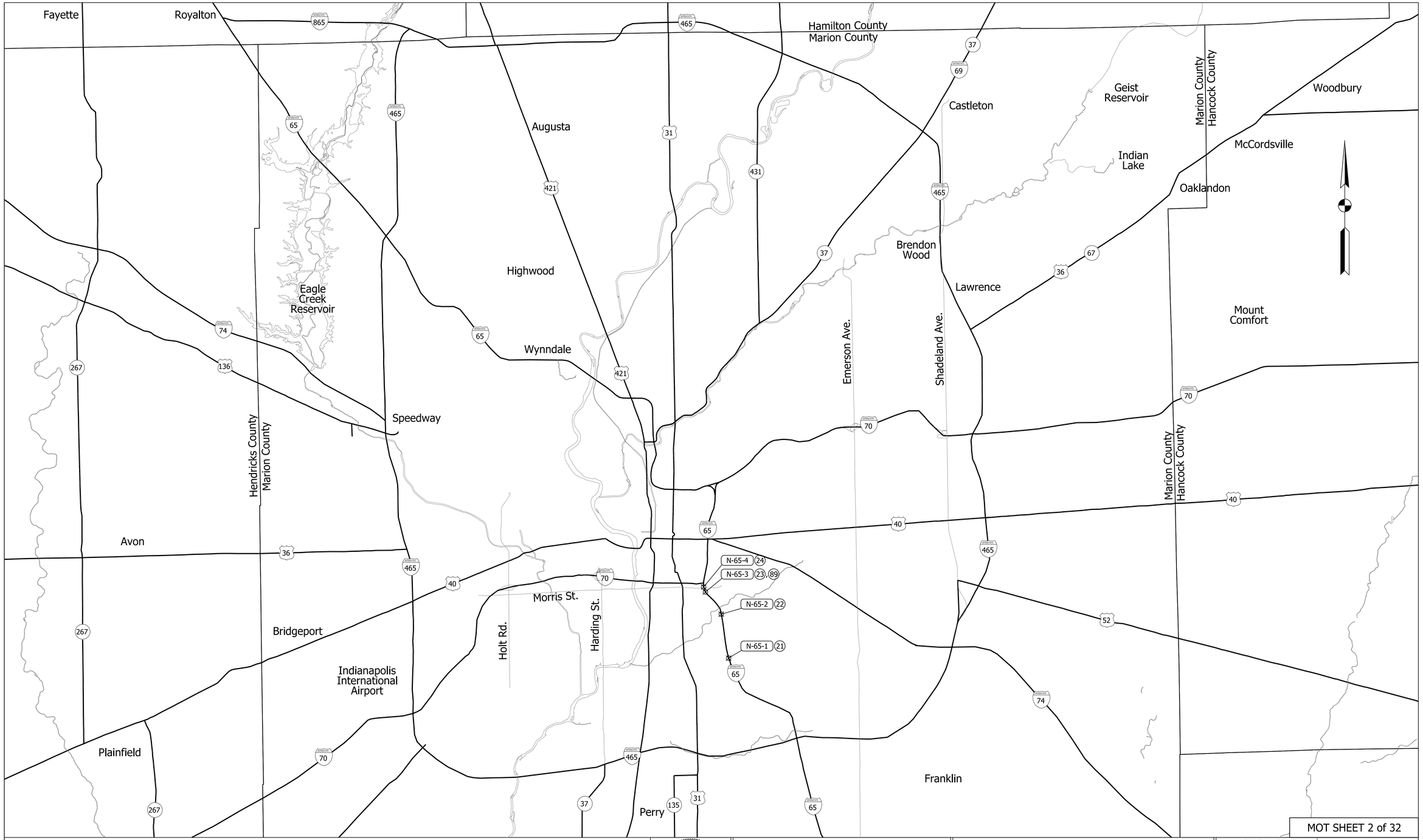

MOT SHEET 2 of 32

Signs 21 to 24, 89

SHAM N. MALU
REGISTERED
No. PE10910561
STATE OF INDIANA
PROFESSIONAL ENGINEER

RECOMMENDED FOR APPROVAL — DESIGN ENGINEER — 6/5/2013 DATE

DESIGNED: SNM | DRAWN: SJC
CHECKED: JTL | CHECKED: JTL

INDIANA
DEPARTMENT OF TRANSPORTATION

MAINTENANCE OF TRAFFIC
EXISTING SIGN MODIFICATIONS
I-65 NORTH

HORIZONTAL SCALE	BRIDGE FILE
N/A	
VERTICAL SCALE	DESIGNATION
N/A	1382490
SURVEY BOOK	SHEETS
	12 of 185
CONTRACT	PROJECT
R-35730	1382490

IP_PWP:dms02094\Sht MOT_02.dgn
04-JUN-2013

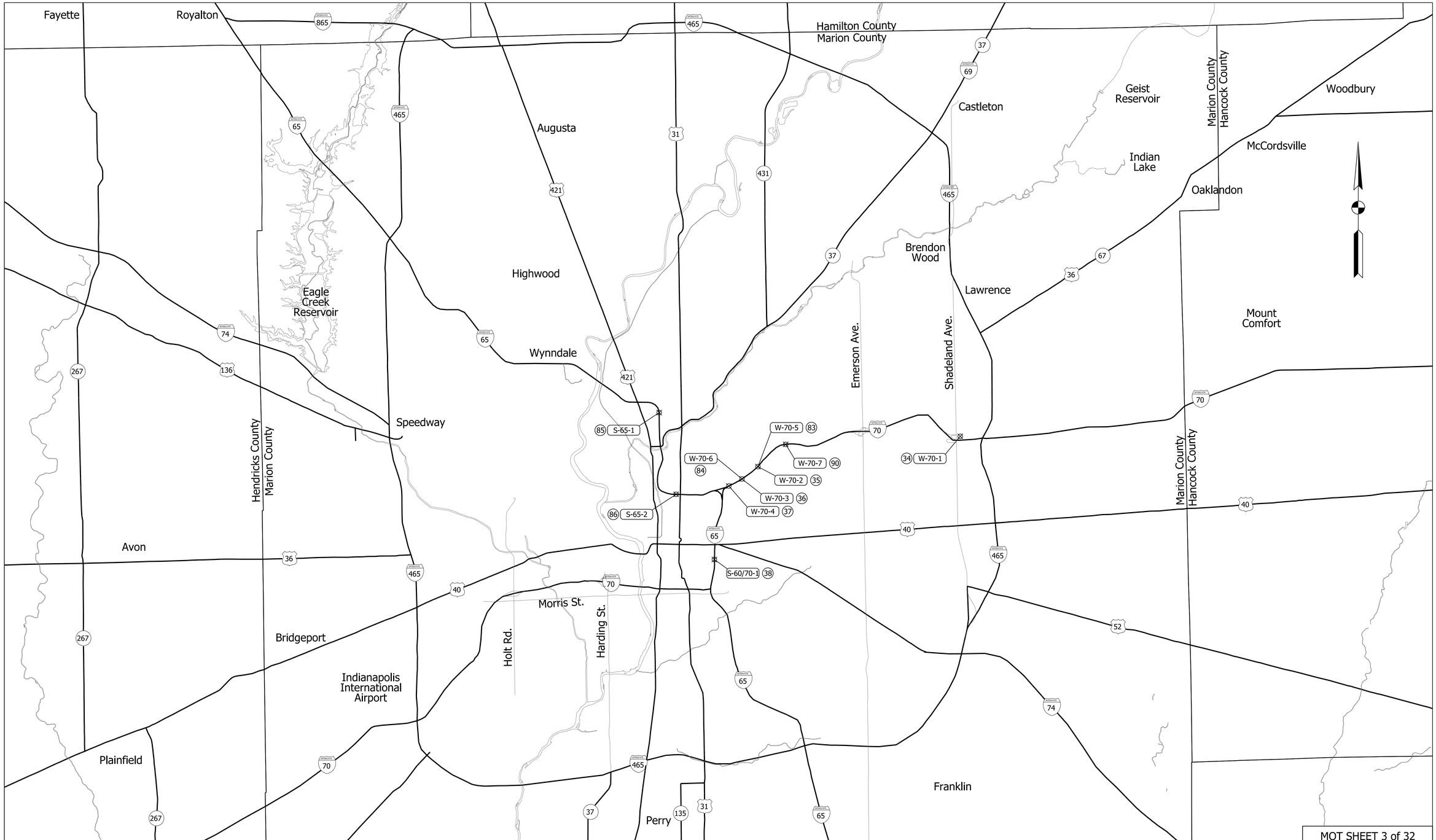

MOT SHEET 3 of 32

Signs 34 to 38, 83 to 86

SHAM N. MALU REGISTERED No. PE10910561 STATE OF INDIANA PROFESSIONAL ENGINEER

RECOMMENDED FOR APPROVAL — DESIGN ENGINEER — DATE 6/5/2013

DESIGNED: SNM | DRAWN: SJC

CHECKED: JTL | CHECKED: JTL

INDIANA
DEPARTMENT OF TRANSPORTATION

MAINTENANCE OF TRAFFIC
EXISTING SIGN MODIFICATIONS
I-70 WESTBOUND, I-65 SOUTH

HORIZONTAL SCALE	BRIDGE FILE
N/A	
VERTICAL SCALE	DESIGNATION
N/A	1382490
SURVEY BOOK	SHEETS
	13 of 185
CONTRACT	PROJECT
R-35730	1382490

IP_PWP:dms02094\Sht MOT_03.dgn
04-JUN-2013

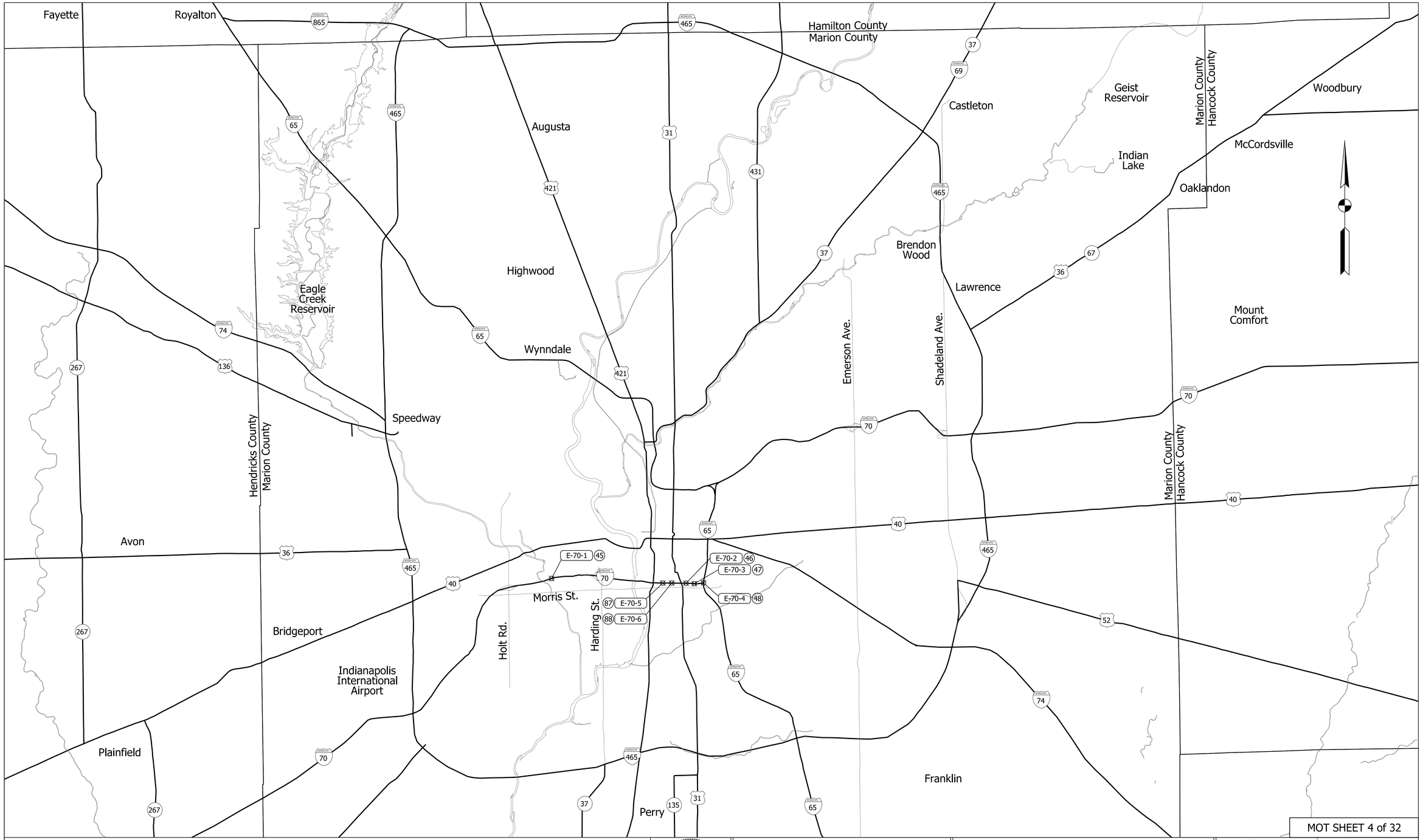

MOT SHEET 4 of 32

Signs 45 to 48, 87, 88

SHAM N. MALU REGISTERED No. PE10910561 STATE OF INDIANA PROFESSIONAL ENGINEER

RECOMMENDED FOR APPROVAL — DESIGN ENGINEER — 6/5/2013 DATE

DESIGNED: SNM DRAWN: SJC

CHECKED: JTL CHECKED: JTL

INDIANA
DEPARTMENT OF TRANSPORTATION

MAINTENANCE OF TRAFFIC
EXISTING SIGN MODIFICATIONS
I-70 EASTBOUND

HORIZONTAL SCALE	BRIDGE FILE
N/A	
VERTICAL SCALE	DESIGNATION
N/A	1382490
SURVEY BOOK	SHEETS
	14 of 185
CONTRACT	PROJECT
R-35730	1382490

IP_PWP:dms02094\Sht MOT_04.dgn
04-JUN-2013

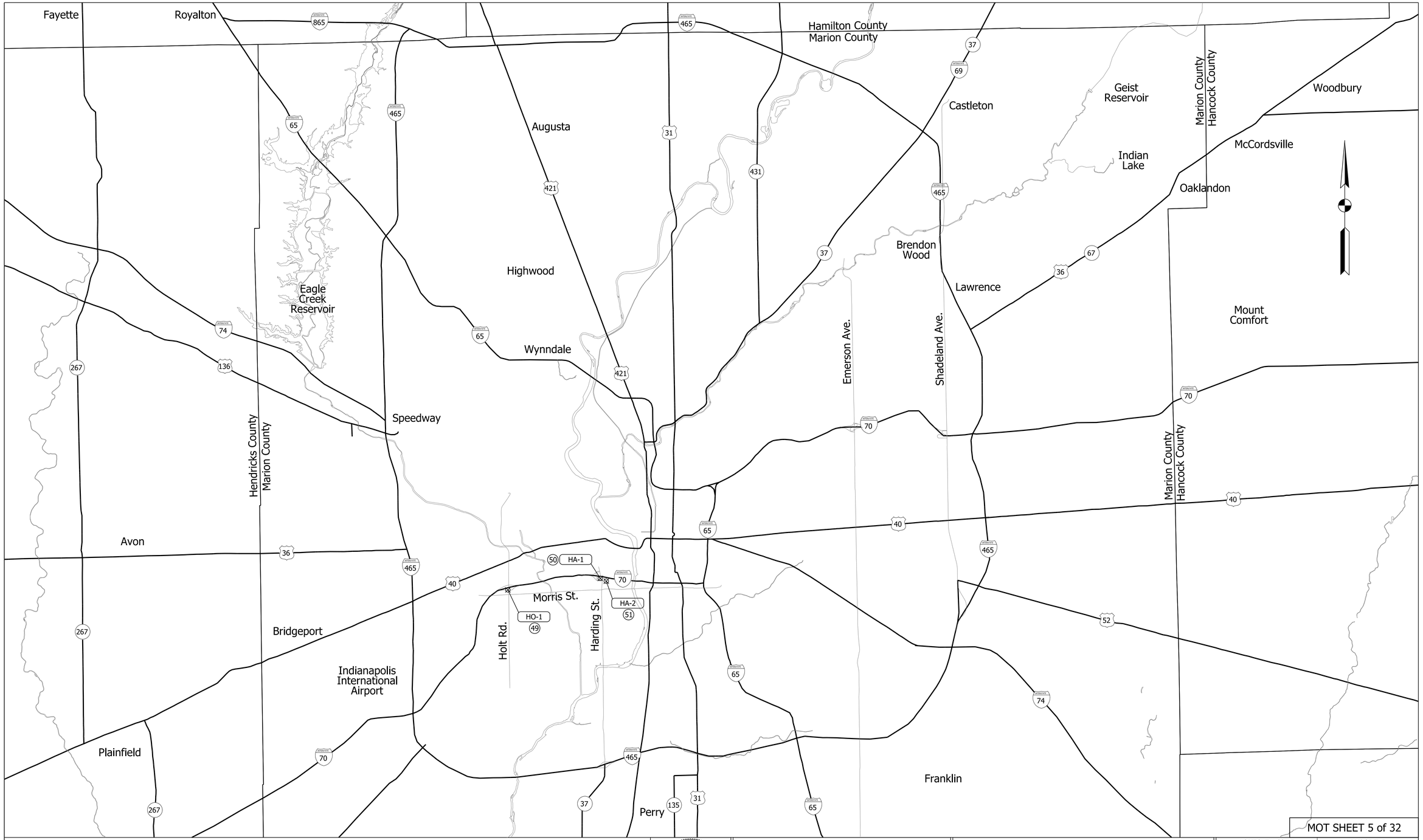

MOT SHEET 5 of 32

Signs 49 to 51

SHAM N. MALU
REGISTERED
No. PE10910561
STATE OF INDIANA
PROFESSIONAL ENGINEER

RECOMMENDED FOR APPROVAL — DESIGN ENGINEER — 6/5/2013 DATE

DESIGNED: SNM | DRAWN: SJC
CHECKED: JTL | CHECKED: JTL

INDIANA
DEPARTMENT OF TRANSPORTATION

MAINTENANCE OF TRAFFIC
EXISTING SIGN MODIFICATIONS
HOLT, HARDING AND MORRIS

HORIZONTAL SCALE	BRIDGE FILE
N/A	
VERTICAL SCALE	DESIGNATION
N/A	1382490
SURVEY BOOK	SHEETS
	15 of 185
CONTRACT	PROJECT
R-35730	1382490

IP_PWP:dms02094\Sht MOT_05.dgn
04-JUN-2013

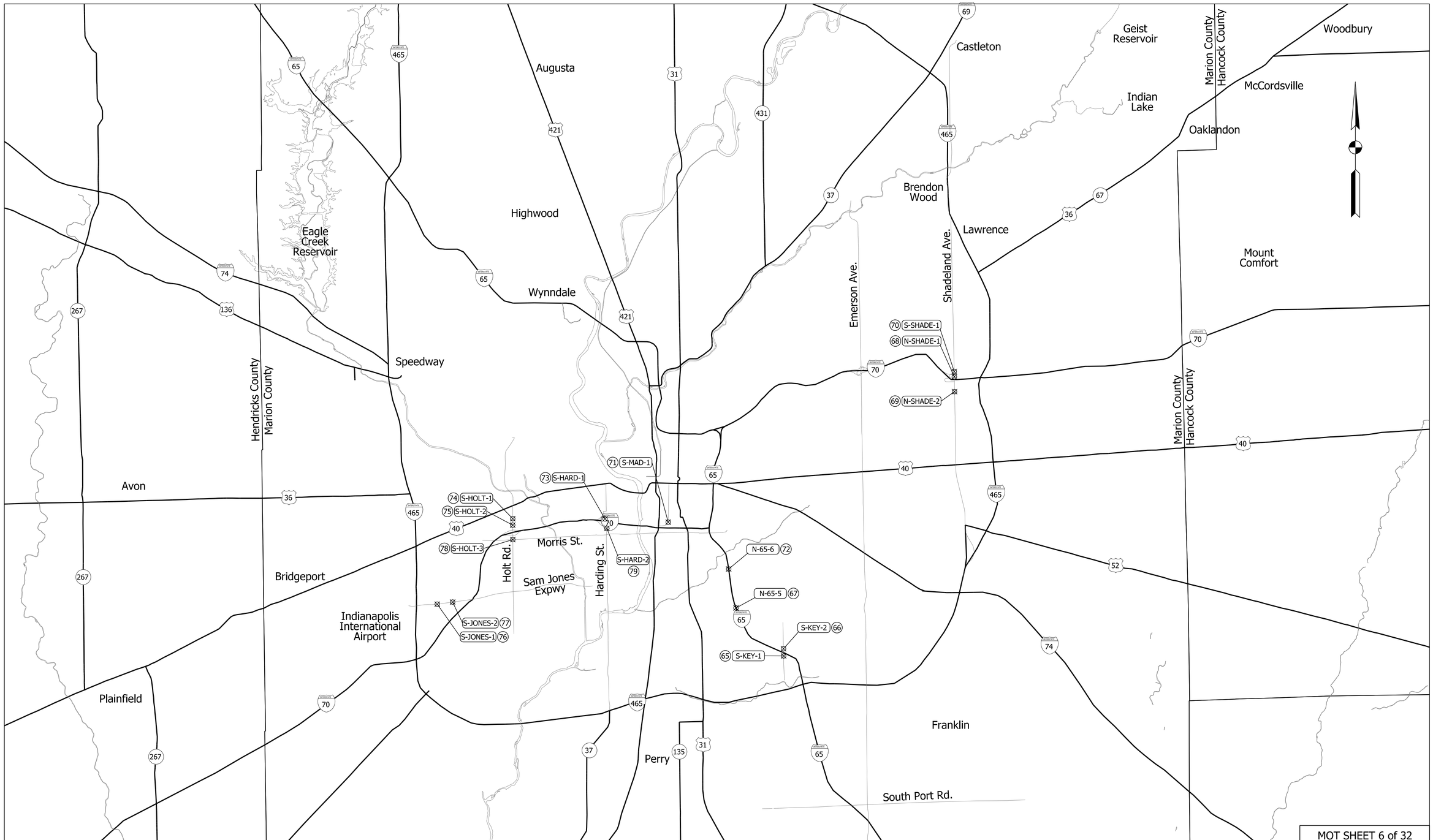

MOT SHEET 6 of 32

Signs 65 to 79

SHAM N. MALU REGISTERED No. PE10910561 STATE OF INDIANA PROFESSIONAL ENGINEER

RECOMMENDED FOR APPROVAL — DESIGN ENGINEER — 6/5/2013 DATE

DESIGNED: SNM | DRAWN: SJC

CHECKED: JTL | CHECKED: JTL

INDIANA
DEPARTMENT OF TRANSPORTATION

MAINTENANCE OF TRAFFIC
EXISTING SIGN MODIFICATIONS
MISCELLANEOUS LOCATIONS

HORIZONTAL SCALE	BRIDGE FILE
N/A	
VERTICAL SCALE	DESIGNATION
N/A	1382490
SURVEY BOOK	SHEETS
	16 of 185
CONTRACT	PROJECT
R-35730	1382490

IP_PWP:dms02094\Sht MOT_11B.dgn
04-JUN-2013

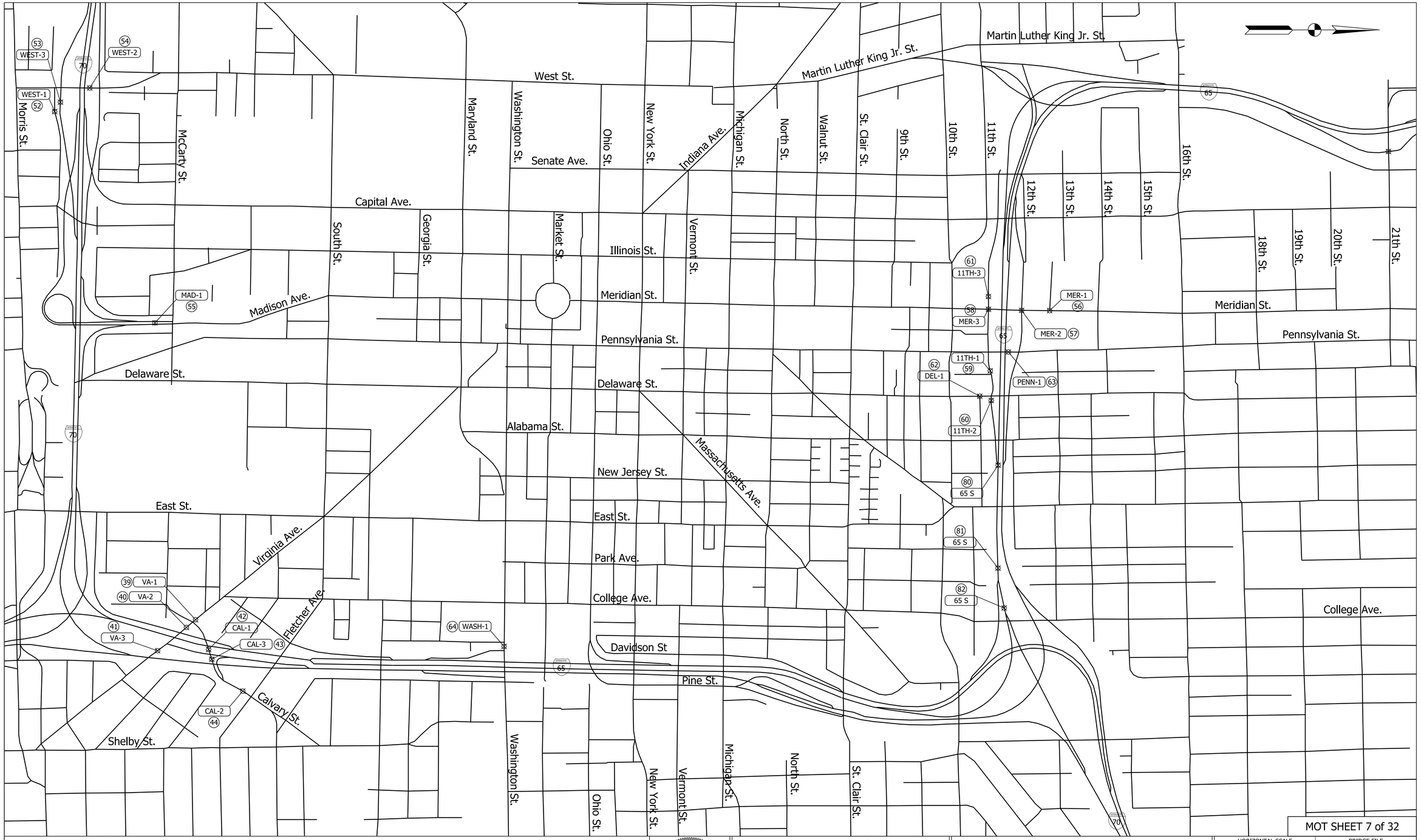

MOT SHEET 7 of 32

Signs 39 to 43, 52 to 64, 80 to 82

SHAM N. MALU REGISTERED No. PE10910561 STATE OF INDIANA PROFESSIONAL ENGINEER

RECOMMENDED FOR APPROVAL	Sham Malu 6/5/2013 DESIGN ENGINEER DATE	INDIANA DEPARTMENT OF TRANSPORTATION	HORIZONTAL SCALE: N/A; BRIDGE FILE:
			VERTICAL SCALE: N/A; DESIGNATION: 1382490
DESIGNED: SNM	DRAWN: SJC	MAINTENANCE OF TRAFFIC EXISTING SIGN MODIFICATIONS DOWNTOWN AREA	SURVEY BOOK: ; SHEETS: 17 of 185
CHECKED: JTL	CHECKED: JTL		CONTRACT: R-35730; PROJECT: 1382490

IP_PWP:dms02094\Sht MOT_06.dgn
04-JUN-2013

S-465-1
1
Add "Downtown Only"
Approx. 21 Mile Marker

S-465-2
2
Add "Downtown Only"
Approx. 20 Mile Marker

S-465-3
3
Add "Downtown Only"
Approx. 20 Mile Marker

S-465-4
4
Add "Downtown Only"
Approx. 12 Mile Marker

S-465-5
5
Add "Downtown Only"
Approx. 11 Mile Marker

S-465-6
6
Add "Downtown Only"
Approx. 10 Mile Marker

S-465-7
7
Add "Downtown Only"
Approx. 10 Mile Marker

S-465-8
8
Add "Downtown Only"
Approx. 10 Mile Marker

S-465-9
9
Add "Downtown Only"
Approx. 10 Mile Marker

N-465-1
10
Add "Downtown Only"
Approx. 9 Mile Marker

N-465-2
11
Add "Downtown Only"
Approx. 9 Mile Marker on 465 N

N-465-3
12
Add "Downtown Only"
Off Ramp on 465 N

MOT SHEET 8 of 32

Signs 1 to 12

SHAM N. MALU REGISTERED No. PE10910561 STATE OF INDIANA PROFESSIONAL ENGINEER

RECOMMENDED FOR APPROVAL — DESIGN ENGINEER — 6/5/2013 DATE

DESIGNED: SNM DRAWN: SJC
CHECKED: JTL CHECKED: JTL

INDIANA
DEPARTMENT OF TRANSPORTATION

MAINTENANCE OF TRAFFIC
EXISTING SIGNS

HORIZONTAL SCALE	BRIDGE FILE
N/A	
VERTICAL SCALE	DESIGNATION
N/A	1382490
SURVEY BOOK	SHEETS
	18 of 185
CONTRACT	PROJECT
R-35730	1382490

IP_PWP:dms02094\Sht MOT_12.dgn
04-JUN-2013

E-465-1
(13)
Add "Downtown Only"
Approx. 2 Mile Marker

E-465-2
(14)
Add "Downtown Only"
Approx. 1 Mile Marker

E-465-3
(15)
Add "Downtown Only"
Approx. 1 Mile Marker

E-465-4
(16)
Add "Downtown Only"
Approx. 0 Mile Marker

E-465-5
(17)
Add "Downtown Only"
Approx. 0 Mile Marker

W-465-1
(18)
Add "Downtown Only"
Approx. 52 Mile Marker

W-465-2
(19)
Add "Downtown Only"
Approx. 53 Mile Marker

W-465-3
(20)
Add "Downtown Only"
Approx. 53 Mile Marker

N-65-1
(21)
Add "Closed"
Approx. 109 Mile Marker

N-65-2
(22)
Add "Closed"
Approx. 109 Mile Marker

N-65-3
(23)
Add "Closed"
Approx. 110 Mile Marker

N-65-4
(24)
Add "Closed"
Approx. 110 Mile Marker

N-465-5
(25)
Add "Downtown Only"
Approx. 45 Mile Marker

N-465-6
(26)
Add "Downtown Only"
Approx. 45 Mile Marker

N-465-7
(27)
Add "Downtown Only"
Approx. 44 Mile Marker

N-465-8
(28)
Add "Downtown Only"
Approx. 44 Mile Marker

MOT SHEET 9 of 32

Signs (13) to (28)

SHAM N. MALU
REGISTERED
No. PE10910561
STATE OF INDIANA
PROFESSIONAL ENGINEER

RECOMMENDED FOR APPROVAL — DESIGN ENGINEER — DATE 6/5/2013

DESIGNED: SNM | DRAWN: SJC
CHECKED: JTL | CHECKED: JTL

INDIANA
DEPARTMENT OF TRANSPORTATION

MAINTENANCE OF TRAFFIC
EXISTING SIGNS

HORIZONTAL SCALE	BRIDGE FILE
N/A	
VERTICAL SCALE	DESIGNATION
N/A	1382490
SURVEY BOOK	SHEETS
	19 of 185
CONTRACT	PROJECT
R-35730	1382490

IP_PWP:dms02094\Sht MOT_13.dgn
04-JUN-2013

S -465-10

29

Add "Downtown Only"

S -465-11

30

Add "Downtown Only"

S -465-12

31

Add "Downtown Only"

S -465-13

32

Add "Downtown Only"

S -465-14

33

Add "Downtown Only"

W -70-1

34

Add "Downtown Only"
Approx. 89 Mile Marker

W -70-2

35

Add "Closed"
Approx. 84 Mile Marker

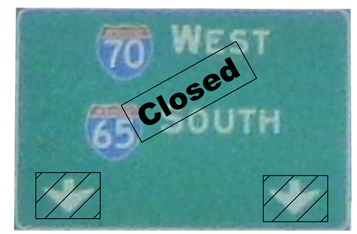

W -70-3

36

Add "Closed"
Approx. 84 Mile Marker

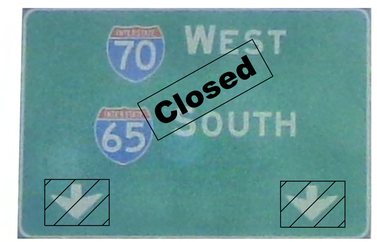

W -70-4

37

Add "Closed"
Approx. 84 Mile Marker

S-65/70_1

38

Add "Closed"
Approx. 11 Mile Marker

VA-1

39

Cover Signs
Before Intersection of
Virginia Ave. & Calvary St.

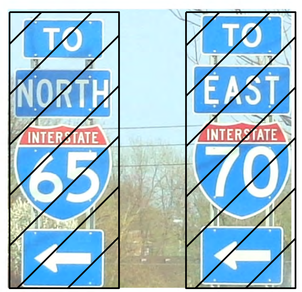

VA-2

40

Cover Signs
Corner of
Virginia Ave. & Calvary St.

VA-3

41

Add "Closed"
Approx. Intersection of
Virginia Ave. & Calvary St.

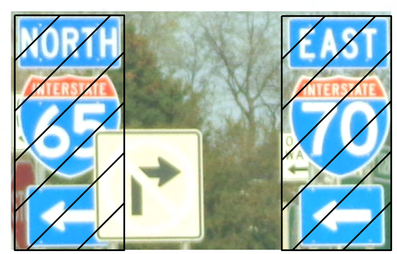

CAL-1

42

Cover Signs
Approx. Intersection of
Virginia Ave. & Calvary St.

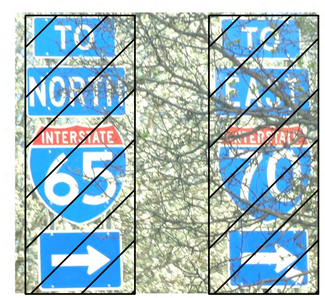

CAL-2

43

Cover Signs
Approx. Intersection of
Virginia Ave. & Calvary St.

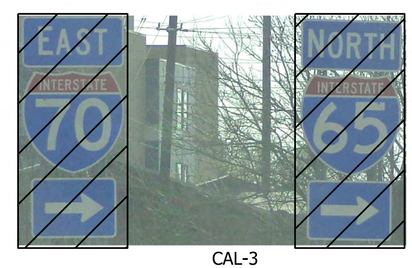

CAL-3

44

Cover Signs

MOT SHEET 10 of 32

Signs 29 to 44

SHAM N. MALU
REGISTERED
No. PE10910561
STATE OF INDIANA
PROFESSIONAL ENGINEER

RECOMMENDED FOR APPROVAL	Sham Malu — DESIGN ENGINEER	6/5/2013 DATE	
DESIGNED: SNM	DRAWN: SJC		
CHECKED: JTL	CHECKED: JTL		

INDIANA
DEPARTMENT OF TRANSPORTATION

MAINTENANCE OF TRAFFIC
EXISTING SIGNS

HORIZONTAL SCALE	BRIDGE FILE
N/A	
VERTICAL SCALE	DESIGNATION
N/A	1382490
SURVEY BOOK	SHEETS
	20 of 185
CONTRACT	PROJECT
R-35730	1382490

IP_PWP:dms02094\Sht MOT_14.dgn
04-JUN-2013

E-70-1
45
Add "South"
77.4 Mile Marker

E-70-3
47
Add "Closed"
80.4 Mile Marker

HO-1
49
Add "Downtown Only"
Intersection of Holt Rd. & E. I-70 Exit

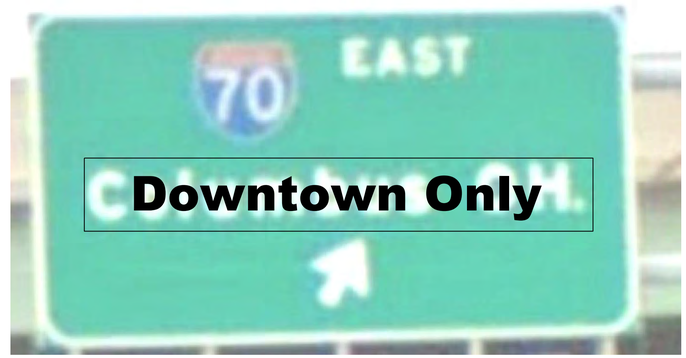

HA-1
50
Add "Downtown Only"
Harding St. & E. I-70

E-70-2
46
Add "Closed"
79.8 Mile Marker

E-70-4
48
Add "Closed"
80.6 Mile marker

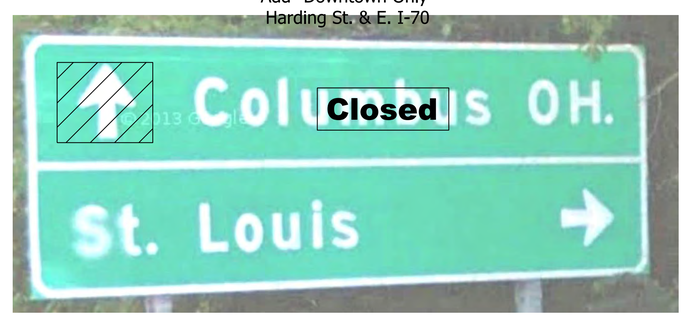

HA-2
51
Add "Closed"
Intersection of Harding St. & Oliver Rd.

MOT SHEET 11 of 32

Signs 45 to 51

SHAM N. MALU REGISTERED No. PE10910561 STATE OF INDIANA PROFESSIONAL ENGINEER

RECOMMENDED FOR APPROVAL — DESIGN ENGINEER — 6/5/2013 DATE

DESIGNED: SNM DRAWN: SJC
CHECKED: JTL CHECKED: JTL

INDIANA
DEPARTMENT OF TRANSPORTATION

MAINTENANCE OF TRAFFIC
EXISTING SIGNS

HORIZONTAL SCALE	BRIDGE FILE
N/A	
VERTICAL SCALE	DESIGNATION
N/A	1382490
SURVEY BOOK	SHEETS
	21 of 185
CONTRACT	PROJECT
R-35730	1382490

IP_PWP:dms02094\Sht MOT_16.dgn
10-JUN-2013

WEST-1

52

Add "Downtown Only" and "South"
Approx. Intersection of S. West St. & Morris St.

WEST-2

53

Add "Downtown Only" and "South"
S. West St. Approx. to I-70

WEST-3

54

Add "Downtown Only" and "South"
S. West St. Approx. to I-70

MAD-1

55

Add "Closed", Add "South"
Approx. Intersection of Madison Ave & McCarty Ave

MER-1

56

Add "Closed", Add "East"
Corner of Meridian St. & 13th St.

MER-2

57

Add "Closed", Add "East"
Approx. Intersection of Meridian St. and 12th St.

MER-3

58

Add "East"
Approx. Intersection of
Meridian St. and 11th St.

11TH-1

59

Add "Closed", Add "East"
11th St. & Illinois St.

11TH-2

60

Add "Closed", Add "East"
Intersection of
11th St. & Delaware St.

11TH-3

61

Add "Closed", Add "East"
Apprx. Intersection of 11th St. & Pennsylvania Ave.

DEL-1

62

Add "Closed", Add "East"
Delaware St. & 11th St.

PENN-1

63

Add "Closed", Add "East"
Corner of Pennsylvania Ave. & 12th St.

WASH-1

64

Add "Closed"
Corner of Washington St. & Davidson St.

MOT SHEET 12 of 32

Signs 52 to 64

SHAM N. MALU
REGISTERED
No. PE10910561
STATE OF INDIANA
PROFESSIONAL ENGINEER

RECOMMENDED FOR APPROVAL — DESIGN ENGINEER — 6/5/2013 DATE

INDIANA
DEPARTMENT OF TRANSPORTATION

MAINTENANCE OF TRAFFIC
EXISTING SIGNS

DESIGNED: SNM | DRAWN: SJC
CHECKED: JTL | CHECKED: JTL

HORIZONTAL SCALE	BRIDGE FILE
N/A	
VERTICAL SCALE	DESIGNATION
N/A	1382490
SURVEY BOOK	SHEETS
	22 of 185
CONTRACT	PROJECT
R-35730	1382490

IP_PWP:dms02094\Sht MOT_15.dgn
04-JUN-2013

S-KEY-1
65
N.B. past Ramp to I-465

S-KEY-2
66
S.B. past intersection of Werges & Keystone

N-65-5
67
N.B. I-65 before 104.4

N-SHADE-1
68
N.B. before intersection of Western Select Drive and Shadeland

N-SHADE-2
69
N.B. past intersection of 21st and Shadeland

S-SHADE-1
70
S.B. on North Shadeland before intersection of Western Select Dr and Shadeland

S-MAD-1
71
E.B. on S-Mad,
Corner of Madison and McCarty

N-65-6
72
N.B. I-65 before 105.8

S-HARD-1
73
S.B. on S-Hard past the intersection of Oliver ave. and South Harding

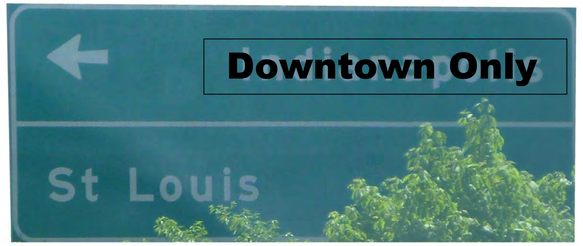

S-HOLT-1
74
S.B. on S-Holt past the intersection of South Holt and Washington St.

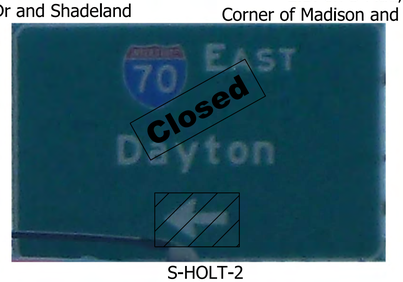

S-HOLT-2
75
S.B. on S-Holt on the bridge over I-70 E/W

S-JONES-1
76
E.B. on Sam Jones just before bridge over I-70 E/W

S-JONES-2
77
E.B. on Sam Jones on bridge over I-70 E/W

S-HOLT-3
78
N.B. on S-Holt at the corner of Holt and Morris St.

S-HARD-2
79
W.B. on S-Hard past intersection of South Harding and West Morris St.

MOT SHEET 13 of 32

Signs 65 to 79

SHAM N. MALU
REGISTERED
No. PE10910561
STATE OF INDIANA
PROFESSIONAL ENGINEER

RECOMMENDED FOR APPROVAL — DESIGN ENGINEER — 6/5/2013 DATE

DESIGNED: SNM | DRAWN: SJC
CHECKED: JTL | CHECKED: JTL

INDIANA
DEPARTMENT OF TRANSPORTATION

MAINTENANCE OF TRAFFIC
EXISTING SIGNS

HORIZONTAL SCALE	BRIDGE FILE
N/A	
VERTICAL SCALE	DESIGNATION
N/A	1382490
SURVEY BOOK	SHEETS
	23 of 185
CONTRACT	PROJECT
R-35730	1382490

IP_PWP:dms02094\Sht MOT_16B.dgn
04-JUN-2013

W 70-5

(83)

Add "Arrow"
Before Mile Marker 83.9

65-S

(80)

Add "Closed"
Add "Exit Only"
Before Mile Marker 112.6

W 70-6

(84)

Add "Arrow"
After Mile Marker 83.6

65-S

(81)

Add "Exit Only"
After Mile Marker 112.6

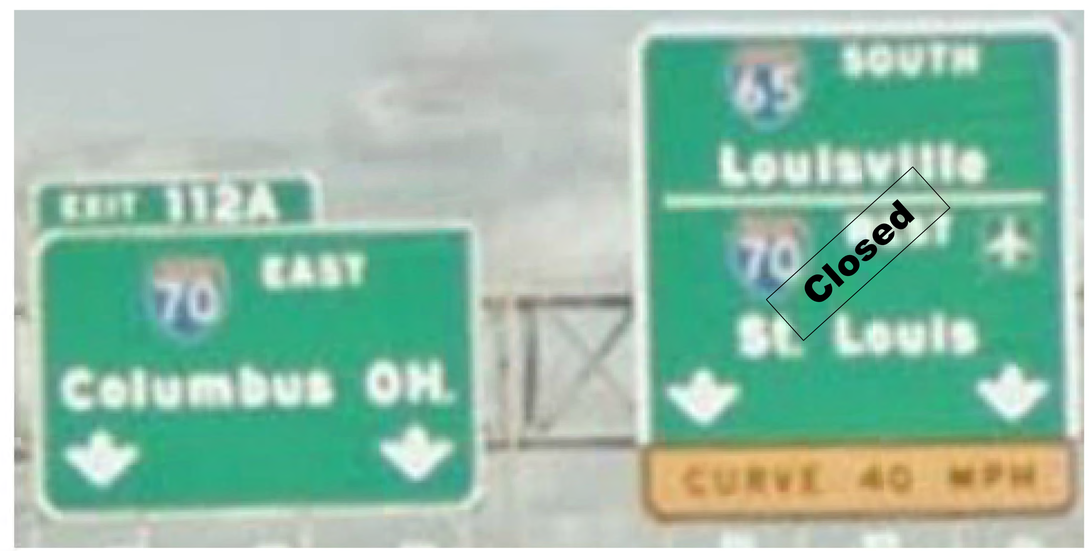

65-S

(82)

Add "Closed"
Before Mile Marker 112.4

MOT SHEET 14 of 32

Signs (80) to (82)

SHAM N. MALU REGISTERED No. PE10910561 STATE OF INDIANA PROFESSIONAL ENGINEER

RECOMMENDED FOR APPROVAL — DESIGN ENGINEER — 6/5/2013 DATE

DESIGNED: SNM DRAWN: SJC
CHECKED: JTL CHECKED: JTL

INDIANA
DEPARTMENT OF TRANSPORTATION

MAINTENANCE OF TRAFFIC
EXISTING SIGNS

HORIZONTAL SCALE	BRIDGE FILE
N/A	
VERTICAL SCALE	DESIGNATION
N/A	1382490
SURVEY BOOK	SHEETS
	24 of 185
CONTRACT	PROJECT
R-35730	1382490

IP_PWP:dms02094\Sht MOT_16C.dgn
04-JUN-2013

S-65-1
85
Add "East"
At Mile Marker 114.3

S-65-2
86
Add "Closed", Cover "KEEP RIGHT"
At Mile Marker 113.1

E-70-5
87
Add "Exit Oly with Arrow"
At Mile Marker 79.4

E-70-6
88
Add "Exit Only with Arrow"
At Mile Marker 79.6

89
Add "Exit Only with Arrow"
At Mile Marker 110.0

W-70-7
90
Add "Closed", Cover "LEFT 2 LANES"
At Mile Marker 84.9

MOT SHEET 15 of 32

Signs 85 to 90

SHAM N. MALU REGISTERED No. PE10910561 STATE OF INDIANA PROFESSIONAL ENGINEER

RECOMMENDED FOR APPROVAL	Sham Malu	6/5/2013	DESIGN ENGINEER / DATE
DESIGNED: SNM	DRAWN: SJC		
CHECKED: JTL	CHECKED: JTL		

INDIANA
DEPARTMENT OF TRANSPORTATION

MAINTENANCE OF TRAFFIC
EXISTING SIGNS

HORIZONTAL SCALE	BRIDGE FILE
N/A	
VERTICAL SCALE	DESIGNATION
N/A	1382490
SURVEY BOOK	SHEETS
	25 of 185
CONTRACT	PROJECT
R-35730	1382490

IP_PWP:dms02094\Sht MOT_16D.dgn
04-JUN-2013

1 The Contractor Shall Remove the Covers Before Construction; and Closure of I-65/I-70 Lanes. Signs to be Removed after Construction.

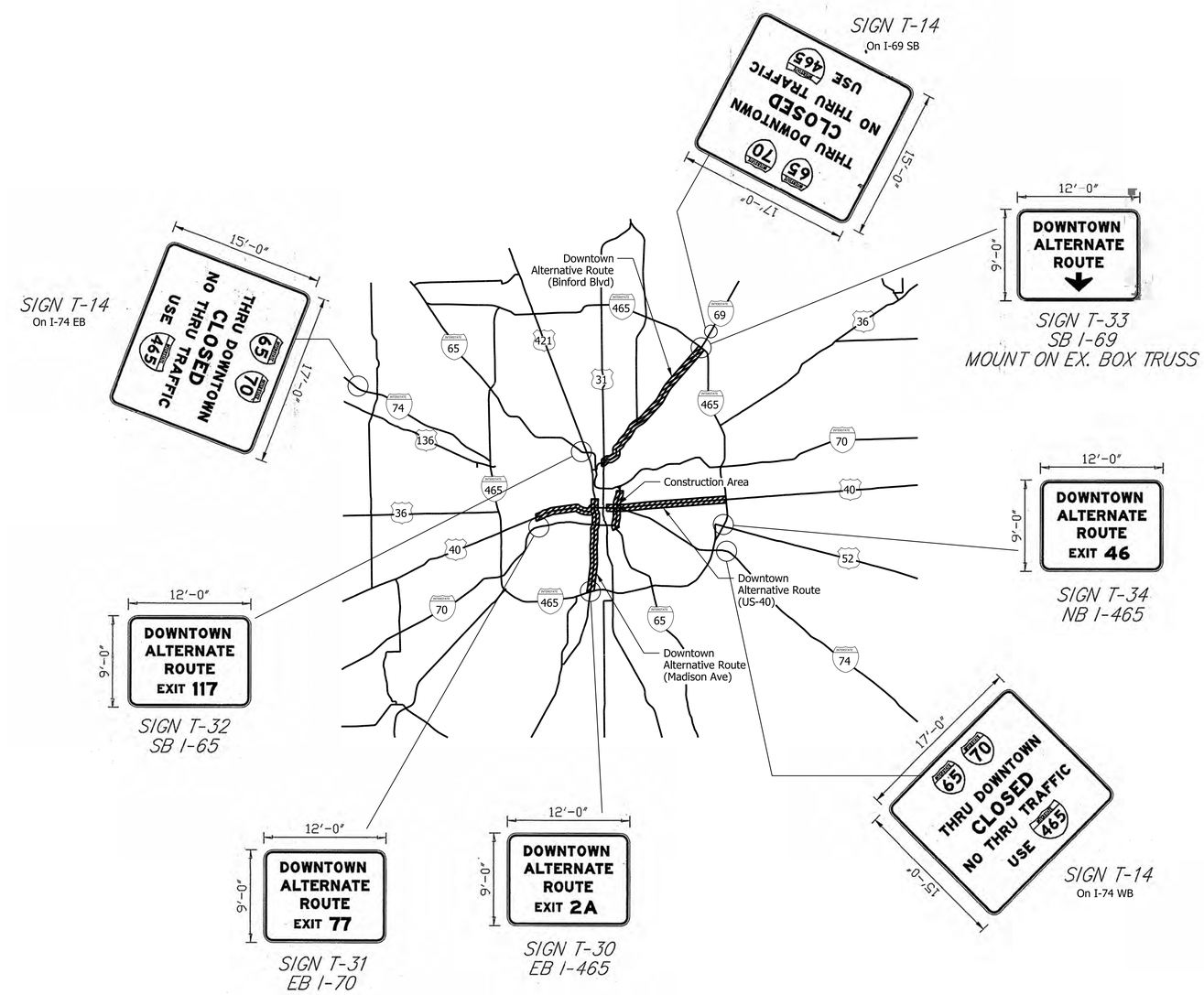

MOT SHEET 16 of 32

Signs to be Constructed by Others

SHAM N. MALU REGISTERED No. PE10910561 STATE OF INDIANA PROFESSIONAL ENGINEER

RECOMMENDED FOR APPROVAL Sham Malu 6/5/2013
DESIGN ENGINEER DATE

DESIGNED: SNM DRAWN: SJC
CHECKED: JTL CHECKED: SNM

INDIANA
DEPARTMENT OF TRANSPORTATION

MAINTENANCE OF TRAFFIC
ALTERNATIVE ROUTES

HORIZONTAL SCALE	BRIDGE FILE
N/A	
VERTICAL SCALE	DESIGNATION
N/A	1382490
SURVEY BOOK	SHEETS
	26 of 185
CONTRACT	PROJECT
R-35730	1382490

IP_PWP:dms02094\Sht MOT_07.dgn
04-JUN-2013

1 The Contractor Shall Remove the Covers Before Construction; and Closure of I-65/I-70 Lanes. Signs to be Removed after Construction.

10 Miles from I-465 *SIGN T-1*

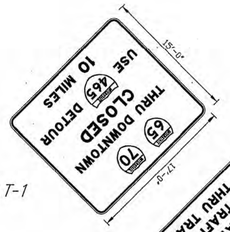

7 Miles from I-465 *SIGN T-8*

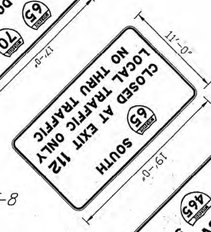

5 Miles from I-465 *SIGN T-9*

3 Miles from I-465 *SIGN T-10*

3 Miles from I-465 *SIGN T-11*

2 Miles from I-465 *SIGN T-12*

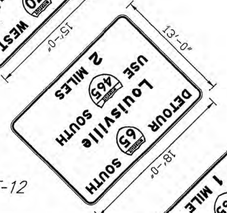

1 Mile from I-465 *SIGN T-13*

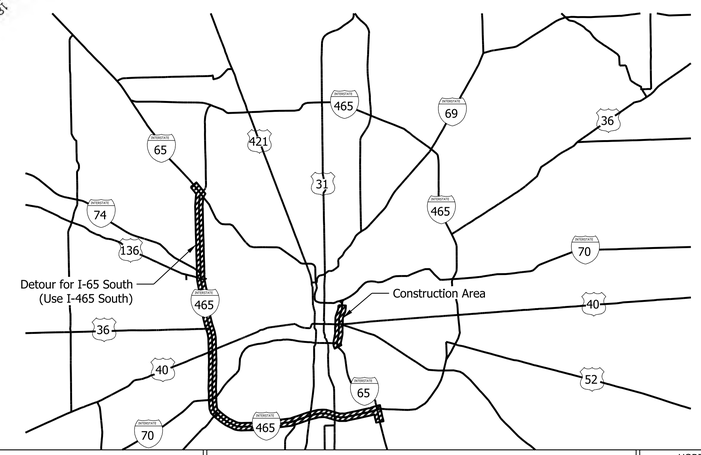

MOT SHEET 17 of 32

Signs to be Constructed by Others

SHAM N. MALU REGISTERED No. PE10910561 STATE OF INDIANA PROFESSIONAL ENGINEER

RECOMMENDED FOR APPROVAL	Sham Malu — DESIGN ENGINEER	6/5/2013 DATE	
DESIGNED: SNM	DRAWN: SJC		
CHECKED: JTL	CHECKED: SNM		

INDIANA
DEPARTMENT OF TRANSPORTATION

MAINTENANCE OF TRAFFIC
DETOUR ROUTE FOR I-65 SOUTH

HORIZONTAL SCALE	N/A
VERTICAL SCALE	N/A
BRIDGE FILE	
DESIGNATION	1382490
SURVEY BOOK	
SHEETS	27 of 185
CONTRACT	R-35730
PROJECT	1382490

IP_PWP:dms02094\Sht MOT_08.dgn
04-JUN-2013

(1) The Contractor Shall Remove the Covers Before Construction; and Closure of I-65/I-70 Lanes. Signs to be Removed after Construction.

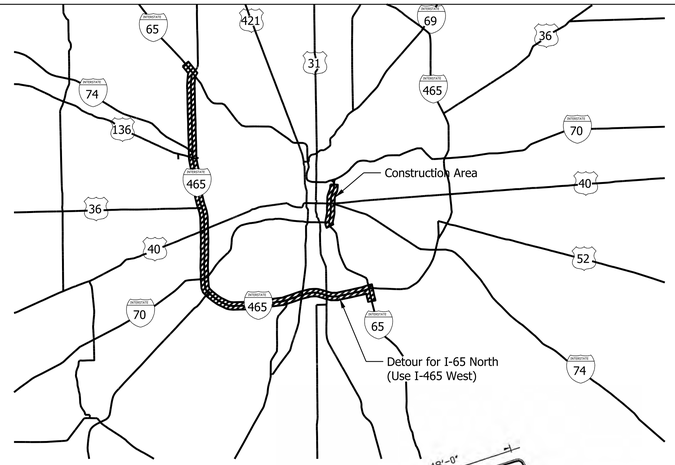

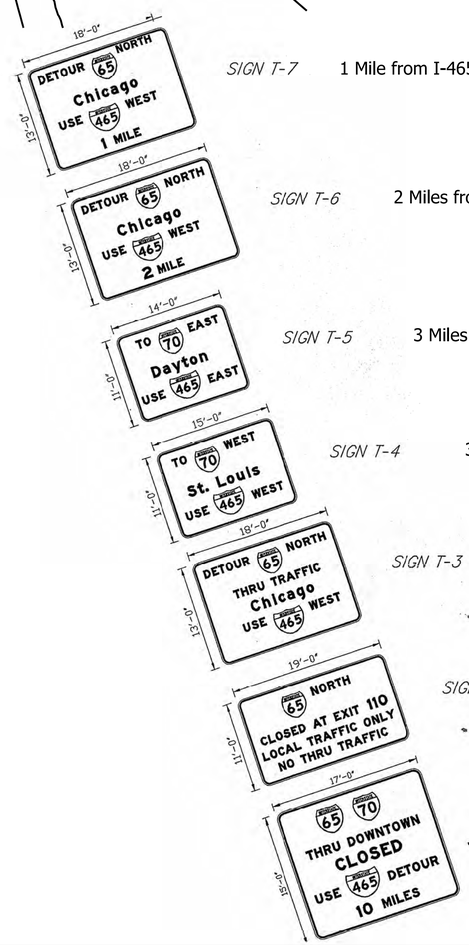

SIGN T-7 1 Mile from I-465

SIGN T-6 2 Miles from I-465

SIGN T-5 3 Miles from I-465

SIGN T-4 3 Miles from I-465

SIGN T-3 5 Miles from I-465

SIGN T-2 7 Miles from I-465

SIGN T-1 10 Miles from I-465

MOT SHEET 18 of 32

Signs to be Constructed by Others

SHAM N. MALU REGISTERED No. PE10910561 STATE OF INDIANA PROFESSIONAL ENGINEER

RECOMMENDED FOR APPROVAL	Sham Malu — DESIGN ENGINEER	6/5/2013 DATE	
DESIGNED: SNM	DRAWN: SJC		
CHECKED: JTL	CHECKED: SNM		

INDIANA
DEPARTMENT OF TRANSPORTATION

MAINTENANCE OF TRAFFIC
DETOUR ROUTE FOR I-65 NORTH

HORIZONTAL SCALE	BRIDGE FILE
N/A	
VERTICAL SCALE	DESIGNATION
N/A	1382490
SURVEY BOOK	SHEETS
	28 of 185
CONTRACT	PROJECT
R-35730	1382490

IP_PWP:dms02094\Sht MOT_09.dgn
04-JUN-2013

(1) The Contractor Shall Remove the Covers Before Construction; and Closure of I-65/I-70 Lanes. Signs to be Removed after Construction.

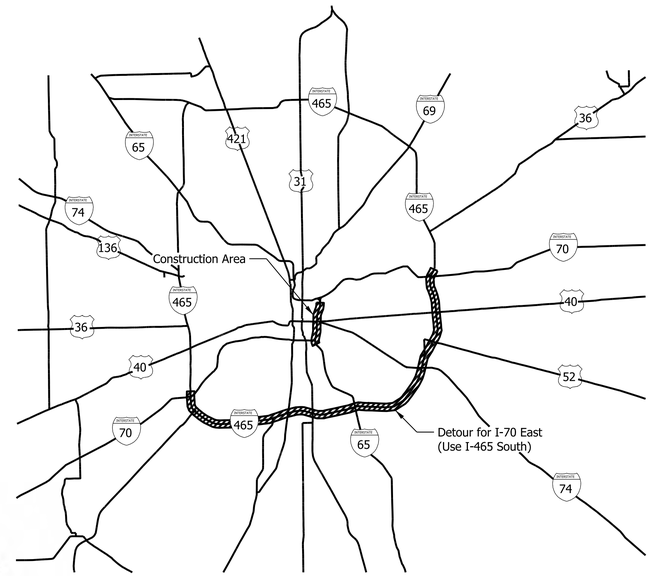

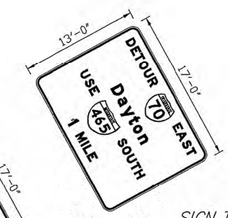

SIGN T-26 1 Mile from I-465

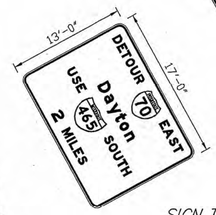

SIGN T-25 2 Miles from I-465

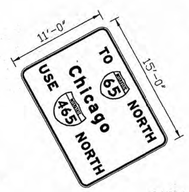

SIGN T-24 3 Miles from I-465

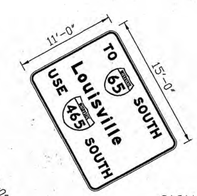

SIGN T-23 3 Miles from I-465

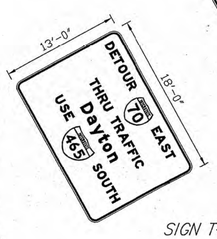

SIGN T-22 5 Miles from I-465

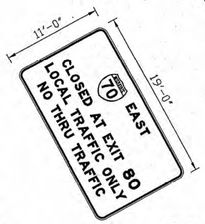

SIGN T-21 7 Miles from I-465

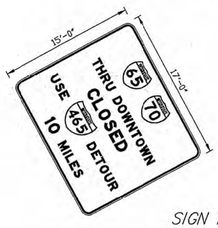

SIGN T-1 10 Miles from I-465

MOT SHEET 19 of 32

Signs to be Constructed by Others

SHAM N. MALU REGISTERED No. PE10910561 STATE OF INDIANA PROFESSIONAL ENGINEER

RECOMMENDED FOR APPROVAL — DESIGN ENGINEER — DATE 6/5/2013

DESIGNED: SNM DRAWN: SJC

CHECKED: JTL CHECKED: SNM

INDIANA
DEPARTMENT OF TRANSPORTATION

MAINTENANCE OF TRAFFIC
DETOUR ROUTE FOR I-70 EAST

HORIZONTAL SCALE	BRIDGE FILE
N/A	
VERTICAL SCALE	DESIGNATION
N/A	1382490
SURVEY BOOK	SHEETS
	29 of 185
CONTRACT	PROJECT
R-35730	1382490

IP_PWP:dms02094\Sht MOT_10.dgn
04-JUN-2013

(1) The Contractor Shall Remove the Covers Before Construction; and Closure of I-65/I-70 Lanes. Signs to be Removed after Construction.

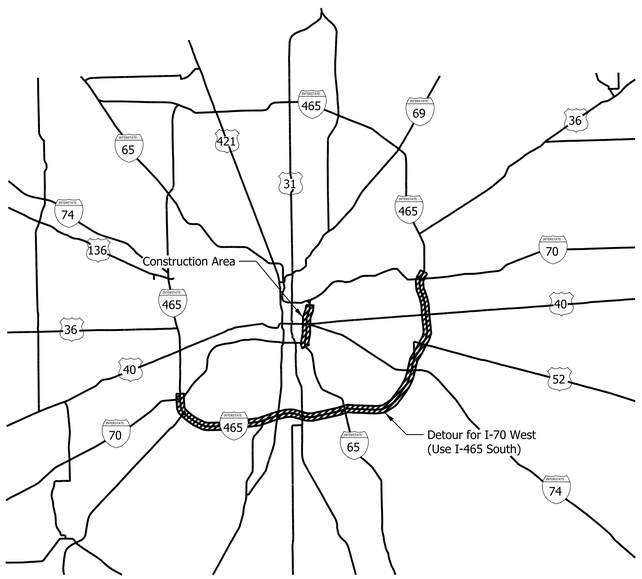

1 Mile from I-465
SIGN T-20

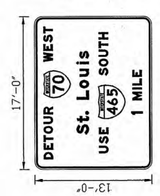

2 Miles from I-465
SIGN T-19

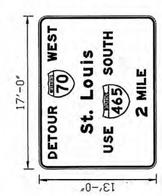

3 Miles from I-465
SIGN T-18

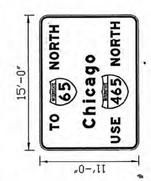

3 Miles from I-465
SIGN T-17

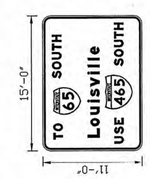

5 Miles from I-465
SIGN T-16

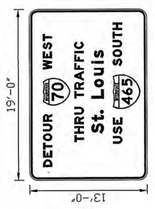

7 Miles from I-465
SIGN T-15

10 Miles from I-465
SIGN T-1

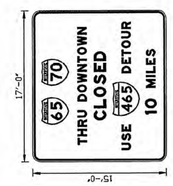

MOT SHEET 20 of 32

Signs to be Constructed by Others

SHAM N. MALU
REGISTERED
No. PE10910561
STATE OF INDIANA
PROFESSIONAL ENGINEER

RECOMMENDED FOR APPROVAL — DESIGN ENGINEER — 6/5/2013 DATE

DESIGNED: SNM | DRAWN: SJC
CHECKED: JTL | CHECKED: SNM

INDIANA
DEPARTMENT OF TRANSPORTATION

MAINTENANCE OF TRAFFIC
DETOUR ROUTE FOR I-70 WEST

HORIZONTAL SCALE	BRIDGE FILE
N/A	
VERTICAL SCALE	DESIGNATION
N/A	1382490
SURVEY BOOK	SHEETS
	30 of 185
CONTRACT	PROJECT
R-35730	1382490

IP_PWP:dms02094\Sht MOT_11.dgn
04-JUN-2013

Attachment F

TP Section 12 Maintenance of Traffic

12 MAINTENANCE OF TRAFFIC

12.1 General

Design-Build Contractor shall conduct all Work necessary to minimize traffic impacts, vehicular delay, and the exposure to potential hazards for both motorists and highway workers in the Project ROW. This Section 12 defines specific requirements, restrictions, and allowable closure durations for travel lanes, ramps, and local streets.

Design-Build Contractor shall design and construct the temporary facilities, haul routes, and access in accordance with the PPA Documents, including Project Standards, and this Section 12; Governmental Approvals; and Governmental Rules.

Design-Build Contractor shall be responsible for coordinating with other projects within the vicinity of the Project, including scheduling of Movement Closures, detours, temporary alignments, and phasing of Construction Work.

12.2 Required Personnel

12.2.1 Maintenance of Traffic (MOT) Manager

Design-Build Contractor shall identify a MOT Manager who shall be responsible for the following:

1. Coordinate maintenance of traffic (MOT) activities with INDOT and other Governmental Entities.
2. Implement traffic management strategies.
3. Provide an MOT report to INDOT with each change in traffic phasing and MOT phase durations, including monitoring and reporting of incidents.
4. Be available during construction until Substantial Completion and the elimination of all temporary traffic control, and after Substantial Completion whenever temporary traffic control is required.
5. Supervise the activities of the CWTS.
6. Oversee MOT plan design.

12.2.2 Certified Worksite Traffic Supervisor (CWTS)

Design-Build Contractor shall provide a CWTS on-Site in accordance with Section 801.03 of the Standard Specifications. The CWTS shall be under the supervision of the MOT Manager.

12.3 Performance Requirements

12.3.1 Transportation Management Plan (TMP)

Design-Build Contractor shall prepare, implement, and maintain a TMP in accordance with Project Standards. Design-Build Contractor shall obtain INDOT approval of the TMP prior to

initiation of any Construction Work. Design-Build Contractor shall provide updates to the TMP and submit to INDOT for approval no later than 14 days after the occurrence of a change or direction triggering the need for the revisions to the TMP.

The TMP shall include a Traffic Operations Plan (TOP), a Temporary Traffic Control Plan (TTCP), a Traffic Incident Management Plan (TIMP), and a coordination process with the INDOT PIP, described in Section 5 (Public Involvement). INDOT will provide Design-Build Contractor with a list of INDOT representatives for the INDOT Transportation Team to be included in Design-Build Contractor's TMP. The TMP shall be developed in coordination with emergency service providers, school transportation officials, all affected Governmental Entities and other stakeholders. The TMP shall include procedures to communicate all MOT phase installations and changes with such affected Governmental Entities and stakeholders.

The TMP shall be developed in coordination with and be consistent with the INDOT PIP and include procedures to communicate TMP information by the Public Information Coordinator of all MOT work to the public, stakeholders, and Governmental Entities prior to implementation of any MOT phase or phase change.

The TOP shall include:

1. Design-Build Contractor identification of a MOT Manager to coordinate all construction traffic impacts with INDOT's PIP Manager and TMP Team, and with Design-Build Contractor's CWTS, who is responsible for monitoring daily MOT activities.
2. Descriptions of contact methods and response times of the CWTS to address any MOT conditions needing attention during all hours.
3. Coordination with the TIMP, including identification of staging areas where equipment or vehicles needed for incident clearance response can be stored and have reasonable and safe access to the construction zones. Design-Build Contractor shall have the necessary equipment on-Site to repair temporary barrier and/or to set up temporary traffic control until the barrier can be repaired.
4. Procedures to identify and incorporate the needs of transit operators, Utility Owners, and business owners in the Project corridor, including Utility Owner access and business access signing.
5. Identification of measurable limits for the repair and replacement of traffic control devices, including pavement markings, according to Project Standards.
6. A process to identify, design, and obtain required approval for all necessary temporary traffic signals or modifications to existing traffic signals.
7. A process to determine the need for revised traffic signal timings, and if revisions are required, and detailed procedures for the development, approval, implementation, testing, and maintenance of all affected signals.
8. A work zone access management map and a construction haul route map for each construction phase.
9. Methods and frequency of inspection and maintenance of all traffic control devices throughout the Planned ROW Limits.

10. Provisions to provide continuous access to established truck routes and any hazardous material routes.

11. Procedures for modification of the TMP as needed.

12.3.2 TMP Team Meetings

Design-Build Contractor shall establish a team to execute the TMP ("TMP Team"), inviting representatives of Design-Build Contractor (including its Public Information Coordinator), INDOT, Governmental Entities, law enforcement agencies, emergency response providers, and other stakeholders and agencies whose operations affect or are affected by the Project construction or TMP.

12.3.2.1 Initial Meeting

Design-Build Contractor shall arrange and hold an initial MOT meeting with INDOT and all affected Governmental Entities at least four weeks prior to initial installation of the initial traffic control devices for beginning MOT phase.

12.3.2.2 Monthly Meetings

Design-Build Contractor shall hold monthly TMP Team meetings from commencement of construction to Substantial Completion. The meeting schedule and frequency may be adjusted upon the agreement of the TMP Team members. Design-Build Contractor shall meet the following objectives at these meetings:

1. Further refine and develop the MOT Plans.
2. Review the Contractor's MOT details, including review of MOT- and traffic-related environmental commitments.
3. Disseminate Project MOT information, including up-coming MOT phase shifts to task force meeting attendees.
4. Obtain MOT input from task force meeting attendees.
5. Develop, refine, and review the Traffic Incident Management Plan (TIMP) and its implementation.
6. Review all Incidents within the Site, and mitigation measures, if needed.

The MOT Manager shall maintain the list of TMP Team members. This list shall include, at a minimum, the following: name, affiliation, work phone, and email. The list shall be sorted in alphabetical order by affiliation and then last name. The MOT Manager shall notify members of the TMP Team of meetings at least 14 days prior to any scheduled meeting.

12.3.3 Temporary Traffic Control Plan

Design-Build Contractor shall prepare, submit for INDOT approval, and implement an approved TTCP. An approved TTCP shall be included with each applicable Released for Construction (RFC) Documents submittal. The TTCP shall become part of the appropriate TMP as amendments once the TTCP is approved by INDOT.

The TTCP defines how Design-Build Contractor is to phase construction and detail all the required MOT elements of the physical work zone. The MOT Plans shall include all major traffic shifts, Movement Closures, use of temporary roadways, temporary traffic signals, modifications to all existing signage not applicable for each MOT phase, access modifications to businesses and residences, and proposed mitigation measures for traffic impacts. The anticipated duration of each phase shall also be noted on the Plan.

In addition to the requirements in the IDM, the TTCP shall include the following information:

1. A cover page/title sheet sealed by a Registered Professional Engineer.
2. Standard Drawings.
3. MOT Plans: The MOT Plans shall detail phases and shall identify all Movement Closures anticipated during the Work.
4. Detour and haul routes required for the purpose of Construction Work. Design-Build Contractor shall obtain approval from applicable Governmental Entities for all proposed detour and haul routes and shall obtain, pay for, and comply with requirements of all necessary Governmental Approvals and agreements required for said routes.
5. Special Provisions that include a switching procedure between each controlled MOT phase change. The switching procedure shall consist of the methods, actions, and signing necessary to complete the switch and the number and duties of traffic personnel assigned to perform the switch.
6. Special Provisions that describe a process for transitioning from temporary signage and temporary pavement marking to permanent signing and permanent pavement marking.
7. Special Provisions that describe Design-Build Contractor coordination with the construction and maintenance projects of Governmental Entities that are adjacent to or near the Project ROW. The Special Provisions shall include a coordination clause listing other adjacent or nearby construction projects. At a minimum, this shall include the projects listed in Section 1 (General Scope of Work).
8. Special Provisions that require Design-Build Contractor to maintain existing access to all properties within the Project ROW for the duration of the Construction Work, except as provided elsewhere in the PPA Documents. Appropriate information about access modifications shall be made available to the property owners as required in the INDOT PIP.

The MOT Plans shall be prepared in accordance with Project Standards and include the following additional items for each phase of construction:

1. Ingress/egress locations and details for DB-Related Entities
2. Haul routes
3. Temporary local street closures and detour routes
4. Temporary pedestrian and bicycle detour routes

12.3.4 Traffic Incident Management

12.3.4.1 Traffic Incident Management Plan

Design-Build Contractor shall prepare and submit the Traffic Incident Management Plan as part of the TMP for review and comment by INDOT. The TIMP shall include procedures for interaction with INDOT, emergency responders, and other Governmental Entities.

Design-Build Contractor shall coordinate resources on the Site and between all the emergency services providers as required for efficient response in emergency situations.

As part of the TMP Team meetings, Design-Build Contractor shall facilitate establishing policies and procedures that specifically address the detection, verification, response, management, and clearance of incidents within or adjacent to the Site. Design-Build Contractor shall assign at a minimum the designated CWTS to participate in the TMP Team as Design-Build Contractor's Incident Management Liaison. Prior to the start of Construction Work, the Incident Management Liaison shall arrange for and conduct a one- to two-hour, Incident management training session for Design-Build Contractor's Key Personnel, superintendents, and lead foremen, with an invitation to (and sufficient prior notice of the date) INDOT. This training will familiarize Design-Build Contractor's personnel with the Incident management procedures developed by the TIMP Team that will need to be followed throughout the term of the PPA.

Design-Build Contractor's Incident Management Liaison shall coordinate all incident response requirements with:

Mischa KachlerIncident Management Program Director
Work Zone Safety Section
INDOT Traffic Management Center
8620 East 21st Street Indianapolis, Indiana 46219
Telephone: 317-899-8604

12.3.4.2 mkachler@indot.in.govMeeting and Notification Requirements

The Incident Management Liaison shall be present at the regularly scheduled TMP Team meetings each month.

The Incident Management Liaison shall prepare Incident management maps as part of its TIMP submission to be reviewed by INDOT and distribute such approved maps to Governmental Entities identified by the TMP Team. The Incident Management Liaison shall update maps at a minimum of once per change of phase in MOT Plan or at the request of INDOT. The maps shall be no larger than 11 inches by 17 inches, in color, to an engineering scale, and include at a minimum the following:

1. Outline of the roadway geometry
2. Open travel lanes/ramps colored in green
3. Closed travel lanes/ramps with active construction in orange
4. Closed travel lanes/ramps accessible to emergency traffic in red
5. Temporary emergency vehicle access points with identifiers

6. Rally points for emergency vehicle escorts into the work area with identifiers defined by INDOT
7. Control points, such as mile markers and block numbers
8. Emergency road closure diversion points with identifiers
9. Diversion equipment and their locations
10. All entrance and exit ramps identified and labeled

The Incident Management Liaison shall meet with local emergency responder representatives at least 10 days prior to a major change in the MOT traffic patterns and coordinate with INDOT TMC.

The Incident Management Liaison shall attend the TMP meetings and present reports on Incidents.

12.3.4.3 Incident Response

Design-Build Contractor shall designate an individual person or persons to coordinate Design-Build Contractor's resources in response to an Incident either in the Project ROW, work zone, or portions of the roadways where traffic is in queues approaching the work zone. Design-Build Contractor shall provide INDOT, 7 days prior to commencement of Construction Work, of the phone and email contact information for such designee(s). Design-Build Contractor shall cause such designees' phone and email contact information to remain current until Final Acceptance. The designee(s) shall be available and on call by INDOT 24 hours a day, seven days a week. If necessary, in the event of an Incident, the designees shall have a response time of less than 30 minutes to the Incident site to oversee the use of Design-Build Contractor's resources to help resolve the Incident.

In the event of an Incident that impacts active travel lanes while construction operations are underway, Design-Build Contractor's personnel may be required to assist in establishing Movement Closures to isolate Incident scenes in an emergency situation. Also, Design-Build Contractor's heavy equipment may be required to assist in moving wreckage or debris from the travel lanes and realigning temporary barriers to facilitate reopening the road to normal traffic. The Incident Management Liaison shall coordinate these activities with emergency responders on the scene and INDOT.

Design-Build Contractor shall contact Indiana State Police (ISP) for disabled vehicles in active lanes and shoulders.

To facilitate with closures and provide current road conditions in an emergency situation that impacts active travel lanes, Design-Build Contractor shall supply at a minimum the following pieces of equipment to be located as directed by INDOT:

1. Flashing arrow sign for each interstate mainline approach to the work zone including ramps leading to the work zone.
2. Safety drums for every lane on the mainline where the flashing arrow sign is positioned.

12.4 MOT Design and Construction Requirements

12.4.1 Design Criteria

The information listed below shall be incorporated into the MOT Plans and the TMP.

1. Construction Zone Design Speed

    a. The construction zone design speed on I-65, I-70, and ramps shall be the existing posted speed limit on approaches to the work zone, with a maximum 10-mile-per-hour speed reduction within the work zone; all worksite speed limit signs must conform to the provisions of INDOT Construction Memo 14-06.

    b. For those existing ramps with an advisory posted speed limit, the construction zone design speed within the work zone shall be the advisory posted speed limit with a maximum 5-mile-per-hour speed reduction. The construction zone design speed on local streets shall be the existing posted speed limit.

1. Lane Widths. The minimum MOT lane width shall be 11 feet on interstate mainline and ramps. The minimum MOT lane width within lane shifts on interstate mainline and ramps shall be 13 feet. The minimum MOT lane width on local streets shall match existing lane widths.

2. Separation Between Lane and Barriers

    a. A minimum shoulder width of 2 feet between barrier and edge of travel lane shall be provided. Design-Build Contractor is responsible for preparing and submitting any MOT Design Exceptions to INDOT for review and comment. Design-Build Contractor shall obtain INDOT's written approval of Design Exceptions prior to inclusion in the TTCP.

    b. Temporary concrete barrier and approved end treatments shall be used to protect the motoring public from the work area within the Planned ROW Limits when work or equipment, including personal vehicles and trucks used for loading and unloading, are within the construction clear zone. Temporary concrete barrier or temporary guardrail shall be provided if the entire construction clear zone is not traversable or if hazards exist within the construction clear zone.

    c. Opposing traffic lanes of interstate traffic shall be separated by existing, permanent, or temporary concrete barrier if construction clear zone distance is not provided.

    d. All temporary concrete barriers shall have reflectorized barrier delineators.

3. All MOT signing and design procedures for lane shifts and Movement Closures shall be in accordance with the Project Standards.

4. Pavement Edge Drop-Offs

    a. Pavement edge drop-offs 2 inches or less shall be delineated by barrels or vertical panels, spaced (i) every 40 feet or (ii) a distance in feet equivalent to two times the speed limit in miles per hour, whichever is less.

    a. Drop-offs greater than 2 inches shall comply with the following:

1) Shall be wedged with dense graded aggregate or HMA on a 3:1 (H:V) or flatter slope if horizontal separation is less than required construction clear zone between traffic and the drop-off and if no positive protection is provided. If a horizontal separation of required construction clear zone or greater can be achieved between traffic and the drop-off, no wedging is required. Design-Build Contractor shall provide the wedge prior to the use by the public of the travel lane at that location.

2) Shall be delineated by barrels spaced (i) every 40 feet or (ii) at an interval in feet equivalent to two times the construction zone speed limit in miles per hour, whichever is less.

5. Channelizing Devices

   a. Temporary channelizing device spacing in tapers shall be a maximum of 40 feet center-to-center or a distance in feet equivalent to the speed limit in miles per hour, whichever is less. Device spacing in tangent sections of mainline and ramps (including curves) shall be a maximum of 80 feet center-to-center or a distance in feet equivalent to two times the speed limit in miles per hour, whichever is less. On local roadways, device spacing shall be a maximum of 20 feet center-to-center in tapers, 40 feet center-to center in tangent sections, and 6 feet center-to-center in radii.

   b. Design-Build Contractor shall provide, erect, and maintain channelizing devices, signs, barriers, and other traffic control devices used for MOT in acceptable condition, in accordance with the Project Standards.

6. Design-Build Contractor shall supply all flashing arrows and variable message boards necessary to maintain traffic. Upon Final Acceptance, as between INDOT and Design-Build Contractor, the flashing arrows shall remain the property of Design-Build Contractor.

7. Design-Build Contractor shall maintain positive drainage to avoid ponding of water in the active travel lanes for a two-year storm at all times during all phases of Construction Work.

8. Traffic signals, either temporary or permanent, shall remain operational from beginning of implementation to end of implementation.

9. Single lane temporary crossovers shall be per the INDOT Standard Drawings. Multi-lane temporary crossover designs shall be submitted for INDOT review and comment. Design-Build Contractor shall obtain INDOT approval of final temporary crossover locations prior to its construction.

10. Design-Build Contractor shall maintain reference markers until Final Acceptance.

11. Design-Build Contractor shall maintain access to all INDOT Intelligent Transportation System (ITS) and Automatic Traffic Recorder (ATR) equipment.

12. Barriers shall not impede snow removal operations. To facilitate snow removal operations by INDOT, from December 1 through March 31 each year, Design-Build Contractor shall maintain a minimum of 4 feet paved inside shoulder and 8 feet paved outside shoulder adjacent to active mainline and ramp travel lanes. Design-Build Contractor shall obtain INDOT approval of any shoulder width reductions prior to

implementation. Shoulders adjacent to temporary barriers on bridges are exempt from these width requirements.

13. Design-Build Contractor shall provide a patroller to inspect and maintain traffic control devices when traffic lanes are restricted. The patroller shall patrol the construction zone and shall immediately correct, maintain, and repair traffic control devices or notify Design-Build Contractor's designated persons for immediate repair to such traffic control devices. Design-Build Contractor shall provide a full-time patroller on duty during periods when work is not in progress.

14. Design-Build Contractor shall reconfigure Washington Street/I-65/I-70 Interchange with the following temporary improvements within existing roadway limits:

    a. Convert eastbound Washington Street left turn lane into second left turn lane for westbound Washington Street to I-65 SB/I-70 WB entrance ramp.

    b. Convert westbound Washington Street right lane into a shared through/right turn to I-65 SB/I-70 WB entrance ramp,

    c. Provide three left turn lanes, one through, one through/right and one right turn lane for the I-65 NB/I-70 EB exit ramp,

    d. Eliminate or cover westbound Washington Street signal at Davidson Street. SB Davidson Street shall be converted to a right turn lane only with stop control.

    e. A concept pavement marking and temporary signal detail is provided in the Reference Design.

    f. Design-Build Contractor shall construct the temporary improvements at the Washington Street interchange prior to any mainline or ramp Movement Closures.

    g. Design-Build Contractor shall return the temporary improvements to the existing lane configurations after completion of all interstate and mainline Movement Closures.

12.4.2 Traffic Through the Construction Zone

Access to all businesses and residences on local streets shall be maintained at all times. Design-Build Contractor shall maintain existing roads and streets within the Project ROW, except during approved closures, and, regardless, in a good, clean, safe condition at all times. Design-Build Contractor shall also maintain roads and streets used for detour routes when affected by the Work.

A Conceptual MOT Detour Route exhibit is included in the RID for each of the local roadway closures. Design-Build Contractor shall be responsible for coordination with the Indianapolis DPW and receive approval for any changes to these detour routes.

Design-Build Contractor shall have maintenance responsibility for all needed construction and haul roads used for the delivery of materials required for the Work in accordance with Project Standards and legal load restrictions. Design-Build Contractor shall obtain, pay for, and comply with the conditions of all necessary Governmental Approvals from the appropriate Governmental Entities for temporary roadways, including Construction Work and, as applicable, haul routes.

Design-Build Contractor shall coordinate the placement and operation of portable changeable message signs with INDOT. Changeable message signs shall be placed four weeks in advance of changing traffic patterns.

Design-Build Contractor shall not use local streets through residential neighborhoods for access to the Site without permission from Local Agencies. Appropriate MOT and flagging procedures shall be followed during all Construction Work, including mobilization and demobilization activities. Deliveries and hauling to and from the Site shall be confined to the Project ROW and performed via designated haul routes along the Project in accordance with the TMP.

Design-Build Contractor shall not place any ingress or egress locations to the Work area within the four interstate movements defined in Section 12.4.9.1.

Construction vehicles shall be equipped with flashing or rotating amber lights.

All construction equipment and supplies shall access the Site via a public road and remain on public roadways unless approved by INDOT.

12.4.3 Pedestrian and Bicycle Access During Construction

Design-Build Contractor shall maintain existing or detoured pedestrian and/or bicycle access on all sidewalks, trails, transit facilities and at all intersections that are open to traffic. Design-Build Contractor shall also maintain safe access and passage for all pedestrian facilities. Pedestrian sidewalks and paths shall be maintained and shall conform to ADA requirements. OSHA Governmental Rules that apply to the Project ROW shall also be considered the minimum standard for personal safety to pedestrians. If Work is performed over any pedestrian and bicycle routes, temporary lighted covered walkways shall be provided to protect pedestrians and bicyclists from overhead hazards.

If Work areas encroach upon a sidewalk or crosswalk area, and a minimum clear width per Project Standards cannot be maintained for pedestrian use, Design-Build Contractor shall provide an alternative accessible pedestrian route and obtain approval of the alternate route from the applicable agency having jurisdiction prior to implementation. Vehicular traffic shall be separated from pedestrians and/or bicycles and the construction zone.

Design-Build Contractor shall provide protective barricades, fencing, and bridges, together with warning and guidance devices and signs to protect the public. Design-Build Contractor shall provide suitable handrails whenever pedestrian walkways are provided across excavations. Foot bridges shall be safe, strong, free of bounce and sway; have a slip-resistant coating; and be free of cracks, holes, and irregularities. Design-Build Contractor shall provide ramps in accordance with Project Standards.

When the existing facility is illuminated and/or Work is required during the non-daylight hours, Design-Build Contractor shall provide temporary construction lighting. Design-Build Contractor shall provide retro reflective delineation, with or without illumination, during non-daylight hours.

Design-Build Contractor shall provide an alternate accessible pedestrian route that complies with the Project Standards where accessible pedestrian and/or bicycle routes are allowed to be closed by Design-Build Contractor during construction. The alternate accessible pedestrian route shall be in accordance with Project Standards.

Design-Build Contractor shall provide barricading or channelizing devices where it is necessary to divert pedestrians into the roadway to separate the pedestrian route from the adjacent vehicular traffic lane. Barricading or channelizing devices used to separate pedestrian and vehicular traffic shall be in accordance with Project Standards and, when struck by vehicles, present a minimum threat to pedestrians, workers, and occupants of impacting vehicles. At no time shall pedestrians be diverted into a portion of the street used concurrently by moving vehicular traffic.

Design-Build Contractor shall not park motor vehicles or construction equipment on a pedestrian sidewalk or path; use a pedestrian sidewalk or path for loading operations; stockpile materials; or allow demolished or spoil materials to be deposited on the surface of a pedestrian and/or bicycle sidewalk or path. Design-Build Contractor shall restore any surface of a pedestrian sidewalk or path affected by the Work to meet ADA standards prior to re-opening to pedestrian traffic. Sweep or wash the trail or sidewalk surface to be free of debris including, mud, gravel; grease; and excavated, spoiled, or stockpiled materials.

12.4.4 Construction Access and Haul Routes

Subject to any requirements to obtain and maintain Governmental Approvals or Other Approvals, Design-Build Contractor may use local streets for the following activities:

- Local roadway improvements
- Utility Adjustments
- Construction Work and implementation of roadway detours

12.4.5 Local Street Detour Routes

Design-Build Contractor shall maintain detour routes in a condition that is reasonably smooth and free from holes, ruts, ridges, bumps, dust, and standing water. Once the detour is removed and traffic is returned to its normal pattern, the detour route shall be restored to a condition that is equal or better than the existing condition. Design-Build Contractor shall provide video documentation to INDOT of existing condition of each local detour route upon commencement of use. All required signing and pavement markings shall meet IMUTCD standards and local requirements.

12.4.6 Portable Changeable Message Signs

Design-Build Contractor shall provide, operate, and maintain a minimum of 12 portable changeable message signs (PCMSs) where shown on the approved TTCP or when requested by INDOT. Along with the PCMSs required for the Project as part of the approved TTCP, Design-Build Contractor shall provide a minimum of four additional PCMSs on Site or available within 24 hours and in good working condition for use in emergencies. These additional PCMS signs shall be available on Site until Substantial Completion. Upon Final Acceptance, as between INDOT and Design-Build Contractor, the PCMSs will be the property of INDOT, and Design-Build Contractor shall execute and deliver all documents necessary to demonstrate INDOT's assumption of title.

12.4.7 Public Notification

Design-Build Contractor shall furnish and install information signs that provide advance notification of interstate, ramp, and local street Movement Closures a minimum of seven days prior to the scheduled Movement Closure. Design-Build Contractor shall show sign locations, messages, letter sizes, and sign sizes in the TTCP. For ramp and local street Movement Closures, Design-Build Contractor shall use PCMSs to supplement the required signs. Design-Build Contractor shall notify all 911 offices, police departments, local fire departments, city engineering departments, public transit agencies, and the affected school districts in writing a minimum of seven days prior to scheduled Movement Closures. Design-Build Contractor shall provide written copies of these notifications to INDOT.

12.4.8 Temporary Traffic Control Devices

All temporary traffic control devices for Movement Closures shall be installed in accordance with the requirements in Section 12.4.9.1 (Movement Closures).

12.4.9 Restrictions for Construction Work

Design-Build Contractor shall suspend Work associated with deliveries and off-Site hauling operations during holiday periods stipulated in Section 4.3 and local event days listed in Attachment 12-4 (Local Event Days). Design-Build Contractor shall not change traffic patterns, and shall suspend deliveries and off-Site hauling operations during local events. Design-Build Contractor shall identify any additional local events and submit to INDOT for concurrence.

12.4.9.1 Movement Closures

The requirements of this Section 12.4.9.1 apply throughout the term of the PPA.

Design-Build Contractor will be assessed Movement Charges in accordance with Section 17.3.1 of the PPA.

Outside of the single continuous occurrence Movement Closure durations in Tables 10-1, 10-2-1, and 10-3-1 of Exhibit 10 to the PPA, Design-Build Contractor will not be assessed Movement Charges for any off-peak Movement Closure for the time period indicated in Attachment 12-3 (Minimum Number of Lanes Open), provided that (a) Design-Build Contractor maintains the minimum number of lanes open to traffic during the applicable time period in Attachment 12-3 and (b) such off-peak Movement Closure is not due to in whole or in part to the acts or omissions of any DB-Related Entity or any Design-Build Contractor Fault. Furthermore, any Movement Closure from 10 p.m. to 5 a.m. that meets the temporary traffic stoppage requirements under Section 801.16(c) of the Standard Specifications will not be assessed Movement Charges, provided that Notice to INDOT is provided in accordance with Table 12-2 (Movement Closure Notification Periods).

Outside of the single or multiple occurrence maximum Local Street Movement Closure durations in Table 10-4-1 of Exhibit 10 of the PPA, Design-Build Contractor will not be assessed Movement Charges for (i) any Overnight Local Street Closure from 10 p.m. to 5 a.m., or (ii) a temporary Movement Closure that is in accordance with the temporary traffic stoppage requirements under Section 801.16(c) of the Standard Specifications or Overnight Local Street Closure, provided Notice to INDOT is provided in accordance with Section 12.4.10 (Notification and Coordination).

For Washington Street, (i) Design-Build Contractor shall maintain the existing number of lanes open to traffic throughout the term of the PPA, and (ii) during permitted Local Street Movement Closures on Washington Street during off-peak hours between 10 p.m. and 5 a.m., Design-Build Contractor shall maintain a minimum of two lanes in each direction.

No Overnight Local Street Closures are allowed for Washington Street and Pennsylvania Street.

Notwithstanding the foregoing, a Movement Closure will be deemed a Permitted Closure if INDOT declares such closure as an emergency or urgent as described in Appendix A of the IHCP.

12.4.9.1.1 Mainline Interstate Movement Closures

I-65 NB and I-70 EB mainline movements on the south leg of the North Split interchange from Washington Street interchange are allowed to be closed to through traffic subject to the requirements of this Section 12 and the PPA. Fletcher Avenue entrance ramp to I-65NB/I-70EB shall be closed when the I-65NB/I-70EB mainline movement is closed.

Design-Build Contractor shall comply with the requirements and commitments defined in approved Interstate Closure Request (provided as Attachment 12-2) and IHCP Exception (provided as Attachment 12-1). If Design-Build Contractor deviates from the requirements of Attachment 12-1 (IHCP Exception) and/or Attachment 12-2 (Interstate Closure Request), Design-Build Contractor shall submit a revised IHCP Exception and/or Interstate Closure Request to INDOT for review and approval.

Design-Build Contractor shall provide a minimum of four travel lanes in each direction for the term of the Project on I-70, east of the interchange proper, which is defined in Section 8.3.2.1. Design-Build Contractor may be allowed to reduce the minimum number of travel lanes on I-70, with prior INDOT approval, if fewer than four lanes are entering and/or exiting I-70 east of the interchange proper.

Design-Build Contractor shall provide a minimum of three travel lanes in each direction for the term on I-65, west of the interchange proper as defined in Section 8.3.2.1. Design-Build Contractor may be allowed to reduce the minimum number of travel lanes on I-65, with prior INDOT approval, if fewer than three lanes are entering and/or exiting I-65 west of the interchange proper.

Design-Build Contractor shall provide a minimum of two travel lanes in each direction for the term of the Project for the following movements:

1. I-70 WB to I-65 SB/I-70 WB Collector-Distributor Ramp. Provide two travel lanes from the C-D to the Michigan Street exit ramp, and/or to the Ohio Street exit ramp.
2. I-70 WB to I-65 NB.
3. I-65 SB to I-70 EB, except as noted in Exhibit 10 of the PPA.
4. Pine Street entrance ramp to I-70 EB. Provide two travel lanes of traffic at the Pine Street entrance for the entire length of the ramp, from the intersection with Michigan Street to the east project limit on I-70. The two travel lanes shall be provided during the time period when the Fletcher Avenue on ramp to I-65 NB/I-70 EB, I-65 SB to I-70 EB movement and/or the 12th Street on ramp to I-65 SB/I-70 EB are closed.

When I-65 NB and I-70 EB movements through the North Split interchange are closed, Design-Build Contractor shall provide positive protection to separate the I-70 EB movement from the I-70/West Street interchange to the South Split interchange. One lane of traffic shall be provided for the I-70 EB movement to access the Washington Street interchange exit ramp. Traffic entering EB I-70 from the I-70/West Street and I-70/Madison Avenue interchanges shall only have access to SB I-65.

Design-Build Contractor shall not exceed the maximum Movement Closure durations for the segments identified in Table 10-2-1 listed in Exhibit 10 of the PPA and except as provided in Section 12.4.9.1.

12.4.9.1.2 Ramp Movement Closures

Design-Build Contractor shall maintain the same number of existing traffic lanes open to traffic at all times during construction for the defined ramp movements, except as provided in Table 10-3-1 in Exhibit 10 of the PPA and Section 12.4.9.1.

Design-Build Contractor shall provide two lanes of traffic at the Washington Street interchange entrance and exit ramps to and from I-65/I-70 for the term of the PPA and Section 12.4.9.1.

12.4.9.1.3 Local Street Movement Closures

Design-Build Contractor shall maintain the same number of traffic lanes as the existing roadway and be open to traffic at all times during construction for the defined local roadway movements, except as provided in Table 10-4-1 in Exhibit 10 of the PPA.

12.4.9.1.4 Local Trail Movement Closures

The local trails listed in Table 12-1 within the Planned ROW Limits may be closed or provided a detour route. Design-Build Contractor shall submit a trail detour to the appropriate trail jurisdiction and to INDOT for review and approval. Design-Build Contractor shall request concurrence of the trail detour from the trail jurisdiction and INDOT prior to closing the trail.

Table 12-1: Allowable Local Trail Movement Closures

Local Trail	Movement Closure Limitation
Monon Trail from just south of 15th Street to 13th Street	Trail detour route required (see RID 12.02 Monon Trail Detour)
Payne Connection (north side of 10th Street) from Monon Trail to Bellefontaine Street.	Trail allowed to be closed during closure of 10th Street Movement Closure.

12.4.10 Notification and Coordination

The MOT Manager shall notify INDOT at least 28 days before the start of any Construction Work that would affect traffic operations, including placement or relocation of work zone signs.

The MOT Manager shall notify INDOT and the others listed in the TMP and this Section 12 in writing of all Movement Closures and upcoming MOT changes. Design-Build Contractor shall

submit written notification of movement closures in accordance with Table 12-2 prior to implementation of the Movement Closure. Information shall include all construction and maintenance activities that impact or interfere with traffic and shall list the specific location, type of work, type of Movement Closure (e.g. temporary, off-peak, Overnight Local Street Closure, etc.), date and time of Movement Closure, duration, number of lanes maintained, detour routes if applicable, and any other information as requested by INDOT. A summary of the notification time and requirements for Movement Closures is provided in Table 12-2.

Table 12-2: Movement Closure Notification Periods

Movement Closure	Duration	Notification Period
Interstate, Ramp and Local Street	Greater than 2 weeks	28 days before Movement Closure
	Greater than 12 hours and less than 2 weeks	7 days before Movement Closure
	Less than 12 hours	4 days before Movement Closure
Interstate, Ramp and Local Street impacting: School access and/or bus route Transit system operations	All Movement Closures	28 days before Movement Closure
Lane Closure/Restrictions	Greater or equal to 2 weeks	7 days before Movement Closure
	Less than 2 weeks	4 days before Movement Closure
Temporary Traffic Stoppages under Section 801.16(c) of the Standard Specifications	All Movement Closures	14 days before Movement Closure
Overnight Local Street Closures	All Movement Closures	14 days before Movement Closure

A pre-MOT meeting between INDOT and Design-Build Contractor shall be held a minimum of 21 days before beginning Construction Work in an area that would affect traffic operations, including placement or relocation of work zone signs, or executing any change of MOT staging. This meeting shall include INDOT and any Design-Build Contractor Subcontractors involved with temporary traffic control.

12.5 Deliverables

Deliverables under this Section 12, a non-exhaustive list of which is set forth in Table 12-3 below, shall be submitted in hard copy and electronic format in accordance with the schedule set forth below. Acceptable electronic formats include PDF and current versions of Microsoft Word and Microsoft Excel, unless otherwise indicated.

Table 12-3: Deliverables

Deliverable	Deliverable Schedule	TP Section
Transportation Management Plan (TMP)	Draft TMP within 30 Days after NTP; Final TMP 30 days prior to commencement of Construction Work; updates as needed.	12.3.1
Temporary Traffic Control Plan (TTCP)	Draft TTCP within 30 Days after NTP; Final TTCP 30 days prior to Commencement of Construction for each Buildable Unit; Updates as needed.	12.3.3
Traffic Incident Management Plan (TIMP)	Draft TMP within 30 Days after NTP; Final TMP 30 days prior to Commencement of Construction; Updates as needed.	12.3.4
Weekly Traffic Control Device Inspection Report	Weekly after NTP	12.3.1
Local events for suspension of Work	90 days after NTP	12.4.9
Modifications to IHCP Exception	With Stage 3 Submittal	12.4.9.1
Modifications to Interstate Closure Request	With Stage 3 Submittal	12.4.9.1
Local Trail Detour Route	60 days prior to implementation	12.4.9.1.4

Attachment G

MOT Alternates Traffic Diversions Analysis

I-65/I-70 North Split

MOT Coordination Meeting

INDOT

HNTB

Corradino

February 27, 2019

1. North Split Full Closure

North Split MOT Traffic Diversion

North Split Full Closure

vs.

Existing Condition

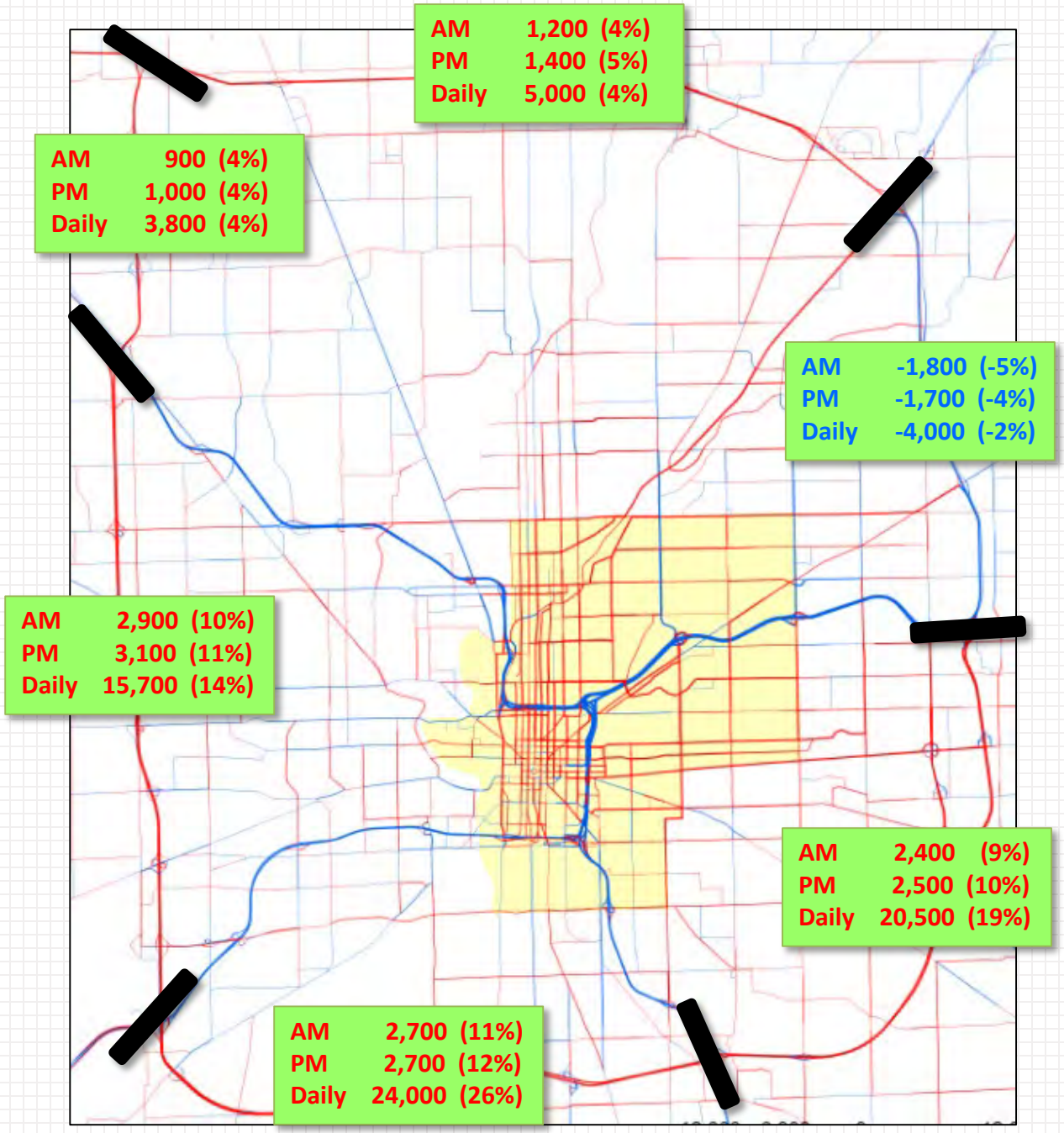

Source: Indy MPO 2016 Model (AM = 6-9am, PM = 3-6pm)

I-465 Volume/Capacity Ratio

Existing Condition (AM)

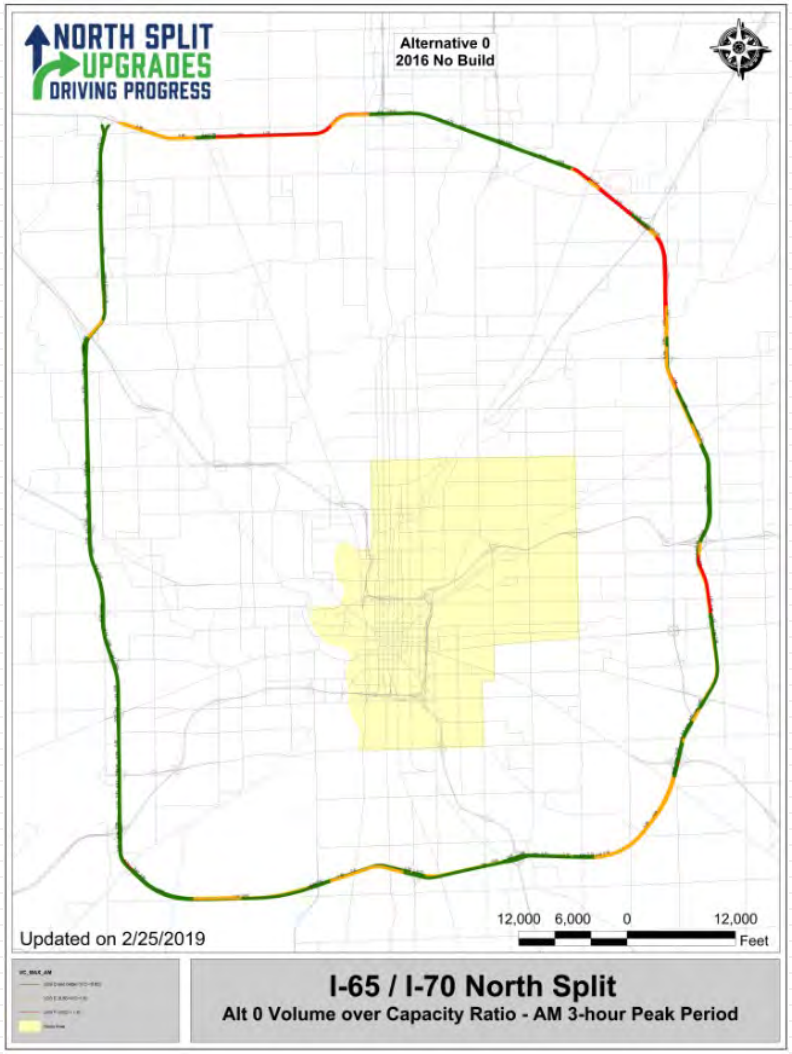

North Split Full Closure (AM)

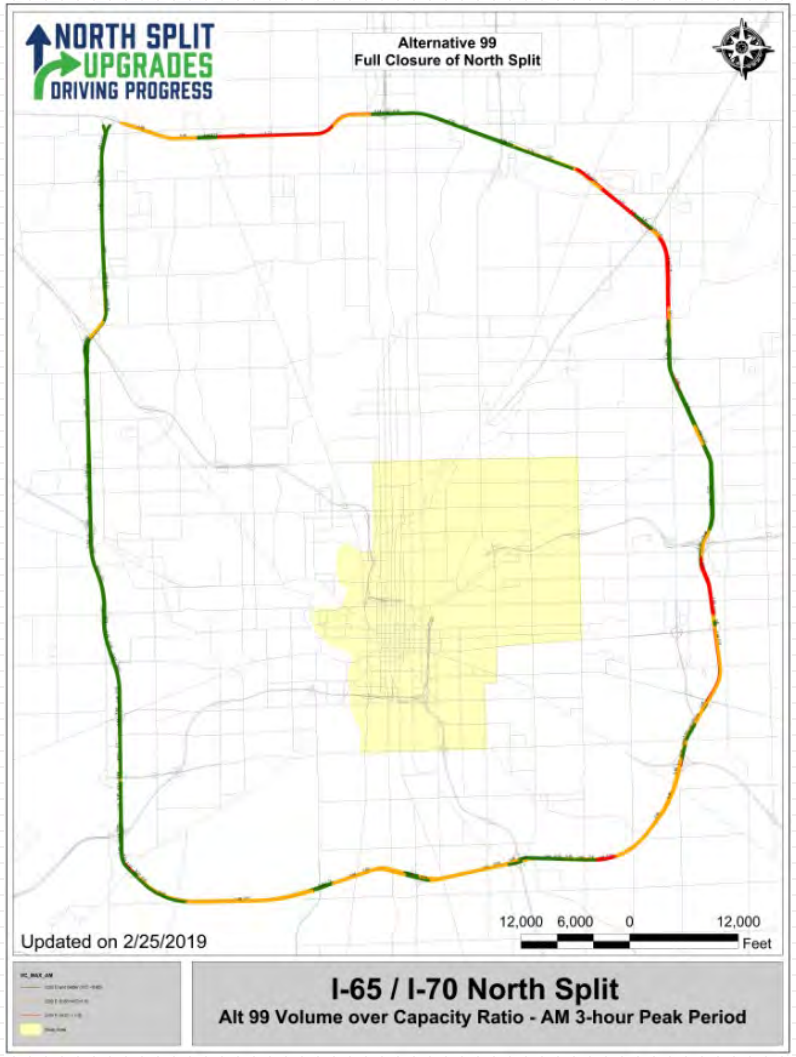

Source: Indy MPO 2016 Model (AM = 6-9am, PM = 3-6pm)

I-465 Volume/Capacity Ratio

Existing Condition (PM)

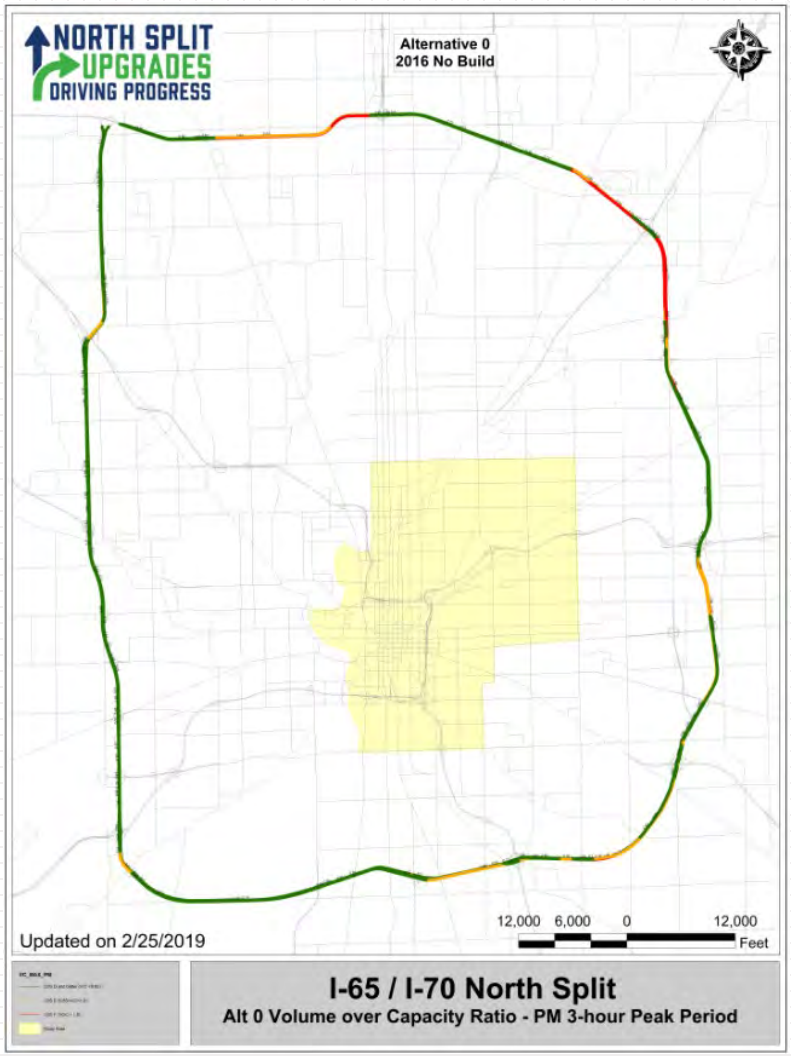

North Split Full Closure (PM)

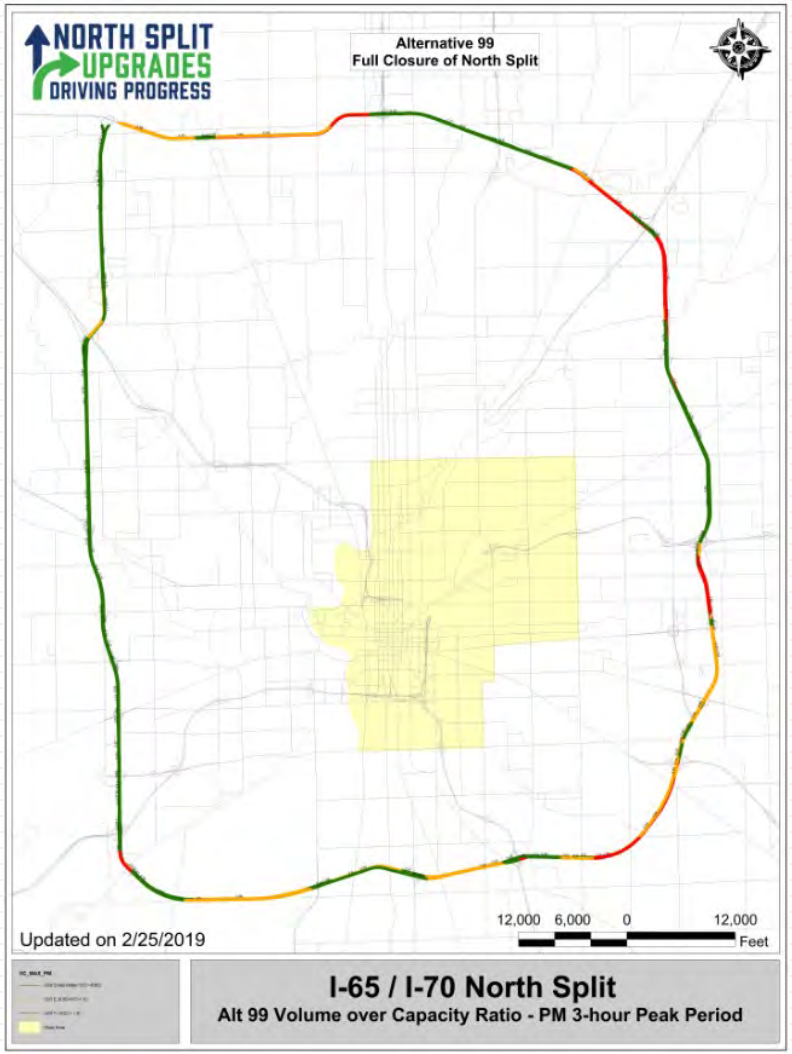

Source: Indy MPO 2016 Model (AM = 6-9am, PM = 3-6pm)

North Split MOT Traffic Diversion

North Split Full Closure

vs.

Existing Condition

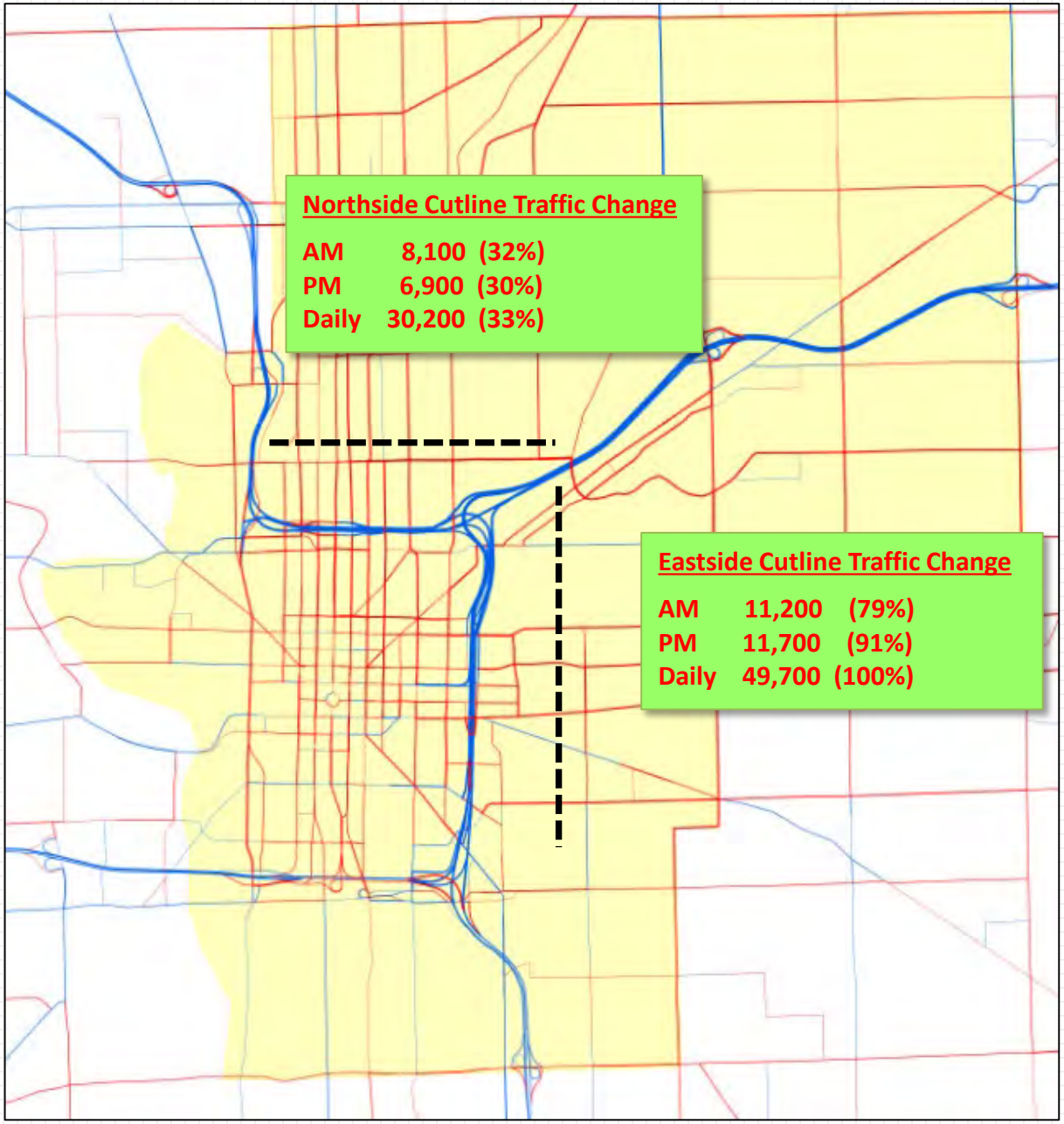

Source: Indy MPO 2016 Model (AM = 6-9am, PM = 3-6pm)

2. North Split Full Closure

(while keeping I-70 WB to I-65 NB ramp open)

North Split MOT Traffic Diversion

North Split Full Closure
(while keeping I-70 WB to I-65 NB ramp open)

vs.

Existing Condition

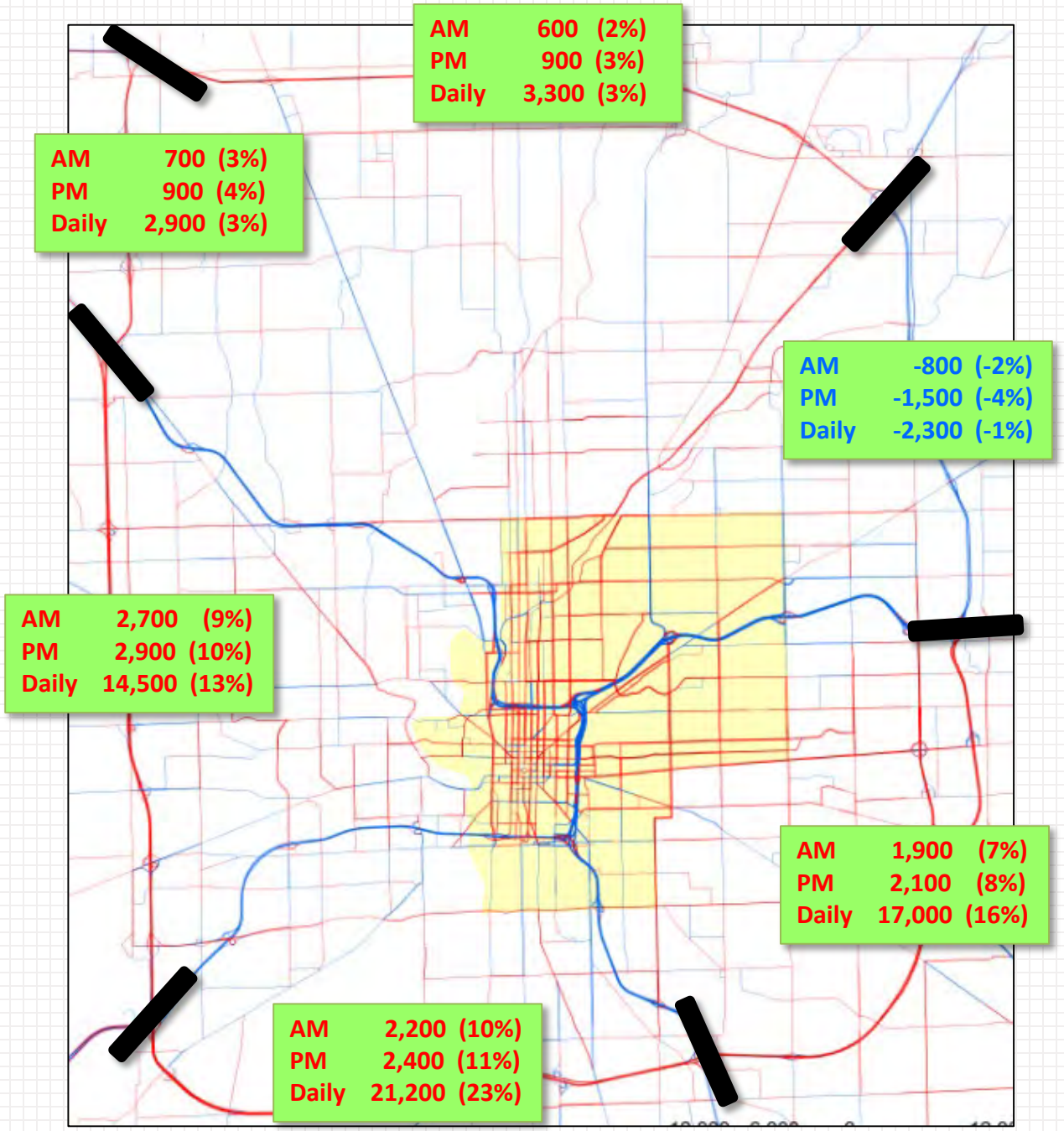

Source: Indy MPO 2016 Model (AM = 6-9am, PM = 3-6pm)

I-465 Volume/Capacity Ratio

Existing Condition (AM)

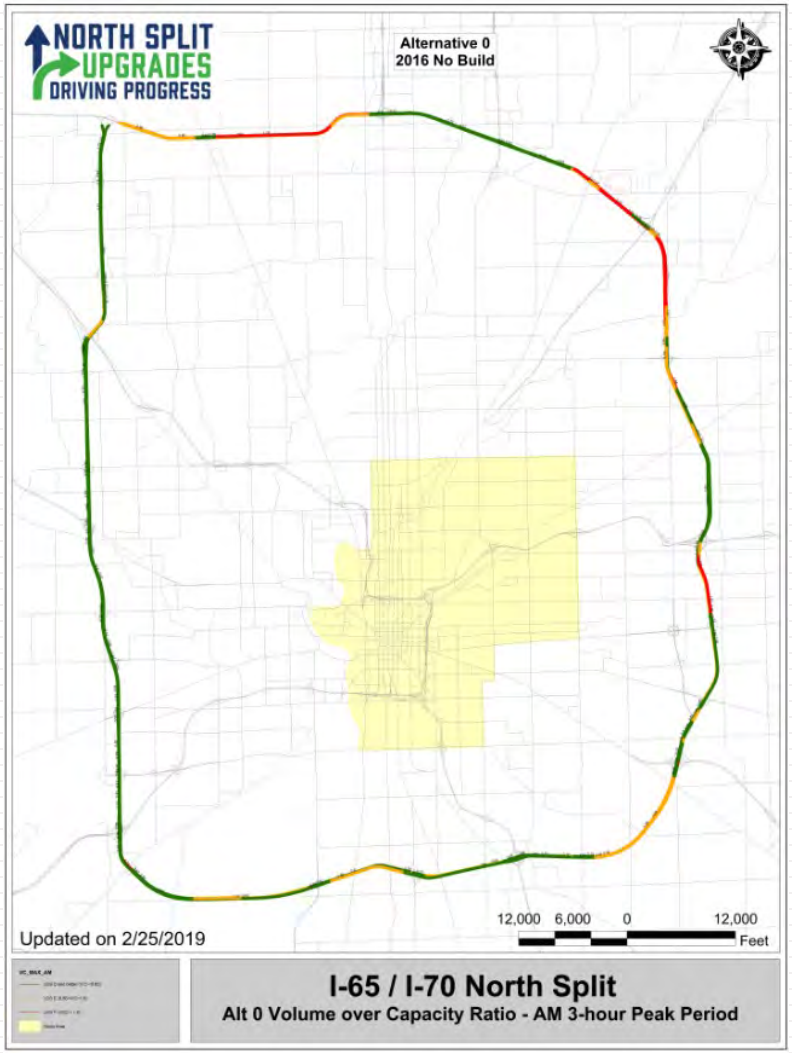

North Split Full Closure (AM)
(I-70 WB to I-65 NB ramp open)

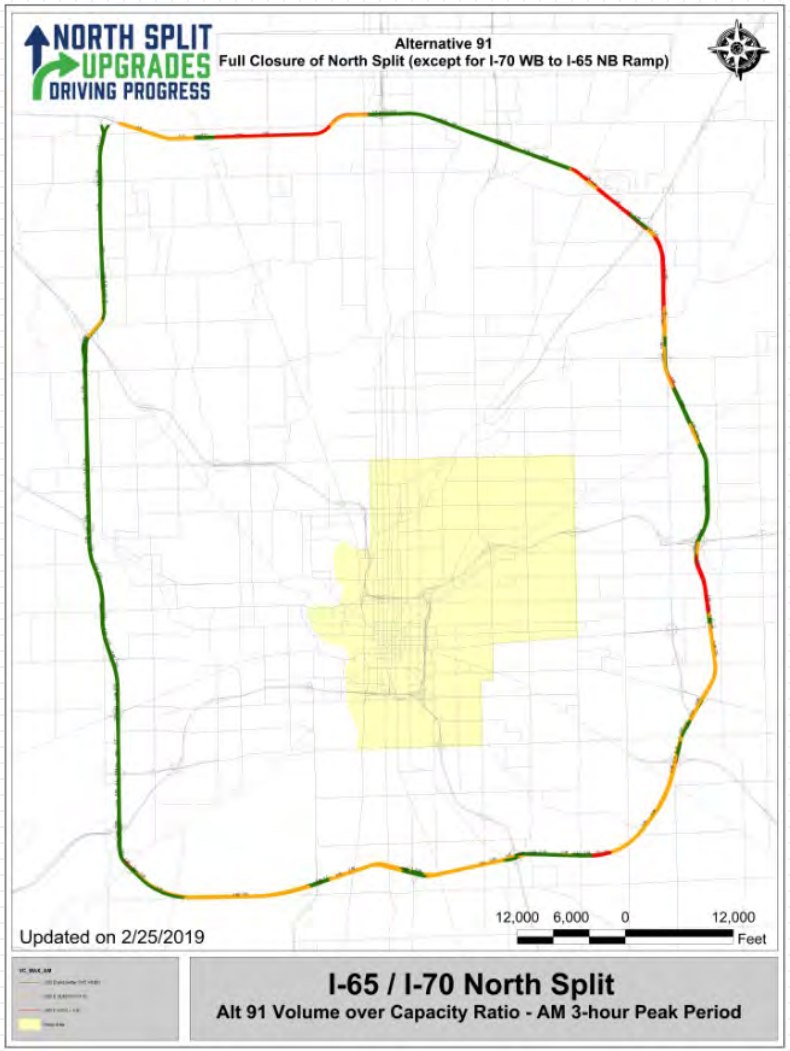

Source: Indy MPO 2016 Model (AM = 6-9am, PM = 3-6pm)

I-465 Volume/Capacity Ratio

Existing Condition (PM)

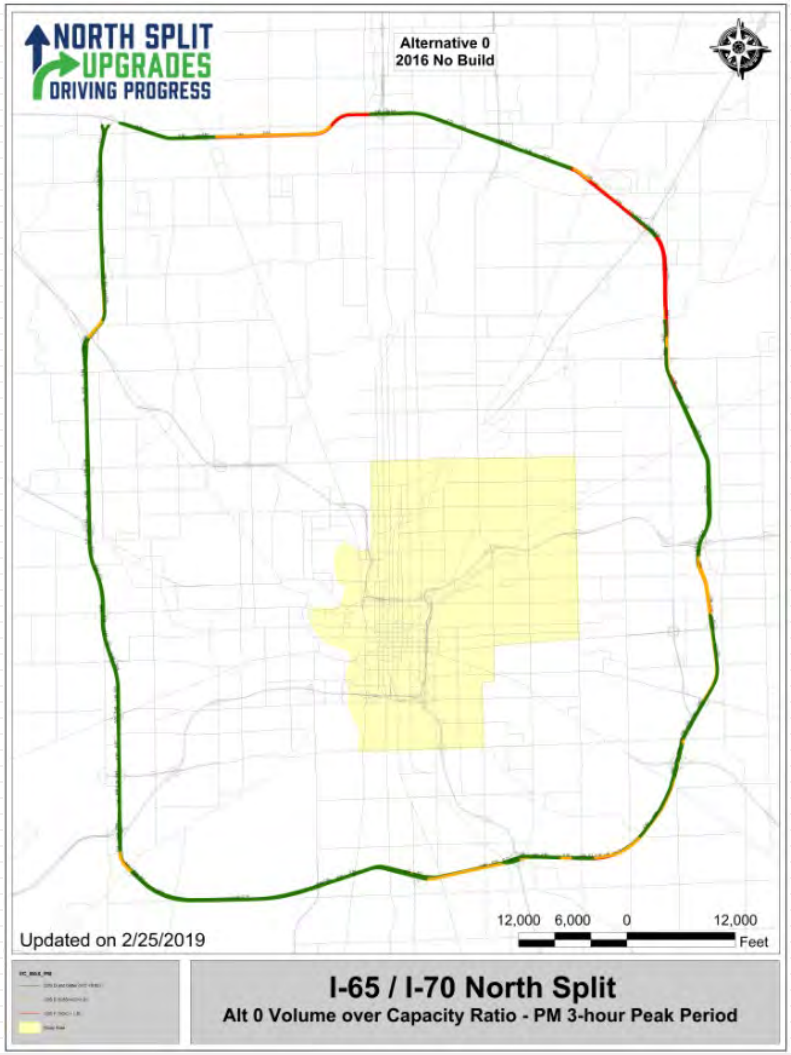

North Split Full Closure (PM)
(I-70 WB to I-65 NB ramp open)

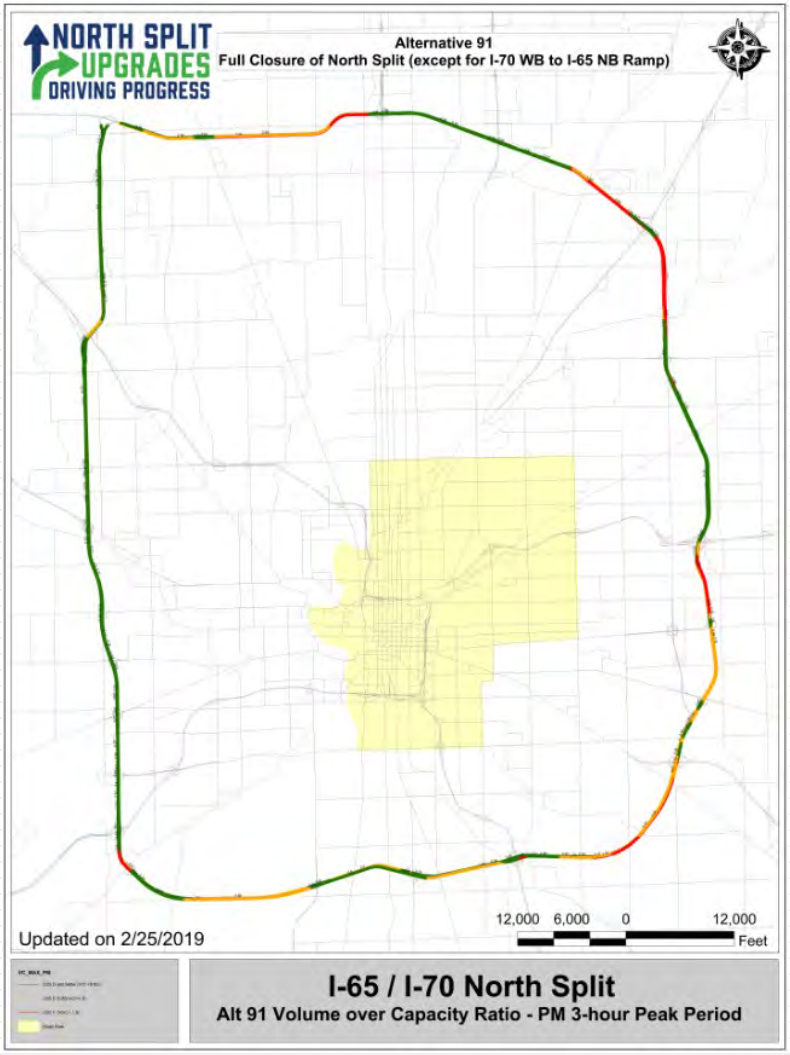

Source: Indy MPO 2016 Model (AM = 6-9am, PM = 3-6pm)

North Split MOT Traffic Diversion

North Split Full Closure
(while keeping I-70 WB to I-65 NB ramp open)

vs.

Existing Condition

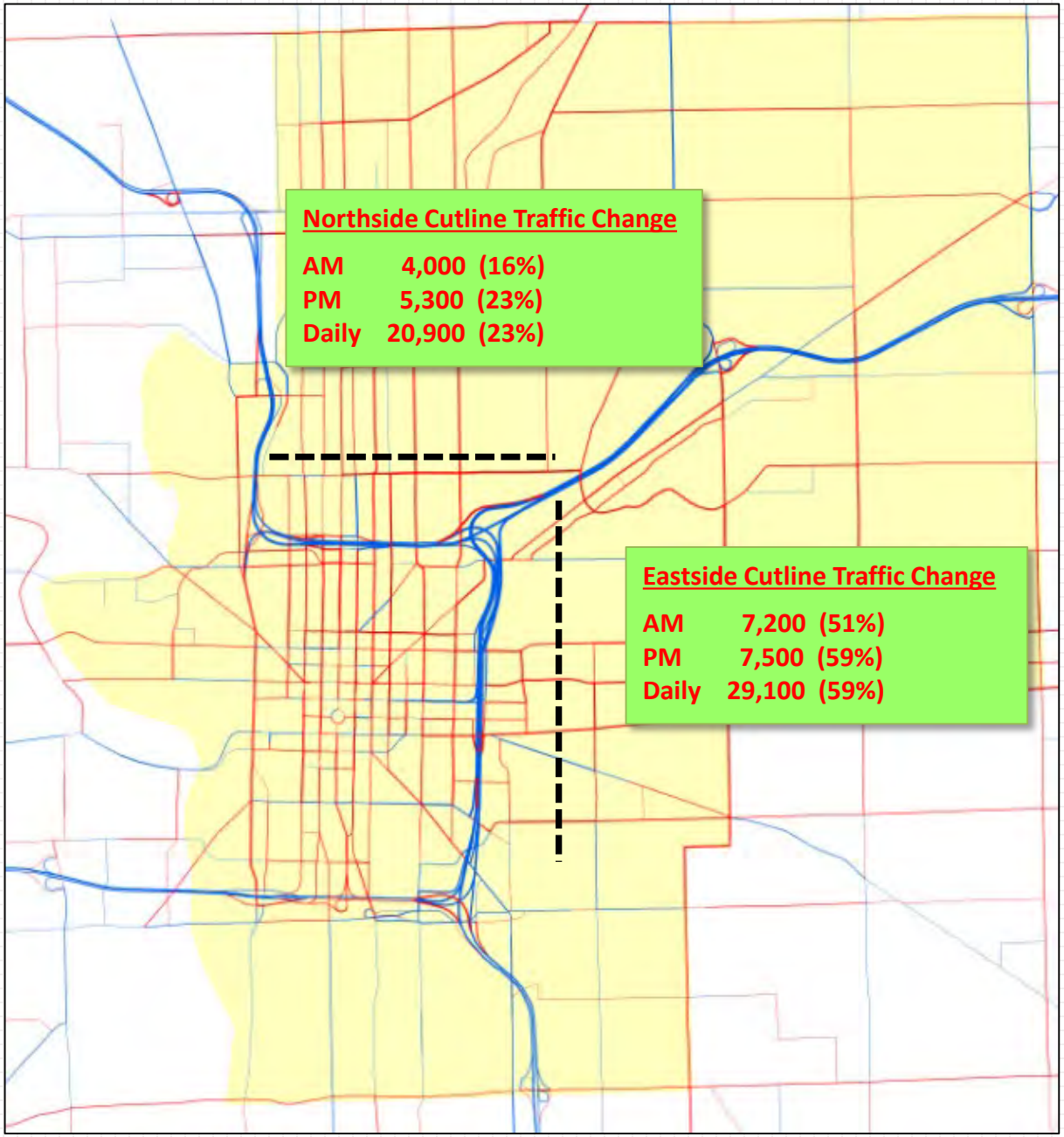

Source: Indy MPO 2016 Model (AM = 6-9am, PM = 3-6pm)

3. North Split Full Closure

(while keeping CD roads open)

North Split MOT Traffic Diversion

North Split Full Closure
(while keeping CD open)

vs.

Existing Condition

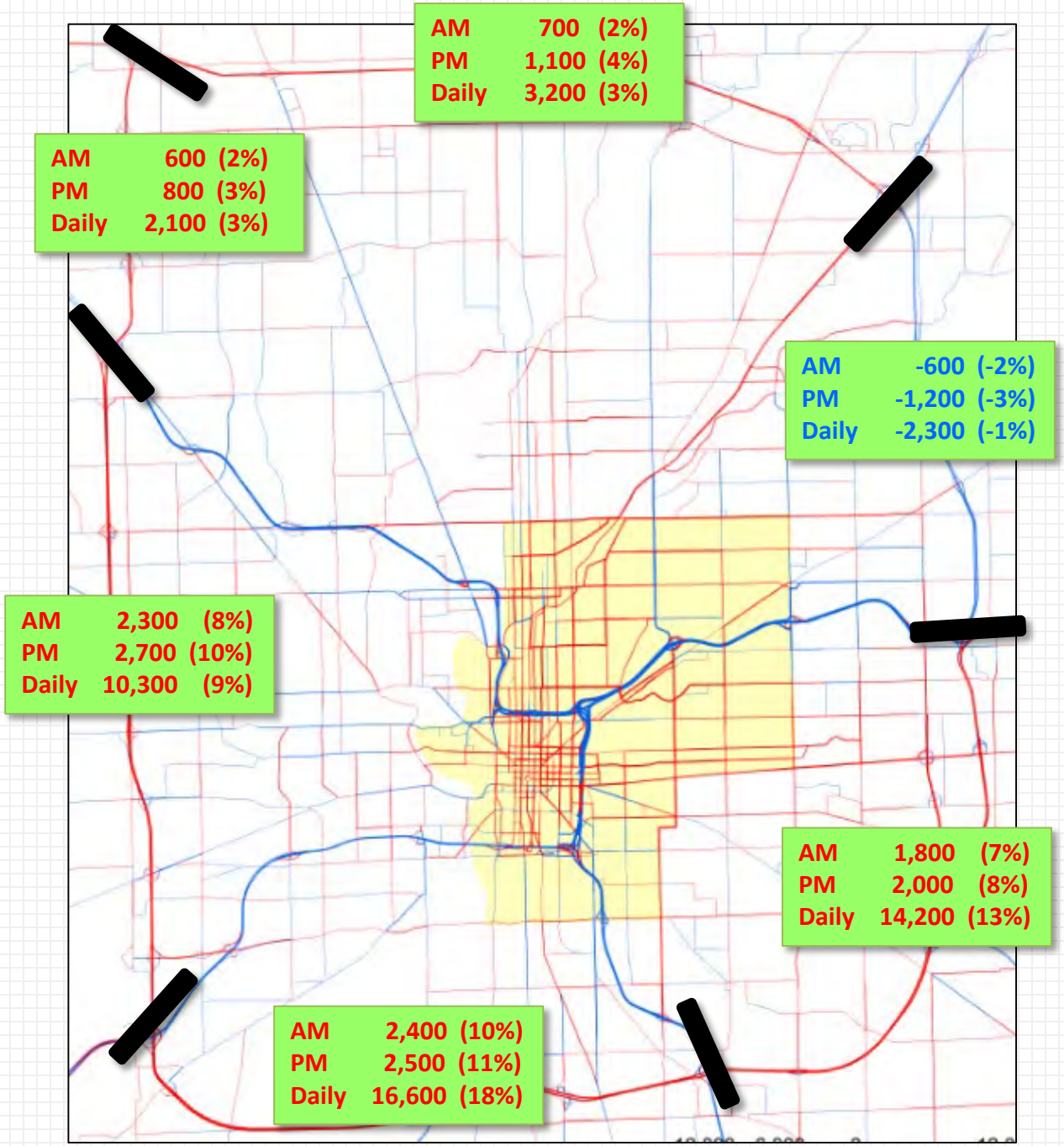

Source: Indy MPO 2016 Model (AM = 6-9am, PM = 3-6pm)

I-465 Volume/Capacity Ratio

Existing Condition (AM)

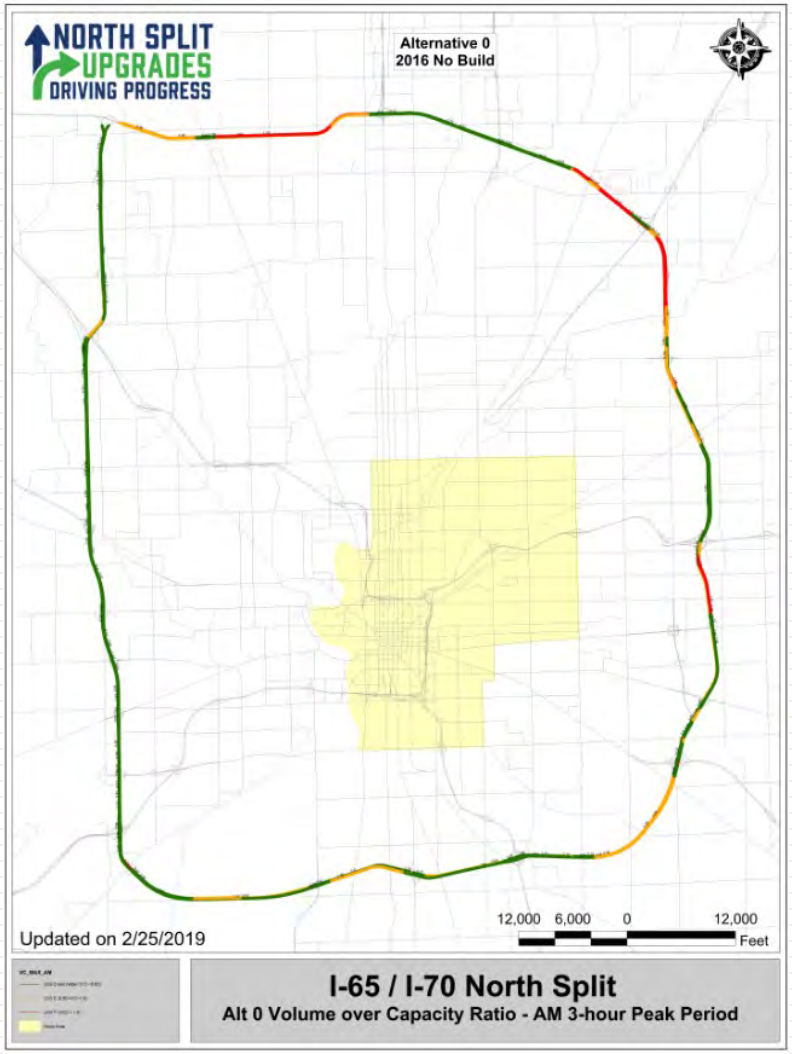

North Split Full Closure (AM)
(CD open)

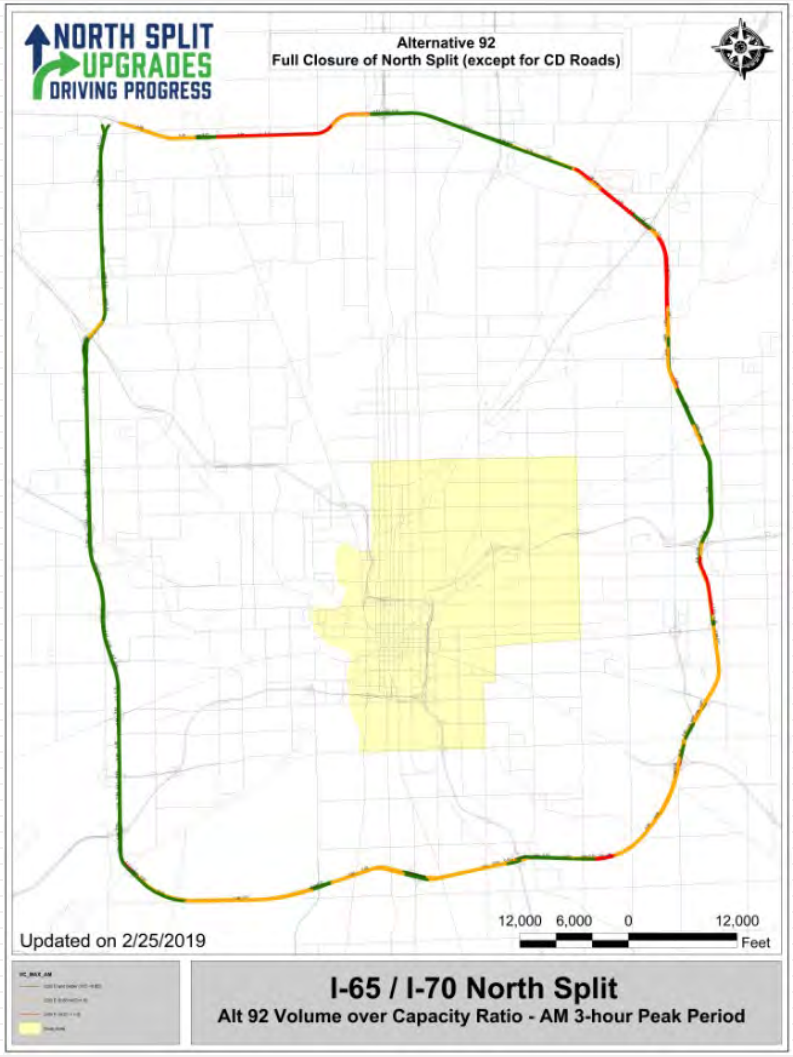

Source: Indy MPO 2016 Model (AM = 6-9am, PM = 3-6pm)

I-465 Volume/Capacity Ratio

Existing Condition (PM)

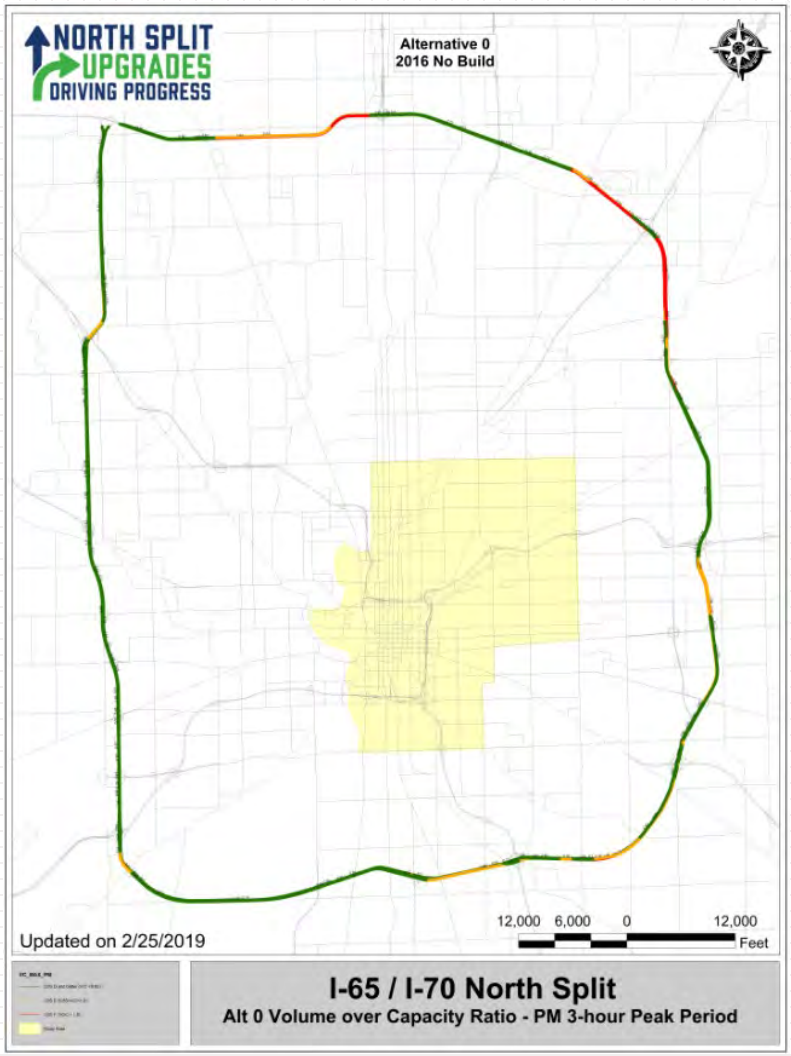

North Split Full Closure (PM)
(CD open)

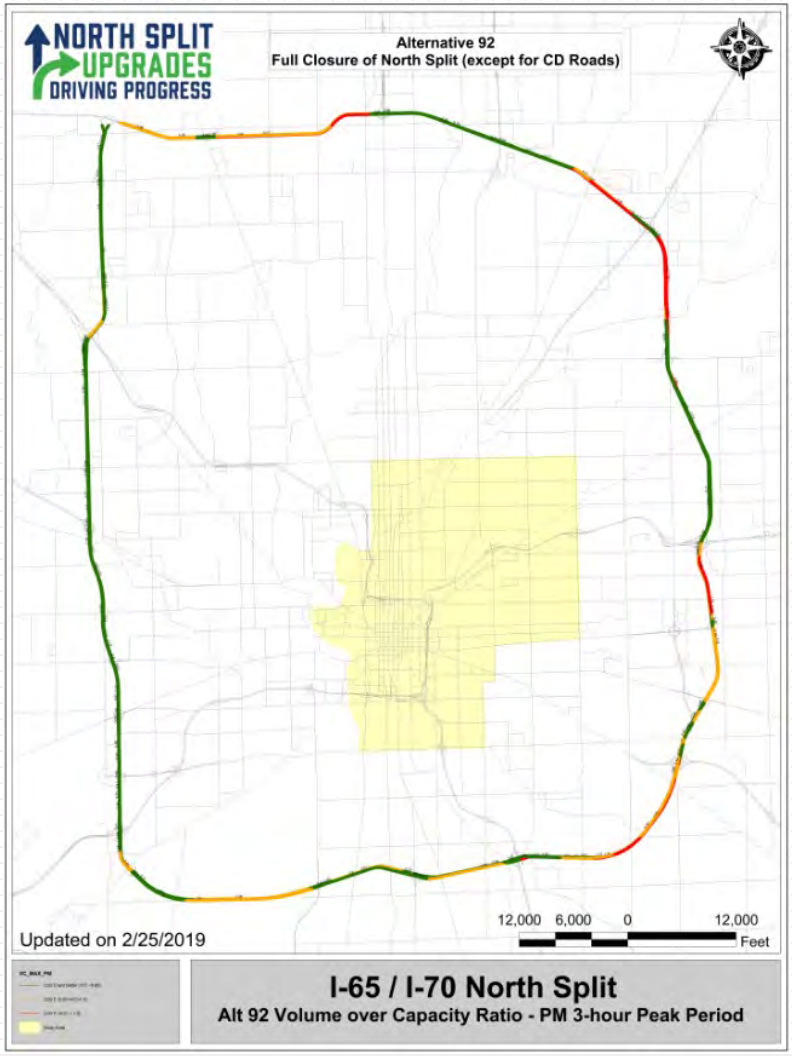

Source: Indy MPO 2016 Model (AM = 6-9am, PM = 3-6pm)

North Split MOT Traffic Diversion

North Split Full Closure
(while keeping CD open)

vs.

Existing Condition

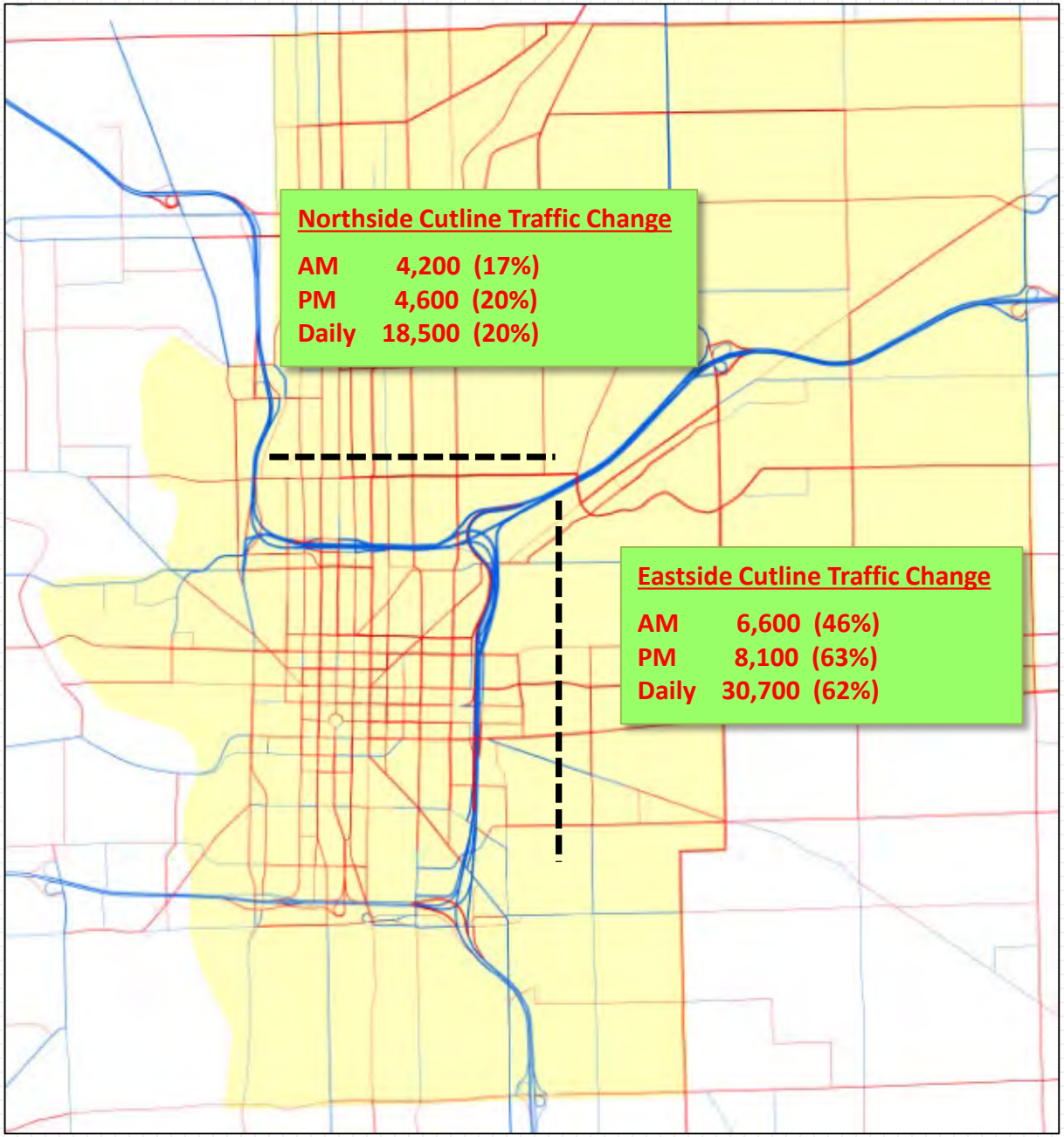

Source: Indy MPO 2016 Model (AM = 6-9am, PM = 3-6pm)

Attachment H

MOT Preliminary Modeling Analysis

I-65/I-70 North Split

MOT Preliminary Modeling Analysis Review

INDOT

HNTB

Corradino

April 25, 2019

Master Scenarios for MOT Modeling

- **2021 Base (No Build)**
- **2021 Phase 1.** Close North Split except for:
  - I-70 WB to I-65 NB
  - I-70 WB to I-65/I-70 SB CD (to Michigan St)
  - I-65 SB to I-70 EB
  - Pine St to I-70 EB on-ramp
- **2022 Phase 1.** Close North Split except for:
  - I-70 WB to I-65 NB
  - I-70 WB to I-65/I-70 SB CD (to Michigan St)
  - Pine St to I-70 EB on-ramp

  Short-term Closure
  - I-65 SB to I-70 EB
  - Penn St off-ramp & Delaware on-ramp

MOT Traffic Diversion

2021 No Build vs. 2021 Phase 1
AM Peak Hour, DTA

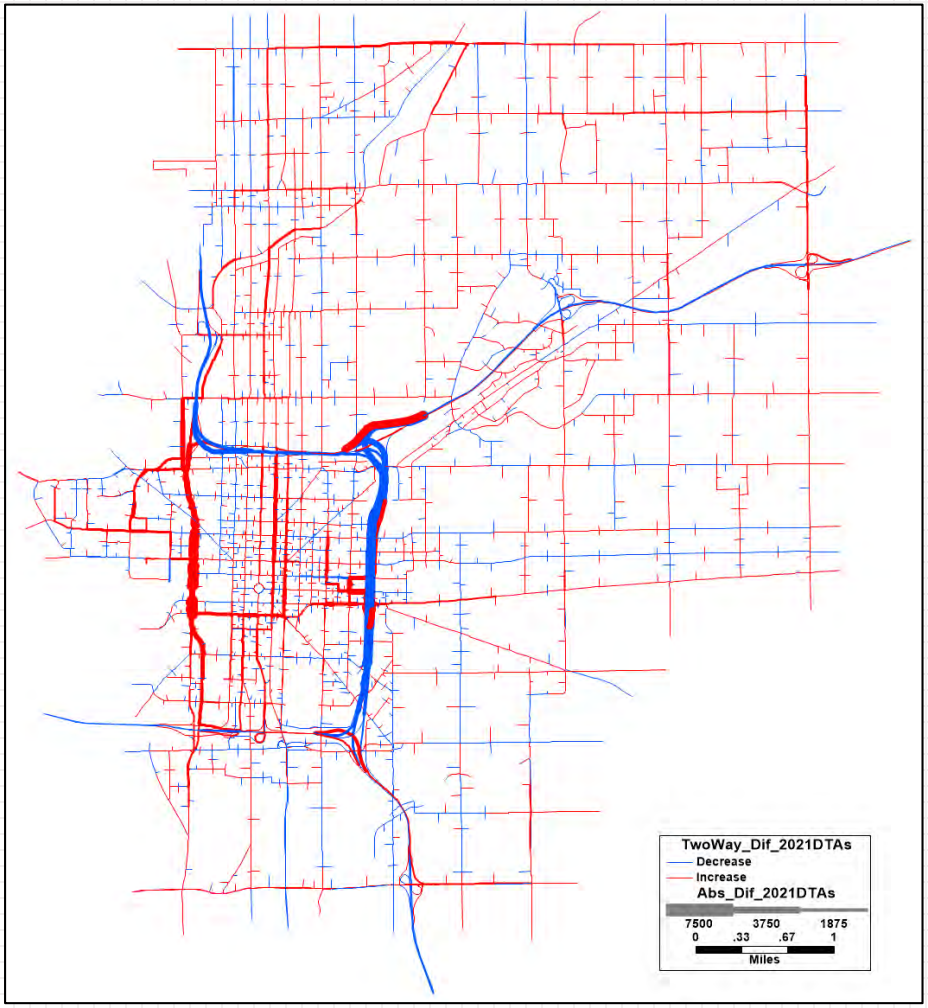

2021 No Build vs. 2021 Phase 1
PM Peak Hour, DTA

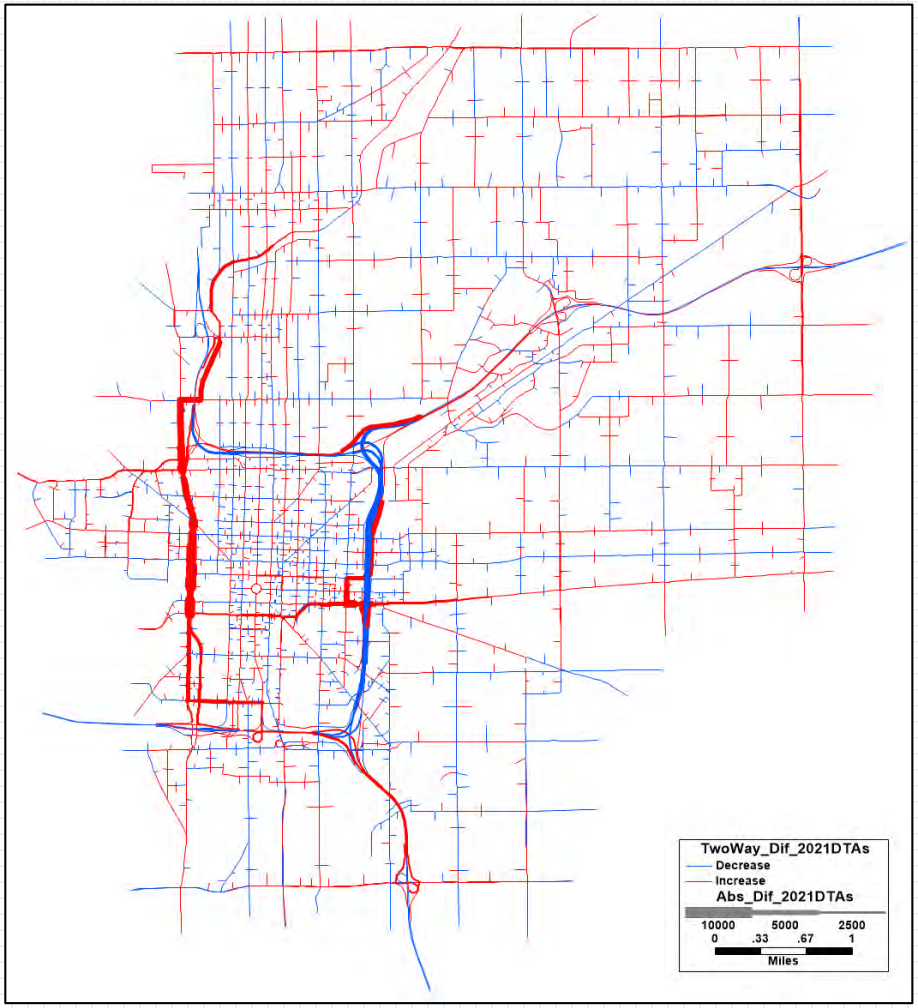

MOT Traffic Diversion

2021 No Build vs. 2022 Phase 1
AM Peak Hour, DTA

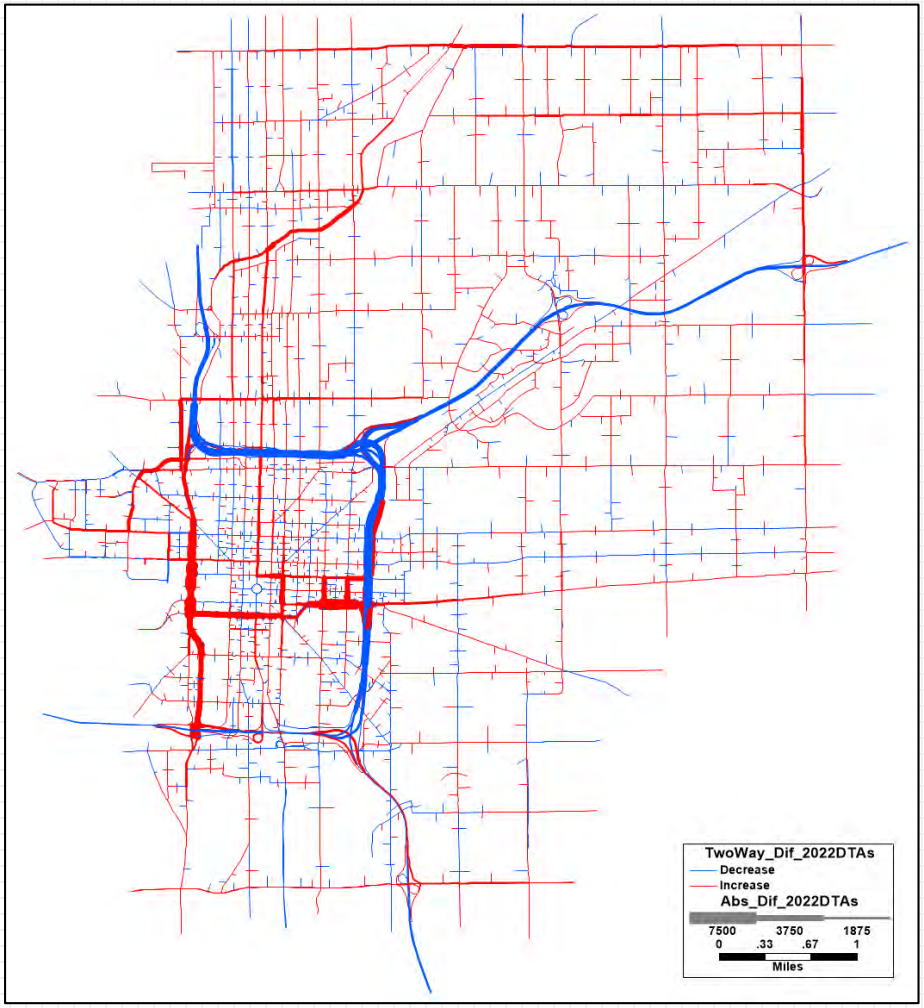
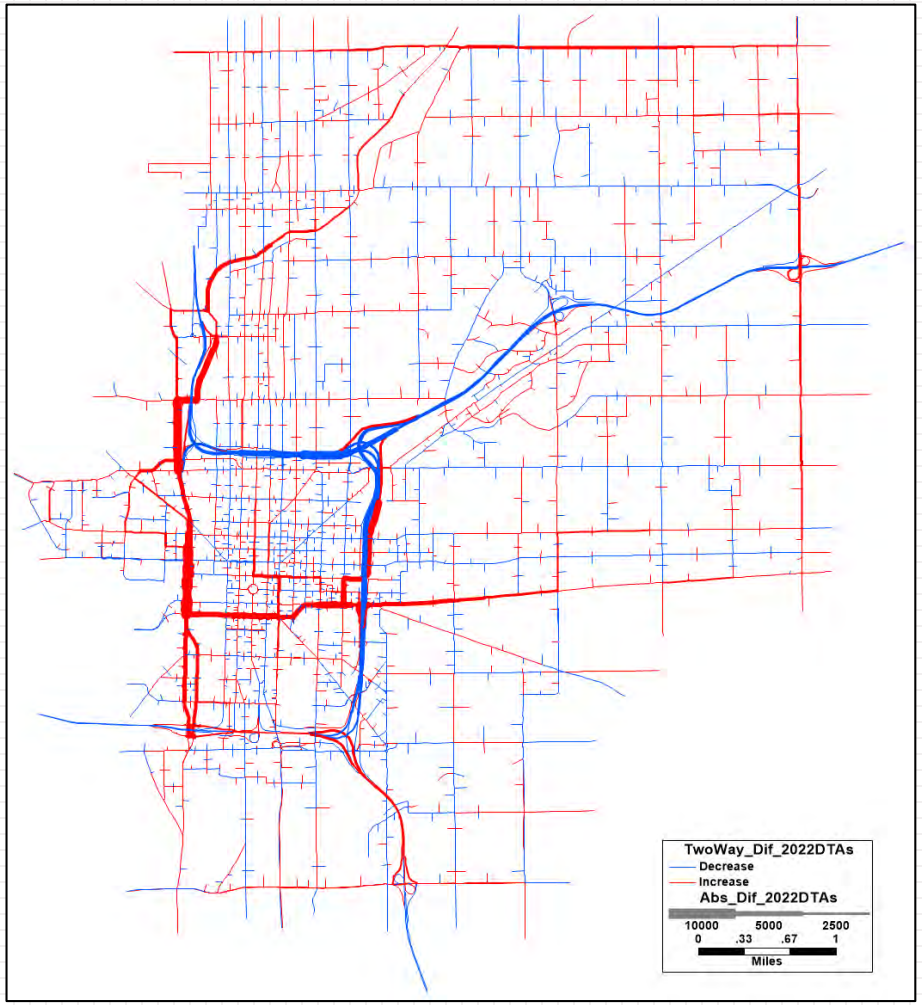
2021 No Build vs. 2022 Phase 1
PM Peak Hour, DTA