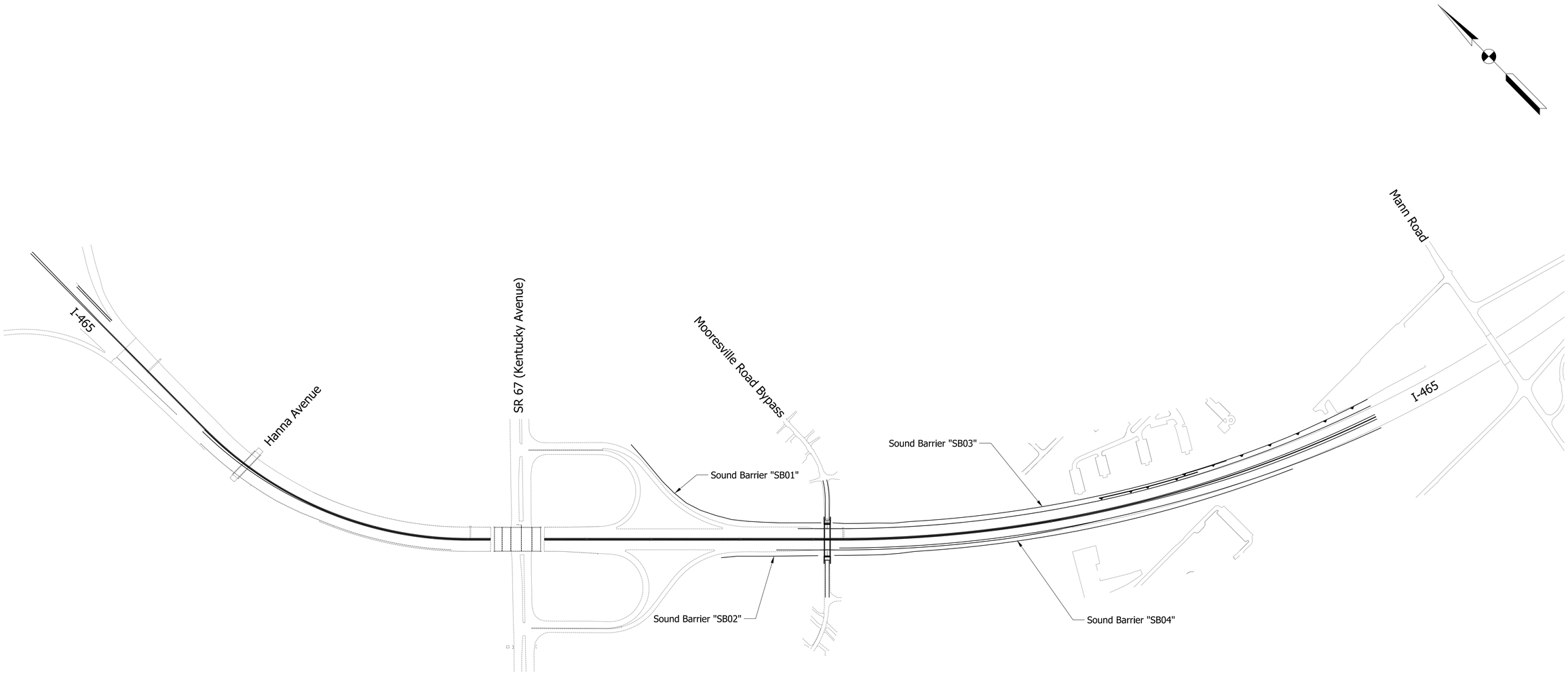

INDIANA
DEPARTMENT OF TRANSPORTATION

SOUND BARRIER KEYMAP
SEGMENT A

IP_PWP:dms32501\I-465_Reconfigure_Structures Keymap C.dgn

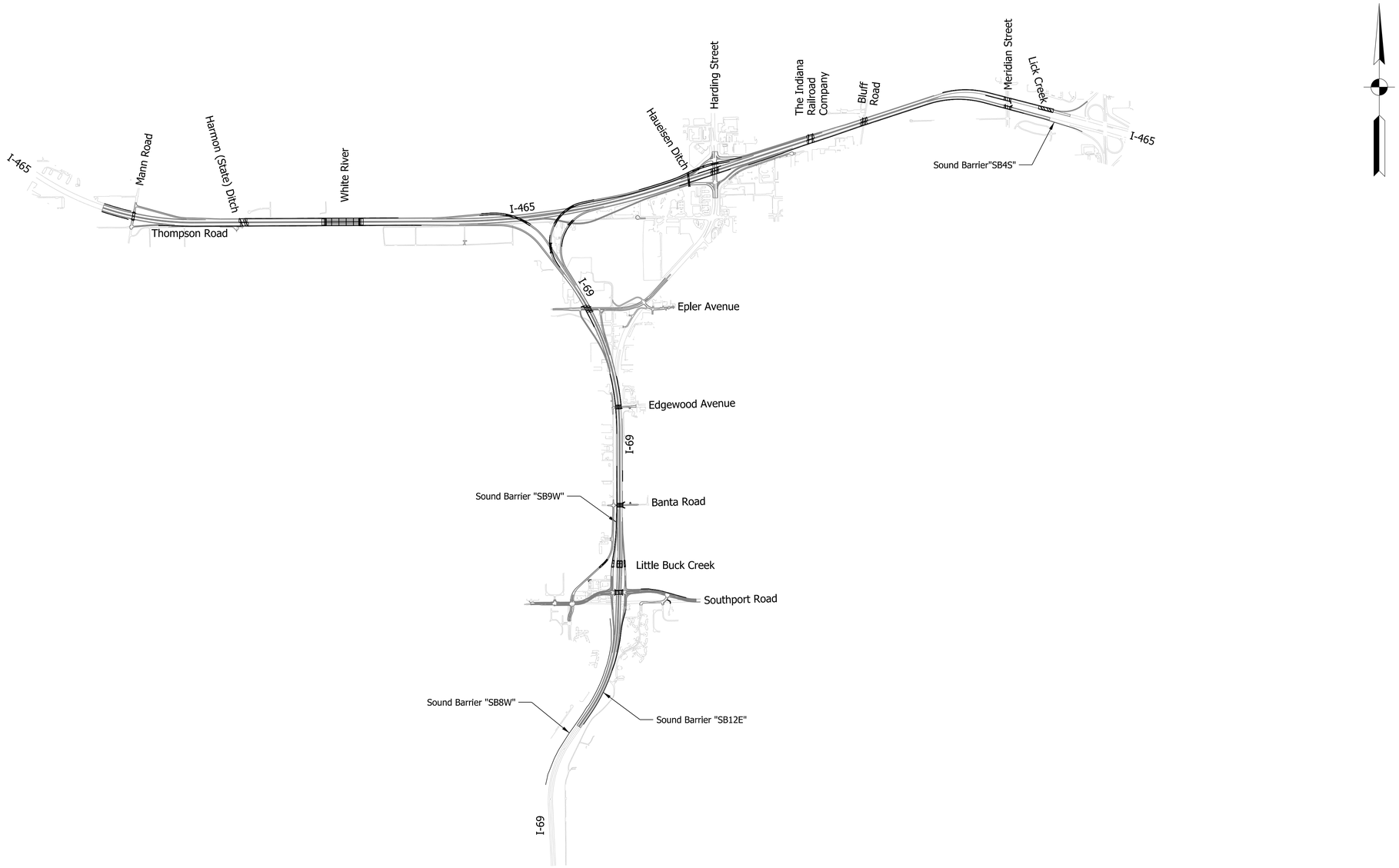

INDIANA
DEPARTMENT OF TRANSPORTATION

SOUND BARRIER KEYMAP
SEGMENTS B & D

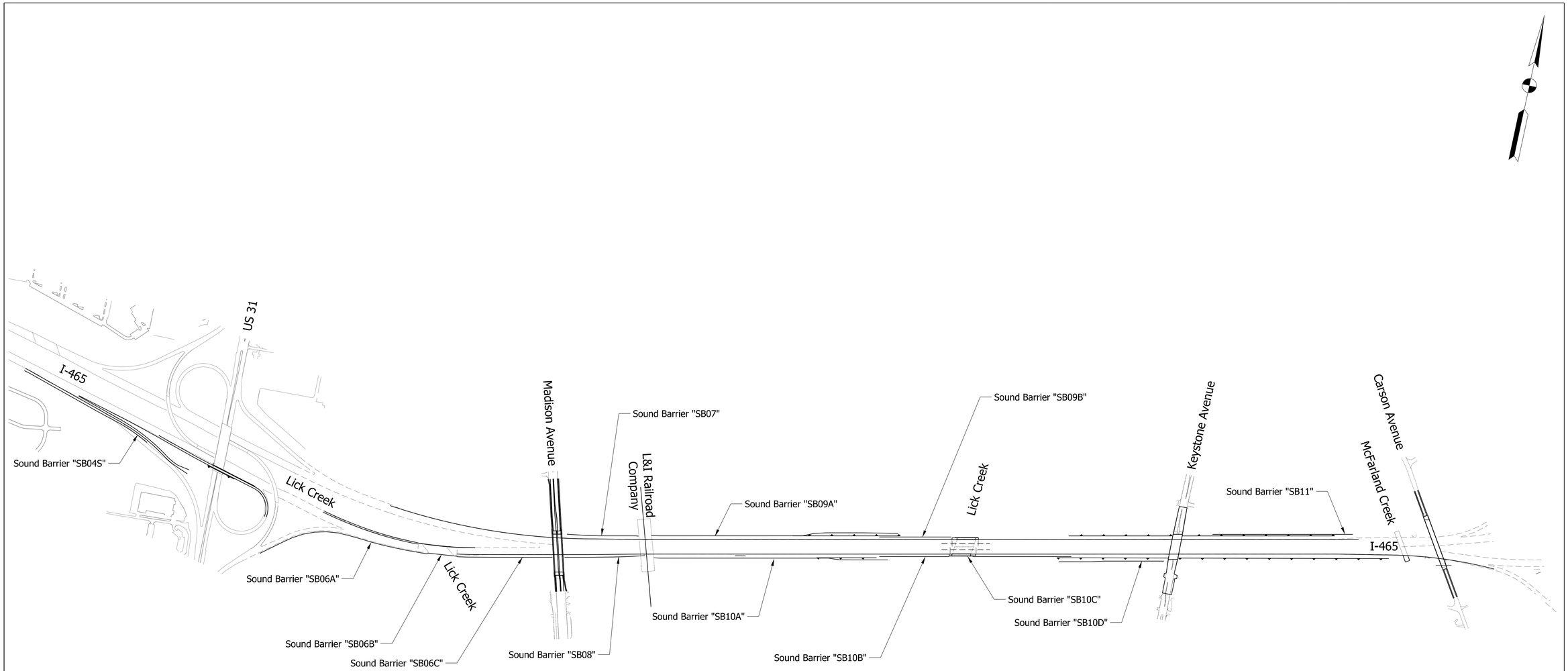

INDIANA
DEPARTMENT OF TRANSPORTATION

SOUND BARRIER KEYMAP
SEGMENT C

IP_PWP:dms32501\I-465_Reconfigure_Structure Keymap A&B.dgn

TABLE 1: Existing Freeway (Partial Reconstruction 4R), Project: Project: I-69 Section 6 Contract 5 Segments A & C

INDOT (des.) #1802075

Date Updated: 08/22/2019 By: CWB

	DESIGN CRITERIA	MANUAL SECTION (2013 IDM - English)	PROJECT-SPECIFIC CRITERIA DEFINITION
DESIGN CONTROLS	**Functional Classification**		Freeway, Partial 3R (Urban Interstate)
	INDOT Geometric Design Table	Chp. 54	Table 54-2A
	Design Year Traffic, AADT	40-2.02	134,550
	Design Vehicle	Fig. 46-1E	WB-65
	***Design Speed, MPH**	Fig. 54-2A	70 mph
	Access Control	Fig. 54-2A	Full Control
	Level of Service	Fig. 54-2A	Desirable: B; Minimum: D
CROSS SECTION ELEMENTS	**Travel Lane**		
	***Width**	54-3.03	12 ft
	Typical Surface Type	Ch. 52	Asphalt
	Shoulder		
	***Right Width Usable**	54-3.03	13 ft
	***Right Width Paved**	54-3.03	12 ft
	***Left Width Usable**	54-3.03	13 ft
	***Left Width Paved**	54-3.03	12 ft
	with Guardrail\Barrier	49-5.0	14 ft LT/14 ft RT
	Typical Surface Type	Ch. 52	Asphalt
	Cross Slope		
	***Travel Lane**	45-1.01	2%
	Shoulder	45-1.02	4%
	Auxiliary Lanes		
	Lane Width	45-1.03	12 ft
	Shoulder Width	45-1.03	14 ft
	Median Width	54-3.03	Paved with median barrier: 12 ft to 26 ft Grass Median: 60 ft to 186 ft
	Clear Zone Width	49-2.0	30 ft
	Side Slopes		
	Cut Foreslope	54-3.03	2:1
	Cut Ditch Width	54-3.03	N/A
	Cut Backslope	54-3.03	2:1
	Fill	45-3.0	2:1
	Median Slopes	45-3.03	N/A
BRIDGES	**New and Reconstructed Bridges**		
	***Structural Capacity**	Chp. 60	HL-93
	***Clear Roadway Width**	54-5.0	Full Paved Approach Width
	Existing Bridges to Remain in Place		
	***Structural Capacity**	Chp. 72	HS-20
	***Clear Roadway Width**	54-5.0	Travelway Plus 10 ft Rt. & 4 ft Lt. Shoulders
	***Vertical Clearance (Freeway Under)**		
	New and Replaced Overpassing Bridge	54-5.0	16.5 ft
	Existing Overpassing Bridge	54-5.0	16 ft
	Sign Truss/Pedestrian Bridge	54-5.0	17 ft to 18 ft
	Freeway over Railroad	Chp. 69	Existing
ALIGNMENT ELEMENTS	***Stopping Sight Distance**	Fig. 54-2A	730 ft
	Decision Sight Distance	42-2.0	
	Speed/path/direction change	42-2.0	1445 ft
	Stop Manuever	42-2.0	1410 ft
	Passing Sight Distance	42-3.0	N/A
	Intersection Sight Distance, -3% to +3%	42-4.0	N/A
	***Minimum Radius, e=8%**	43-2.0	Existing
	***Superelevation Rate**	43-3.0	e_{max}= 8%
	***Horizontal Sight Distance**	43-4.0	730 ft
	***Vertical Curvature, K-value**		
	Crest	44-3.0	Existing
	Sag	44-3.0	Existing
	Vertical Grades		
	***Maximum**	Fig. 54-2A	3-5% Up 4-6% Down
	Minimum	54-3.02	Desirable: 0.5%, Minimum: 0.30%

* Indicates Level One controlling design criteria. A deviation from such is a design exception, and is subject to approval. See section 40-8.0

TABLE 1: Existing Freeway (Partial Reconstruction 4R), Project: Project: I-69 Section 6 Contract 5 Segments A & C (US 31 Interchange)

INDOT (des.) #1802075

Date Updated: 08/22/2019 By: CWB

	DESIGN CRITERIA	MANUAL SECTION (2013 IDM - English)	PROJECT-SPECIFIC CRITERIA DEFINITION
DESIGN CONTRO	**Functional Classification**		Freeway, Partial 4R (Urban Ramp)
	INDOT Geometric Design Table	Chp. 54	Table 54-2A
	Design Year Traffic, AADT	40-2.01	5,882 (2045)
	Design Vehicle	Fig. 46-1E	WB-62
	***Design Speed, MPH**	Fig. 48-5A	25-60 mph
INTERCHANGE ELEMENTS	**Traveled Way**		
	Width	48-5.02	16 ft
	Typical Surface Type	Ch. 52	Exist = PCCP
	Shoulder		
	***Right Width Usable**	48-5.02	9 ft
	***Right Width Paved**	48-5.02	8 ft
	***Left Width Usable**	48-5.02	5 ft
	***Left Width Paved**	48-5.02	4 ft
	with Guardrail\Barrier	49-5.0	10 ft LT/6 ft RT
	Typical Surface Type	Ch. 52	Exist = PCCP
	Cross Slope		
	***Travel Lane**	48-5.02	2%
	Shoulder	48-5.02	Right: 4%; Left: 2%
	Superelevation	48-5.03	e_{max}= 8%
	Vertical Grades Maximum		
	Upgrade	48-5.04	5%
	Downgrade	48-5.04	6%

* Indicates Level One controlling design criteria. A deviation from such is a design exception, and is subject to approval. See section 40-8.0

TABLE 1: Minor Arterial (3R, Non-Freeway), Project:
Project: I-69 Section 6 Contract 5 Segment C (Madison Avenue)

INDOT (des.) #1802075

Date Updated: 08/22/2019 By: CWB

	DESIGN CRITERIA	MANUAL SECTION (2013 IDM - English)	PROJECT-SPECIFIC CRITERIA DEFINITION
DESIGN CONTROLS	**Functional Classification**		Non-Freeway, 3R (Urban Arterial, 4 or more lanes)
	INDOT Geometric Design Table	Chp. 55	Table 55-3E (Suburban)
	Design Year Traffic, AADT	55-4.01	26,157 (2045)
	Design Vehicle	Fig. 46-1E	WB-62
	***Design Speed, MPH**	Fig. 55-3E	Posted Speed Limit (40 mph)
	Access Control	Fig. 55-3E	None
	Level of Service	Fig. 55-3E	Desirable: C; Minimum: D
CROSS SECTION ELEMENTS	**Travel Lane**		
	***Width**	55-4.05	Curbed: 12 ft Uncurbed: 12 ft
	Typical Surface Type	Ch. 52	Asphalt
	***Curb Offset**	55-4.05	1 ft
	Shoulder		
	***Right Width Paved**	55-4.05	Uncurbed: 10 ft
	***Left Width Paved**	55-4.05	Curbed: 1 ft
	with Guardrail\Barrier	55-4.05	Paved shoulder width + 2 ft
	Typical Surface Type	Ch. 52	Asphalt
	Cross Slope		
	***Travel Lane**	55-4.05	2%
	Shoulder	55-4.05	2%; 4% w/guardrail
	Auxiliary Lanes		
	Lane Width	55-4.05	N/A
	Shoulder Width	55-4.05	N/A
	TWLTL Width	46-5.0	16 ft
	Median Width (Raised Island)	55-4.05	10 ft
	Obstruction Free Zone Width	55-5.02	10 ft + min. paved shldr width
	Side Slopes		
	Cut Foreslope	55-4.05	2:1
	Cut Ditch Width	55-4.05	Existing
	Cut Backslope	55-4.05	2:1
	Fill	55-4.05	2:1
	Median Slopes, Depressed	55-4.05	N/A
BRIDGES	**New and Reconstructed Bridges**		
	***Structural Capacity**	Chp. 403	HL-93
	***Clear Roadway Width**	55-6.03	Uncurbed: Full approach width
	Existing Bridges to Remain in Place		
	***Structural Capacity**	Chp. 72	HS-20
	***Clear Roadway Width**	55-6.02	Uncurbed: Uncurbed: Travelway plus 2 ft on each side
	***Vertical Clearance (Arterial Under)**		
	New and Replaced Overpassing Bridge	55-6.0	16.5 ft
	Existing Overpassing Bridge	55-6.0	14 ft
	Sign Truss/Pedestrian Bridge	55-6.0	N/A
	Arterial over Railroad	Ch. 402-6.01	Existing
ALIGNMENT ELEMENTS	***Stopping Sight Distance**	Fig. 42-1A	305 ft
	Decision Sight Distance	42-2.0	
	Speed/path/direction change	42-2.0	825 ft
	Stop Manuever	42-2.0	690 ft
	Passing Sight Distance	42-3.0	1470 FT
	Intersection Sight Distance, -3% to +3%	46-10.0	P: 440 ft SUT: 560 ft
	***Minimum Radius, e=6%**	Fig. 43-2B	485 ft
	***Superelevation Rate**	43-3.0	e_{max}= 6%
	***Horizontal Sight Distance**	43-4.0	305 ft
	***Vertical Curvature, K-value**		
	Crest	44-3.0	Existing
	Sag	Fig. 55-4A	35
	Vertical Grades		
	***Maximum**	55-4.0	Level: 8.5%
	Minimum	44-1.03	Curbed Des: 0.5%, Curbed Min: 0.3%, Uncurbed: 0%

* Indicates Level One controlling design criteria. A deviation from such is a design exception, and is subject to approval. See section 40-8.0

TABLE 1: Minor Arterial (3R, Non-Freeway), Project:
Project: I-69 Section 6 Contract 5 Segment C (Keystone Avenue)

INDOT (des.) #1802075

Date Updated: 08/22/2019 By: CWB

	DESIGN CRITERIA	MANUAL SECTION (2013 IDM - English)	PROJECT-SPECIFIC CRITERIA DEFINITION
DESIGN CONTROLS	**Functional Classification**		Non-Freeway, 3R (Urban Arterial, 4 or more lanes)
	INDOT Geometric Design Table	Chp. 55	Table 55-3E (Suburban)
	Design Year Traffic, AADT	55-4.01	9,436 (2045)
	Design Vehicle	Fig. 46-1E	WB-62
	***Design Speed, MPH**	Fig. 55-3E	Posted Speed Limit (40 mph)
	Access Control	Fig. 55-3E	None
	Level of Service	Fig. 55-3E	Desirable: C; Minimum: D
CROSS SECTION ELEMENTS	**Travel Lane**		
	***Width**	55-4.05	Curbed: 11 ft Uncurbed: 11 ft
	Typical Surface Type	Ch. 52	Asphalt
	***Curb Offset**	55-4.05	1 ft
	Shoulder		
	***Right Width Paved**	55-4.05	Uncurbed: 10 ft
	***Left Width Paved**	55-4.05	Curbed: 1 ft
	with Guardrail\Barrier	55-4.05	Paved shoulder width + 2 ft
	Typical Surface Type	Ch. 52	Asphalt
	Cross Slope		
	***Travel Lane**	55-4.05	2%
	Shoulder	55-4.05	2%; 4% w/guardrail
	Auxiliary Lanes		
	Lane Width	55-4.05	10 ft
	Shoulder Width	55-4.05	N/A
	TWLTL Width	46-5.0	16 ft
	Median Width (Raised Island)	55-4.05	10 ft
	Obstruction Free Zone Width	55-5.02	10 ft + min. paved shldr width
	Side Slopes		
	Cut Foreslope	55-4.05	2:1
	Cut Ditch Width	55-4.05	Existing
	Cut Backslope	55-4.05	2:1
	Fill	55-4.05	2:1
	Median Slopes, Depressed	55-4.05	N/A
BRIDGES	**New and Reconstructed Bridges**		
	***Structural Capacity**	Chp. 403	HL-93
	***Clear Roadway Width**	55-6.03	Uncurbed: Full approach width
	Existing Bridges to Remain in Place		
	***Structural Capacity**	Chp. 72	HS-20
	***Clear Roadway Width**	55-6.02	Uncurbed: Uncurbed: Travelway plus 2 ft on each side
	***Vertical Clearance (Arterial Under)**		
	New and Replaced Overpassing Bridge	55-6.0	16.5 ft
	Existing Overpassing Bridge	55-6.0	14 ft
	Sign Truss/Pedestrian Bridge	55-6.0	N/A
	Arterial over Railroad	Ch. 402-6.01	Existing
ALIGNMENT ELEMENTS	***Stopping Sight Distance**	Fig. 42-1A	305 ft
	Decision Sight Distance	42-2.0	
	Speed/path/direction change	42-2.0	825 ft
	Stop Manuever	42-2.0	690 ft
	Passing Sight Distance	42-3.0	1470 FT
	Intersection Sight Distance, -3% to +3%	46-10.0	P: 440 ft SUT: 560 ft
	***Minimum Radius, e=6%**	Fig. 43-2B	485 ft
	***Superelevation Rate**	43-3.0	e_{max}= 6%
	***Horizontal Sight Distance**	43-4.0	305 ft
	***Vertical Curvature, K-value**		
	Crest	44-3.0	Existing
	Sag	Fig. 55-4A	35
	Vertical Grades		
	***Maximum**	55-4.0	Level: 8.5%
	Minimum	44-1.03	Curbed Des: 0.5%, Curbed Min: 0.3%, Uncurbed: 0%

* Indicates Level One controlling design criteria. A deviation from such is a design exception, and is subject to approval. See section 40-8.0

TABLE 1: Minor Arterial (3R, Non-Freeway), Project:
Project: I-69 Section 6 Contract 5 Segment C (Carson Avenue)

INDOT (des.) #1802075

Date Updated: 08/22/2019 By: CWB

	DESIGN CRITERIA	MANUAL SECTION (2013 IDM - English)	PROJECT-SPECIFIC CRITERIA DEFINITION
DESIGN CONTROLS	**Functional Classification**		Non-Freeway, 3R (Urban Arterial, 2 or more lanes)
	INDOT Geometric Design Table	Chp. 55	Table 55-3F
	Design Year Traffic, AADT	55-4.01	5,486 (2045)
	Design Vehicle	Fig. 46-1E	WB-62
	***Design Speed, MPH**	Fig. 55-3F	Posted Speed Limit (35 mph)
	Access Control	Fig. 55-3F	Partial Control/None
	Level of Service	Fig. 55-3F	Desirable: B; Minimum: D
CROSS SECTION ELEMENTS	**Travel Lane**		
	***Width**	55-4.05	Curbed: 12 ft Uncurbed: 12 ft
	Typical Surface Type	Ch. 52	Asphalt
	***Curb Offset**	55-4.05	1 ft
	Shoulder		
	***Paved Width**	55-4.05	Curbed Des: 10 ft; Min. 1 ft Uncurbeb Des: 10 ft; Min. 6 ft
	with Guardrail\Barrier	55-4.05	Paved shoulder width + 2 ft
	Typical Surface Type	Ch. 304	Asphalt
	Cross Slope		
	***Travel Lane**	55-4.05	2%
	Shoulder	55-4.05	2%; 4% w/guardrail
	Auxiliary Lanes		
	Lane Width	55-4.05	N/A
	Shoulder Width	55-4.05	N/A
	TWLTL Width	46-5.0	16 ft
	Obstruction Free Zone Width	55-5.02	10 ft + min. paved shldr width
	Side Slopes		
	Cut Foreslope	55-5.0	2:1
	Cut Ditch Width	55-5.0	Existing
	Cut Backslope	55-5.0	2:1
	Fill	55-5.0	2:1
BRIDGES	**New and Reconstructed Bridges**		
	***Structural Capacity**	Chp. 403	HL-93
	***Clear Roadway Width**	55-6.03	Uncurbed: Full approach width
	Existing Bridges to Remain in Place		
	***Structural Capacity**	Chp. 72	HS-20
	***Clear Roadway Width**	55-6.02	Uncurbed: Travelway plus 2 ft on each side
	***Vertical Clearance (Arterial Under)**		
	New and Replaced Overpassing Bridge	44-4.0	16.5 ft
	Existing Overpassing Bridge	44-4.0	14 ft
	Sign Truss/Pedestrian Bridge	44-4.0	N/A
	Arterial over Railroad	Ch. 402-6.01	Existing
ALIGNMENT ELEMENTS	***Stopping Sight Distance**	Fig. 42-1A	250 ft
	Decision Sight Distance	42-2.0	
	Speed/path/direction change	42-2.0	U: 720 ft; SU: 625 ft
	Stop Manuever	42-2.0	650 ft
	Intersection Sight Distance, -3% to +3%	46-10.0	P: 390 ft SUT: 490 ft
	***Minimum Radius, e=6%**	Fig. 43-2B	340 ft
	***Superelevation Rate**	43-3.0	e_{max}= 6%
	***Horizontal Sight Distance**	43-4.0	250 ft
	***Vertical Curvature, K-value**		
	Crest	44-3.0	Existing
	Sag	Fig. 55-4A	27
	Vertical Grades		
	***Maximum**	55-4.0	Level: 9% Rolling: 10%
	Minimum	44-1.03	Curbed Des: 0.5%, Curbed Min: 0.3%, Uncurbed: 0%

* Indicates Level One controlling design criteria. A deviation from such is a design exception, and is subject to approval. See section 40-8.0

TABLE 1: Major Collector (3R, Non-Freeway), Project:
Project: I-69 Section 6 Contract 5 Segment A (W. Mooresville Road Bypass)

INDOT (des.) #1802075

Date Updated: 08/22/2019 By: CWB

	DESIGN CRITERIA	MANUAL SECTION (2013 IDM - English)	PROJECT-SPECIFIC CRITERIA DEFINITION
DESIGN CONTROLS	**Functional Classification**		Non-Freeway, 3R (Urban Major Collector)
	INDOT Geometric Design Table	Chp. 55	Table 55-3G
	Design Year Traffic, AADT	40-2.01	3,878 (2045)
	Design Vehicle	Fig. 46-1E	WB-50
	***Design Speed, MPH**	Fig. 55-3G	Posted Speed Limit (30 MPH)
	Access Control	Fig. 55-3G	None
	Level of Service	40-2.0	Desirable: C; Minimum: D
CROSS SECTION ELEMENTS	**Travel Lane**		
	***Width**	55-4.05	Curbed: 12 ft Uncurbed: 12 ft
	Typical Surface Type	Ch. 52	Asphalt
	Shoulder		
	***Paved Width**	55-4.05	Curbed Des: 8 ft; Min. 1 ft Uncurbed Des: 8 ft; Min. 4 ft
	with Guardrail\Barrier	55-4.05	Paved shoulder width + 2 ft
	Typical Surface Type	Ch. 304	Asphalt
	Cross Slope		
	***Travel Lane**	55-4.05	2%
	Shoulder	55-4.05	2%; 4% w/guardrail
	Auxiliary Lanes		
	Lane Width	55-4.05	N/A
	Shoulder Width	55-4.05	N/A
	Obstruction-Free-Zone Width	55-5.02	6 ft + min. paved shldr width
	Side Slopes	55-4.05	Existing
	Cut Foreslope	55-4.05	2:1
	Cut Ditch Width	55-4.05	Existing
	Cut Backslope	55-4.05	2:1
	Fill	55-4.05	2:1
BRIDGES	**New and Reconstructed Bridges**		
	***Structural Capacity**	Ch. 403	HL-93
	***Clear Roadway Width**	55-6.03	Uncurbed: Full approach width
	Existing Bridges to Remain in Place		
	***Structural Capacity**	Chp. 72	HS-15
	***Clear Roadway Width**	55-6.02	Uncurbed: Travelway plus 2 ft on each side
	***Vertical Clearance (Collector Under)**		
	New and Replaced Overpassing Bridge	55-6.0	14.5 ft
	Existing Overpassing Bridge	55-6.0	14 ft
	Collector over Railroad	Ch. 402-6.01	23 ft
ALIGNMENT ELEMENTS	***Stopping Sight Distance**	Fig. 42-1A	200 ft
	Decision Sight Distance	42-2.0	
	Speed/path/direction change	42-2.0	U: 620 ft; SU: 535 ft
	Stop Manuever	42-2.0	490 ft
	Intersection Sight Distance, -3% to +3%	46-10.0	P: 330 ft SUT: 420 ft
	***Minimum Radius, e=8%**	Fig. 43-2B	250 ft
	***Superelevation Rate**	43-3.0	e_{max}= 6%
	***Horizontal Sight Distance**	43-4.0	200 ft
	***Vertical Curvature, K-value**		
	Crest	44-3.0	Existing
	Sag	Fig. 55-4A	20
	Vertical Grades		
	***Maximum**	55-4.0	Level: 11% Rolling: 13%
	Minimum	44-1.03	Curbed Des: 0.5%, Curbed Min: 0.3%, Uncurbed: 0%

* Indicates Level One controlling design criteria. A deviation from such is a design exception, and is subject to approval. See section 40-8.0

I-69 Section 6 Contract 5 Design Criteria
Route: I-465 "Line ZZ"

INDOT (des.) #1801695

	DESIGN ELEMENT	INDIANA DESIGN MANUAL SECTION (2013 - English)	PROJECT-SPECIFIC CRITERIA DEFINITION
DESIGN CONTROLS	**Functional Classification**	40-1.01	Freeway, 4R (Urban)
	INDOT Geometric Design Table	Ch. 53	Figure 53-1
	Design Year Traffic, AADT (2045)	Fig. 40-2A	West of I-69: 147,900 East of I-69: 140,700
	Design Vehicle	Fig. 46-1E	IDV
	***Design Speed, mph**	Fig. 53-1	70 mph
	Access Control	Fig. 53-1	Full Control
	Level of Service	Fig. 53-1	Desirable: B; Minimum: D
CROSS SECTION ELEMENTS	**Travel Lane**		
	***Width**	45-1.01	12 ft
	Surface Type	Ch. 304	Asphalt / Concrete
	Shoulder		
	***Right Width Usable**	45-1.02	13 ft
	***Right Width Paved**	45-1.02	12 ft; 14 ft with barrier
	***Left Width Paved**	45-1.02	14 ft
	Surface Type	Ch. 304	Asphalt / Concrete
	Cross Slope		
	***Travel Lane**	45-1.01	2%
	Shoulder	45-1.02	4%
	Auxiliary Lanes		
	***Lane Width**	45-1.03	12 ft
	***Shoulder Width**	45-1.03	12 ft
	Median Width		
	Depressed	45-2.0	N/A
	Flush, with CMB	45-2.0	30.5 ft
	Clear Zone Width	49-2.0	30 ft + 1 ft to front face of MSE Walls
	Side Slopes		
	Cut Foreslope	45-3.0	6:1
	Cut Ditch Width	45-3.0	4 ft
	Cut Backslope	45-3.0	4:1 for 20 ft., then 3:1 max
	Fill	45-3.0	6:1 to Clear Zone; 3:1 max. to Toe
	Median Slopes	45-2.02	N/A
BRIDGES	**New or Reconstructed Bridges**		
	***Structural Capacity**	Ch. 403	HL-93
	***Clear-Roadway Width**	45-4.01	13.875 ft Lt + Travel Way + 13.667 ft Rt
	Existing Bridges to Remain in Place		
	***Structural Capacity**	Ch. 72	N/A
	***Clear-Roadway Width**	45-4.01	N/A
	***Vertical Clearance (Freeway Under)**		
	New or Replaced Overpassing Bridge	44-4.0	16.5 ft
	Existing Overpassing Bridge	44-4.0	N/A
	Sign Truss/Pedestrian Bridge	44-4.0	N/A
	Vertical Clearance, Freeway over Railroad	402-6.01	23 ft
ALIGNMENT ELEMENTS	***Stopping Sight Distance**	42-1.0	730 ft
	Decision Sight Distance		
	Avoidance maneuver	42-2.0	1445 ft
	***Minimum Radius, e=8%**	43-2.0	1810 ft
	***Superelevation Rate**	43-3.0	e_{max}= 8%
	***Horizontal Sight Distance**	43-4.0	730 ft
	***Vertical Curvature, K-value**		
	Crest	44-3.0	312
	Sag	44-3.0	181
	Vertical Grades		
	***Maximum**	44-1.02	Level: 3%
	Minimum	44-1.03	Desirable: 0.5%, Minimum: 0.3%

* Indicates Level One controlling design criteria. A deviation from such is a design exception, and is subject to approval. See section 40-8.0

I-69 Section 6 Contract 5 Design Criteria
Route: Ramp - Line "A-ZZ-NE-C"

INDOT (des.) #1801695

	DESIGN ELEMENT	INDIANA DESIGN MANUAL SECTION (2013 - English)	PROJECT-SPECIFIC CRITERIA DEFINITION
DESIGN CONTROLS	**Functional Classification**		Freeway Ramp (System)
	INDOT Geometric Design Table	Ch. 48	Figure 48-5A
	Design Year Traffic, AADT (2045)	40-2.01	18,400
	Design Vehicle	Fig. 46-1E	IDV
	***Design Speed, mph**	Fig. 48-5A	55 mph
	Access Control	Fig. 53-1	Full Control
	Level of Service	Fig. 53-1	Desirable: B; Minimum: C
CROSS SECTION ELEMENTS	**Travel Lane**		
	***Width**	48-5.02	12 ft per lane
	Surface Type	Ch. 304	Asphalt / Concrete
	Shoulder		
	***Right Width Usable**	48-5.02	11 ft
	***Right Width Paved**	48-5.02	10 ft; 12 ft with barrier
	***Left Width Usable**	48-5.02	5 ft
	***Left Width Paved**	48-5.02	4 ft; 6 ft with barrier
	Cross Slope		
	***Travel Lane**	48-5.02	2%
	Shoulder	48-5.02	Right: 4%; Left: 2%
	Clear Zone Width	49-2.0	24 ft + 1 ft to front face of MSE walls
	Side Slopes		
	Cut Foreslope	45-3.0	6:1
	Cut Ditch Width	45-3.0	4 ft
	Cut Backslope	45-3.0	4:1
	Fill	45-3.0	6:1 to Clear Zone; 3:1 max. to Toe
BRIDGES	**New or Reconstructed Bridges**		
	***Structural Capacity**	Ch. 403	HL-93
	***Clear-Roadway Width**	45-4.01	5.667 ft Lt + Travel Way + 11.667 ft Rt
	Existing Bridges to Remain in Place		
	***Structural Capacity**	Ch. 72	N/A
	***Clear-Roadway Width**	45-4.01	N/A
	***Vertical Clearance (Freeway Under)**		
	New or Replaced Overpassing Bridge	44-4.0	N/A
	Existing Overpassing Bridge	44-4.0	N/A
	Sign Truss/Pedestrian Bridge	44-4.0	N/A
	Vertical Clearance, Freeway over Railroad	402-6.01	N/A
ALIGNMENT ELEMENTS	***Stopping Sight Distance**	42-1.0	495 ft
	Decision Sight Distance		
	Avoidance maneuver	42-2.0	1135 ft
	***Minimum Radius, e=8%**	43-2.0	960 ft
	***Superelevation Rate**	48-5.03 (02)	e_{max}= 8%
	***Horizontal Sight Distance**	43-4.0	495 ft
	***Vertical Curvature, K-value**		
	Crest	44-3.0	151
	Sag	44-3.0	115
	Vertical Grades		
	***Maximum**	48-5.04(01)	4.0%
	Minimum	44-1.03	Desirable: 0.5%, Minimum: 0.30%

* Indicates Level One controlling design criteria. A deviation from such is a design exception, and is subject to approval. See section 40-8.0

I-69 Section 6 Contract 5 Design Criteria
Route: Ramp - Line "A-ZZ-NW-C"

INDOT (des.) #1801695

	DESIGN ELEMENT	INDIANA DESIGN MANUAL SECTION (2013 - English)	PROJECT-SPECIFIC CRITERIA DEFINITION
DESIGN CONTROLS	**Functional Classification**		Freeway Ramp (System)
	INDOT Geometric Design Table	Ch. 48	Figure 48-5A
	Design Year Traffic, AADT (2045)	40-2.01	24,900
	Design Vehicle	Fig. 46-1E	IDV
	***Design Speed, mph**	Fig. 48-5A	55 mph
	Access Control	Fig. 53-1	Full Control
	Level of Service	Fig. 53-1	Desirable: B; Minimum: C
CROSS SECTION ELEMENTS	**Travel Lane**		
	***Width**	48-5.02	12 ft per lane
	Surface Type	Ch. 304	Asphalt / Concrete
	Shoulder		
	***Right Width Usable**	48-5.02	11 ft
	***Right Width Paved**	48-5.02	10 ft; 12 ft with barrier
	***Left Width Usable**	48-5.02	5 ft
	***Left Width Paved**	48-5.02	4 ft; 6 ft with barrier
	Cross Slope		
	***Travel Lane**	48-5.02	2%
	Shoulder	48-5.02	Right: 4%; Left: 2%
	Clear Zone Width	49-2.0	24 ft + 1 ft to front face of MSE walls
	Side Slopes		
	Cut Foreslope	45-3.0	6:1
	Cut Ditch Width	45-3.0	4 ft
	Cut Backslope	45-3.0	4:1
	Fill	45-3.0	6:1 to Clear Zone; 3:1 max. to Toe
BRIDGES	**New or Reconstructed Bridges**		
	***Structural Capacity**	Ch. 403	HL-93
	***Clear-Roadway Width**	45-4.01	5.667 ft Lt + Travel Way + 11.667 ft Rt
	Existing Bridges to Remain in Place		
	***Structural Capacity**	Ch. 72	N/A
	***Clear-Roadway Width**	45-4.01	N/A
	***Vertical Clearance (Freeway Under)**		
	New or Replaced Overpassing Bridge	44-4.0	16.5 ft
	Existing Overpassing Bridge	44-4.0	N/A
	Sign Truss/Pedestrian Bridge	44-4.0	N/A
	Vertical Clearance, Freeway over Railroad	402-6.01	N/A
ALIGNMENT ELEMENTS	***Stopping Sight Distance**	42-1.0	495 ft
	Decision Sight Distance		
	Avoidance maneuver	42-2.0	1135 ft
	***Minimum Radius, e=8%**	43-2.0	960 ft
	***Superelevation Rate**	48-5.03 (02)	e_{max}= 8%
	***Horizontal Sight Distance**	43-4.0	495 ft
	***Vertical Curvature, K-value**		
	Crest	44-3.0	151
	Sag	44-3.0	115
	Vertical Grades		
	***Maximum**	48-5.04(01)	4.0%
	Minimum	44-1.03	Desirable: 0.5%, Minimum: 0.30%

* Indicates Level One controlling design criteria. A deviation from such is a design exception, and is subject to approval. See section 40-8.0

I-69 Section 6 Contract 5 Design Criteria
Route: Ramp - Line "ZZ-A-ES-C"

INDOT (des.) #1801695

	DESIGN ELEMENT	INDIANA DESIGN MANUAL SECTION (2013 - English)	PROJECT-SPECIFIC CRITERIA DEFINITION
DESIGN CONTROLS	**Functional Classification**		Freeway Ramp (System)
	INDOT Geometric Design Table	Ch. 48	Figure 48-5A
	Design Year Traffic, AADT (2045)	40-2.01	22,000
	Design Vehicle	Fig. 46-1E	IDV
	***Design Speed, mph**	Fig. 48-5A	55 mph
	Access Control	Fig. 53-1	Full Control
	Level of Service	Fig. 53-1	Desirable: B; Minimum: C
CROSS SECTION ELEMENTS	**Travel Lane**		
	***Width**	48-5.02	12 ft per lane
	Surface Type	Ch. 304	Asphalt / Concrete
	Shoulder		
	***Right Width Usable**	48-5.02	11 ft
	***Right Width Paved**	48-5.02	10 ft; 12 ft with barrier
	***Left Width Usable**	48-5.02	5 ft
	***Left Width Paved**	48-5.02	4 ft; 6 ft with barrier
	Cross Slope		
	***Travel Lane**	48-5.02	2%
	Shoulder	48-5.02	Right: 4%; Left: 2%
	Clear Zone Width	49-2.0	24 ft + 1 ft to front face of MSE walls
	Side Slopes		
	Cut Foreslope	45-3.0	6:1
	Cut Ditch Width	45-3.0	4 ft
	Cut Backslope	45-3.0	4:1
	Fill	45-3.0	6:1 to Clear Zone; 3:1 max. to Toe
ALIGNMENT ELEMENTS	***Stopping Sight Distance**	42-1.0	495 ft
	Decision Sight Distance		
	Avoidance maneuver	42-2.0	1135 ft
	***Minimum Radius, e=8%**	43-2.0	960 ft
	***Superelevation Rate**	48-5.03 (02)	e_{max}= 8%
	***Horizontal Sight Distance**	43-4.0	495 ft
	***Vertical Curvature, K-value**		
	Crest	44-3.0	151
	Sag	44-3.0	115
	Vertical Grades		
	***Maximum**	48-5.04(01)	4.0%
	Minimum	44-1.03	Desirable: 0.5%, Minimum: 0.30%

* Indicates Level One controlling design criteria. A deviation from such is a design exception, and is subject to approval. See section 40-8.0

I-69 Section 6 Contract 5 Design Criteria
Route: Ramp - Line "ZZ-A-WS-C"

INDOT (des.) #1801695

	DESIGN ELEMENT	INDIANA DESIGN MANUAL SECTION (2013 - English)	PROJECT-SPECIFIC CRITERIA DEFINITION
DESIGN CONTROLS	**Functional Classification**		Freeway Ramp (System)
	INDOT Geometric Design Table	Ch. 48	Figure 48-5A
	Design Year Traffic, AADT (2045)	40-2.01	16,800
	Design Vehicle	Fig. 46-1E	IDV
	***Design Speed, mph**	Fig. 48-5A	55 mph
	Access Control	Fig. 53-1	Full Control
	Level of Service	Fig. 53-1	Desirable: B; Minimum: C
CROSS SECTION ELEMENTS	**Travel Lane**		
	***Width**	48-5.02	12 ft per lane
	Surface Type	Ch. 304	Asphalt / Concrete
	Shoulder		
	***Right Width Usable**	48-5.02	11 ft
	***Right Width Paved**	48-5.02	10 ft; 12 ft with barrier
	***Left Width Usable**	48-5.02	5 ft
	***Left Width Paved**	48-5.02	4 ft; 6 ft with barrier
	Cross Slope		
	***Travel Lane**	48-5.02	2%
	Shoulder	48-5.02	Right: 4%; Left: 2%
	Clear Zone Width	49-2.0	24 ft + 1 ft to front face of MSE walls
	Side Slopes		
	Cut Foreslope	45-3.0	6:1
	Cut Ditch Width	45-3.0	4 ft
	Cut Backslope	45-3.0	4:1
	Fill	45-3.0	6:1 to Clear Zone; 3:1 max. to Toe
BRIDGES	**New or Reconstructed Bridges**		
	***Structural Capacity**	Ch. 403	HL-93
	***Clear-Roadway Width**	45-4.01	5.667 ft Lt + Travel Way + 11.667 ft Rt
	Existing Bridges to Remain in Place		
	***Structural Capacity**	Ch. 72	N/A
	***Clear-Roadway Width**	45-4.01	N/A
	***Vertical Clearance (Freeway Under)**		
	New or Replaced Overpassing Bridge	44-4.0	16.5 ft
	Existing Overpassing Bridge	44-4.0	N/A
	Sign Truss/Pedestrian Bridge	44-4.0	N/A
	Vertical Clearance, Freeway over Railroad	402-6.01	N/A
ALIGNMENT ELEMENTS	***Stopping Sight Distance**	42-1.0	495 ft
	Decision Sight Distance		
	Avoidance maneuver	42-2.0	1135 ft
	***Minimum Radius, e=8%**	43-2.0	960 ft
	***Superelevation Rate**	48-5.03 (02)	e_{max}= 8%
	***Horizontal Sight Distance**	43-4.0	495 ft
	***Vertical Curvature, K-value**		
	Crest	44-3.0	151
	Sag	44-3.0	115
	Vertical Grades		
	***Maximum**	48-5.04(01)	4.0%
	Minimum	44-1.03	Desirable: 0.5%, Minimum: 0.30%

* Indicates Level One controlling design criteria. A deviation from such is a design exception, and is subject to approval. See section 40-8.0

I-69 Section 6 Contract 5 Design Criteria
Route: Line "PR-Mann"

INDOT (des.) #1801695

	DESIGN ELEMENT	INDIANA DESIGN MANUAL SECTION (2013 - English)	PROJECT-SPECIFIC CRITERIA DEFINITION
DESIGN CONTROLS	**Functional Classification**	40-1.01	Urban Arterial (Intermediate), 4R
	INDOT Geometric Design Table	Ch. 53	Figure 53-7
	Design Year Traffic, AADT (2045)	Fig. 40-2A	14,500
	Design Vehicle	Fig. 46-1E	IDV
	***Design Speed, mph**	Fig. 53-7	40 mph
	Access Control	Fig. 53-7	None
	Level of Service	Fig. 53-7	D
CROSS SECTION ELEMENTS	**Travel Lane**		
	***Width**	45-1.01	12 ft
	Surface Type	Ch. 304	Asphalt / Concrete
	***Curb Offset**	45-1.02	2 ft
	Shoulder		
	***Paved Width**	45-1.02	8 ft
	Surface Type	Ch. 304	Asphalt / Concrete
	Cross Slope		
	***Travel Lane**	45-1.01	2%
	Shoulder	45-1.02	4%
	Auxiliary Lanes		
	Lane Width	45-1.03	12 ft
	Curb Offset	45-1.03	2 ft
	Shoulder Width	45-1.03	2 ft
	Surface Type	Ch. 304	Asphalt / Concrete
	TWLTL Width	46-5.0	N/A
	Parking-Lane Width	45-1.04	N/A
	Sidewalk Width	45-1.06	N/A
	Bicycle-Lane Width	51-7.0	N/A
	Clear Zone Width	49-2.0	16 ft
	Typical Curbing Type, where used	45-1.05	Vertical
	Side Slopes (Uncurbed)		
	Cut Foreslope	45-3.0	N/A
	Cut Ditch Width	45-3.0	N/A
	Cut Backslope	45-3.0	N/A
	Fill	45-3.0	N/A
	Side Slopes (Curbed)		
	Cut Backslope	45-3.0	6 ft shelf; 2 ft to toe of slope
	Fill	45-3.0	12:1 for 12 ft; 3:1 Max to Toe
BRIDGES	**New or Reconstructed Bridges**		
	***Structural Capacity**	Ch. 403	HL-93
	***Clear-Roadway Width**	45-4.01	9.667 ft Rt + Travel Way + 9.667 ft Lt
	Existing Bridges to Remain in Place		
	***Structural Capacity**	Ch. 72	N/A
	***Clear-Roadway Width**	45-4.0	N/A
	***Vertical Clearance (Freeway Under)**		
	New or Replaced Overpassing Bridge	44-4.0	N/A
	Existing Overpassing Bridge	44-4.0	N/A
	Sign Truss/Pedestrian Bridge	44-4.0	N/A
	Vertical Clearance, Local over Railroad	402-6.01	N/A
ALIGNMENT ELEMENTS	***Stopping Sight Distance**	42-1.0	305 ft
	Decision Sight Distance		
	Avoidance maneuver	42-2.0	U: 825 ft; SU: 715 ft
	Stop Maneuver	42-2.0	690 ft
	Intersection Sight Distance	46-10.0	P: 440 ft; SUT: 560 ft
	***Minimum Radius, e=8%**	43-2.0	485 ft
	***Superelevation Rate**	43-3.0	emax= 6%
	***Horizontal Sight Distance**	43-4.0	305 ft
	***Vertical Curvature, K-value**		
	Crest	44-3.0	61
	Sag	44-3.0	64
	Vertical Grades		
	***Maximum**	44-1.02	Level: 6.5%
	Minimum	44-1.03	Des: 0.5%; Min: 0.3% (Curbed) 0.0% (Uncurbed)

* Indicates Level One controlling design criteria. A deviation from such is a design exception, and is subject to approval. See section 40-8.0

I-69 Section 6 Contract 5 Design Criteria
Route: Ramp - Line "Mann-EBEN-C"

INDOT (des.) #1801695

	DESIGN ELEMENT	INDIANA DESIGN MANUAL SECTION (2013 - English)	PROJECT-SPECIFIC CRITERIA DEFINITION
DESIGN CONTROLS	**Functional Classification**		Freeway Ramp (Service)
	INDOT Geometric Design Table	Ch. 48	Figure 48-5A
	Design Year Traffic, AADT (2045)	40-2.01	6,500
	Design Vehicle	Fig. 46-1E	IDV
	***Design Speed, mph**	Fig. 48-5A	Varies - See separate exhibit
	Access Control	Fig. 53-1	Full Control
	Level of Service	Fig. 53-1	Desirable: B; Minimum: C
CROSS SECTION ELEMENTS	**Travel Lane**		
	***Width**	48-5.02	16 ft
	Surface Type	Ch. 304	Asphalt / Concrete
	Shoulder		
	***Right Width Usable**	48-5.02	11 ft
	***Right Width Paved**	48-5.02	8 ft; 10 ft with barrier
	***Left Width Usable**	48-5.02	5 ft
	***Left Width Paved**	48-5.02	4 ft; 6 ft with barrier
	Cross Slope		
	***Travel Lane**	48-5.02	2%
	Shoulder	48-5.02	Right: 4%; Left: 2%
	Clear Zone Width	49-2.0	Varies
	Side Slopes		
	Cut Foreslope	45-3.0	6:1
	Cut Ditch Width	45-3.0	4 ft
	Cut Backslope	45-3.0	4:1
	Fill	45-3.0	6:1 to Clear Zone; 3:1 max. to Toe
ALIGNMENT ELEMENTS	***Stopping Sight Distance**	42-1.0	Varies per curve DS - See Calculations
	Decision Sight Distance		
	Avoidance maneuver	42-2.0	Varies per curve DS - See Calculations
	***Minimum Radius, e=8%**	43-2.0	Varies per curve DS - See Calculations
	***Superelevation Rate**	48-5.03	e_{max}= 8%
	***Horizontal Sight Distance**	43-4.0	Varies per curve DS - See Calculations
	***Vertical Curvature, K-value**		
	Crest	44-3.0	Varies per curve DS - See Calculations
	Sag	44-3.0	Varies per curve DS - See Calculations
	Vertical Grades		
	***Maximum**	48-5.04(01)	5.0%
	Minimum	44-1.03	0.3%

* Indicates Level One controlling design criteria. A deviation from such is a design exception, and is subject to approval. See section 40-8.0

I-69 Section 6 Contract 5 Design Criteria
Route: Ramp - Line "Mann-WBEX-C"

INDOT (des.) #1801695

	DESIGN ELEMENT	INDIANA DESIGN MANUAL SECTION (2013 - English)	PROJECT-SPECIFIC CRITERIA DEFINITION
DESIGN CONTROLS	**Functional Classification**		Freeway Ramp (Service)
	INDOT Geometric Design Table	Ch. 48	Figure 48-5A
	Design Year Traffic, AADT (2045)	40-2.01	7,700
	Design Vehicle	Fig. 46-1E	IDV
	***Design Speed, mph**	Fig. 48-5A	Varies - See separate exhibit
	Access Control	Fig. 53-1	Full Control
	Level of Service	Fig. 53-1	Desirable: B; Minimum: C
CROSS SECTION ELEMENTS	**Travel Lane**		
	***Width**	48-5.02	12 ft
	Surface Type	Ch. 304	Asphalt / Concrete
	Shoulder		
	***Right Width Usable**	48-5.02	11 ft
	***Right Width Paved**	48-5.02	10 ft; 12 ft with barrier
	***Left Width Usable**	48-5.02	5 ft
	***Left Width Paved**	48-5.02	4 ft; 6 ft with barrier
	Cross Slope		
	***Travel Lane**	48-5.02	2%
	Shoulder	48-5.02	Right: 4%; Left: 2%
	Clear Zone Width	49-2.0	Varies
	Side Slopes		
	Cut Foreslope	45-3.0	6:1
	Cut Ditch Width	45-3.0	4 ft
	Cut Backslope	45-3.0	4:1
	Fill	45-3.0	6:1 to Clear Zone; 3:1 max. to Toe
ALIGNMENT ELEMENTS	***Stopping Sight Distance**	42-1.0	Varies per curve DS - See Calculations
	Decision Sight Distance		
	Avoidance maneuver	42-2.0	Varies per curve DS - See Calculations
	***Minimum Radius, e=8%**	43-2.0	Varies per curve DS - See Calculations
	***Superelevation Rate**	48-5.03	emax= 8%
	***Horizontal Sight Distance**	43-4.0	Varies per curve DS - See Calculations
	***Vertical Curvature, K-value**		
	Crest	44-3.0	Varies per curve DS - See Calculations
	Sag	44-3.0	Varies per curve DS - See Calculations
	Vertical Grades		
	***Maximum**	48-5.04(01)	5.0%
	Minimum	44-1.03	0.3%

* Indicates Level One controlling design criteria. A deviation from such is a design exception, and is subject to approval. See section 40-8.0

I-69 Section 6 Contract 5 Design Criteria
Route: "Line A" - Harding St

INDOT (des.) #1801695

	DESIGN ELEMENT	INDIANA DESIGN MANUAL SECTION (2013 - English)	PROJECT-SPECIFIC CRITERIA DEFINITION
DESIGN CONTROLS	**Functional Classification**	40-1.01	Urban Principal Arterial (Intermediate), 3R
	INDOT Geometric Design Table	Ch. 55	Figure 55-3E
	Design Year Traffic, AADT (2045)	Fig. 40-4A	26,800
	Design Vehicle	Fig. 46-1E	WB-62
	***Design Speed, mph**	Fig. 55-3F	45 mph
	Access Control	Fig. 55-3F	None
	Level of Service	Fig. 55-3F	Desirable: C; Minimum: D
CROSS SECTION ELEMENTS	**Travel Lane**		
	***Width**	55-4.05	12 ft
	Surface Type	Ch. 304	Asphalt / Concrete
	***Curb Offset**	55-4.05	2 ft
	Shoulder		
	***Paved Width**	55-4.05	8 ft; match existing
	Surface Type	Ch. 304	Asphalt / Concrete
	Cross Slope		
	***Travel Lane**	55-4.05	2%
	Shoulder	55-4.05	2%
	Auxiliary Lanes		
	Lane Width	55-4.05	12 ft
	Curb Offset	55-4.05	2 ft
	Shoulder Width	55-4.05	2 ft
	Surface Type	Ch. 304	Asphalt / Concrete
	TWLTL Width	46-5.0	N/A
	Parking-Lane Width	45-1.04	N/A
	Sidewalk Width	45-1.06	6 ft
	Bicycle-Lane Width	51-7.0	N/A
	Obstruction Free Zone	55-5.02	12 ft
	Typical Curbing Type, where used	55-5.0	Vertical
	Side Slopes (Uncurbed)		
	Cut Foreslope	55-5.0	2:1 or flatter
	Cut Ditch Width	55-5.0	Existing
	Cut Backslope	55-5.0	2:1 or flatter
	Fill	55-5.0	2:1 or flatter
	Side Slopes (Curbed)		
	Cut Backslope	55-4.05	6 ft shelf; 1 ft to toe of slope
	Fill	55-4.05	2:1 or flatter
BRIDGES	**New or Reconstructed Bridges**		
	***Structural Capacity**	Ch. 403	N/A
	***Clear-Roadway Width**	55-6.03	N/A
	Existing Bridges to Remain in Place		
	***Structural Capacity**	Ch. 72	N/A
	***Clear-Roadway Width**	55-6.02	N/A
	***Vertical Clearance (Freeway Under)**		
	New or Replaced Overpassing Bridge	44-4.0	16.5 ft
	Existing Overpassing Bridge	44-4.0	N/A
	Sign Truss/Pedestrian Bridge	44-4.0	N/A
	Vertical Clearance, Freeway over Railroad	402-6.01	N/A
ALIGNMENT ELEMENTS	***Stopping Sight Distance**	55-4.02	360 ft
	Decision Sight Distance		
	Avoidance maneuver	42-2.0	U: 930 ft; SU: 800 ft
	Stop Maneuver	42-2.0	825 ft
	Intersection Sight Distance	55-4.06	P: 530 ft; SUT: 675 ft
	***Minimum Radius, e=8%**	55-4.03	emax= 8%
	***Superelevation Rate**	55-4.03	Varies - See separate exhibit
	***Horizontal Sight Distance**	55-4.03	360 ft
	***Vertical Curvature, K-value**		
	Crest	55-4.04	84
	Sag	55-4.04	79
	Vertical Grades		
	***Maximum**	55-4.04	Level: 8.5%
	Minimum	44-1.03	Curb Des: 0.5%; Curb Min: 0.3%; Uncurbed: 0%

* Indicates Level One controlling design criteria. A deviation from such is a design exception, and is subject to approval. See section 40-8.0

I-69 Section 6 Contract 5 Design Criteria
Route: Ramp - Line "Harding-EBEN-C"

INDOT (des.) #1801695

	DESIGN ELEMENT	INDIANA DESIGN MANUAL SECTION (2013 - English)	PROJECT-SPECIFIC CRITERIA DEFINITION
DESIGN CONTROLS	**Functional Classification**		Freeway Ramp (Service)
	INDOT Geometric Design Table	Ch. 48	Figure 48-5A
	Design Year Traffic, AADT (2045)	40-2.01	7,400
	Design Vehicle	Fig. 46-1E	IDV
	***Design Speed, mph**	Fig. 48-5A	Varies - See separate exhibit
	Access Control	Fig. 53-1	Full Control
	Level of Service	Fig. 53-1	Desirable: B; Minimum: C
CROSS SECTION ELEMENTS	**Travel Lane**		
	***Width**	48-5.02	16 ft
	Surface Type	Ch. 304	Asphalt / Concrete
	Shoulder		
	***Right Width Usable**	48-5.02	11 ft
	***Right Width Paved**	48-5.02	8 ft; 10 ft with barrier
	***Left Width Usable**	48-5.02	5 ft
	***Left Width Paved**	48-5.02	4 ft; 6 ft with barrier
	Cross Slope		
	***Travel Lane**	48-5.02	2%
	Shoulder	48-5.02	Right: 4%; Left: 2%
	Clear Zone Width	49-2.0	24 ft
	Side Slopes		
	Cut Foreslope	45-3.0	6:1
	Cut Ditch Width	45-3.0	4 ft
	Cut Backslope	45-3.0	4:1
	Fill	45-3.0	6:1 to Clear Zone; 3:1 max. to Toe
ALIGNMENT ELEMENTS	***Stopping Sight Distance**	42-1.0	Varies per curve DS - See Calculations
	Decision Sight Distance		
	Avoidance maneuver	42-2.0	Varies per curve DS - See Calculations
	***Minimum Radius, e=8%**	43-2.0	Varies per curve DS - See Calculations
	***Superelevation Rate**	48-5.03	emax= 8%
	***Horizontal Sight Distance**	43-4.0	Varies per curve DS - See Calculations
	***Vertical Curvature, K-value**		
	Crest	44-3.0	Varies per curve DS - See Calculations
	Sag	44-3.0	Varies per curve DS - See Calculations
	Vertical Grades		
	***Maximum**	48-5.04(01)	5.0%
	Minimum	44-1.03	0.3%

* Indicates Level One controlling design criteria. A deviation from such is a design exception, and is subject to approval. See section 40-8.0

I-69 Section 6 Contract 5 Design Criteria
Route: Ramp - Line "Harding-EBEX-C"

INDOT (des.) #1801695

	DESIGN ELEMENT	INDIANA DESIGN MANUAL SECTION (2013 - English)	PROJECT-SPECIFIC CRITERIA DEFINITION
DESIGN CONTROLS	**Functional Classification**		Freeway Ramp (Service)
	INDOT Geometric Design Table	Ch. 48	Figure 48-5A
	Design Year Traffic, AADT (2045)	40-2.01	6,200
	Design Vehicle	Fig. 46-1E	IDV
	***Design Speed, mph**	Fig. 48-5A	Varies - See separate exhibit
	Access Control	Fig. 53-1	Full Control
	Level of Service	Fig. 53-1	Desirable: B; Minimum: C
CROSS SECTION ELEMENTS	**Travel Lane**		
	***Width**	48-5.02	16 ft
	Surface Type	Ch. 304	Asphalt / Concrete
	Shoulder		
	***Right Width Usable**	48-5.02	11 ft
	***Right Width Paved**	48-5.02	8 ft; 10 ft with barrier
	***Left Width Usable**	48-5.02	5 ft
	***Left Width Paved**	48-5.02	4 ft; 6 ft with barrier
	Cross Slope		
	***Travel Lane**	48-5.02	2%
	Shoulder	48-5.02	Right: 4%; Left: 2%
	Clear Zone Width	49-2.0	24 ft
	Side Slopes		
	Cut Foreslope	45-3.0	6:1
	Cut Ditch Width	45-3.0	4 ft
	Cut Backslope	45-3.0	4:1
	Fill	45-3.0	6:1 to Clear Zone; 3:1 max. to Toe
BRIDGES	**New or Reconstructed Bridges**		
	***Structural Capacity**	Ch. 403	N/A
	***Clear-Roadway Width**	45-4.01	N/A
	Existing Bridges to Remain in Place		
	***Structural Capacity**	Ch. 72	N/A
	***Clear-Roadway Width**	45-4.01	N/A
	***Vertical Clearance (Freeway Under)**		
	New or Replaced Overpassing Bridge	44-4.0	16.5 ft
	Existing Overpassing Bridge	44-4.0	N/A
	Sign Truss/Pedestrian Bridge	44-4.0	N/A
	Vertical Clearance, Freeway over Railroad	402-6.01	N/A
ALIGNMENT ELEMENTS	***Stopping Sight Distance**	42-1.0	Varies per curve DS - See Calculations
	Decision Sight Distance		
	Avoidance maneuver	42-2.0	Varies per curve DS - See Calculations
	***Minimum Radius, e=8%**	43-2.0	Varies per curve DS - See Calculations
	***Superelevation Rate**	48-5.03	emax= 8%
	***Horizontal Sight Distance**	43-4.0	Varies per curve DS - See Calculations
	***Vertical Curvature, K-value**		
	Crest	44-3.0	Varies per curve DS - See Calculations
	Sag	44-3.0	Varies per curve DS - See Calculations
	Vertical Grades		
	***Maximum**	48-5.04(01)	5.0%
	Minimum	44-1.03	0.3%

* Indicates Level One controlling design criteria. A deviation from such is a design exception, and is subject to approval. See section 40-8.0

I-69 Section 6 Contract 5 Design Criteria
Route: Ramp - Line "Harding-WBEN-C"

INDOT (des.) #1801695

	DESIGN ELEMENT	INDIANA DESIGN MANUAL SECTION (2013 - English)	PROJECT-SPECIFIC CRITERIA DEFINITION
DESIGN CONTROLS	**Functional Classification**		Freeway Ramp (Service)
	INDOT Geometric Design Table	Ch. 48	Figure 48-5A
	Design Year Traffic, AADT (2045)	40-2.01	5,100
	Design Vehicle	Fig. 46-1E	IDV
	***Design Speed, mph**	Fig. 48-5A	Varies - See separate exhibit
	Access Control	Fig. 53-1	Full Control
	Level of Service	Fig. 53-1	Desirable: B; Minimum: C
CROSS SECTION ELEMENTS	**Travel Lane**		
	***Width**	48-5.02	16 ft
	Surface Type	Ch. 304	Asphalt / Concrete
	Shoulder		
	***Right Width Usable**	48-5.02	11 ft
	***Right Width Paved**	48-5.02	8 ft; 10 ft with barrier
	***Left Width Usable**	48-5.02	5 ft
	***Left Width Paved**	48-5.02	4 ft; 6 ft with barrier
	Cross Slope		
	***Travel Lane**	48-5.02	2%
	Shoulder	48-5.02	Right: 4%; Left: 2%
	Clear Zone Width	49-2.0	24 ft
	Side Slopes		
	Cut Foreslope	45-3.0	6:1
	Cut Ditch Width	45-3.0	4 ft
	Cut Backslope	45-3.0	4:1
	Fill	45-3.0	6:1 to Clear Zone; 3:1 max. to Toe
BRIDGES	**New or Reconstructed Bridges**		
	***Structural Capacity**	Ch. 403	N/A
	***Clear-Roadway Width**	45-4.01	N/A
	Existing Bridges to Remain in Place		
	***Structural Capacity**	Ch. 72	N/A
	***Clear-Roadway Width**	45-4.01	N/A
	***Vertical Clearance (Freeway Under)**		
	New or Replaced Overpassing Bridge	44-4.0	16.5 ft
	Existing Overpassing Bridge	44-4.0	N/A
	Sign Truss/Pedestrian Bridge	44-4.0	N/A
	Vertical Clearance, Freeway over Railroad	402-6.01	N/A
ALIGNMENT ELEMENTS	***Stopping Sight Distance**	42-1.0	Varies per curve DS - See Calculations
	Decision Sight Distance		
	Avoidance maneuver	42-2.0	Varies per curve DS - See Calculations
	***Minimum Radius, e=8%**	43-2.0	Varies per curve DS - See Calculations
	***Superelevation Rate**	48-5.03	emax= 8%
	***Horizontal Sight Distance**	43-4.0	Varies per curve DS - See Calculations
	***Vertical Curvature, K-value**		
	Crest	44-3.0	Varies per curve DS - See Calculations
	Sag	44-3.0	Varies per curve DS - See Calculations
	Vertical Grades		
	***Maximum**	48-5.04(01)	5.0%
	Minimum	44-1.03	0.3%

* Indicates Level One controlling design criteria. A deviation from such is a design exception, and is subject to approval. See section 40-8.0

I-69 Section 6 Contract 5 Design Criteria
Route: Ramp - Line "Harding-WBEX-C"

INDOT (des.) #1801695

	DESIGN ELEMENT	INDIANA DESIGN MANUAL SECTION (2013 - English)	PROJECT-SPECIFIC CRITERIA DEFINITION
DESIGN CONTROLS	**Functional Classification**		Freeway Ramp (Service)
	INDOT Geometric Design Table	Ch. 48	Figure 48-5A
	Design Year Traffic, AADT (2045)	40-2.01	9,600
	Design Vehicle	Fig. 46-1E	IDV
	***Design Speed, mph**	Fig. 48-5A	Varies - See separate exhibit
	Access Control	Fig. 53-1	Full Control
	Level of Service	Fig. 53-1	Desirable: B; Minimum: C
CROSS SECTION ELEMENTS	**Travel Lane**		
	***Width**	48-5.02	16 ft
	Surface Type	Ch. 304	Asphalt / Concrete
	Shoulder		
	***Right Width Usable**	48-5.02	11 ft
	***Right Width Paved**	48-5.02	8 ft; 10 ft with barrier
	***Left Width Usable**	48-5.02	5 ft
	***Left Width Paved**	48-5.02	4 ft; 6 ft with barrier
	Cross Slope		
	***Travel Lane**	48-5.02	2%
	Shoulder	48-5.02	Right: 4%; Left: 2%
	Clear Zone Width	49-2.0	24 ft
	Side Slopes		
	Cut Foreslope	45-3.0	6:1
	Cut Ditch Width	45-3.0	4 ft
	Cut Backslope	45-3.0	4:1
	Fill	45-3.0	6:1 to Clear Zone; 3:1 max. to Toe
ALIGNMENT ELEMENTS	***Stopping Sight Distance**	42-1.0	Varies per curve DS - See Calculations
	Decision Sight Distance		
	Avoidance maneuver	42-2.0	Varies per curve DS - See Calculations
	***Minimum Radius, e=8%**	43-2.0	Varies per curve DS - See Calculations
	***Superelevation Rate**	48-5.03	emax= 8%
	***Horizontal Sight Distance**	43-4.0	Varies per curve DS - See Calculations
	***Vertical Curvature, K-value**		
	Crest	44-3.0	Varies per curve DS - See Calculations
	Sag	44-3.0	Varies per curve DS - See Calculations
	Vertical Grades		
	***Maximum**	48-5.04(01)	5.0%
	Minimum	44-1.03	0.3%

* Indicates Level One controlling design criteria. A deviation from such is a design exception, and is subject to approval. See section 40-8.0

I-69 Section 6 Contract 5 Design Criteria
Route: Line "W Thompson Rd"

INDOT (des.) #1801695

	DESIGN ELEMENT	INDIANA DESIGN MANUAL SECTION (2013 - English)	PROJECT-SPECIFIC CRITERIA DEFINITION
DESIGN CONTROLS	**Functional Classification**	40-1.01	Urban Local Street (Suburban), 4R
	INDOT Geometric Design Table	Ch. 53	Figure 53-9
	Design Year Traffic, AADT (2045)	Fig. 40-4A	TBD
	Design Vehicle	Fig. 46-1E	IDV
	***Design Speed, mph**	Fig. 53-9	30 mph
	Access Control	Fig. 53-9	None
	Level of Service	Fig. 53-9	D
CROSS SECTION ELEMENTS	**Travel Lane**		
	***Width**	45-1.01	11 ft
	Surface Type	Ch. 304	Asphalt / Concrete
	***Curb Offset**	45-1.02	2 ft
	Shoulder		
	***Usable Width**	45-1.02	2 ft
	Surface Type	Ch. 304	Asphalt / Concrete
	Cross Slope		
	***Travel Lane**	45-1.01	2%
	Shoulder	45-1.02	2%
	Auxiliary Lanes		
	Lane Width	45-1.03	10 ft
	Curb Offset	45-1.03	2 ft
	Shoulder Width	45-1.03	2 ft
	Surface Type	Ch. 304	Asphalt / Concrete
	Parking-Lane Width	45-1.04	N/A
	Sidewalk Width	45-1.06	N/A
	Bicycle-Lane Width	51-7.0	N/A
	Clear Zone Width	49-2.0	16 ft
	Typical Curbing Type, where used	45-1.05	Vertical
	Side Slopes (Uncurbed)		
	Cut Foreslope	45-3.0	3:1 Max
	Cut Ditch Width	45-3.0	0 ft
	Cut Backslope	45-3.0	3:1 Max
	Fill	45-3.0	3:1 Max
	Side Slopes (Curbed)		
	Cut Backslope	45-3.0	
	Fill	45-3.0	12:1 for 12 ft; 3:1 Max to Toe
ALIGNMENT ELEMENTS	***Stopping Sight Distance**	42-1.0	200 ft
	Decision Sight Distance		
	Avoidance maneuver	42-2.0	U: 620 ft; SU: 535 ft
	Stop Maneuver	42-2.0	490 ft
	Intersection Sight Distance	46-10.0	P: 330 ft; SUT: 420 ft
	***Minimum Radius, e=8%**	43-2.0	250 ft
	***Superelevation Rate**	43-3.0	emax= 4%
	***Horizontal Sight Distance**	43-4.0	200 ft
	***Vertical Curvature, K-value**		
	Crest	44-3.0	29
	Sag	44-3.0	37
	Vertical Grades		
	***Maximum**	44-1.02	Level: 10%
	Minimum	44-1.03	Des: 0.5%; Min: 0.3% (Curbed) 0.0% (Uncurbed)

* Indicates Level One controlling design criteria. A deviation from such is a design exception, and is subject to approval. See section 40-8.0

I-69 Section 6 Contract 5 Design Criteria
Route: Line "Harding Ct"

INDOT (des.) #1801695

	DESIGN ELEMENT	INDIANA DESIGN MANUAL SECTION (2013 - English)	PROJECT-SPECIFIC CRITERIA DEFINITION
DESIGN CONTROLS	**Functional Classification**	40-1.01	Urban Local Street (Intermediate), 4R
	INDOT Geometric Design Table	Ch. 53	Figure 53-9
	Design Year Traffic, AADT (2045)	Fig. 40-4A	7,500
	Design Vehicle	Fig. 46-1E	IDV
	***Design Speed, mph**	Fig. 53-9	30 mph
	Access Control	Fig. 53-9	None
	Level of Service	Fig. 53-9	D
CROSS SECTION ELEMENTS	**Travel Lane**		
	***Width**	45-1.01	11 ft
	Surface Type	Ch. 304	Asphalt / Concrete
	***Curb Offset**	45-1.02	2 ft
	Shoulder		
	***Usable Width**	45-1.02	2 ft
	Surface Type	Ch. 304	Asphalt / Concrete
	Cross Slope		
	***Travel Lane**	45-1.01	2%
	Shoulder	45-1.02	2%
	Auxiliary Lanes		
	Lane Width	45-1.03	10 ft
	Curb Offset	45-1.03	2 ft
	Shoulder Width	45-1.03	2 ft
	Surface Type	Ch. 304	Asphalt / Concrete
	Parking-Lane Width	45-1.04	N/A
	Sidewalk Width	45-1.06	N/A
	Bicycle-Lane Width	51-7.0	N/A
	Clear Zone Width	49-2.0	16 ft
	Typical Curbing Type, where used	45-1.05	Vertical
	Side Slopes (Uncurbed)		
	Cut Foreslope	45-3.0	3:1 Max
	Cut Ditch Width	45-3.0	0 ft
	Cut Backslope	45-3.0	3:1 Max
	Fill	45-3.0	3:1 Max
	Side Slopes (Curbed)		
	Cut Backslope	45-3.0	
	Fill	45-3.0	12:1 for 12 ft; 3:1 Max to Toe
ALIGNMENT ELEMENTS	***Stopping Sight Distance**	42-1.0	200 ft
	Decision Sight Distance		
	Avoidance maneuver	42-2.0	U: 620 ft; SU: 535 ft
	Stop Maneuver	42-2.0	490 ft
	Intersection Sight Distance	46-10.0	P: 330 ft; SUT: 420 ft
	***Minimum Radius, e=8%**	43-2.0	260 ft
	***Superelevation Rate**	43-3.0	emax= 4%
	***Horizontal Sight Distance**	43-4.0	200 ft
	***Vertical Curvature, K-value**		
	Crest	44-3.0	29
	Sag	44-3.0	37
	Vertical Grades		
	***Maximum**	44-1.02	Level: 10%
	Minimum	44-1.03	Des: 0.5%; Min: 0.3% (Curbed) 0.0% (Uncurbed)

* Indicates Level One controlling design criteria. A deviation from such is a design exception, and is subject to approval. See section 40-8.0

I-69 Section 6 Contract 5 Design Criteria
Route: Ramp - Line "PR-31 WBEN-C"

INDOT (des.) #1801695

	DESIGN ELEMENT	INDIANA DESIGN MANUAL SECTION (2013 - English)	PROJECT-SPECIFIC CRITERIA DEFINITION
DESIGN CONTROLS	**Functional Classification**		Freeway Ramp (Service)
	INDOT Geometric Design Table	Ch. 48	Figure 48-5A
	Design Year Traffic, AADT (2045)	40-2.01	TBD
	Design Vehicle	Fig. 46-1E	IDV
	***Design Speed, mph**	Fig. 48-5A	Varies - See separate exhibit
	Access Control	Fig. 53-1	Full Control
	Level of Service	Fig. 53-1	Desirable: B; Minimum: C
CROSS SECTION ELEMENTS	**Travel Lane**		
	***Width**	48-5.02	16 ft
	Surface Type	Ch. 304	e oth
	Shoulder		
	***Right Width Usable**	48-5.02	11 ft
	***Right Width Paved**	48-5.02	8 ft; 10 ft with barrier
	***Left Width Usable**	48-5.02	5 ft
	***Left Width Paved**	48-5.02	4 ft; 6 ft with barrier
	Cross Slope		
	***Travel Lane**	48-5.02	2%
	Shoulder	48-5.02	Right: 4%; Left: 2%
	Clear Zone Width	49-2.0	24 ft
	Side Slopes		
	Cut Foreslope	45-3.0	6:1
	Cut Ditch Width	45-3.0	4 ft
	Cut Backslope	45-3.0	4:1
	Fill	45-3.0	6:1 to Clear Zone; 3:1 max. to Toe
ALIGNMENT ELEMENTS	***Stopping Sight Distance**	42-1.0	Varies per curve DS - See Calculations
	Decision Sight Distance		
	Avoidance maneuver	42-2.0	Varies per curve DS - See Calculations
	***Minimum Radius, e=8%**	43-2.0	Varies per curve DS - See Calculations
	***Superelevation Rate**	48-5.03	emax= 8%
	***Horizontal Sight Distance**	43-4.0	Varies per curve DS - See Calculations
	***Vertical Curvature, K-value**		
	Crest	44-3.0	Varies per curve DS - See Calculations
	Sag	44-3.0	Varies per curve DS - See Calculations
	Vertical Grades		
	***Maximum**	48-5.04(01)	5.0%
	Minimum	44-1.03	0.3%

* Indicates Level One controlling design criteria. A deviation from such is a design exception, and is subject to approval. See section 40-8.0

I-69 Section 6 Contract 5 Design Criteria
Route: Bluff Road

INDOT (des.) #1801695

	DESIGN ELEMENT	INDIANA DESIGN MANUAL SECTION (2013 - English)	PROJECT-SPECIFIC CRITERIA DEFINITION
DESIGN CONTROLS	**Functional Classification**	40-1.01	Urban Arterial (Intermediate), 4R
	INDOT Geometric Design Table	Ch. 53	Figure 53-7
	Design Year Traffic, AADT (2045)	Fig. 40-4A	12,500
	Design Vehicle	Fig. 46-1E	N/A
	***Design Speed, mph**	Fig. 53-7	N/A
	Access Control	Fig. 53-7	N/A
	Level of Service	Fig. 53-7	N/A
CROSS SECTION ELEMENTS	**Travel Lane**		
	***Width**	45-1.01	N/A
	Surface Type	Ch. 304	N/A
	***Curb Offset**	45-1.02	N/A
	Shoulder		
	***Paved Width**	45-1.02	N/A
	Surface Type	Ch. 304	N/A
	Cross Slope		
	***Travel Lane**	45-1.01	N/A
	Shoulder	45-1.02	N/A
	Auxiliary Lanes		
	Lane Width	45-1.03	N/A
	Curb Offset	45-1.03	N/A
	Shoulder Width	45-1.03	N/A
	Surface Type	Ch. 304	N/A
	TWLTL Width	46-5.0	N/A
	Parking-Lane Width	45-1.04	N/A
	Sidewalk Width	45-1.06	N/A
	Bicycle-Lane Width	51-7.0	N/A
	Clear Zone Width	49-2.0	24 ft + 1 ft to front face of MSE walls
	Typical Curbing Type, where used	45-1.05	N/A
	Side Slopes (Uncurbed)		
	Cut Foreslope	45-3.0	N/A
	Cut Ditch Width	45-3.0	N/A
	Cut Backslope	45-3.0	N/A
	Fill	45-3.0	N/A
	Side Slopes (Curbed)		
	Cut Backslope	45-3.0	N/A
	Fill	45-3.0	N/A
BRIDGES	**New or Reconstructed Bridges**		
	***Structural Capacity**	Ch. 403	N/A
	***Clear-Roadway Width**	45-4.01	N/A
	Existing Bridges to Remain in Place		
	***Structural Capacity**	Ch. 72	N/A
	***Clear-Roadway Width**	45-4.0	N/A
	***Vertical Clearance (Arterial Under)**		
	New or Replaced Overpassing Bridge	44-4.0	16.5 ft
	Existing Overpassing Bridge	44-4.0	N/A
	Sign Truss/Pedestrian Bridge	44-4.0	N/A
	Vertical Clearance, Local over Railroad	402-6.01	N/A
ALIGNMENT ELEMENTS	***Stopping Sight Distance**	42-1.0	N/A
	Decision Sight Distance		
	Avoidance maneuver	42-2.0	N/A
	Stop Maneuver	42-2.0	N/A
	Intersection Sight Distance	46-10.0	P: 440 ft; SUT: 560 ft
	***Minimum Radius, e=8%**	43-2.0	N/A
	***Superelevation Rate**	43-3.0	N/A
	***Horizontal Sight Distance**	43-4.0	N/A
	***Vertical Curvature, K-value**		
	Crest	44-3.0	N/A
	Sag	44-3.0	N/A
	Vertical Grades		
	***Maximum**	44-1.02	N/A
	Minimum	44-1.03	N/A

* Indicates Level One controlling design criteria. A deviation from such is a design exception, and is subject to approval. See section 40-8.0

I-69 Section 6 Contract 5 Design Criteria
Route: Meridian Street

INDOT (des.) #1801695

	DESIGN ELEMENT	INDIANA DESIGN MANUAL SECTION (2013 - English)	PROJECT-SPECIFIC CRITERIA DEFINITION
DESIGN CONTROLS	**Functional Classification**	40-1.01	Urban Arterial (Intermediate), 4R
	INDOT Geometric Design Table	Ch. 53	Figure 53-7
	Design Year Traffic, AADT (2045)	Fig. 40-4A	21,500
	Design Vehicle	Fig. 46-1E	N/A
	***Design Speed, mph**	Fig. 53-7	N/A
	Access Control	Fig. 53-7	N/A
	Level of Service	Fig. 53-7	N/A
CROSS SECTION ELEMENTS	**Travel Lane**		
	***Width**	45-1.01	N/A
	Surface Type	Ch. 304	N/A
	***Curb Offset**	45-1.02	N/A
	Shoulder		
	***Paved Width**	45-1.02	N/A
	Surface Type	Ch. 304	N/A
	Cross Slope		
	***Travel Lane**	45-1.01	N/A
	Shoulder	45-1.02	N/A
	Auxiliary Lanes		
	Lane Width	45-1.03	N/A
	Curb Offset	45-1.03	N/A
	Shoulder Width	45-1.03	N/A
	Surface Type	Ch. 304	N/A
	TWLTL Width	46-5.0	N/A
	Parking-Lane Width	45-1.04	N/A
	Sidewalk Width	45-1.06	N/A
	Bicycle-Lane Width	51-7.0	N/A
	Clear Zone Width	49-2.0	24 ft + 1 ft to front face of MSE walls
	Typical Curbing Type, where used	45-1.05	N/A
	Side Slopes (Uncurbed)		
	Cut Foreslope	45-3.0	N/A
	Cut Ditch Width	45-3.0	N/A
	Cut Backslope	45-3.0	N/A
	Fill	45-3.0	N/A
	Side Slopes (Curbed)		
	Cut Backslope	45-3.0	N/A
	Fill	45-3.0	N/A
BRIDGES	**New or Reconstructed Bridges**		
	***Structural Capacity**	Ch. 403	N/A
	***Clear-Roadway Width**	45-4.01	N/A
	Existing Bridges to Remain in Place		
	***Structural Capacity**	Ch. 72	N/A
	***Clear-Roadway Width**	45-4.0	N/A
	***Vertical Clearance (Arterial Under)**		
	New or Replaced Overpassing Bridge	44-4.0	14.5 ft
	Existing Overpassing Bridge	44-4.0	N/A
	Sign Truss/Pedestrian Bridge	44-4.0	N/A
	Vertical Clearance, Local over Railroad	402-6.01	N/A
ALIGNMENT ELEMENTS	***Stopping Sight Distance**	42-1.0	N/A
	Decision Sight Distance		
	Avoidance maneuver	42-2.0	N/A
	Stop Maneuver	42-2.0	N/A
	Intersection Sight Distance	46-10.0	P: 440 ft; SUT: 560 ft
	***Minimum Radius, e=8%**	43-2.0	N/A
	***Superelevation Rate**	43-3.0	N/A
	***Horizontal Sight Distance**	43-4.0	N/A
	***Vertical Curvature, K-value**		
	Crest	44-3.0	N/A
	Sag	44-3.0	N/A
	Vertical Grades		
	***Maximum**	44-1.02	N/A
	Minimum	44-1.03	N/A

* Indicates Level One controlling design criteria. A deviation from such is a design exception, and is subject to approval. See section 40-8.0

I-69 Section 6 Contract 5 Design Criteria
Route: "Line PR-A2"

INDOT (des.) #1801695

	DESIGN ELEMENT	INDIANA DESIGN MANUAL SECTION (2013 - English)	PROJECT-SPECIFIC CRITERIA DEFINITION
DESIGN CONTROLS	**Functional Classification**	40-1.01	Freeway, 4R (Urban)
	INDOT Geometric Design Table	Ch. 53	Figure 53-1
	Design Year Traffic, AADT (2045)	Fig. 40-2A	South of Southport: 78,200 North of Southport: 91,100
	Design Vehicle	Fig. 46-1E	IDV
	***Design Speed, mph**	Fig. 53-1	70 mph
	Access Control	Fig. 53-1	Full Control
	Level of Service	Fig. 53-1	Desirable: B; Minimum: C
CROSS SECTION ELEMENTS	**Travel Lane**		
	***Width**	45-1.01	12 ft
	Surface Type	Ch. 304	Asphalt / Concrete
	Shoulder		
	***Right Width Usable**	45-1.02	13 ft
	***Right Width Paved**	45-1.02	12 ft; 14 ft with barrier
	***Left Width Paved**	45-1.02	14 ft
	Surface Type	Ch. 304	Asphalt / Concrete
	Cross Slope		
	***Travel Lane**	45-1.01	2%
	Shoulder	45-1.02	4%
	Auxiliary Lanes		
	***Lane Width**	45-1.03	12 ft
	***Shoulder Width**	45-1.03	12 ft
	Median Width		
	Depressed	45-2.0	50 ft
	Flush, with CMB	45-2.0	26.5 ft
	Clear Zone Width	49-2.0	30 ft min + 1 ft to front face of MSE Walls
	Side Slopes		
	Cut Foreslope	45-3.0	6:1
	Cut Ditch Width	45-3.0	4 ft
	Cut Backslope	45-3.0	4:1 for 20 ft., then 3:1 max
	Fill	45-3.0	6:1 to Clear Zone; 3:1 max. to Toe
	Median Slopes	45-2.02	6:1
BRIDGES	**New or Reconstructed Bridges**		
	***Structural Capacity**	Ch. 403	HL-93
	***Clear-Roadway Width**	45-4.01	11.875 ft Lt + Travel Way + 13.667 ft Rt
	Existing Bridges to Remain in Place		
	***Structural Capacity**	Ch. 72	N/A
	***Clear-Roadway Width**	45-4.01	N/A
	***Vertical Clearance (Freeway Under)**		
	New or Replaced Overpassing Bridge	44-4.0	16.5 ft
	Existing Overpassing Bridge	44-4.0	N/A
	Sign Truss/Pedestrian Bridge	44-4.0	N/A
	Vertical Clearance, Freeway over Railroad	402-6.01	N/A
ALIGNMENT ELEMENTS	***Stopping Sight Distance**	42-1.0	730 ft
	Decision Sight Distance		
	Avoidance maneuver B	42-2.0	1445 ft
	***Minimum Radius, e=8%**	43-2.0	1810 ft
	***Superelevation Rate**	43-3.0	e_{max}= 8%
	***Horizontal Sight Distance**	43-4.0	730 ft
	***Vertical Curvature, K-value**		
	Crest	44-3.0	312
	Sag	44-3.0	181
	Vertical Grades		
	***Maximum**	44-1.02	Level: 3%
	Minimum	44-1.03	Desirable: 0.5%, Minimum: 0.3%

* Indicates Level One controlling design criteria. A deviation from such is a design exception, and is subject to approval. See section 40-8.0

I-69 Section 6 Contract 5 Design Criteria
Route: Line "PR-Epler"

INDOT (des.) #1801695

	DESIGN ELEMENT	INDIANA DESIGN MANUAL SECTION (2013 - English)	PROJECT-SPECIFIC CRITERIA DEFINITION
DESIGN CONTROLS	**Functional Classification**	40-1.01	Urban Principal Arterial (Intermediate), 3R
	INDOT Geometric Design Table	Ch. 55	Figure 55-3E
	Design Year Traffic, AADT (2045)	Fig. 40-2A	12,100
	Design Vehicle	Fig. 46-1E	IDV
	***Design Speed, mph**	Fig. 55-3E	45 mph
	Access Control	Fig. 55-3E	None
	Level of Service	Fig. 55-3E	Desirable: C; Minimum: D
CROSS SECTION ELEMENTS	**Travel Lane**		
	***Width**	55-4.05	12 ft
	Surface Type	Ch. 304	Asphalt / Concrete
	***Curb Offset**	55-4.05	2 ft
	Shoulder		
	***Paved Width**	55-4.05	2 ft
	Surface Type	Ch. 304	Asphalt / Concrete
	Cross Slope		
	***Travel Lane**	55-4.05	2%
	Shoulder	55-4.05	2%
	Auxiliary Lanes		
	Lane Width	55-4.05	12 ft
	Curb Offset	55-4.05	2 ft
	Shoulder Width	55-4.05	2 ft
	Surface Type	Ch. 304	Asphalt / Concrete
	TWLTL Width	46-5.0	N/A
	Parking-Lane Width	45-1.04	N/A
	Sidewalk Width	45-1.06	6 ft
	Bicycle-Lane Width	51-7.0	N/A
	Obstruction Free Zone	55-5.02	2.5 ft
	Typical Curbing Type, where used	55-5.0	Vertical
	Side Slopes (Uncurbed)		
	Cut Foreslope	55-5.0	2:1 or flatter
	Cut Ditch Width	55-5.0	Match Existing
	Cut Backslope	55-5.0	2:1 or flatter
	Fill	55-5.0	2:1 or flatter
	Side Slopes (Curbed)		
	Cut Backslope	55-4.05	6 ft shelf; 1 ft to toe of slope
	Fill	55-4.05	2:1 or flatter
BRIDGES	**New or Reconstructed Bridges**		
	***Structural Capacity**	Ch. 403	N/A
	***Clear-Roadway Width**	55-6.03	N/A
	Existing Bridges to Remain in Place		
	***Structural Capacity**	Ch. 72	N/A
	***Clear-Roadway Width**	55-6.02	N/A
	***Vertical Clearance (Freeway Under)**		
	New or Replaced Overpassing Bridge	44-4.0	16.5 ft
	Existing Overpassing Bridge	44-4.0	N/A
	Sign Truss/Pedestrian Bridge	44-4.0	N/A
	Vertical Clearance, Freeway over Railroad	402-6.01	N/A
ALIGNMENT ELEMENTS	***Stopping Sight Distance**	55-4.02	360 ft
	Decision Sight Distance		
	Avoidance maneuver	42-2.0	U: 930 ft; SU: 800 ft
	Stop Maneuver	42-2.0	800 ft
	Intersection Sight Distance	55-4.06	P: 530 ft; SUT: 675 ft
	***Minimum Radius, e=8%**	55-4.03	e_{max}= 8%
	***Superelevation Rate**	55-4.03	Varies - See separate exhibit
	***Horizontal Sight Distance**	55-4.03	360 ft
	***Vertical Curvature, K-value**		
	Crest	55-4.04	61
	Sag	55-4.04	79
	Vertical Grades		
	***Maximum**	55-4.04	Level: 8.5%
	Minimum	44-1.03	Curb Des: 0.5%; Curb Min: 0.3%; Uncurbed: 0%

* Indicates Level One controlling design criteria. A deviation from such is a design exception, and is subject to approval. See section 40-8.0

I-69 Section 6 Contract 5 Design Criteria
Route: Ramp - Line "Epler-NBEX-C"

INDOT (des.) #1801695

	DESIGN ELEMENT	INDIANA DESIGN MANUAL SECTION (2013 - English)	PROJECT-SPECIFIC CRITERIA DEFINITION
DESIGN CONTROLS	**Functional Classification**		Freeway Ramp (Service)
	INDOT Geometric Design Table	Ch. 48	Figure 48-5A
	Design Year Traffic, AADT (2045)	40-2.01	6,100
	Design Vehicle	Fig. 46-1E	IDV
	***Design Speed, mph**	Fig. 48-5A	Varies - See separate exhibit
	Access Control	Fig. 53-1	Full Control
	Level of Service	Fig. 53-1	Desirable: B; Minimum: C
CROSS SECTION ELEMENTS	**Travel Lane**		
	***Width**	48-5.02	16 ft
	Surface Type	Ch. 304	Asphalt / Concrete
	Shoulder		
	***Right Width Usable**	48-5.02	9 ft
	***Right Width Paved**	48-5.02	8 ft; 10 ft with barrier
	***Left Width Usable**	48-5.02	5 ft
	***Left Width Paved**	48-5.02	4 ft; 6 ft with barrier
	Cross Slope		
	***Travel Lane**	48-5.02	2%
	Shoulder	48-5.02	Right: 4%; Left: 2%
	Clear Zone Width	49-2.0	Varies
	Side Slopes		
	Cut Foreslope	45-3.0	6:1
	Cut Ditch Width	45-3.0	4 ft
	Cut Backslope	45-3.0	4:1
	Fill	45-3.0	6:1 to Clear Zone; 3:1 max. to Toe
ALIGNMENT ELEMENTS	***Stopping Sight Distance**	42-1.0	Varies per curve DS - See Calculations
	Decision Sight Distance		
	Avoidance maneuver	42-2.0	Varies per curve DS - See Calculations
	***Minimum Radius, e=8%**	43-2.0	Varies per curve DS - See Calculations
	***Superelevation Rate**	48-5.03	e_{max}= 8%
	***Horizontal Sight Distance**	43-4.0	Varies per curve DS - See Calculations
	***Vertical Curvature, K-value**		
	Crest	44-3.0	Varies per curve DS - See Calculations
	Sag	44-3.0	Varies per curve DS - See Calculations
	Vertical Grades		
	***Maximum**	48-5.04(01)	5.0%
	Minimum	44-1.03	0.3%

* Indicates Level One controlling design criteria. A deviation from such is a design exception, and is subject to approval. See section 40-8.0

I-69 Section 6 Contract 5 Design Criteria
Route: Ramp - Line "Epler-SBEN-C"

INDOT (des.) #1801695

	DESIGN ELEMENT	INDIANA DESIGN MANUAL SECTION (2013 - English)	PROJECT-SPECIFIC CRITERIA DEFINITION
DESIGN CONTROLS	**Functional Classification**		Freeway Ramp (Service)
	INDOT Geometric Design Table	Ch. 48	Figure 48-5A
	Design Year Traffic, AADT (2045)	40-2.01	5,000
	Design Vehicle	Fig. 46-1E	IDV
	***Design Speed, mph**	Fig. 48-5A	Varies - See separate exhibit
	Access Control	Fig. 53-1	Full Control
	Level of Service	Fig. 53-1	Desirable: B; Minimum: C
CROSS SECTION ELEMENTS	**Travel Lane**		
	***Width**	48-5.02	16 ft
	Surface Type	Ch. 304	Asphalt / Concrete
	Shoulder		
	***Right Width Usable**	48-5.02	9 ft
	***Right Width Paved**	48-5.02	8 ft; 10 ft with barrier
	***Left Width Usable**	48-5.02	5 ft
	***Left Width Paved**	48-5.02	4 ft; 6 ft with barrier
	Cross Slope		
	***Travel Lane**	48-5.02	2%
	Shoulder	48-5.02	Right: 4%; Left: 2%
	Clear Zone Width	49-2.0	Varies
	Side Slopes		
	Cut Foreslope	45-3.0	6:1
	Cut Ditch Width	45-3.0	4 ft
	Cut Backslope	45-3.0	4:1
	Fill	45-3.0	6:1 to Clear Zone; 3:1 max. to Toe
ALIGNMENT ELEMENTS	***Stopping Sight Distance**	42-1.0	Varies per curve DS - See Calculations
	Decision Sight Distance		
	Avoidance maneuver	42-2.0	Varies per curve DS - See Calculations
	***Minimum Radius, e=8%**	43-2.0	Varies per curve DS - See Calculations
	***Superelevation Rate**	48-5.03	e_{max}= 8%
	***Horizontal Sight Distance**	43-4.0	Varies per curve DS - See Calculations
	***Vertical Curvature, K-value**		
	Crest	44-3.0	Varies per curve DS - See Calculations
	Sag	44-3.0	Varies per curve DS - See Calculations
	Vertical Grades		
	***Maximum**	48-5.04(01)	5.0%
	Minimum	44-1.03	0.3%

* Indicates Level One controlling design criteria. A deviation from such is a design exception, and is subject to approval. See section 40-8.0

I-69 Section 6 Contract 5 Design Criteria
Route: Line "PR-Epler Connection-C" - Epler Avenue East

INDOT (des.) #1801695

	DESIGN ELEMENT	INDIANA DESIGN MANUAL SECTION (2013 - English)	PROJECT-SPECIFIC CRITERIA DEFINITION
DESIGN CONTROLS	**Functional Classification**	40-1.01	Urban Collector (Built-Up), 3R
	INDOT Geometric Design Table	Ch. 55	Figure 55-3G
	Design Year Traffic, AADT (2045)	Fig. 40-2A	3,330
	Design Vehicle	Fig. 46-1E	IDV
	***Design Speed, mph**	Fig. 55-3G	30 mph
	Access Control	Fig. 55-3G	None
	Level of Service	Fig. 55-3G	Desirable: C; Minimum: D
CROSS SECTION ELEMENTS	**Travel Lane**		
	***Width**	55-4.05	12 ft
	Surface Type	Ch. 304	Asphalt / Concrete
	***Curb Offset**	55-4.05	2 ft
	Shoulder		
	***Paved Width**	55-4.05	2 ft
	Surface Type	Ch. 304	Asphalt / Concrete
	Cross Slope		
	***Travel Lane**	55-4.05	2%
	Shoulder	55-4.05	2%
	Auxiliary Lanes		
	Lane Width	55-4.05	12 ft
	Curb Offset	55-4.05	2 ft
	Shoulder Width	55-4.05	2 ft
	Surface Type	Ch. 304	Asphalt / Concrete
	TWLTL Width	46-5.0	N/A
	Parking-Lane Width	45-1.04	N/A
	Sidewalk Width	45-1.06	N/A
	Bicycle-Lane Width	51-7.0	N/A
	Obstruction Free Zone	55-5.02	2.5 ft
	Typical Curbing Type, where used	55-5.0	Vertical
	Side Slopes (Uncurbed)		
	Cut Foreslope	55-5.0	N/A
	Cut Ditch Width	55-5.0	N/A
	Cut Backslope	55-5.0	N/A
	Fill	55-5.0	N/A
	Side Slopes (Curbed)		
	Cut Backslope	55-4.05	6 ft shelf; 1 ft to toe of slope
	Fill	55-4.05	2:1 or flatter
ALIGNMENT ELEMENTS	***Stopping Sight Distance**	55-4.02	200 ft
	Decision Sight Distance		
	Avoidance maneuver	42-2.0	U: 620 ft; SU: 535 ft
	Stop Maneuver	42-2.0	490 ft
	Intersection Sight Distance	55-4.06	P: 330 ft; SUT: 420 ft
	***Minimum Radius, e=8%**	55-4.03	emax= 8%
	***Superelevation Rate**	55-4.03	Varies - See separate exhibit
	***Horizontal Sight Distance**	55-4.03	200 ft
	***Vertical Curvature, K-value**		
	Crest	55-4.04	19
	Sag	55-4.04	37
	Vertical Grades		
	***Maximum**	55-4.04	Level: 11%
	Minimum	44-1.03	Curb Des: 0.5%; Curb Min: 0.3%; Uncurbed: 0%

* Indicates Level One controlling design criteria. A deviation from such is a design exception, and is subject to approval. See section 40-8.0

I-69 Section 6 Contract 5 Design Criteria
Route: Line "PR-Kopetsky Dr-C"

INDOT (des.) #1801695

	DESIGN ELEMENT	INDIANA DESIGN MANUAL SECTION (2013 - English)	PROJECT-SPECIFIC CRITERIA DEFINITION
DESIGN CONTROLS	**Functional Classification**	40-1.01	Urban Local Street (Built-Up), 4R
	INDOT Geometric Design Table	Ch. 53	Figure 53-9
	Design Year Traffic, AADT (2045)	Fig. 40-2A	1,400
	Design Vehicle	Fig. 46-1E	IDV
	***Design Speed, mph**	Fig. 53-9	30 mph
	Access Control	Fig. 53-9	None
	Level of Service	Fig. 53-9	D
CROSS SECTION ELEMENTS	**Travel Lane**		
	***Width**	45-1.01	12 ft
	Surface Type	Ch. 304	Asphalt / Concrete
	***Curb Offset**	45-1.02	2 ft
	Shoulder		
	***Usable Width**	45-1.02	2 ft
	Surface Type	Ch. 304	Asphalt / Concrete
	Cross Slope		
	***Travel Lane**	45-1.01	2%
	Shoulder	45-1.02	2%
	Auxiliary Lanes		
	Lane Width	45-1.03	10 ft
	Curb Offset	45-1.03	2 ft
	Shoulder Width	45-1.03	2 ft
	Surface Type	Ch. 304	Asphalt / Concrete
	Parking-Lane Width	45-1.04	N/A
	Sidewalk Width	45-1.06	N/A
	Bicycle-Lane Width	51-7.0	N/A
	Clear Zone Width	49-2.0	16 ft
	Typical Curbing Type, where used	45-1.05	Vertical
	Side Slopes (Uncurbed)		
	Cut Foreslope	45-3.0	N/A
	Cut Ditch Width	45-3.0	N/A
	Cut Backslope	45-3.0	N/A
	Fill	45-3.0	N/A
	Side Slopes (Curbed)		
	Cut Backslope	45-3.0	6 ft shelf; 1 ft to toe of slope
	Fill	45-3.0	12:1 for 12 ft; 3:1 Max to Toe
ALIGNMENT ELEMENTS	***Stopping Sight Distance**	42-1.0	200 ft
	Decision Sight Distance		
	Avoidance maneuver	42-2.0	U: 620 ft; SU: 535 ft
	Stop Maneuver	42-2.0	490 ft
	Intersection Sight Distance	46-10.0	P: 330 ft; SUT: 420 ft
	***Minimum Radius, e=8%**	43-2.0	260 ft
	***Superelevation Rate**	43-3.0	emax= 4%
	***Horizontal Sight Distance**	43-4.0	200 ft
	***Vertical Curvature, K-value**		
	Crest	44-3.0	29
	Sag	44-3.0	37
	Vertical Grades		
	***Maximum**	44-1.02	Level: 10%
	Minimum	44-1.03	Des: 0.5%; Min: 0.3% (Curbed) 0.0% (Uncurbed)

* Indicates Level One controlling design criteria. A deviation from such is a design exception, and is subject to approval. See section 40-8.0

I-69 Section 6 Contract 5 Design Criteria
Route: Ramp "Southport NBEN-C"

INDOT (des.) #1801695

	DESIGN ELEMENT	INDIANA DESIGN MANUAL SECTION (2013 - English)	PROJECT-SPECIFIC CRITERIA DEFINITION
DESIGN CONTROLS	**Functional Classification**		Freeway Ramp (Service)
	INDOT Geometric Design Table	Ch. 48	Figure 48-5A
	Design Year Traffic, AADT (2045)	40-2.01	12,000
	Design Vehicle	Fig. 46-1E	IDV
	***Design Speed, mph**	Fig. 48-5A	40-60 mph
	Access Control	Fig. 53-1	Full Control
	Level of Service	Fig. 53-1	C
CROSS SECTION ELEMENTS	**Travel Lane**		
	***Width**	48-5.02	16 ft
	Surface Type	Ch. 304	Asphalt / Concrete
	Shoulder		
	***Right Width Usable**	48-5.02	9 ft
	***Right Width Paved**	48-5.02	8 ft
	***Left Width Usable**	48-5.02	5 ft
	***Left Width Paved**	48-5.02	4 ft
	with Guardrail\Barrier	49-5.0	Paved +2 ft
	Cross Slope		
	***Travel Lane**	48-5.02	2%
	Shoulder	48-5.02	Right: 4%; Left: 2%
	Clear Zone Width	49-2.0	Varies; 16 ft - 30 ft
	Side Slopes		
	Cut Foreslope	45-3.0	6:1
	Cut Ditch Width	45-3.0	4 ft
	Cut Backslope	45-3.0	4:1
	Fill	45-3.0	6:1 to Clear Zone; 3:1 max. to Toe
	Median Slopes	45-2.02	N/A
BRIDGES	**New or Reconstructed Bridges**		
	***Structural Capacity**	Ch. 403	HL-93
	***Clear-Roadway Width**	45-4.01	5.667 ft Lt + Travel Way + 9.667 ft Rt
	Existing Bridges to Remain in Place		
	***Structural Capacity**	Ch. 72	N/A
	***Clear-Roadway Width**	45-4.01	N/A
	***Vertical Clearance (Freeway Under)**		
	New or Replaced Overpassing Bridge	44-4.0	N/A
	Existing Overpassing Bridge	44-4.0	N/A
	Sign Truss/Pedestrian Bridge	44-4.0	N/A
	Vertical Clearance, Freeway over Railroad	402-6.01	N/A
ALIGNMENT ELEMENTS	***Stopping Sight Distance**	42-1.0	40 mph - 305 ft; 60mph - 570 ft
	Decision Sight Distance		
	Avoidance maneuver B	42-2.0	40 mph - 690 ft; 60mph - 1150 ft
	***Minimum Radius, e=8%**	43-2.0	960 ft
	***Superelevation Rate**	48-5.03	8%
	***Horizontal Sight Distance**	43-4.0	40 mph - 305 ft; 60mph - 570 ft
	***Vertical Curvature, K-value (Min)**		
	Crest	44-3.0	40 mph - 61; 60 mph - 193; 70 mph - 312
	Sag	44-3.0	40 mph -64; 60 mph - 136; 70 mph - 181
	Vertical Grades		
	***Maximum**	48-5.04	5.0%
	Minimum	44-1.03	0.3%

* Indicates Level One controlling design criteria. A deviation from such is a design exception, and is subject to approval. See section 40-8.0

I-69 Section 6 Contract 5 Design Criteria
Route: Ramp "Southport NBEX-C"

INDOT (des.) #1801695

	DESIGN ELEMENT	INDIANA DESIGN MANUAL SECTION (2013 - English)	PROJECT-SPECIFIC CRITERIA DEFINITION
DESIGN CONTROLS	**Functional Classification**		Freeway Ramp (Service)
	INDOT Geometric Design Table	Ch. 48	Figure 48-5A
	Design Year Traffic, AADT (2045)	40-2.01	5,000
	Design Vehicle	Fig. 46-1E	IDV
	***Design Speed, mph**	Fig. 48-5A	
	Access Control	Fig. 53-1	Full Control
	Level of Service	Fig. 53-1	C
CROSS SECTION ELEMENTS	**Travel Lane**		
	***Width**	48-5.02	16 ft
	Surface Type	Ch. 304	Asphalt / Concrete
	Shoulder		
	***Right Width Usable**	48-5.02	9 ft
	***Right Width Paved**	48-5.02	8 ft
	***Left Width Usable**	48-5.02	5 ft
	***Left Width Paved**	48-5.02	4 ft
	with Guardrail\Barrier	49-5.0	Paved +2 ft
	Cross Slope		
	***Travel Lane**	48-5.02	2%
	Shoulder	48-5.02	Right: 4%; Left: 2%
	Clear Zone Width	49-2.0	Varies; 26 ft - 12 ft
	Side Slopes		
	Cut Foreslope	45-3.0	6:1
	Cut Ditch Width	45-3.0	4 ft
	Cut Backslope	45-3.0	4:1
	Fill	45-3.0	6:1 to Clear Zone; 3:1 max. to Toe
	Median Slopes	45-2.02	N/A
ALIGNMENT ELEMENTS	***Stopping Sight Distance**	42-1.0	40 mph - 305 ft; 60mph - 570 ft
	Decision Sight Distance		
	Avoidance maneuver B	42-2.0	40 mph - 690 ft; 60mph - 1150 ft
	***Minimum Radius, e=8%**	43-2.0	960 ft
	***Superelevation Rate**	48-5.03	8%
	***Horizontal Sight Distance**	43-4.0	40 mph - 305 ft; 60mph - 570 ft
	***Vertical Curvature, K-value (Min)**		
	Crest	44-3.0	40 mph - 61; 60 mph - 193; 70 mph - 312
	Sag	44-3.0	40 mph -64; 60 mph - 136; 70 mph - 181
	Vertical Grades		
	***Maximum**	48-5.04	5.0%
	Minimum	44-1.03	0.3%

* Indicates Level One controlling design criteria. A deviation from such is a design exception, and is subject to approval. See section 40-8.0

I-69 Section 6 Contract 5 Design Criteria
Route: Ramp "Southport SBEN-C"

INDOT (des.) #1801695

	DESIGN ELEMENT	INDIANA DESIGN MANUAL SECTION (2013 - English)	PROJECT-SPECIFIC CRITERIA DEFINITION
DESIGN CONTROLS	**Functional Classification**		Freeway Ramp (Service)
	INDOT Geometric Design Table	Ch. 48	Figure 48-5A
	Design Year Traffic, AADT (2045)	40-2.01	4,100
	Design Vehicle	Fig. 46-1E	IDV
	***Design Speed, mph**	Fig. 48-5A	
	Access Control	Fig. 53-1	Full Control
	Level of Service	Fig. 53-1	C
CROSS SECTION ELEMENTS	**Travel Lane**		
	***Width**	48-5.02	16 ft
	Surface Type	Ch. 304	Asphalt / Concrete
	Shoulder		
	***Right Width Usable**	48-5.02	9 ft
	***Right Width Paved**	48-5.02	8 ft
	***Left Width Usable**	48-5.02	5 ft
	***Left Width Paved**	48-5.02	4 ft
	with Guardrail\Barrier	49-5.0	Paved +2 ft
	Cross Slope		
	***Travel Lane**	48-5.02	2%
	Shoulder	48-5.02	Right: 4%; Left: 2%
	Clear Zone Width	49-2.0	Varies; 26 ft - 12 ft
	Side Slopes		
	Cut Foreslope	45-3.0	6:1
	Cut Ditch Width	45-3.0	4 ft
	Cut Backslope	45-3.0	4:1
	Fill	45-3.0	6:1 to Clear Zone; 3:1 max. to Toe
	Median Slopes	45-2.02	N/A
ALIGNMENT ELEMENTS	***Stopping Sight Distance**	42-1.0	40 mph - 305 ft; 60mph - 570 ft
	Decision Sight Distance		
	Avoidance maneuver B	42-2.0	40 mph - 690 ft; 60mph - 1150 ft
	***Minimum Radius, e=8%**	43-2.0	960 ft
	***Superelevation Rate**	48-5.03	8%
	***Horizontal Sight Distance**	43-4.0	40 mph - 305 ft; 60mph - 570 ft
	***Vertical Curvature, K-value (min)**		
	Crest	44-3.0	40 mph - 61; 60 mph - 193; 70 mph - 312
	Sag	44-3.0	40 mph -64; 60 mph - 136; 70 mph - 181
	Vertical Grades		
	***Maximum**	48-5.04	5.0%
	Minimum	44-1.03	0.3%

* Indicates Level One controlling design criteria. A deviation from such is a design exception, and is subject to approval. See section 40-8.0

I-69 Section 6 Contract 5 Design Criteria
Route: Ramp "Southport SBEX-C"

INDOT (des.) #1801695

	DESIGN ELEMENT	INDIANA DESIGN MANUAL SECTION (2013 - English)	PROJECT-SPECIFIC CRITERIA DEFINITION
DESIGN CONTROLS	**Functional Classification**		Freeway Ramp (Service)
	INDOT Geometric Design Table	Ch. 48	Figure 48-5A
	Design Year Traffic, AADT (2045)	40-2.01	10,400
	Design Vehicle	Fig. 46-1E	IDV
	***Design Speed, mph**	Fig. 48-5A	
	Access Control	Fig. 53-1	Full Control
	Level of Service	Fig. 53-1	C
CROSS SECTION ELEMENTS	**Travel Lane**		
	***Width**	48-5.02	16 ft
	Surface Type	Ch. 304	Asphalt / Concrete
	Shoulder		
	***Right Width Usable**	48-5.02	9 ft
	***Right Width Paved**	48-5.02	8 ft
	***Left Width Usable**	48-5.02	5 ft
	***Left Width Paved**	48-5.02	4 ft
	with Guardrail\Barrier	49-5.0	Paved +2 ft
	Cross Slope		
	***Travel Lane**	48-5.02	2%
	Shoulder	48-5.02	Right: 4%; Left: 2%
	Clear Zone Width	49-2.0	Varies; 30 ft - 16 ft
	Side Slopes		
	Cut Foreslope	45-3.0	6:1
	Cut Ditch Width	45-3.0	4 ft
	Cut Backslope	45-3.0	4:1
	Fill	45-3.0	6:1 to Clear Zone; 3:1 max. to Toe
	Median Slopes	45-2.02	N/A
BRIDGES	**New or Reconstructed Bridges**		
	***Structural Capacity**	Ch. 403	HL-93
	***Clear-Roadway Width**	45-4.01	5.667 ft Lt + Travel Way + 9.667 ft Rt
	Existing Bridges to Remain in Place		
	***Structural Capacity**	Ch. 72	N/A
	***Clear-Roadway Width**	45-4.01	N/A
	***Vertical Clearance (Freeway Under)**		
	New or Replaced Overpassing Bridge	44-4.0	N/A
	Existing Overpassing Bridge	44-4.0	N/A
	Sign Truss/Pedestrian Bridge	44-4.0	N/A
	Vertical Clearance, Freeway over Railroad	402-6.01	N/A
ALIGNMENT ELEMENTS	***Stopping Sight Distance**	42-1.0	40 mph - 305 ft; 60mph - 570 ft
	Decision Sight Distance		
	Avoidance maneuver B	42-2.0	40 mph - 690 ft; 60mph - 1150 ft
	***Minimum Radius, e=8%**	43-2.0	960 ft
	***Superelevation Rate**	48-5.03	8%
	***Horizontal Sight Distance**	43-4.0	40 mph - 305 ft; 60mph - 570 ft
	***Vertical Curvature, K-value (min)**		
	Crest	44-3.0	40 mph - 61; 60 mph - 193; 70 mph - 312
	Sag	44-3.0	40 mph -64; 60 mph - 136; 70 mph - 181
	Vertical Grades		
	***Maximum**	48-5.04	5.0%
	Minimum	44-1.03	0.3%

* Indicates Level One controlling design criteria. A deviation from such is a design exception, and is subject to approval. See section 40-8.0

I-69 Section 6 Contract 5 Design Criteria
Route: Line "PR-Southport Road"

INDOT (des.) #1801695

	DESIGN ELEMENT	INDIANA DESIGN MANUAL SECTION (2013 - English)	PROJECT-SPECIFIC CRITERIA DEFINITION
DESIGN CONTROLS	**Functional Classification**	40-1.01	Urban Arterial (Built-Up), 4R
	INDOT Geometric Design Table	Ch. 53	Figure 53-6
	Design Year Traffic, AADT (2045)	Fig. 40-4A	30,000
	Design Vehicle	Fig. 46-1E	WB-62
	***Design Speed, mph**	Fig. 53-6	40 mph
	Access Control	Fig. 53-6	none
	Level of Service	Fig. 53-6	Desirable: C; Minimum: D
CROSS SECTION ELEMENTS	**Travel Lane**		
	***Width**	45-1.01	12 ft
	Surface Type	Ch. 304	Asphalt / Concrete
	***Curb Offset**	45-1.02	2 ft
	Shoulder		
	***Paved Width**	45-1.02	N/A
	Surface Type	Ch. 304	Asphalt / Concrete
	Cross Slope		
	***Travel Lane**	45-1.01	2%
	Shoulder	45-1.02	2%
	Auxiliary Lanes		
	Lane Width	45-1.03	12 ft
	Curb Offset	45-1.03	2 ft
	Shoulder Width	45-1.03	N/A
	Surface Type	Ch. 304	Asphalt / Concrete
	TWLTL Width	46-5.0	N/A
	Parking-Lane Width	45-1.04	N/A
	Sidewalk Width	45-1.06	6 ft
	Bicycle-Lane Width	51-7.0	N/A
	Clear-Zone Width	49-2.0	10 ft
	Typical Curbing Type, where used	45-1.05	Vertical
	Side Slopes (Uncurbed)		
	Cut Foreslope	45-3.0	
	Cut Ditch Width	45-3.0	
	Cut Backslope	45-3.0	
	Fill	45-3.0	
	Side Slopes (Curbed)		
	Cut Backslope	45-3.0	6 ft Shelf; 3:1 Max Toe of Slope 1' beyond sidewalk
	Fill	45-3.0	12:1 for 12 ft; 3:1 Max. to Toe
BRIDGES	**New or Reconstructed Bridges**		
	***Structural Capacity**	Ch. 403	HL-93
	***Clear-Roadway Width**	45-4.01	2 ft Lt + Travel Way + 10 ft path + 2 ft Rt
	Existing Bridges to Remain in Place		
	***Structural Capacity**	Ch. 72	N/A
	***Clear-Roadway Width**	45-4.01	N/A
	***Vertical Clearance (Freeway Under)**		
	New or Replaced Overpassing Bridge	44-4.0	16.5 ft
	Existing Overpassing Bridge	44-4.0	N/A
	Sign Truss/Pedestrian Bridge	44-4.0	N/A
	Vertical Clearance, Freeway over Railroad	402-6.01	N/A
ALIGNMENT ELEMENTS	***Stopping Sight Distance**	42-1.0	305 ft
	Decision Sight Distance		
	Avoidance maneuver	42-2.0	U: 825 ft; SU: 715 ft
	Stop Maneuver	42-2.0	690 ft
	Intersection Sight Distance	46-10.0	P: 440 ft; SUT: 560ft
	***Minimum Radius, e=4%/6%**	43-2.0	535 ft / 485 ft
	***Superelevation Rate**	43-3.0	4% / 6%
	***Horizontal Sight Distance**	43-4.0	305 ft
	***Vertical Curvature, K-value**		
	Crest	44-3.0	Des: 61
	Sag	44-3.0	64
	Vertical Grades		
	***Maximum**	44-1.02	Level: 6.5%, Rolling: 7.5%
	Minimum	44-1.03	Des: 0.5%; Curb Min: 0.3%; Uncurbed: 0%

* Indicates Level One controlling design criteria. A deviation from such is a design exception, and is subject to approval. See section 40-8.0

I-69 Section 6 Contract 5 Design Criteria
Route: PR-Winslet Blvd"

INDOT (des.) #1801695

	DESIGN ELEMENT	INDIANA DESIGN MANUAL SECTION (2013 - English)	PROJECT-SPECIFIC CRITERIA DEFINITION
DESIGN CONTROLS	**Functional Classification**	40-1.01	Urban Local Street (Built-Up), 4R
	INDOT Geometric Design Table	Ch. 53	Figure 53-9
	Design Year Traffic, AADT (2045)	Fig. 40-4A	2,300
	Design Vehicle	Fig. 46-1E	WB-50
	***Design Speed, mph**	Fig. 53-9	25 mph
	Access Control	Fig. 53-9	None
	Level of Service	Fig. 53-9	
CROSS SECTION ELEMENTS	**Travel Lane**		
	***Width**	45-1.01	12 ft
	Surface Type	Ch. 304	Asphalt / Concrete
	***Curb Offset**	45-1.02	2 ft
	Shoulder		
	***Usable Width**	45-1.02	2 ft
	Surface Type	Ch. 304	Asphalt / Concrete
	Cross Slope		
	***Travel Lane**	45-1.01	2%
	Shoulder	45-1.02	2%
	Auxiliary Lanes		
	Lane Width	45-1.03	N/A
	Curb Offset	45-1.03	N/A
	Shoulder Width	45-1.03	N/A
	Surface Type	Ch. 304	Asphalt / Concrete
	Parking-Lane Width	45-1.04	N/A
	Sidewalk Width	45-1.06	N/A
	Bicycle-Lane Width	51-7.0	N/A
	Clear Zone Width	49-2.0	10 ft
	Typical Curbing Type, where used	45-1.05	Vertical/Sloping
	Side Slopes (Uncurbed)		
	Cut Foreslope	45-3.0	3:1 Max
	Cut Ditch Width	45-3.0	0 ft
	Cut Backslope	45-3.0	3:1 Max
	Fill	45-3.0	3:1 Max
	Side Slopes (Curbed)		
	Cut Backslope	45-3.0	Sidewalk: 11 ft Shelf; No Sidewalk: 5 ft Shelf
	Fill	45-3.0	12:1 for 12 ft; 3:1 Max to Toe
BRIDGES	**New or Reconstructed Bridges**		
	***Structural Capacity**	Ch. 403	N/A
	***Clear-Roadway Width**	45-4.01	N/A
	Existing Bridges to Remain in Place		
	***Structural Capacity**	Ch. 72	N/A
	***Clear-Roadway Width**	45-4.01	N/A
	***Vertical Clearance (Freeway Under)**		
	New or Replaced Overpassing Bridge	44-4.0	N/A
	Existing Overpassing Bridge	44-4.0	N/A
	Vertical Clearance, Local over Railroad	402-6.01	N/A
ALIGNMENT ELEMENTS	***Stopping Sight Distance**	42-1.0	155 ft
	Decision Sight Distance		
	Avoidance maneuver	42-2.0	U: 515 ft; SU: 445 ft
	Stop Maneuver	42-2.0	430 ft
	Intersection Sight Distance	46-10.0	P: 280 ft; SUT: 350 ft
	***Minimum Radius, e=8%**	43-2.0	140 ft
	***Superelevation Rate**	43-3.0	emax= 4%
	***Horizontal Sight Distance**	43-4.0	155 ft
	***Vertical Curvature, K-value**		
	Crest	44-3.0	12
	Sag	44-3.0	26
	Vertical Grades		
	***Maximum**	44-1.02	Level: 10%
	Minimum	44-1.03	Des: 0.5%; Min: 0.3% (Curbed) 0.0% (Uncurbed)

* Indicates Level One controlling design criteria. A deviation from such is a design exception, and is subject to approval. See section 40-8.0

I-69 Section 6 Contract 5 Design Criteria
Route: Line "Perry Commons"

INDOT (des.) #1801695

	DESIGN ELEMENT	INDIANA DESIGN MANUAL SECTION (2013 - English)	PROJECT-SPECIFIC CRITERIA DEFINITION
DESIGN CONTROLS	**Functional Classification**	40-1.01	Urban Local Street (Built-up), 4R
	INDOT Geometric Design Table	Ch. 53	Figure 53-9
	Design Year Traffic, AADT (2045)	Fig. 40-4A	<500
	Design Vehicle	Fig. 46-1E	WB-40
	***Design Speed, mph**	Fig. 53-9	25 mph
	Access Control	Fig. 53-9	None
	Level of Service	Fig. 53-9	D
CROSS SECTION ELEMENTS	**Travel Lane**		
	***Width**	45-1.01	11 ft
	Surface Type	Ch. 304	Asphalt / Concrete
	***Curb Offset**	45-1.02	2 ft
	Shoulder		
	***Usable Width**	45-1.02	2 ft
	Surface Type	Ch. 304	Asphalt / Concrete
	Cross Slope		
	***Travel Lane**	45-1.01	2%
	Shoulder	45-1.02	2%
	Auxiliary Lanes		
	Lane Width	45-1.03	N/A
	Curb Offset	45-1.03	N/A
	Shoulder Width	45-1.03	N/A
	Surface Type	Ch. 304	Asphalt / Concrete
	Parking-Lane Width	45-1.04	N/A
	Sidewalk Width	45-1.06	N/A
	Bicycle-Lane Width	51-7.0	N/A
	Clear Zone Width	49-2.0	10 ft
	Typical Curbing Type, where used	45-1.05	
	Side Slopes (Uncurbed)		
	Cut Foreslope	45-3.0	N/A
	Cut Ditch Width	45-3.0	N/A
	Cut Backslope	45-3.0	N/A
	Fill	45-3.0	N/A
	Side Slopes (Curbed)		
	Cut Backslope	45-3.0	Sidewalk: 11 ft Shelf; No Sidewalk: 5 ft Shelf
	Fill	45-3.0	12:1 for 12 ft; 3:1 Max to Toe
BRIDGES	**New or Reconstructed Bridges**		
	***Structural Capacity**	Ch. 403	N/A
	***Clear-Roadway Width**	45-4.01	N/A
	Existing Bridges to Remain in Place		
	***Structural Capacity**	Ch. 72	N/A
	***Clear-Roadway Width**	45-4.01	N/A
	***Vertical Clearance (Freeway Under)**		
	New or Replaced Overpassing Bridge	44-4.0	N/A
	Existing Overpassing Bridge	44-4.0	N/A
	Vertical Clearance, Local over Railroad	402-6.01	N/A
ALIGNMENT ELEMENTS	***Stopping Sight Distance**	42-1.0	155 ft
	Decision Sight Distance		
	Avoidance maneuver	42-2.0	U: 515 ft; SU: 445 ft
	Stop Maneuver	42-2.0	430 ft
	Intersection Sight Distance	46-10.0	P: 280 ft; SUT: 350 ft
	***Minimum Radius, e=8%**	43-2.0	140 ft
	***Superelevation Rate**	43-3.0	emax= 4%
	***Horizontal Sight Distance**	43-4.0	
	***Vertical Curvature, K-value**		
	Crest	44-3.0	19
	Sag	44-3.0	26
	Vertical Grades		
	***Maximum**	44-1.02	Level: 10%
	Minimum	44-1.03	Des: 0.5%; Min: 0.3% (Curbed) 0.0% (Uncurbed)

* Indicates Level One controlling design criteria. A deviation from such is a design exception, and is subject to approval. See section 40-8.0

I-69 Section 6 Contract 5 Design Criteria
Route: Line "PR-Wellingshire-C"

INDOT (des.) #1801695

	DESIGN ELEMENT	INDIANA DESIGN MANUAL SECTION (2013 - English)	PROJECT-SPECIFIC CRITERIA DEFINITION
DESIGN CONTROLS	**Functional Classification**	40-1.01	Urban Local Street (Suburban), 4R
	INDOT Geometric Design Table	Ch. 53	Figure 53-9
	Design Year Traffic, AADT (2045)	Fig. 40-4A	3,600
	Design Vehicle	Fig. 46-1E	WB-40
	***Design Speed, mph**	Fig. 53-9	30 mph
	Access Control	Fig. 53-9	None
	Level of Service	Fig. 53-9	
CROSS SECTION ELEMENTS	**Travel Lane**		
	***Width**	45-1.01	12 ft
	Surface Type	Ch. 304	Asphalt / Concrete
	***Curb Offset**	45-1.02	2 ft
	Shoulder		
	***Usable Width**	45-1.02	2 ft
	Surface Type	Ch. 304	Asphalt / Concrete
	Cross Slope		
	***Travel Lane**	45-1.01	2%
	Shoulder	45-1.02	2%
	Auxiliary Lanes		
	Lane Width	45-1.03	10 ft
	Curb Offset	45-1.03	2 ft
	Shoulder Width	45-1.03	2 ft
	Surface Type	Ch. 304	Asphalt / Concrete
	Parking-Lane Width	45-1.04	N/A
	Sidewalk Width	45-1.06	N/A
	Bicycle-Lane Width	51-7.0	N/A
	Clear Zone Width	49-2.0	10 ft
	Typical Curbing Type, where used	45-1.05	
	Side Slopes (Uncurbed)		
	Cut Foreslope	45-3.0	3:1 Max
	Cut Ditch Width	45-3.0	0 ft
	Cut Backslope	45-3.0	3:1 Max
	Fill	45-3.0	3:1 Max
	Side Slopes (Curbed)		
	Cut Backslope	45-3.0	Sidewalk: 11 ft Shelf; No Sidewalk: 5 ft Shelf
	Fill	45-3.0	12:1 for 12 ft; 3:1 Max to Toe
BRIDGES	**New or Reconstructed Bridges**		
	***Structural Capacity**	Ch. 403	N/A
	***Clear-Roadway Width**	45-4.01	N/A
	Existing Bridges to Remain in Place		
	***Structural Capacity**	Ch. 72	N/A
	***Clear-Roadway Width**	45-4.01	N/A
	***Vertical Clearance (Freeway Under)**		
	New or Replaced Overpassing Bridge	44-4.0	N/A
	Existing Overpassing Bridge	44-4.0	N/A
	Vertical Clearance, Local over Railroad	402-6.01	N/A
ALIGNMENT ELEMENTS	***Stopping Sight Distance**	42-1.0	200 ft
	Decision Sight Distance		
	Avoidance maneuver	42-2.0	U: 620 ft; SU: 535 ft
	Stop Maneuver	42-2.0	490 ft
	Intersection Sight Distance	46-10.0	P: 330 ft; SUT: 420 ft
	***Minimum Radius, e=8%**	43-2.0	260 ft
	***Superelevation Rate**	43-3.0	emax= 4%
	***Horizontal Sight Distance**	43-4.0	
	***Vertical Curvature, K-value**		
	Crest	44-3.0	29
	Sag	44-3.0	37
	Vertical Grades		
	***Maximum**	44-1.02	Level: 10%
	Minimum	44-1.03	Des: 0.5%; Min: 0.3% (Curbed) 0.0% (Uncurbed)

* Indicates Level One controlling design criteria. A deviation from such is a design exception, and is subject to approval. See section 40-8.0

I-69 Section 6 Contract 5 Design Criteria
Route: Belmont Avenue - Line "Southport Connector-C"

INDOT (des.) #1801695

	DESIGN ELEMENT	INDIANA DESIGN MANUAL SECTION (2013 - English)	PROJECT-SPECIFIC CRITERIA DEFINITION
DESIGN CONTROLS	**Functional Classification**	40-1.01	Urban Local Street (Intermediate), 4R
	INDOT Geometric Design Table	Ch. 53	Figure 53-9
	Design Year Traffic, AADT (2045)	Fig. 40-4A	3,800
	Design Vehicle	Fig. 46-1E	
	***Design Speed, mph**	Fig. 53-9	30 mph
	Access Control	Fig. 53-9	None
	Level of Service	Fig. 53-9	
CROSS SECTION ELEMENTS	**Travel Lane**		
	***Width**	45-1.01	12 ft
	Surface Type	Ch. 304	Asphalt / Concrete
	***Curb Offset**	45-1.02	2 ft
	Shoulder		
	***Usable Width**	45-1.02	2 ft
	Surface Type	Ch. 304	Asphalt / Concrete
	Cross Slope		
	***Travel Lane**	45-1.01	2%
	Shoulder	45-1.02	2%
	Auxiliary Lanes		
	Lane Width	45-1.03	10 ft
	Curb Offset	45-1.03	2 ft
	Shoulder Width	45-1.03	2 ft
	Surface Type	Ch. 304	Asphalt / Concrete
	Parking-Lane Width	45-1.04	N/A
	Sidewalk Width	45-1.06	N/A
	Bicycle-Lane Width	51-7.0	N/A
	Clear Zone Width	49-2.0	10 ft
	Typical Curbing Type, where used	45-1.05	
	Side Slopes (Uncurbed)		
	Cut Foreslope	45-3.0	3:1 Max
	Cut Ditch Width	45-3.0	0 ft
	Cut Backslope	45-3.0	3:1 Max
	Fill	45-3.0	3:1 Max
	Side Slopes (Curbed)		
	Cut Backslope	45-3.0	Sidewalk: 11 ft Shelf; No Sidewalk: 5 ft Shelf
	Fill	45-3.0	12:1 for 12 ft; 3:1 Max to Toe
BRIDGES	**New or Reconstructed Bridges**		
	***Structural Capacity**	Ch. 403	HL-93
	***Clear-Roadway Width**	45-4.01	3.667 ft Lt + Travel Way + 3.667 ft Rt
	Existing Bridges to Remain in Place		
	***Structural Capacity**	Ch. 72	N/A
	***Clear-Roadway Width**	45-4.01	N/A
	***Vertical Clearance (Freeway Under)**		
	New or Replaced Overpassing Bridge	44-4.0	N/A
	Existing Overpassing Bridge	44-4.0	N/A
	Vertical Clearance, Local over Railroad	402-6.01	N/A
ALIGNMENT ELEMENTS	***Stopping Sight Distance**	42-1.0	200 ft
	Decision Sight Distance		
	Avoidance maneuver	42-2.0	U: 620 ft; SU: 535 ft
	Stop Maneuver	42-2.0	490 ft
	Intersection Sight Distance	46-10.0	P: 330 ft; SUT: 420 ft
	***Minimum Radius, e=8%**	43-2.0	260 ft
	***Superelevation Rate**	43-3.0	emax= 4%
	***Horizontal Sight Distance**	43-4.0	
	***Vertical Curvature, K-value**		
	Crest	44-3.0	29
	Sag	44-3.0	37
	Vertical Grades		
	***Maximum**	44-1.02	Level: 10%
	Minimum	44-1.03	Des: 0.5%; Min: 0.3% (Curbed) 0.0% (Uncurbed)

* Indicates Level One controlling design criteria. A deviation from such is a design exception, and is subject to approval. See section 40-8.0

I-69 Section 6 Contract 5 Design Criteria
Route: Banta Road - Line "PR-Banta Rd"

INDOT (des.) #1801695

	DESIGN ELEMENT	INDIANA DESIGN MANUAL SECTION (2013 - English)	PROJECT-SPECIFIC CRITERIA DEFINITION
DESIGN CONTROLS	Functional Classification	40-1.01	Urban Collector (Intermediate), 3R
	INDOT Geometric Design Table	Ch. 53	Figure 55-3G
	Design Year Traffic, AADT (2045)	Fig. 40-4A	6,300
	Design Vehicle	Fig. 46-1E	WB-50
	*Design Speed, mph	55-4.01	40 mph
	Access Control	40-5.0	None
	Level of Service	40-2.0	D
CROSS SECTION ELEMENTS	Travel Lane		
	*Width	55-4.05	12 ft 14 ft under I-69
	Surface Type	Ch. 52	Asphalt / Concrete
	*Curb Offset	55-4.05	2 ft
	Shoulder		
	*Usable Width	55-4.05	2 ft
	Surface Type	Ch. 304	Asphalt / Concrete
	Cross Slope		
	*Travel Lane	55-4.05	2%
	Shoulder	55-4.05	2%
	Auxiliary Lanes		
	Lane Width	55-4.05	10 ft
	Curb Offset	55-4.05	2 ft
	Shoulder Width	55-4.05	2 ft
	Surface Type	Ch. 304	Asphalt / Concrete
	TWLTL Width	46-5.0	N/A
	Parking-Lane Width	45-1.04	N/A
	Sidewalk Width	55-4.05	N/A
	Bicycle-Lane Width	51-7.0	N/A
	Clear Zone Width	49-2.0	10 ft
	Obstruction-Free-Zone Width	55-5.02	1.5 ft
	Typical Curbing Type, where used	55-4.05	
	Side Slopes (Uncurbed)		
	Cut Foreslope	55-4.05	
	Cut Ditch Width	55-4.05	
	Cut Backslope	55-4.05	
	Fill	55-4.05	
	Side Slopes (Curbed)		
	Cut Backslope	55-4.05	No Widening: 2:1 Max; Widening: 3:1 Max
	Fill	55-4.05	Des: 3:1
BRIDGES	New or Reconstructed Bridges		
	*Structural Capacity	Ch. 403	N/A
	*Clear-Roadway Width	45-4.01	N/A
	Existing Bridges to Remain in Place		
	*Structural Capacity	Ch. 72	N/A
	*Clear-Roadway Width	45-4.01	N/A
	*Vertical Clearance (Freeway Under)		
	New or Replaced Overpassing Bridge	44-4.0	14.5 ft
	Existing Overpassing Bridge	44-4.0	N/A
	Vertical Clearance, Local over Railroad	402-6.01	N/A
ALIGNMENT ELEMENTS	*Stopping Sight Distance	55-4.02	305 ft
	Decision Sight Distance		
	Avoidance maneuver	42-2.0	U: 825 ft; SU: 715 ft
	Stop Maneuver	42-2.0	690 ft
	Intersection Sight Distance	55-4.06	P: 440; SUT: 560
	*Minimum Radius, e=8%	55-4.03	
	*Superelevation Rate	55-4.03	6%
	*Horizontal Sight Distance	55-4.03	
	*Vertical Curvature, K-value		
	Crest	55-4.04	61
	Sag	55-4.04	64
	Vertical Grades		
	*Maximum	55-4.04	Level: 10%
	Minimum	44-1.03	Des: 0.5%; Min: 0.3% (Curbed) 0.0% (Uncurbed)

* Indicates Level One controlling design criteria. A deviation from such is a design exception, and is subject to approval. See section 40-8.0

I-69 Section 6 Contract 5 Design Criteria
Route: Line "PR-Edgewood Ave"

INDOT (des.) #1801695

	DESIGN ELEMENT	INDIANA DESIGN MANUAL SECTION (2013 - English)	PROJECT-SPECIFIC CRITERIA DEFINITION
DESIGN CONTROLS	**Functional Classification**	40-1.01	Urban Arterial (Built-up), 3R
	INDOT Geometric Design Table	Ch. 53	Figure 55-3F
	Design Year Traffic, AADT (2045)	Fig. 40-4A	3,100
	Design Vehicle	Fig. 46-1E	WB-50
	***Design Speed, mph**	55-4.01	40 mph Advisory speed at Belmont Intersection
	Access Control	40-5.01	None
	Level of Service	40-2.0	D
CROSS SECTION ELEMENTS	**Travel Lane**		
	***Width**	55-4.05	12 ft 14 ft under I-69
	Surface Type	Ch. 304	Asphalt / Concrete
	***Curb Offset**	55-4.05	2 ft
	Shoulder		
	***Usable Width**	55-4.05	2 ft
	Surface Type	Ch. 304	Asphalt / Concrete
	Cross Slope		
	***Travel Lane**	55-4.05	2%
	Shoulder	55-4.05	2%
	Auxiliary Lanes		
	Lane Width	55-4.05	10 ft
	Curb Offset	55-4.05	2 ft
	Shoulder Width	55-4.05	2 ft
	Surface Type	Ch. 304	Asphalt / Concrete
	TWLTL Width	46-5.0	N/A
	Parking-Lane Width	45-1.04	N/A
	Sidewalk Width	45-1.06	N/A
	Bicycle-Lane Width	51-7.0	N/A
	Clear Zone Width	49-2.0	10 ft
	Typical Curbing Type, where used	55-5.0	Vertical/Sloping
	Side Slopes (Uncurbed)		
	Cut Foreslope	55-5.0	3:1 Max
	Cut Ditch Width	55-5.0	0 ft
	Cut Backslope	55-5.0	3:1 Max
	Fill	55-5.0	3:1 Max
	Side Slopes (Curbed)		
	Cut Backslope	55-4.05	No Widening: 2:1 Max; Widening: 3:1 Max
	Fill	55-4.05	3:1 Des
BRIDGES	**New or Reconstructed Bridges**		
	***Structural Capacity**	Ch. 403	N/A
	***Clear-Roadway Width**	45-4.01	N/A
	Existing Bridges to Remain in Place		
	***Structural Capacity**	Ch. 72	N/A
	***Clear-Roadway Width**	45-4.01	N/A
	***Vertical Clearance (Freeway Under)**		
	New or Replaced Overpassing Bridge	44-4.0	16.5 ft
	Existing Overpassing Bridge	44-4.0	N/A
	Vertical Clearance, Local over Railroad	402-6.01	N/A
ALIGNMENT ELEMENTS	***Stopping Sight Distance**	55-4.02	305 ft
	Decision Sight Distance		
	Avoidance maneuver	42-2.0	U: 825 ft; SU: 715 ft
	Stop Maneuver	42-2.0	690 ft
	Intersection Sight Distance	55-4.06	P: 440 ft; SUT: 560 ft
	***Minimum Radius, e=8%**	55-4.03	485 ft
	***Superelevation Rate**	55-4.03	emax= 6%
	***Horizontal Sight Distance**	55-4.03	305 ft
	***Vertical Curvature, K-value**		
	Crest	55-4.04	61
	Sag	55-4.04	64
	Vertical Grades		
	***Maximum**	55-4.04	8.5%
	Minimum	44-1.03	Des: 0.5%; Min: 0.3% (Curbed) 0.0% (Uncurbed)

* Indicates Level One controlling design criteria. A deviation from such is a design exception, and is subject to approval. See section 40-8.0

I-69 Section 6 Contract 5 Design Criteria
Route: Line "PR-A2"
Segment E

INDOT (des.) # 1901381

	DESIGN ELEMENT	INDIANA DESIGN MANUAL SECTION (2013 - English)	PROJECT-SPECIFIC CRITERIA DEFINITION
DESIGN CONTROLS	Functional Classification	40-1.01	Freeway, 4R (Urban)
	INDOT Geometric Design Table	Ch. 53	Figure 53-1
	Design Year Traffic, AADT (2045)	Fig. 40-2A	South of County Line: 65,000 North of County Line: 78,200
	Design Vehicle	Fig. 46-1E	IDV
	* Design Speed, mph	Fig. 53-1	70 mph
	Access Control	Fig. 53-1	Full Control
	Level of Service	Fig. 53-1	Desirable: B; Minimum: C
CROSS SECTION ELEMENTS	Travel Lane		
	*Width	45-1.01	12 ft
	Surface Type	Ch. 304	Asphalt / Concrete
	Shoulder		
	*Right Width Usable	45-1.02	13 ft
	*Right Width Paved	45-1.02	12 ft; 14 ft with barrier
	*Left Width Paved	45-1.02	12 ft; 14 ft with barrier
	Surface Type	Ch. 304	Asphalt / Concrete
	Cross Slope		
	*Travel Lane	45-1.01	2%
	Shoulder	45-1.02	4%
	Auxiliary Lanes		
	*Lane Width	45-1.03	12 ft
	*Shoulder Width	45-1.03	Right: 10 ft; Left: 4 ft
	Median Width		
	Depressed	45-2.0	50 ft
	Flush, with CMB	45-2.0	30.5 ft
	Clear Zone Width	49-2.0	30 ft min.
	Side Slopes		
	Cut Foreslope	45-3.0	6:1
	Cut Ditch Width	45-3.0	4 ft
	Cut Backslope	45-3.0	4:1 for 20 ft, then 3:1 max
	Fill	45-3.0	6:1 to Clear Zone; 3:1 max. to Toe
	Median Slopes	45-2.02	Desirable: 8:1; Maximum: 5:1
BRIDGES	New or Reconstructed Bridges		
	*Structural Capacity	Ch. 403	HL-93
	*Clear-Roadway Width	45-4.01	Full Paved Approach Width
	*Bridge Railing Safety Performance	IDM Figure 49-6D	TL-5
	Existing Bridges to Remain in Place		
	*Structural Capacity	Ch. 72	N/A
	*Clear-Roadway Width	45-4.01	N/A
	*Vertical Clearance (Freeway Under)		
	New or Replaced Overpassing Bridge	44-4.0	N/A
	Existing Overpassing Bridge	44-4.0	N/A
	Sign Truss/Pedestrian Bridge	44-4.0	N/A
	Vertical Clearance, Freeway over Railroad	402-6.01	N/A
ALIGNMENT ELEMENTS	*Stopping Sight Distance	42-1.0	730 ft
	Decision Sight Distance		
	Avoidance maneuver E	42-2.0	1445 ft
	*Minimum Radius, e=8%	43-2.0	1810 ft
	*Superelevation Rate	43-3.0	e_{max} = 8%
	*Horizontal Sight Distance	43-4.0	730 ft
	*Vertical Curvature, K-value		
	Crest	44-3.0	Desirable: 312
	Sag	44-3.0	181
	Vertical Grades		
	*Maximum	44-1.02	Level: 3%
	Minimum	44-1.03	Desirable: 0.5%, Minimum: 0.3%

* Indicates Level One controlling design criteria. A deviation from such is a design exception, and is subject to approval. See section 40-8.0

I-69 Section 6 Contract 5 Design Criteria
Route: Line "County Line - NBEX"
Segment E

INDOT (des.) # 1901381

	DESIGN ELEMENT	INDIANA DESIGN MANUAL SECTION (2013 - English)	PROJECT-SPECIFIC CRITERIA DEFINITION
DESIGN CONTROLS	Functional Classification		Freeway Ramp
	INDOT Geometric Design Table	Ch. 48	Figure 48-5A
	Design Year Traffic, AADT (2045)	40-2.01	3,700
	Design Vehicle	Fig. 46-1E	IDV
	* Design Speed, mph	Fig. 48-5A	25 mph
	Access Control	Fig. 53-1	Full Control
	Level of Service	Fig. 53-1	Desirable: B; Minimum: C
CROSS SECTION ELEMENTS	Travel Lane		
	*Width	48-5.02	Single Lane: 16 ft
	Surface Type	Ch. 304	Asphalt / Concrete
	Shoulder		
	*Right Width Usable	48-5.02	Single Lane: 9 ft; 11 ft with barrier
	*Right Width Paved	48-5.02	Single Lane: 8 ft; 10 ft with barrier
	*Left Width Usable	48-5.02	5 ft
	*Left Width Paved	48-5.02	4 ft; 6 ft with barrier
	Cross Slope		
	*Travel Lane	48-5.02	2%
	Shoulder	48-5.02	Right: 4%; Left: 2%
	Clear Zone Width	49-2.0	14 ft min.
	Side Slopes		
	Cut Foreslope	45-3.0	6:1
	Cut Ditch Width	45-3.0	4 ft
	Cut Backslope	45-3.0	4:1
	Fill	45-3.0	6:1 to Clear Zone; 3:1 max. to Toe
BRIDGES	New or Reconstructed Bridges		
	*Structural Capacity	Ch. 403	N/A
	*Clear-Roadway Width	45-4.01	N/A
	*Bridge Railing Safety Performance	IDM Figure 49-6D	N/A
	Existing Bridges to Remain in Place		
	*Structural Capacity	Ch. 72	N/A
	*Clear-Roadway Width	45-4.01	N/A
	*Vertical Clearance (Freeway Under)		
	New or Replaced Overpassing Bridge	44-4.0	N/A
	Existing Overpassing Bridge	44-4.0	N/A
	Sign Truss/Pedestrian Bridge	44-4.0	N/A
	Vertical Clearance, Freeway over Railroad	402-6.01	N/A
ALIGNMENT ELEMENTS	*Stopping Sight Distance	42-1.0	155 ft
	Decision Sight Distance		
	Avoidance maneuver E	42-2.0	515 ft
	*Minimum Radius, e=8%	48-2.02(02)	180 ft
	*Superelevation Rate	43-3.0	e_{max} = 8%
	*Horizontal Sight Distance	43-4.0	155 ft
	*Vertical Curvature, K-value		
	Crest	44-3.0	Desirable: 19
	Sag	44-3.0	26
	Vertical Grades		
	*Maximum	48-5.04(01)	5%
	Minimum	44-1.03	Desirable: 0.5%, Minimum: 0.30%

* Indicates Level One controlling design criteria. A deviation from such is a design exception, and is subject to approval. See section 40-8.0

I-69 Section 6 Contract 5 Design Criteria

Route: Line "County Line - NBEN"

Segment E

INDOT (des.) # 1901381

	DESIGN ELEMENT	INDIANA DESIGN MANUAL SECTION (2013 - English)	PROJECT-SPECIFIC CRITERIA DEFINITION
DESIGN CONTROLS	**Functional Classification**		Freeway Ramp
	INDOT Geometric Design Table	Ch. 48	Figure 48-5A
	Design Year Traffic, AADT (2045)	40-2.01	11,000
	Design Vehicle	Fig. 46-1E	IDV
	*** Design Speed, mph**	Fig. 48-5A	30 - 60 mph
	Access Control	Fig. 53-1	Full Control
	Level of Service	Fig. 53-1	Desirable: B; Minimum: C
CROSS SECTION ELEMENTS	**Travel Lane**		
	***Width**	48-5.02	Single Lane: 16 ft; Multi-Lane: 12 ft per lane
	Surface Type	Ch. 304	Asphalt / Concrete
	Shoulder		
	***Right Width Usable**	48-5.02	Single Lane: 9 ft; 11 ft with barrier; Multi-Lane: 11 ft; 13 ft with barrier
	***Right Width Paved**	48-5.02	Single Lane: 8 ft; 10 ft with barrier; Multi-Lane: 10 ft; 12 ft with barrier
	***Left Width Usable**	48-5.02	5 ft
	***Left Width Paved**	48-5.02	4 ft; 6 ft with barrier
	Cross Slope		
	***Travel Lane**	48-5.02	2%
	Shoulder	48-5.02	Right: 4%; Left: 2%
	Clear Zone Width	49-2.0	20 ft min.
	Side Slopes		
	Cut Foreslope	45-3.0	6:1
	Cut Ditch Width	45-3.0	4 ft
	Cut Backslope	45-3.0	4:1
	Fill	45-3.0	6:1 to Clear Zone; 3:1 max. to Toe
BRIDGES	**New or Reconstructed Bridges**		
	***Structural Capacity**	Ch. 403	N/A
	***Clear-Roadway Width**	45-4.01	N/A
	***Bridge Railing Safety Performance**	IDM Figure 49-6D	N/A
	Existing Bridges to Remain in Place		
	***Structural Capacity**	Ch. 72	N/A
	***Clear-Roadway Width**	45-4.01	N/A
	***Vertical Clearance (Freeway Under)**		
	New or Replaced Overpassing Bridge	44-4.0	N/A
	Existing Overpassing Bridge	44-4.0	N/A
	Sign Truss/Pedestrian Bridge	44-4.0	N/A
	Vertical Clearance, Freeway over Railroad	402-6.01	N/A
ALIGNMENT ELEMENTS	***Stopping Sight Distance**	42-1.0	200 ft (30 mph); 425 ft (50 mph)
	Decision Sight Distance		
	Avoidance maneuver E	42-2.0	620 ft (30 mph); 1030 ft (50 mph)
	***Minimum Radius, e=8%**	48-2.02(02)	214 ft (30 mph); 758 ft (50 mph)
	***Superelevation Rate**	43-3.0	e_{max} = 8%
	***Horizontal Sight Distance**	43-4.0	200 ft (30 mph); 425 ft (50 mph)
	***Vertical Curvature, K-value**		
	Crest	44-3.0	Desirable: 29 (30 mph); 114 (50 mph)
	Sag	44-3.0	37 (30 mph); 96 (50 mph)
	Vertical Grades		
	***Maximum**	48-5.04(01)	5%
	Minimum	44-1.03	Desirable: 0.5%, Minimum: 0.30%

* Indicates Level One controlling design criteria. A deviation from such is a design exception, and is subject to approval. See section 40-8.0

I-69 Section 6 Contract 5 Design Criteria
Route: Line "County Line - SBEX"
Segment E

INDOT (des.) # 1901381

	DESIGN ELEMENT	INDIANA DESIGN MANUAL SECTION (2013 - English)	PROJECT-SPECIFIC CRITERIA DEFINITION
DESIGN CONTROLS	**Functional Classification**		Freeway Ramp
	INDOT Geometric Design Table	Ch. 48	Figure 48-5A
	Design Year Traffic, AADT (2045)	40-2.01	9,600
	Design Vehicle	Fig. 46-1E	IDV
	*** Design Speed, mph**	Fig. 48-5A	30 - 60 mph
	Access Control	Fig. 53-1	Full Control
	Level of Service	Fig. 53-1	Desirable: B; Minimum: C
CROSS SECTION ELEMENTS	**Travel Lane**		
	***Width**	48-5.02	Single Lane: 16 ft; Multi-Lane: 12 ft per lane
	Surface Type	Ch. 304	Asphalt / Concrete
	Shoulder		
	***Right Width Usable**	48-5.02	Single Lane: 9 ft; 11 ft with barrier; Multi-Lane: 11 ft; 13 ft with barrier
	***Right Width Paved**	48-5.02	Single Lane: 8 ft; 10 ft with barrier; Multi-Lane: 10 ft; 12 ft with barrier
	***Left Width Usable**	48-5.02	5 ft
	***Left Width Paved**	48-5.02	4 ft; 6 ft with barrier
	Cross Slope		
	***Travel Lane**	48-5.02	2%
	Shoulder	48-5.02	Right: 4%; Left: 2%
	Clear Zone Width	49-2.0	20 ft min.
	Side Slopes		
	Cut Foreslope	45-3.0	6:1
	Cut Ditch Width	45-3.0	4 ft
	Cut Backslope	45-3.0	4:1
	Fill	45-3.0	6:1 to Clear Zone; 3:1 max. to Toe
BRIDGES	**New or Reconstructed Bridges**		
	***Structural Capacity**	Ch. 403	N/A
	***Clear-Roadway Width**	45-4.01	N/A
	***Bridge Railing Safety Performance**	IDM Figure 49-6D	N/A
	Existing Bridges to Remain in Place		
	***Structural Capacity**	Ch. 72	N/A
	***Clear-Roadway Width**	45-4.01	N/A
	***Vertical Clearance (Freeway Under)**		
	New or Replaced Overpassing Bridge	44-4.0	N/A
	Existing Overpassing Bridge	44-4.0	N/A
	Sign Truss/Pedestrian Bridge	44-4.0	N/A
	Vertical Clearance, Freeway over Railroad	402-6.01	N/A
ALIGNMENT ELEMENTS	***Stopping Sight Distance**	42-1.0	200 ft (30 mph); 425 ft (50 mph)
	Decision Sight Distance		
	Avoidance maneuver E	42-2.0	620 ft (30 mph); 1030 ft (50 mph)
	***Minimum Radius, e=8%**	48-2.02(02)	214 ft (30 mph); 758 ft (50 mph)
	***Superelevation Rate**	43-3.0	e_{max} = 8%
	***Horizontal Sight Distance**	43-4.0	200 ft (30 mph); 425 ft (50 mph)
	***Vertical Curvature, K-value**		
	Crest	44-3.0	Desirable: 29 (30 mph); 114 (50 mph)
	Sag	44-3.0	37 (30 mph); 96 (50 mph)
	Vertical Grades		
	***Maximum**	48-5.04(01)	5%
	Minimum	44-1.03	Desirable: 0.5%, Minimum: 0.30%

* Indicates Level One controlling design criteria. A deviation from such is a design exception, and is subject to approval. See section 40-8.0

I-69 Section 6 Contract 5 Design Criteria

Route: Line "County Line - SBEN"

Segment E

INDOT (des.) # 1901381

	DESIGN ELEMENT	INDIANA DESIGN MANUAL SECTION (2013 - English)	PROJECT-SPECIFIC CRITERIA DEFINITION
DESIGN CONTROLS	Functional Classification		Freeway Ramp
	INDOT Geometric Design Table	Ch. 48	Figure 48-5A
	Design Year Traffic, AADT (2045)	40-2.01	4,000
	Design Vehicle	Fig. 46-1E	IDV
	* Design Speed, mph	Fig. 48-5A	30 - 60 mph
	Access Control	Fig. 53-1	Full Control
	Level of Service	Fig. 53-1	Desirable: B; Minimum: C
CROSS SECTION ELEMENTS	Travel Lane		
	*Width	48-5.02	Single Lane: 16 ft
	Surface Type	Ch. 304	Asphalt / Concrete
	Shoulder		
	*Right Width Usable	48-5.02	Single Lane: 9 ft; 11 ft with barrier
	*Right Width Paved	48-5.02	Single Lane: 8 ft; 10 ft with barrier
	*Left Width Usable	48-5.02	5 ft
	*Left Width Paved	48-5.02	4 ft; 6 ft with barrier
	Cross Slope		
	*Travel Lane	48-5.02	2%
	Shoulder	48-5.02	Right: 4%; Left: 2%
	Clear Zone Width	49-2.0	18 ft min.
	Side Slopes		
	Cut Foreslope	45-3.0	6:1
	Cut Ditch Width	45-3.0	4 ft
	Cut Backslope	45-3.0	4:1
	Fill	45-3.0	6:1 to Clear Zone; 3:1 max. to Toe
BRIDGES	New or Reconstructed Bridges		
	*Structural Capacity	Ch. 403	N/A
	*Clear-Roadway Width	45-4.01	N/A
	*Bridge Railing Safety Performance	IDM Figure 49-6D	N/A
	Existing Bridges to Remain in Place		
	*Structural Capacity	Ch. 72	N/A
	*Clear-Roadway Width	45-4.01	N/A
	*Vertical Clearance (Freeway Under)		
	New or Replaced Overpassing Bridge	44-4.0	N/A
	Existing Overpassing Bridge	44-4.0	N/A
	Sign Truss/Pedestrian Bridge	44-4.0	N/A
	Vertical Clearance, Freeway over Railroad	402-6.01	N/A
ALIGNMENT ELEMENTS	*Stopping Sight Distance	42-1.0	200 ft (30 mph); 425 ft (50 mph)
	Decision Sight Distance		
	Avoidance maneuver E	42-2.0	620 ft (30 mph); 1030 ft (50 mph)
	*Minimum Radius, e=8%	48-2.02(02)	214 ft (30 mph); 758 ft (50 mph)
	*Superelevation Rate	43-3.0	e_{max} = 8%
	*Horizontal Sight Distance	43-4.0	200 ft (30 mph); 425 ft (50 mph)
	*Vertical Curvature, K-value		
	Crest	44-3.0	Desirable: 29 (30 mph); 114 (50 mph)
	Sag	44-3.0	37 (30 mph); 96 (50 mph)
	Vertical Grades		
	*Maximum	48-5.04(01)	5%
	Minimum	44-1.03	Desirable: 0.5%, Minimum: 0.30%

* Indicates Level One controlling design criteria. A deviation from such is a design exception, and is subject to approval. See section 40-8.0

I-69 Section 6 Contract 5 Design Criteria

Route: Line "PR-County Line Road"

Segment E

INDOT (des.) # 1901381

	DESIGN ELEMENT	INDIANA DESIGN MANUAL SECTION (2013 - English)	PROJECT-SPECIFIC CRITERIA DEFINITION
DESIGN CONTROLS	**Functional Classification**	40-1.01	Urban Arterial (Intermediate)
	INDOT Geometric Design Table	Ch. 53	Figure 53-6
	Design Year Traffic, AADT (2045)	Fig. 40-2A	22,500
	Design Vehicle	Fig. 46-1E	Des: IDV, Min: WB-50
	*** Design Speed, mph**	Fig. 53-6	40 mph
	Access Control	Fig. 53-6	None
	Level of Service	Fig. 53-6	Desirable: C; Minimum: D
CROSS SECTION ELEMENTS	**Travel Lane**		
	***Width**	45-1.01	12 ft
	Surface Type	Ch. 304	Asphalt / Concrete
	Curbed Sections		
	***Curb Offset**	45-1.02	2 ft
	Cross Slope		
	***Travel Lane**	45-1.01	2%
	Median Width		
	Raised Island	45-2.0	8 ft
	Clear Zone Width	49-2.03(03)	10 ft
	Side Slopes		
	Cut Foreslope	45-3.0	6:1
	Cut Ditch Width	45-3.0	4 ft
	Cut Backslope	45-3.0	4:1 for 20 ft; 3:1 Max. to Top
	Fill	45-3.0	6:1 to Clear Zone; 3:1 max. to Toe
BRIDGES	**New or Reconstructed Bridges**		
	***Structural Capacity**	Ch. 403	N/A
	***Clear-Roadway Width**	45-4.01	N/A
	Bridge Railing Safety Performance	IDM Figure 49-6D	N/A
	Existing Bridges to Remain in Place		
	***Structural Capacity**	Ch. 72	N/A
	***Clear-Roadway Width**	45-4.01	N/A
	***Vertical Clearance (Arterial Under)**		
	New or Replaced Overpassing Bridge	44-4.0	16.5 ft
	Existing Overpassing Bridge	44-4.0	N/A
	Sign Truss/Pedestrian Bridge	44-4.0	N/A
	Vertical Clearance, Freeway over Railroad	402-6.01	N/A
ALIGNMENT ELEMENTS	***Stopping Sight Distance**	42-1.0	305 ft
	***Minimum Radius, e=6%**	43-2.0	485 ft
	***Superelevation Rate**	43-3.0	e_{max} = 6%
	***Horizontal Sight Distance**	43-4.0	305 ft
	***Vertical Curvature, K-value**		
	Crest	44-3.0	Desirable: 61
	Sag	44-3.0	64
	Vertical Grades		
	***Maximum**	44-1.02	Level: 6.5%
	Minimum	44-1.03	Desirable: 0.5%, Minimum: 0.3%

* Indicates Level One controlling design criteria. A deviation from such is a design exception, and is subject to approval. See section 40-8.0

I-69 Section 6 Contract 5 Design Criteria
Route: Line "PR-Wicker Road"
Segment E

INDOT (des.) # 1901381

	DESIGN ELEMENT	INDIANA DESIGN MANUAL SECTION (2013 - English)	PROJECT-SPECIFIC CRITERIA DEFINITION
DESIGN CONTROLS	Functional Classification	40-1.01	Urban Collector (Intermediate)
	INDOT Geometric Design Table	Ch. 53	Figure 55-3G
	Design Year Traffic, AADT (2045)	Fig. 40-2A	5,100
	Design Vehicle	Fig. 46-1E	Des: IDV, Min: WB-50
	* Design Speed, mph	Fig. 55-3G	40 mph
	Access Control	Fig. 55-3G	None
	Level of Service	Fig. 55-3G	Desirable: C; Minimum: D
CROSS SECTION ELEMENTS	Travel Lane		
	*Width	55-4.05	12 ft
	Surface Type	Ch. 304	Asphalt / Concrete
	Curbed Sections		
	*Curb Offset	55-4.05	2 ft
	Cross Slope		
	*Travel Lane	45-1.01	2%
	Auxiliary Lanes		
	Lane Width	55-4.05	12 ft
	Curb Offset	55-4.05	2 ft
	Surface Type	55-4.05	Asphalt / Concrete
	Median Width		
	Flush / Corrugated	55-4.05	Des: 16 ft; Min: 2 ft
	Sidewalk		
	Width	55-4.05	6 ft
	Bicycle Lanes		
	Width	51-7.0	5 ft
	Clear Zone Width	49-2.03(03)	10 ft
	Side Slopes		
	Cut Foreslope	45-3.0	2:1 or flatter
	Cut Ditch Width	45-3.0	Des: 4 ft; Min: 0 ft
	Cut Backslope	45-3.0	2:1 or flatter
	Fill	45-3.0	2:1 or flatter
BRIDGES	New or Reconstructed Bridges		
	*Structural Capacity	Ch. 403	N/A
	*Clear-Roadway Width	45-4.01	N/A
	Bridge Railing Safety Performance	IDM Figure 49-6D	N/A
	Existing Bridges to Remain in Place		
	*Structural Capacity	Ch. 72	N/A
	*Clear-Roadway Width	45-4.01	N/A
	*Vertical Clearance (Collector Under)		
	New or Replaced Overpassing Bridge	44-4.0	14.5 ft
	Existing Overpassing Bridge	44-4.0	N/A
	Vertical Clearance, Freeway over Railroad	402-6.01	N/A
ALIGNMENT ELEMENTS	*Stopping Sight Distance	42-1.0	305 ft
	*Minimum Radius, e=6%	43-2.0	485 ft
	*Superelevation Rate	43-3.0	e_{max} = 6%
	*Horizontal Sight Distance	43-4.0	305 ft
	*Vertical Curvature, K-value		
	Crest	44-3.0	Desirable: 61
	Sag	44-3.0	64
	Vertical Grades		
	*Maximum	44-1.02	Level: 10%
	Minimum	44-1.03	Desirable: 0.5%, Minimum: 0.3%

* Indicates Level One controlling design criteria. A deviation from such is a design exception, and is subject to approval. See section 40-8.0

I-69 Section 6 Contract 5 Design Criteria
Route: Line "PR-West Connector Road"
Segment E

INDOT (des.) # 1901381

	DESIGN ELEMENT	INDIANA DESIGN MANUAL SECTION (2013 - English)	PROJECT-SPECIFIC CRITERIA DEFINITION
DESIGN CONTROLS	Functional Classification	40-1.01	Urban Collector (Intermediate)
	INDOT Geometric Design Table	Ch. 53	Figure 53-8
	Design Year Traffic, AADT (2045)	Fig. 40-2A	5,300
	Design Vehicle	Fig. 46-1E	Des: IDV, Min: WB-50
	* Design Speed, mph	Fig. 53-8	40 mph
	Access Control	Fig. 53-8	None
	Level of Service	Fig. 53-8	Desirable: C; Minimum: D
CROSS SECTION ELEMENTS	Travel Lane		
	*Width	45-1.01	12 ft
	Surface Type	Ch. 304	Asphalt / Concrete
	Shoulder		
	*Width Usable	45-1.02	9 ft
	*Width Paved	45-1.02	8 ft; 10 ft with barrier
	Surface Type	Ch. 304	Asphalt / Concrete
	Cross Slope		
	*Travel Lane	45-1.01	2%
	Shoulder	45-1.02	4%
	Clear Zone Width	49-2.0	14 ft
	Side Slopes		
	Cut Foreslope	45-3.0	Des: 6:1; Max: 4:1
	Cut Ditch Width	45-3.0	4 ft
	Cut Backslope	45-3.0	4:1 for 4 ft; 3:1 Max. to Top
	Fill	45-3.0	4:1 max. to Clear Zone; 3:1 max. to Toe
BRIDGES	New or Reconstructed Bridges		
	*Structural Capacity	Ch. 403	HL-93
	*Clear-Roadway Width	45-4.01	Full Paved Approach Width
	Bridge Railing Safety Performance	IDM Figure 49-6D	TL-4
	Existing Bridges to Remain in Place		
	*Structural Capacity	Ch. 72	N/A
	*Clear-Roadway Width	45-4.01	N/A
	*Vertical Clearance (Collector Under)		
	New or Replaced Overpassing Bridge	44-4.0	N/A
	Existing Overpassing Bridge	44-4.0	N/A
	Vertical Clearance, Freeway over Railroad	402-6.01	N/A
ALIGNMENT ELEMENTS	*Stopping Sight Distance	42-1.0	305 ft
	*Minimum Radius, e=6%	43-2.0	485 ft
	*Superelevation Rate	43-3.0	e_{max} = 6%
	*Horizontal Sight Distance	43-4.0	305 ft
	*Vertical Curvature, K-value		
	Crest	44-3.0	Desirable: 61
	Sag	44-3.0	64
	Vertical Grades		
	*Maximum	44-1.02	Level: 8%
	Minimum	44-1.03	Desirable: 0.5%, Minimum: 0.3%

* Indicates Level One controlling design criteria. A deviation from such is a design exception, and is subject to approval. See section 40-8.0

I-69 Section 6 Contract 5 Design Criteria

Route: Line "PR-Glenns Valley Lane"

Segment E

INDOT (des.) # 1901381

	DESIGN ELEMENT	INDIANA DESIGN MANUAL SECTION (2013 - English)	PROJECT-SPECIFIC CRITERIA DEFINITION
DESIGN CONTROLS	**Functional Classification**	40-1.01	Urban Local Street (Suburban)
	INDOT Geometric Design Table	Ch. 53	Figure 53-9
	Design Year Traffic, AADT (2045)	Fig. 40-2A	< 500
	Design Vehicle	Fig. 46-1E	Des: WB-50, Min: WB-40
	*** Design Speed, mph**	Fig. 53-9	30 mph
	Access Control	Fig. 53-9	None
	Level of Service	Fig. 53-9	Desirable: C; Minimum: D
CROSS SECTION ELEMENTS	**Travel Lane**		
	***Width**	45-1.01	11 ft
	Surface Type	Ch. 304	Asphalt / Concrete
	Shoulder		
	***Width Usable**	45-1.02	4 ft
	Surface Type	Ch. 304	Aggregate
	Cross Slope		
	***Travel Lane**	45-1.01	2%
	Shoulder	45-1.02	4%
	Clear Zone Width	49-2.0	10 ft
	Side Slopes		
	Cut Foreslope	45-3.0	3:1 Max.
	Cut Ditch Width	45-3.0	Des: 4 ft; Min: 0 ft
	Cut Backslope	45-3.0	3:1 Max.
	Fill	45-3.0	3:1 Max.
BRIDGES	**New or Reconstructed Bridges**		
	***Structural Capacity**	Ch. 403	N/A
	***Clear-Roadway Width**	45-4.01	N/A
	Bridge Railing Safety Performance	IDM Figure 49-6D	N/A
	Existing Bridges to Remain in Place		
	***Structural Capacity**	Ch. 72	N/A
	***Clear-Roadway Width**	45-4.01	N/A
	***Vertical Clearance (Local Under)**		
	New or Replaced Overpassing Bridge	44-4.0	N/A
	Existing Overpassing Bridge	44-4.0	N/A
	Vertical Clearance, Freeway over Railroad	402-6.01	N/A
ALIGNMENT ELEMENTS	***Stopping Sight Distance**	42-1.0	200 ft
	***Minimum Radius, e=6%**	43-2.0	260 ft
	***Superelevation Rate**	43-3.0	e_{max} = 4%
	***Horizontal Sight Distance**	43-4.0	200 ft
	***Vertical Curvature, K-value**		
	Crest	44-3.0	Des: 29
	Sag	44-3.0	37
	Vertical Grades		
	***Maximum**	44-1.02	Level: 10%
	Minimum	44-1.03	Desirable: 0.5%, Minimum: 0.3%

* Indicates Level One controlling design criteria. A deviation from such is a design exception, and is subject to approval. See section 40-8.0

I-69 Section 6 Contract 5 Design Criteria

Route: Line "PR-Bluff Road"

Segment E

INDOT (des.) # 1901381

	DESIGN ELEMENT	INDIANA DESIGN MANUAL SECTION (2013 - English)	PROJECT-SPECIFIC CRITERIA DEFINITION
DESIGN CONTROLS	Functional Classification	40-1.01	Urban Local Street (Suburban)
	INDOT Geometric Design Table	Ch. 53	Figure 53-9
	Design Year Traffic, AADT (2045)	Fig. 40-2A	4,650
	Design Vehicle	Fig. 46-1E	Des: WB-50, Min: WB-40
	* Design Speed, mph	Fig. 53-9	30 mph
	Access Control	Fig. 53-9	None
	Level of Service	Fig. 53-9	Desirable: C; Minimum: D
CROSS SECTION ELEMENTS	Travel Lane		
	*Width	45-1.01	12 ft
	Surface Type	Ch. 304	Asphalt / Concrete
	Shoulder		
	*Width Usable	45-1.02	4 ft
	Surface Type	Ch. 304	Aggregate
	Cross Slope		
	*Travel Lane	45-1.01	2%
	Shoulder	45-1.02	4%
	Auxiliary Lanes		
	Lane Width	45-1.03	12 ft
	Shoulder Width	45-1.03	4 ft
	Shoulder Surface Type	45-1.03	Aggregate
	Clear Zone Width	49-2.0	14 ft
	Side Slopes		
	Cut Foreslope	45-3.0	3:1 Max.
	Cut Ditch Width	45-3.0	Des: 4 ft; Min: 0 ft
	Cut Backslope	45-3.0	3:1 Max.
	Fill	45-3.0	3:1 Max.
BRIDGES	New or Reconstructed Bridges		
	*Structural Capacity	Ch. 403	N/A
	*Clear-Roadway Width	45-4.01	N/A
	Bridge Railing Safety Performance	IDM Figure 49-6D	N/A
	Existing Bridges to Remain in Place		
	*Structural Capacity	Ch. 72	N/A
	*Clear-Roadway Width	45-4.01	N/A
	*Vertical Clearance (Local Under)		
	New or Replaced Overpassing Bridge	44-4.0	N/A
	Existing Overpassing Bridge	44-4.0	N/A
	Vertical Clearance, Freeway over Railroad	402-6.01	N/A
ALIGNMENT ELEMENTS	*Stopping Sight Distance	42-1.0	200 ft
	*Minimum Radius, e=6%	43-2.0	260 ft
	*Superelevation Rate	43-3.0	e_{max} = 4%
	*Horizontal Sight Distance	43-4.0	200 ft
	*Vertical Curvature, K-value		
	Crest	44-3.0	Des: 29
	Sag	44-3.0	37
	Vertical Grades		
	*Maximum	44-1.02	Level: 10%
	Minimum	44-1.03	Desirable: 0.5%, Minimum: 0.3%

* Indicates Level One controlling design criteria. A deviation from such is a design exception, and is subject to approval. See section 40-8.0

I-69 Section 6 Contract 5 Design Criteria
Route: Line "PR-Mt Pleasant W Street"
Segment E

INDOT (des.) # 1901381

	DESIGN ELEMENT	INDIANA DESIGN MANUAL SECTION (2013 - English)	PROJECT-SPECIFIC CRITERIA DEFINITION
DESIGN CONTROLS	**Functional Classification**	40-1.01	Urban Local Street (Suburban)
	INDOT Geometric Design Table	Ch. 53	Figure 55-3H
	Design Year Traffic, AADT (2045)	Fig. 40-2A	< 500
	Design Vehicle	Fig. 46-1E	Des: WB-50, Min: SU
	*** Design Speed, mph**	55-3H	25 mph
	Access Control	55-3H	None
	Level of Service	55-3H	Desirable: C; Minimum: D
CROSS SECTION ELEMENTS	**Travel Lane**		
	***Width**	55-4.05	11 ft
	Surface Type	Ch. 304	Asphalt / Concrete
	Shoulder		
	***Width Usable**	55-4.05	2 ft
	Surface Type	Ch. 304	Aggregate
	Cross Slope		
	***Travel Lane**	55-4.05	2%
	Shoulder	55-4.05	4%
	Clear Zone Width	49-2.0	10 ft
	Obstruction-Free Zone Width	55-5.02	8 ft
	Side Slopes		
	Cut Foreslope	55-4.05	2:1 or flatter
	Cut Ditch Width	55-4.05	Des: 4 ft; Min: 0 ft
	Cut Backslope	55-4.05	2:1 or flatter
	Fill	55-4.05	2:1 or flatter
BRIDGES	**New or Reconstructed Bridges**		
	***Structural Capacity**	Ch. 403	N/A
	***Clear-Roadway Width**	55-6.03	N/A
	Bridge Railing Safety Performance	IDM Figure 49-6D	N/A
	Existing Bridges to Remain in Place		
	***Structural Capacity**	Ch. 72	N/A
	***Clear-Roadway Width**	55-6.02	N/A
	***Vertical Clearance (Local Under)**		
	New or Replaced Overpassing Bridge	44-4.0	N/A
	Existing Overpassing Bridge	44-4.0	N/A
	Vertical Clearance, Freeway over Railroad	402-6.01	N/A
ALIGNMENT ELEMENTS	***Stopping Sight Distance**	42-1.0	155 ft
	***Minimum Radius, e=4%**	43-2.0	260 ft
	***Superelevation Rate**	43-3.0	e_{max} = 4%
	***Horizontal Sight Distance**	43-4.0	155 ft
	***Vertical Curvature, K-value**		
	Crest	44-3.0	Des: 29
	Sag	44-3.0	37
	Vertical Grades		
	***Maximum**	44-1.02	Commercial: 8%
	Minimum	44-1.03	Desirable: 0.5%, Minimum: 0.3%

* Indicates Level One controlling design criteria. A deviation from such is a design exception, and is subject to approval. See section 40-8.0

Attachment 08-2: Design Vehicle Classifications

Design Vehicle Classifications for Roadway Segments and Intersections

Segment	Location (Intersection)	Design Vehicle
A	NB & SB W. Mooresville Road	WB-65
B	Mann Road and Ramp Mann WBEX-C	IDV
B	Mann Road and Ramp Mann EBEN-C	IDV
B	Harding Street and Ramp Harding WBEN-C	IDV
B	Harding Street and Ramp Harding WBEX-C	IDV
B	Harding Street and Ramp Harding EBEN-C	IDV
B	Harding Street and Ramp Harding EBEX-C	IDV
C	EB I-74 Exit Ramp to SB S. East Street/US 31	WB-65
C	EB I-74 Exit Ramp to NB S. East Street/US 31	WB-65
C	WB I-465 Entrance Ramp from SB S. East Street	WB-65
C	NB & SB Madison Avenue	WB-65
C	NB & SB Carson Avenue	WB-75
D	Winslet Drive and Perry Commons	SU-30
D	Edgewood Avenue and Belmont Avenue	WB-50
D	Belmont Avenue and Banta Road	WB-50
D	Belmont Avenue and Lighthouse Landings	WB-50
D	Southport Road and Governors Point	WB-50
D	Southport Road and Wellingshire Blvd	WB-50
D	Southport Road and SB I-69 Ramp Terminals	IDV
D	Southport Road and NB I-69 Ramp Terminals	IDV
D	Southport Road and Winslet Blvd	IDV
D	Epler Avenue and Ramp Epler SBEN-C	IDV
D	Epler Avenue and Ramp Epler NBEX-C	IDV
D	Epler Avenue and Epler Connection-C	IDV
D	Epler Connection-C and Kopetsky Drive	WB-50
E	NB I-69 Exit Ramp to County Line Road	WB-65
E	NB I-69 Entrance Ramp from County Line Road	WB-65
E	SB I-69 Exit Ramp to County Line Road	WB-65
E	SB I-69 Entrance Ramp from County Line Road	WB-65
E	West County Line Road Roundabout	WB-65
E	East County Line Road Roundabout	WB-65
E	County Line Road & Morris Road	WB-50
E	West Connector Road & Glenns Valley Lane	WB-50
E	West Connector Road & Wicker Road	WB-65
E	Fairview Road Cul-de-sac	SU-30
E	Glenns Valley Lane Cul-de-sac	SU-30
E	Mt. Pleasant St. Three-Point Turn	SU-30

Attachment 08-2: Driveway Classifications

Driveway Classifications

Segment	Roadway	Location	Parcel No.	Type	Notes
A	No Driveways Required				
B	Thompson Road	4899 Mann Road	2003443	Class I (from cul-de-sac) Class II (West of State Ditch)	
B	South Concord Street & Byrkit Street	3037 W Thompson Rd	5007503	Hammerhead (Turnaround) Driveway	Layout shall match dimensions shown in Reference Plans. The minimum pavement design requirement shall match Local Roadways per TP Section 9.3.2.5.
B	Harding Court	1401 Harding Ct	5025733	2 - Class IV	
B	Harding Court	1245 Harding Ct	5025734	Class IV	
B	Harding Court	1101 Harding Ct	5028589	2 - Class IV	
B	Harding Court	1045 Harding Ct	5028590	2 - Class IV	
C	No Driveways Required				
D	Winslet Blvd	1741 W Southport Road	5014408	Class I	Residental Driveway
D	Belmont Road	2222 W Southport Road	5043316	Class III	Southport Shoppes
D	Banta Road	1900 W Banta Road	5026744	Class III	Indianapolis Power and Light
D	W Edgewood Drive	1951 W Edgewood Avenue	5041776	Class III	Lake Haven Retreat
D	W Edgewood Drive	6001 S Belmont Avenue	2015871	Class II	Gravel Driveway
D	W Edgewood Drive	5970 S. Belmont Avenue	5042987	Class III	Rose and Walker Supply
D	Epler Avenue	5320 S Belmont Ave	5004845, 5004846	Class III	The minimum pavement design requirement shall match Arterial Roadways per TP Section 9.3.2.5.
D	Epler Avenue	2041 W Epler Ave	5032553	Class III	
D	Epler Avenue	1780 W Epler Ave	5026666	Class III	
D	Epler Avenue	N/A	N/A	Class I	Cemetary
D	Epler Avenue	1750 W Epler Ave	5023480	2 - Class III	
D	Epler Avenue	1745 W Epler Ave	5035339	2 - Class I	
D	Epler Avenue	1735 W Epler Ave	5035340	Class II	
D	Epler Avenue	1740 W Epler Ave	5023944	Class IV	
E	County Line Road	5319 W County Line Rd	41-03-28-012-056.000-038	Class I	
E	County Line Road	5303 County Line Rd	41-03-28-012-055.000-038	Class I	
E	County Line Road	5303 County Line Rd / 5279 County Line Rd	41-03-28-012-054.000-038	Class I	
E	County Line Road	5279 County Line Rd	41-03-28-012-054.000-038	Class I	
E	County Line Road	2410 W County Line Rd	5014923	Class I	
E	County Line Road	2326 W County Line Rd	5014922	Class I	
E	Bluff Road	--	41-03-28-012-001.004-038	Partial Class IV	
E	Bluff Road	1229 N Bluff Rd	41-03-28-012-001.003-038	Class IV	
E	Bluff Road	1255 N Bluff Rd	41-03-28-012-065.000-038	Class IV	
E	Mt Pleasant Street	1255 N Bluff Rd	41-03-28-012-065.000-038	Class IV	
E	Glenns Valley Lane	2625 Glenns Valley Ln	5020132	Class IV	
E	Glenns Valley Lane	2625 Glenns Valley Ln	5020132	Class IV	
E	Glenns Valley Lane	2626 Glenns Valley Ln	5002236	Class IV	
E	Glenns Valley Lane	2616 Glenns Valley Ln	5040920	Class II	
E	Wicker Road	2780 Wicker Rd	5030851	Class I	
E	Wicker Road	2720 Wicker Rd	5037696	Class I	
E	Wicker Road	2625 Wicker Rd	5013563	Class I	
E	Wicker Road	2625 Wicker Rd	5022249	Class I	
E	Wicker Road	2620 Wicker Rd	5044242	Class I	

Attachment 08-2: Intersection Taper and Storage Length

Intersection Taper-Storage Length

Segment	Location (Intersection)	Turning Roadway	Storage (ft)	Decel (ft)	Taper (ft)
B	Mann Rd. and Ramp "Mann WBEX-C"	SB Left Turn	100	430	100
B	Mann Rd. and Ramp "Mann EBEX-C"	EB Left Turn	150	0	100
B	Harding St. and Ramp "Harding EBEX-C"	NB Left Turn	100	400	200
B	Harding St. and Ramp "Harding EBEX-C"	SB Right Turn	100	400	200
B	Harding St. and Ramp "Harding EBEN-C"	EB Left Turn	Match Existing		
B	Harding St. and Ramp "Harding EBEN-C"	EB Right Turn	Match Existing		
B	Harding St. and Ramp "Harding WBEN-C"	WB Right Turn	Match Existing		
B	Harding St. and Ramp "Harding WBEN-C"	WB Left Turn	Match Existing		
B	Harding St. and Ramp "Harding WBEX-C"	SB Left Turn	100	400	200
B	Harding St. and Ramp "Harding WBEX-C"	NB Right Turn	100	400	200
C	Madison Ave. and Drive (Indianapolis Christian Fellowship)	NB Left Turn	Match Existing		
C	Madison Ave. and Lick Creek Parkway South	SB Left Turn	Match Existing		
D	Epler Ave. and NB I-69 Ramp	NB Left Turn	100	430	100
D	Epler Ave. and SB I-69 Ramp	SB Right Turn	220	0	100
D	Southport Rd. and NB I-69 Ramps	WB Right Turn	600	0	100
D	Southport Rd. and NB I-69 Ramps	NB Left Turn	100	0	100
D	Southport Rd. and NB I-69 Ramps	NB Right Turn	280	430	100
D	Southport Rd. and SB I-69 Ramps	EB Right Turn	260	0	100
D	Southport Rd. and SB I-69 Ramps	SB Left Turn	240	0	100
D	Southport Rd. and SB I-69 Ramps	SB Right Turn	500	430	100
D	Existing SR 37 and Epler Ave.	Epler NE Right Turn	140	0	100
D	Existing SR 37 and Epler Ave.	Epler NW Right Turn	100	0	100
D	Existing SR 37 and Epler Ave.	Epler NW Left Turn	100	0	100
D	Existing SR 37 and Epler Ave.	SR 37 SW Left Turn	100	0	100
D	Epler Ave. and Kopetsky Dr.	WB Left Turn	100	0	100
D	Southport Rd. and Wellingshire Blvd.	EB Left Turn	360	0	100
D	Southport Rd. and Wellingshire Blvd.	EB Right Turn	360	0	100
D	Southport Rd. and Wellingshire Blvd.	WB Left Turn	300	0	100
D	Southport Rd. and Wellingshire Blvd.	WB Right Turn	300	0	100
D	Southport Rd. and Wellingshire Blvd.	NB Left Turn	100	0	100
D	Southport Rd. and Wellingshire Blvd.	NB Right Turn	100	0	100
D	Southport Rd. and Wellingshire Blvd.	SB Left Turn	100	0	100
D	Southport Rd. and Winslet Blvd.	EB Right Turn	100	0	100
D	Southport Rd. and Winslet Blvd.	WB Left Turn	180	0	100
D	Southport Rd. and Winslet Blvd.	Winslet NE Left Turn	100	0	100
D	Winslet Blvd. and Perry Commons Ave.	Winslet SW Left Turn	100	0	100
E	County Line Rd. and NB I-69 Entrance Ramp	WB Right Turn	650	0	100
E	Bluff Rd. and County Line Rd.	NB Right Turn	240	0	50
E	Wicker Rd. and West Connector Rd.	WB Left Turn	440	0	100
E	Wicker Rd. and West Connector Rd.	EB Right Turn	50	0	100
E	County Line Rd. and SB I-69 Exit Ramp	SB Left Turn	475	0	100

Attachment 08-2: Pedestrian Accommodations

Pedestrian Accommodations

Segment	Roadway	Alignment	RT/LT/Both ^^	Station		Buffer Width* (Feet)	Walking Width (Feet)	SW/SU**
				Start	End			
A	No Pedestrian Accommodations Required							
B	Epler Avenue	"PR-Epler"	Both	10+00	44+05	--	6	SW
B	Epler Connection	"PR-Epler Connection-C"	Both	10+00	19+22	--	6	SW
B	Bluff Rd	N/A	LT	NA	NA	--	10 ^	SU
C	Madison Avenue	"S-11-Z"	Both	19+31	23+66	--	6	SW
			Both	27+37	28+71	--	6	SW
D	S. Belmont Avenue	'Southport Connector - C'	LT	15+50	40+75	--	6	SW
D	Perry Commons Avenue	'Perry Commons'	RT	10+25	10+75	10 ***	5	SW
D	Winslet Blvd	'PR-Winslet Blvd'	RT	18+00	20+00	5	5	SW
D	Wellingshire Blvd	'PR-Wellingshire Blvd - C'	LT	10+00	14+50	5	5	SW
D	W. Banta Road	'PR-Banta Rd'	Both	50+95	52+50	5 ^	5 ^	SW
D	W. Edgewood Avenue	'PR-Edgewood Ave'	Both	50+90	52+55	5 ^	5 ^	SW
D	Governors Point Drive	N/A	Both	NA	NA	4.5 ***	4 ***	SW
D	W Southport Rd	'PR-Southport Rd - C'	LT	10+75	33+50	5	10	SU
			LT	33+50	37+00	--	10	SU
			LT	37+00	57+00	5	10	SU
			RT	17+00	17+70	Varies	5	SW
			RT	17+70	21+10	--	6	SW
			RT	21+10	21+75	5	5	SW
			RT	51+00	58+00	5	5	SW
E	Wicker Road	"PR-Wicker Road"	Both	51+00	69+00	--	6	SW
E	County Line Road	"PR-County Line Road"	RT	40+00	40+24	--	Varies 5.5 to 10	SU
			RT	40+24	41+00	--	10	SU
			RT	41+00	41+38	Varies 0 to 5	10	SU
			RT	41+38	57+77	5	10	SU

^ Future sidewalk accommodations. Construct with compacted gravel under the bridges.

^^ Right and Left designations are relative to the stationing direction

* Buffer width measured From 'back of curb' to 'face of walking surface'

** SW: Sidewalk / SU: Shared-use Path

*** Match existing sidewalk and buffer widths

Attachment 08-2: Pedestrian Crosswalk Accommodations

Pedestrian Crosswalk Accommodations

Segment	Intersection	Intersection Leg	Crosswalk Run	Ped Refuge	Min. Crosswalk Width (Feet)	SW/SU*
A	No Pedestrian Crosswalks Required					
B	Epler Avenue and Ramp Epler SBEN-C	South	East - West	No	6	SW
B	Epler Avenue and Ramp Epler NBEX-C	South	East - West	Yes	6	SW
B	Epler Avenue / Epler Connection	South	East - West	No	6	SW
B	Epler Avenue / Epler Connection	East	North - South	No	6	SW
C	No Pedestrian Crosswalks Required					
D	W Banta Rd / Graves Light Dr	West	North - South	No	6	SW
D	W Southport Rd / Wellingshire Blvd / Belmont Ave	North	East - West	Yes	10	SU
		West	North - South	No	5	SW
D	W Southport Rd / Governors Point Dr	North	East - West	No	10	SU
D	W Southport Rd / I-69 SB Exit Ramp	North	East - West	Yes	10	SU
D	W Southport Rd / I-69 NB Entrance Ramp	North	East - West	Yes	10	SU
D	W Southport Rd / Winslet Blvd	East	North - South	No	5	SW
D	Winslet Blvd / Perry Commons Ave	South	East - West	No	5	SW
E	Wicker Rd / West Connector Rd	South	East - West	No	6	SW
E	County Line Rd / West Service Rd 3	South	East - West	Yes	10	SU
E	County Line Rd / I-69 SB Entrance Ramp	South	East - West	No	10	SU
E	County Line Rd / Bluff Rd	South	East - West	Yes	10	SU

* SW: Sidewalk / SU: Shared-use Path

Attachment 08-2: Design Speed Diagrams

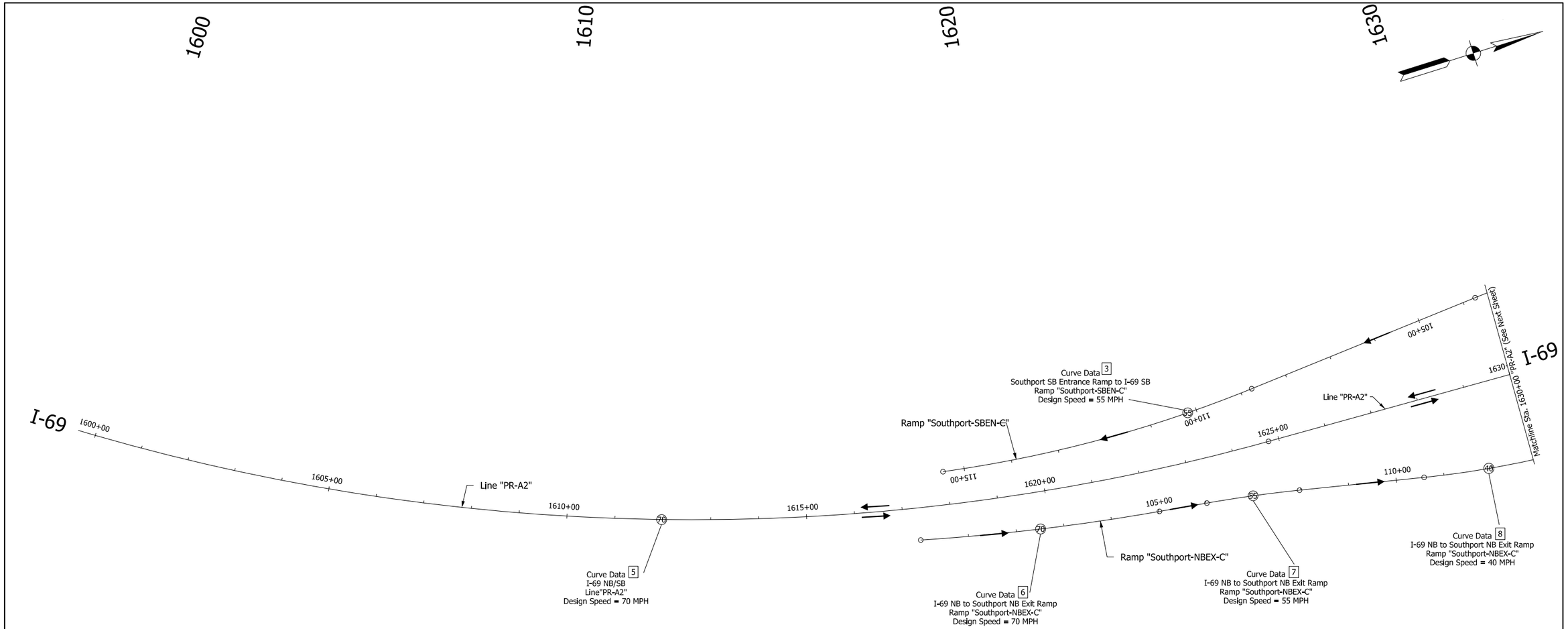

smain
11/22/2019 11:27:39 am
model: Sheet4
file: c:\cadd\proj\smain\great_lakes\d0227227\1801695-rd-s-rampdesignspeeds.dgn

DRAFT
NOT FOR CONSTRUCTION

RECOMMENDED FOR APPROVAL _____
DESIGN ENGINEER DATE

DESIGNED: SGM DRAWN: SGM
CHECKED: KRC CHECKED: KRC

INDIANA
DEPARTMENT OF TRANSPORTATION

DESIGN SPEED DIAGRAMS

HORIZONTAL SCALE	BRIDGE FILE
1"=100'	N/A
VERTICAL SCALE	DESIGNATION
N/A	1801695
SURVEY BOOK	SHEETS RDS-01
ELECTRONIC	of
CONTRACT	PROJECT
R-41536	1801695

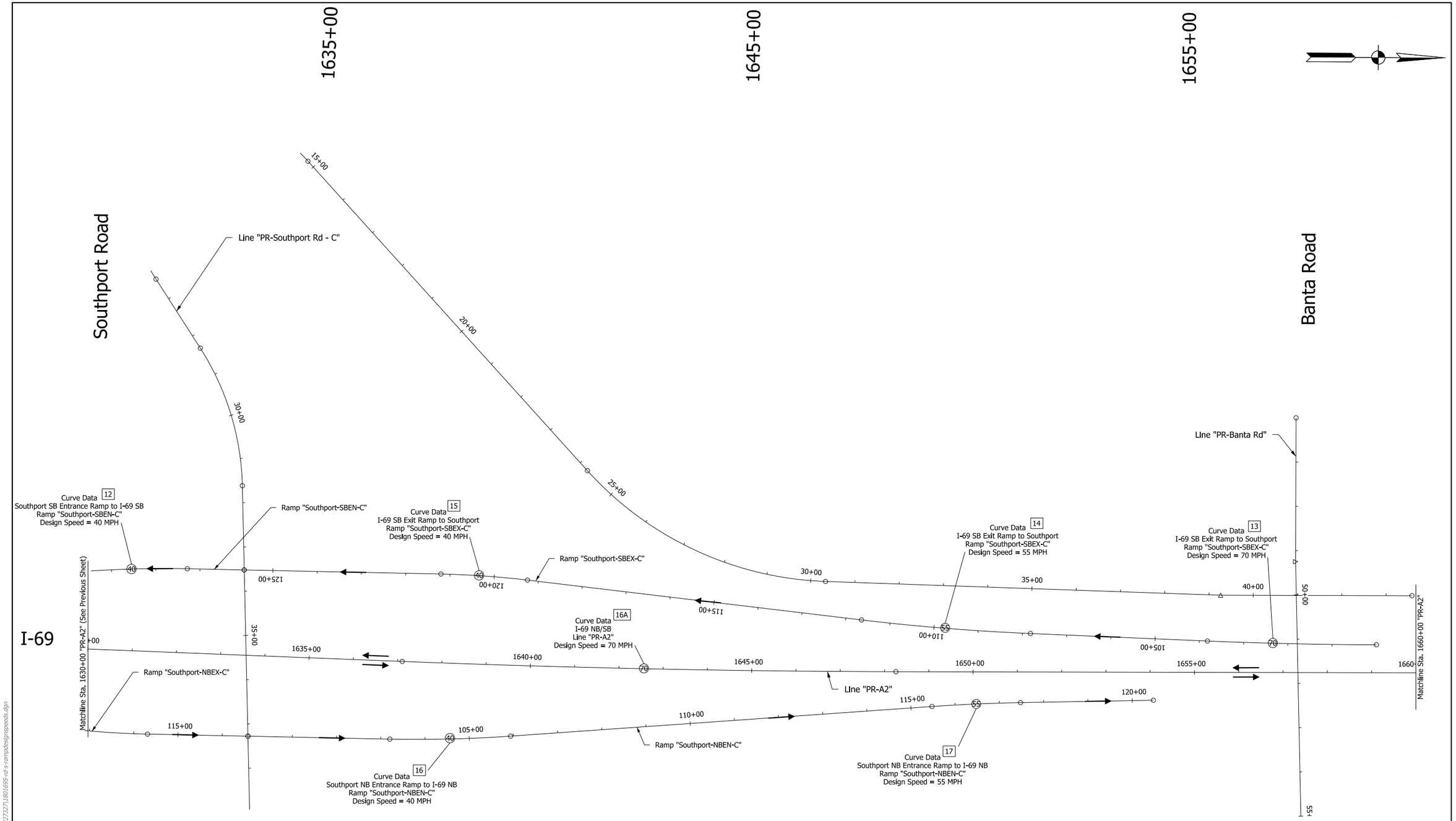

smain
11/22/2019 11:27:40 am
model: Sheet2
file: c:\cadd\dgn\smain\great_lakes\d0227227\1801695-rd-s-ramp\designspeeds.dgn

DRAFT
NOT FOR CONSTRUCTION

RECOMMENDED FOR APPROVAL _____ DESIGN ENGINEER _____ DATE

DESIGNED: SGM | DRAWN: SGM
CHECKED: KRC | CHECKED: KRC

INDIANA
DEPARTMENT OF TRANSPORTATION

DESIGN SPEED DIAGRAMS

HORIZONTAL SCALE	BRIDGE FILE
1"=100'	N/A
VERTICAL SCALE	DESIGNATION
N/A	1801695
SURVEY BOOK	SHEETS RDS-02
ELECTRONIC	of
CONTRACT	PROJECT
R-41536	1801695

Attachment 08-2: Design Speed Diagrams

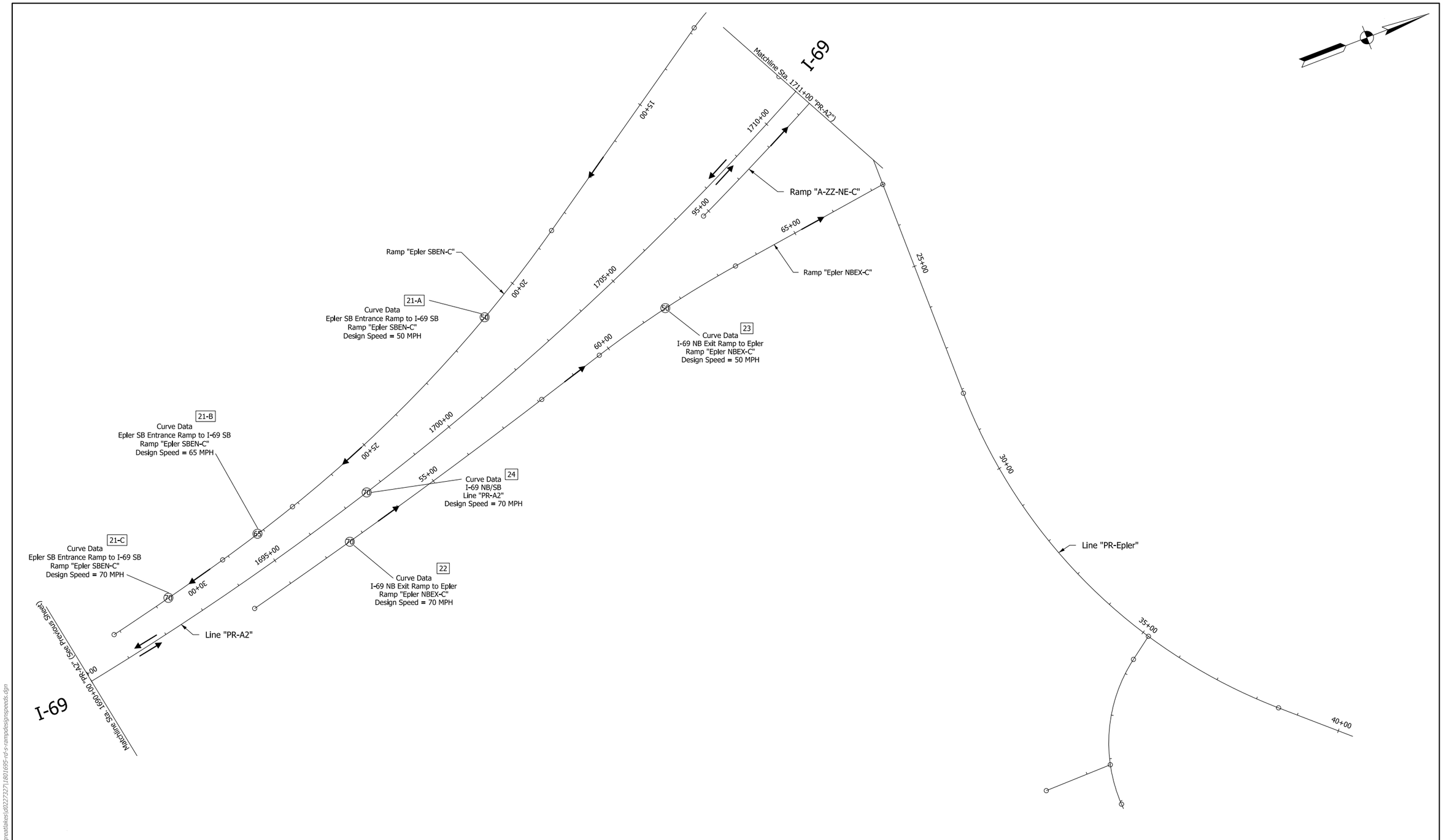

DRAFT
NOT FOR CONSTRUCTION

RECOMMENDED FOR APPROVAL _____ DESIGN ENGINEER DATE

DESIGNED: SGM | DRAWN: SGM

CHECKED: KRC | CHECKED: KRC

INDIANA
DEPARTMENT OF TRANSPORTATION

DESIGN SPEED DIAGRAMS

HORIZONTAL SCALE	BRIDGE FILE
1"=100'	N/A
VERTICAL SCALE	DESIGNATION
N/A	1801695
SURVEY BOOK	SHEETS RDS-03
ELECTRONIC	of
CONTRACT	PROJECT
R-41536	1801695

arosemeyer
3/3/2020 9:26:21 am
model: Sheet3
file: c:\cadd\pw\arosemeyer\greatlakes\d0227327\1801695-rd-s-rampdesignspeeds.dgn

Attachment 08-2: Design Speed Diagrams

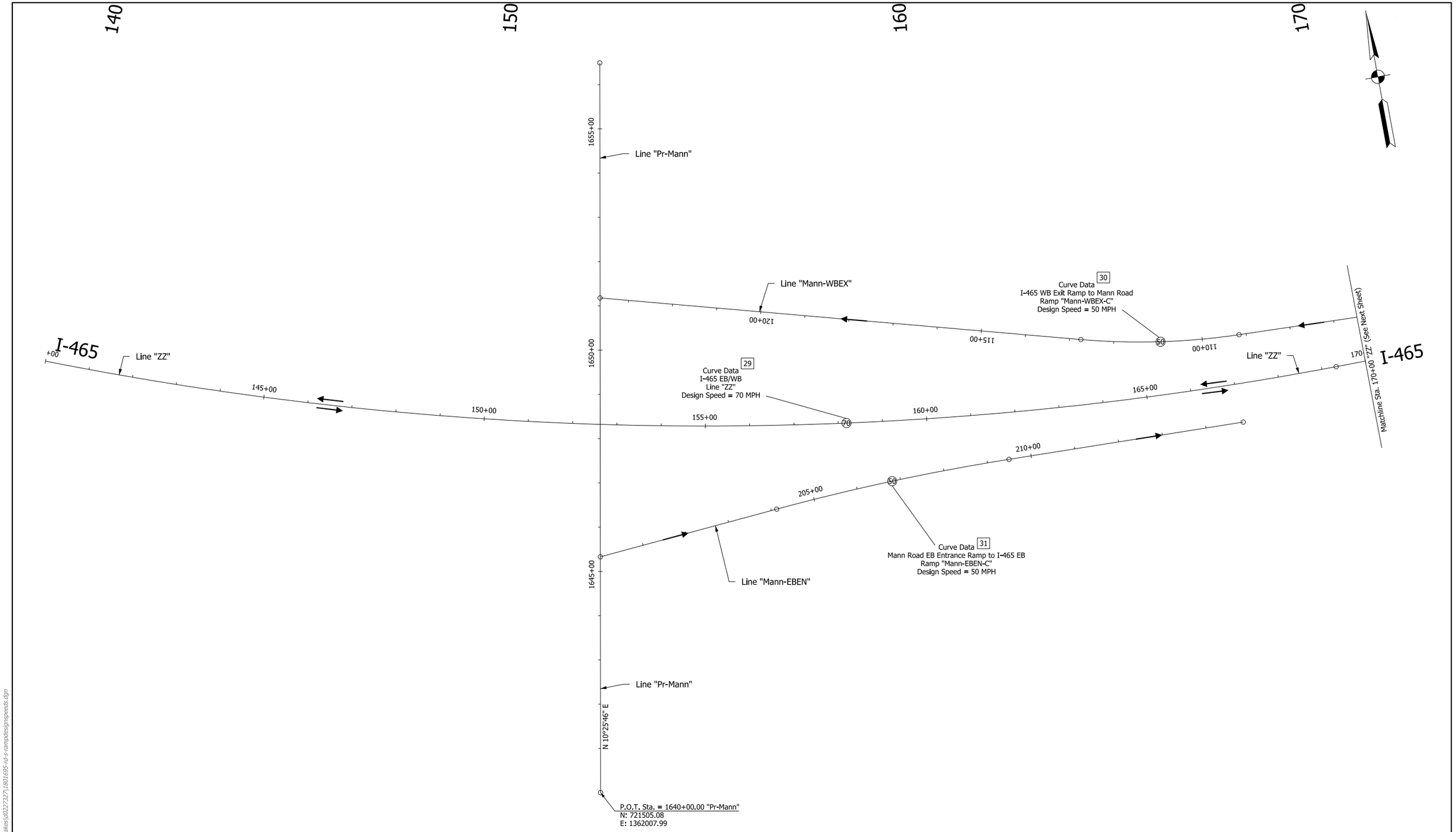

DRAFT
NOT FOR CONSTRUCTION

RECOMMENDED FOR APPROVAL _____ DESIGN ENGINEER DATE

DESIGNED: SGM DRAWN: SGM
CHECKED: KRC CHECKED: KRC

INDIANA
DEPARTMENT OF TRANSPORTATION

DESIGN SPEED DIAGRAMS

HORIZONTAL SCALE	BRIDGE FILE
1"=100'	N/A
VERTICAL SCALE	DESIGNATION
N/A	1801695
SURVEY BOOK	SHEETS RDS-04
ELECTRONIC	of
CONTRACT	PROJECT
R-41536	1801695

arosemeyer
3/3/2020 11:09:15 am
model: Sheet4
file: c:\caddlib\pw\arosemeyer\greatlakes\d0227327\1801695-rd-s-rampdesignspeeds.dgn

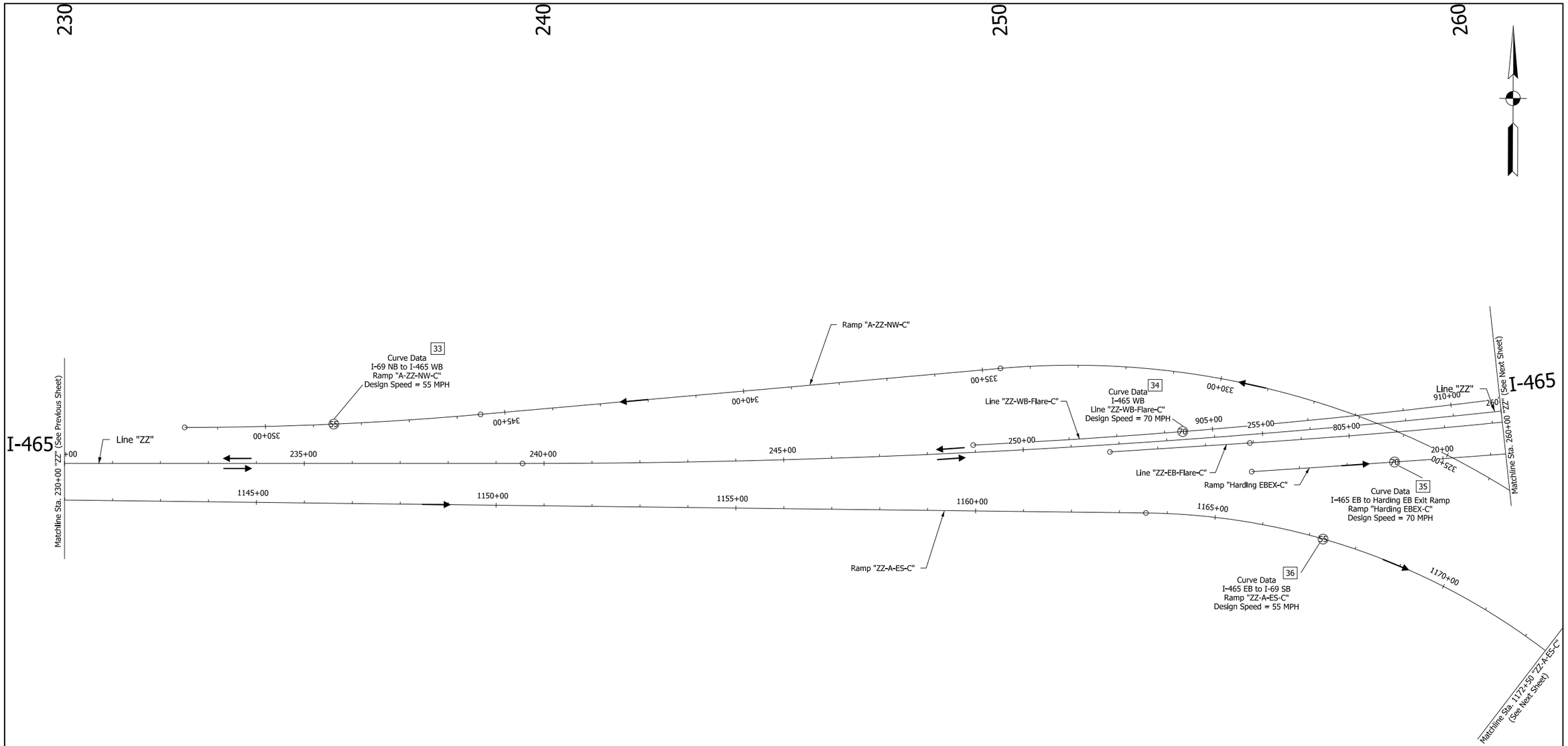

smain
11/22/2019 11:27:42 am
model: Sheet5
file: c:\cadlib\pwi\smain\great_lakes\d0223227\1801695-rd-s-ramp\designspeeds.dgn

DRAFT
NOT FOR CONSTRUCTION

RECOMMENDED FOR APPROVAL _____ DESIGN ENGINEER DATE

DESIGNED: SGM | DRAWN: SGM
CHECKED: KRC | CHECKED: KRC

INDIANA
DEPARTMENT OF TRANSPORTATION

DESIGN SPEED DIAGRAMS

HORIZONTAL SCALE	BRIDGE FILE
1"=100'	N/A
VERTICAL SCALE	DESIGNATION
N/A	1801695
SURVEY BOOK	SHEETS RDS-05
ELECTRONIC	of
CONTRACT	PROJECT
R-41536	1801695

Attachment 08-2: Design Speed Diagrams

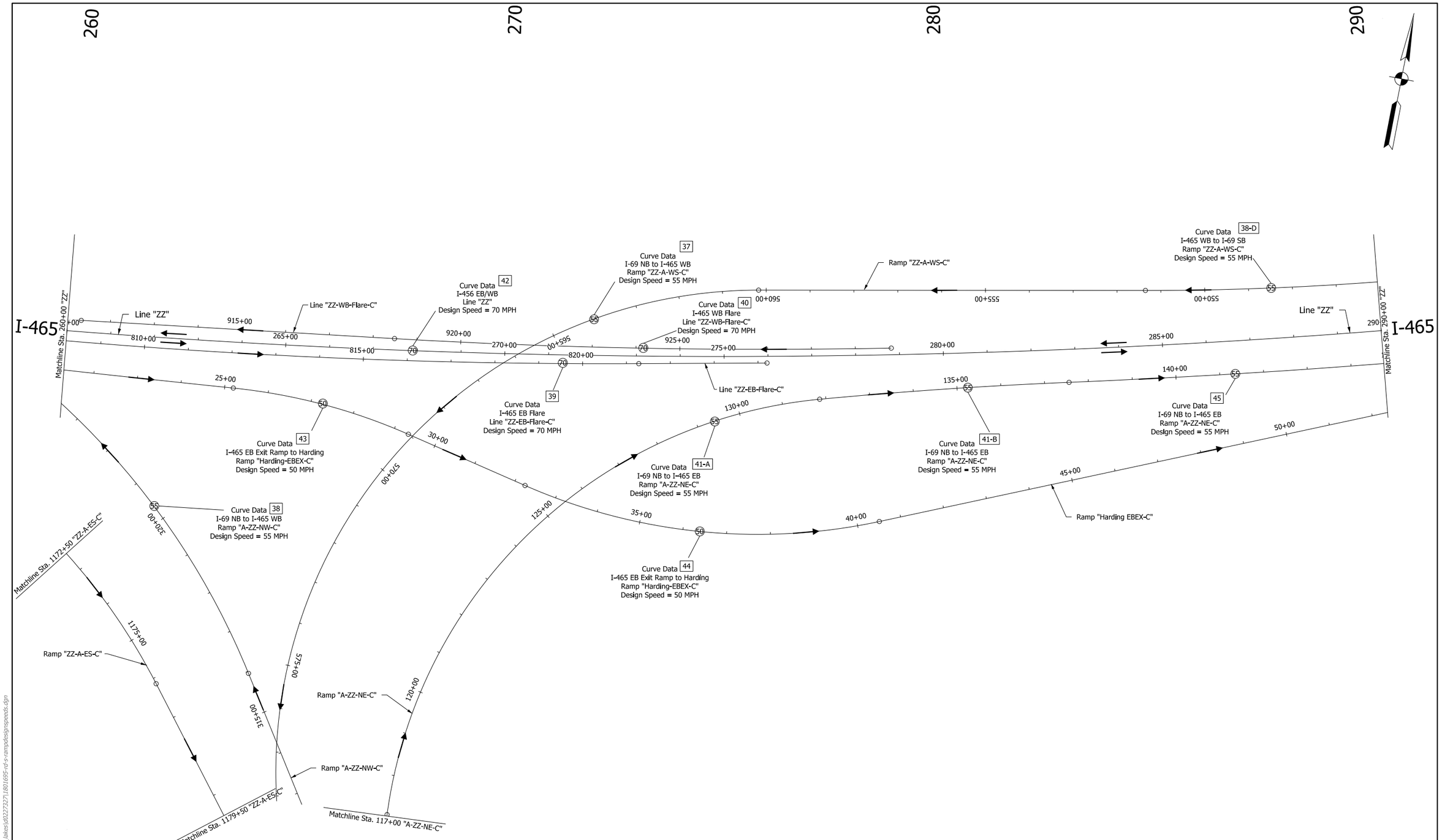

DRAFT
NOT FOR CONSTRUCTION

RECOMMENDED FOR APPROVAL _____ DESIGN ENGINEER DATE

DESIGNED: SGM DRAWN: SGM

CHECKED: KRC CHECKED: KRC

INDIANA
DEPARTMENT OF TRANSPORTATION

DESIGN SPEED DIAGRAMS

HORIZONTAL SCALE	BRIDGE FILE
1"=100'	N/A
VERTICAL SCALE	DESIGNATION
N/A	1801695
SURVEY BOOK	SHEETS RDS-06
ELECTRONIC	of
CONTRACT	PROJECT
R-41536	1801695

smain
11/22/2019 11:27:43 am
model: Sheet6
file: c:\caddlib\pw\smain\great_lakes\d0227327\1801695-rd-s-rampdesignspeeds.dgn

Attachment 08-2: Design Speed Diagrams

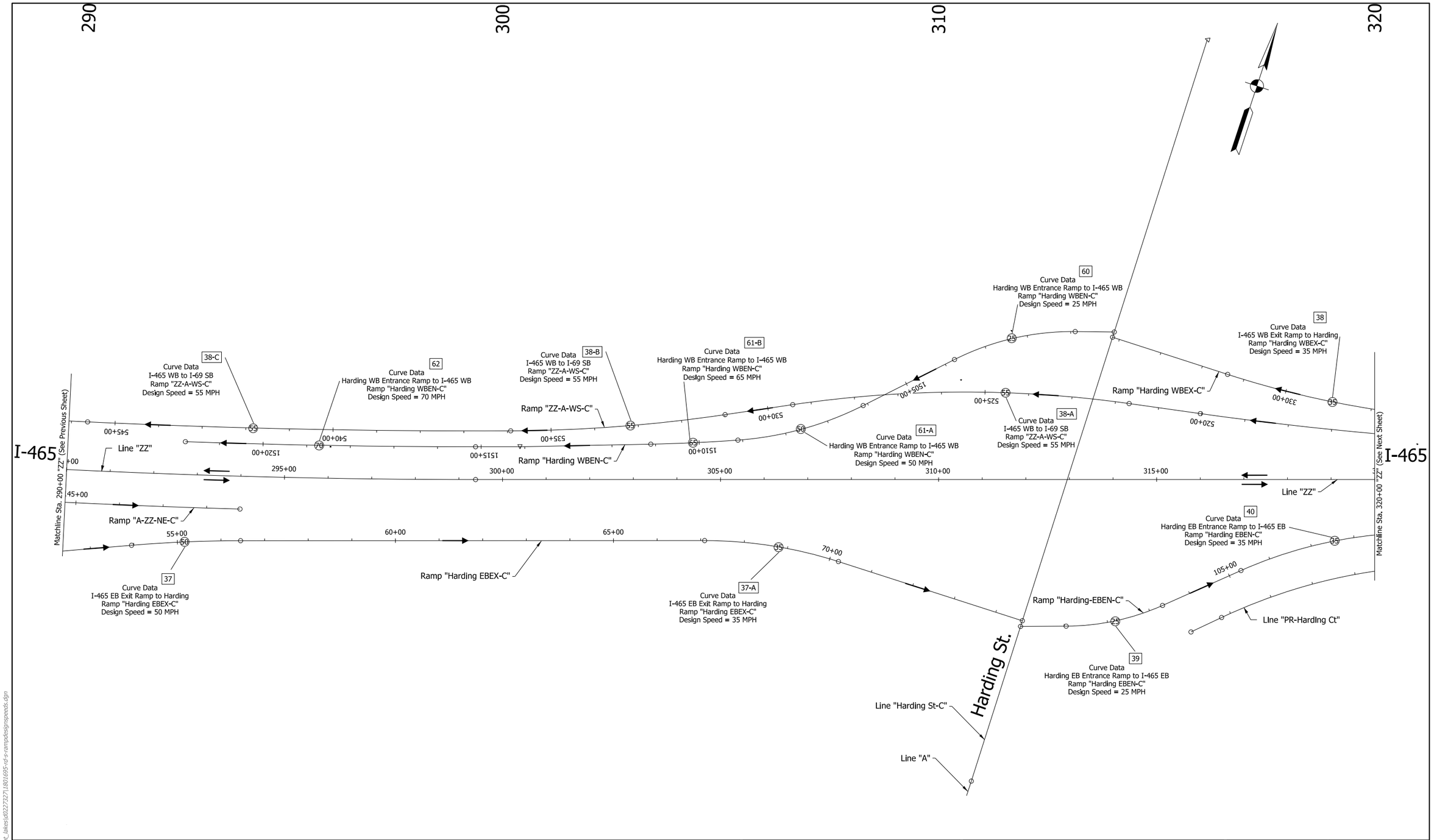

DRAFT
NOT FOR CONSTRUCTION

RECOMMENDED FOR APPROVAL _____ DESIGN ENGINEER DATE

DESIGNED: SGM DRAWN: SGM
CHECKED: KRC CHECKED: KRC

INDIANA
DEPARTMENT OF TRANSPORTATION

DESIGN SPEED DIAGRAMS

HORIZONTAL SCALE	BRIDGE FILE
1"=100'	N/A
VERTICAL SCALE	DESIGNATION
N/A	1801695
SURVEY BOOK	SHEETS RDS-07
ELECTRONIC	of
CONTRACT	PROJECT
R-41536	1801695

smain
11/22/2019 11:27:44 am
model: Sheet/
file: c:\cadd\proj\smain\great_lakes\d0227327\1801695-rd-s-rampdesignspeeds.dgn

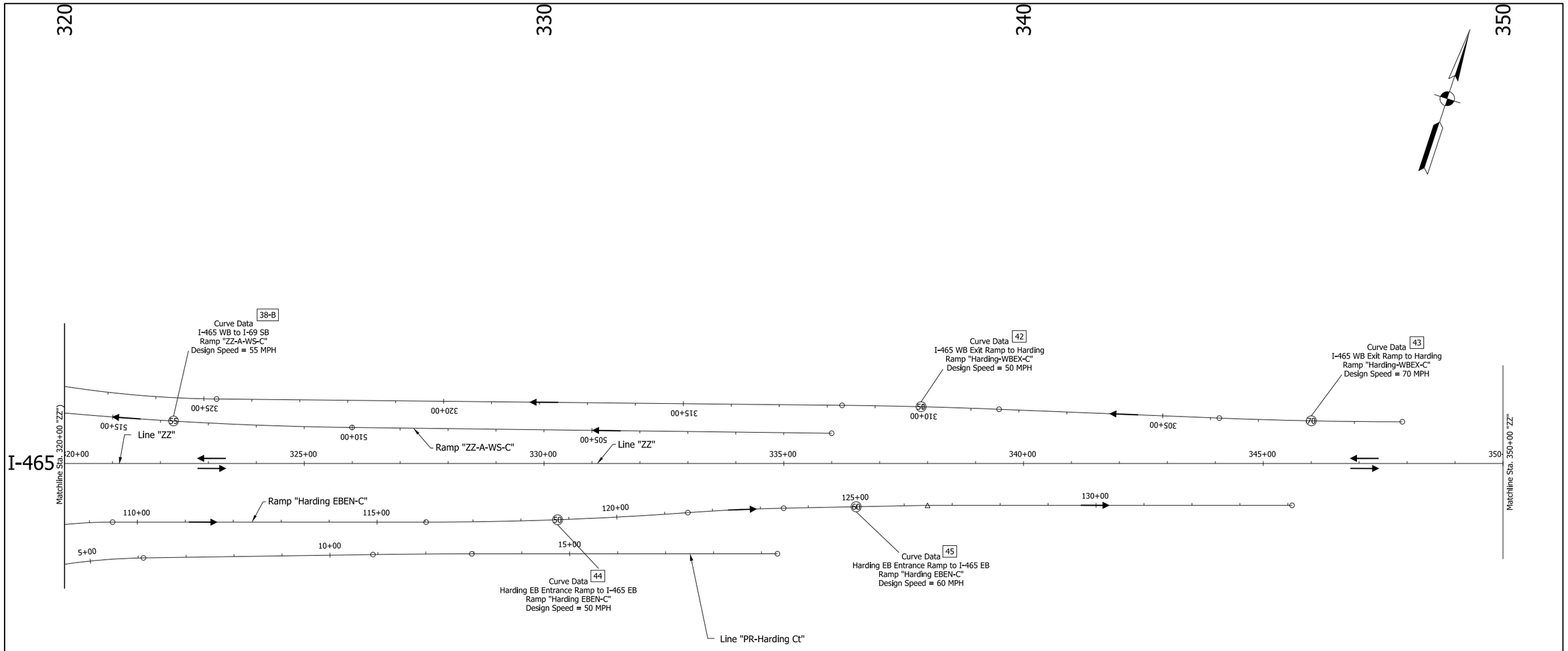

smain
11/22/2019 11:22:45 am
model: Sheet8
file: c:\cadd\pw\smain\great_lakes\d0227227\1801695-rd-s-rampdesignspeeds.dgn

DRAFT
NOT FOR CONSTRUCTION

RECOMMENDED FOR APPROVAL
DESIGN ENGINEER DATE

DESIGNED: SGM DRAWN: SGM
CHECKED: KRC CHECKED: KRC

INDIANA
DEPARTMENT OF TRANSPORTATION

DESIGN SPEED DIAGRAMS

HORIZONTAL SCALE	BRIDGE FILE
1"=100'	N/A
VERTICAL SCALE	DESIGNATION
N/A	1801695
SURVEY BOOK	SHEETS RDS-08
ELECTRONIC	of
CONTRACT	PROJECT
R-41536	1801695

Attachment 08-2: Design Speed Diagrams

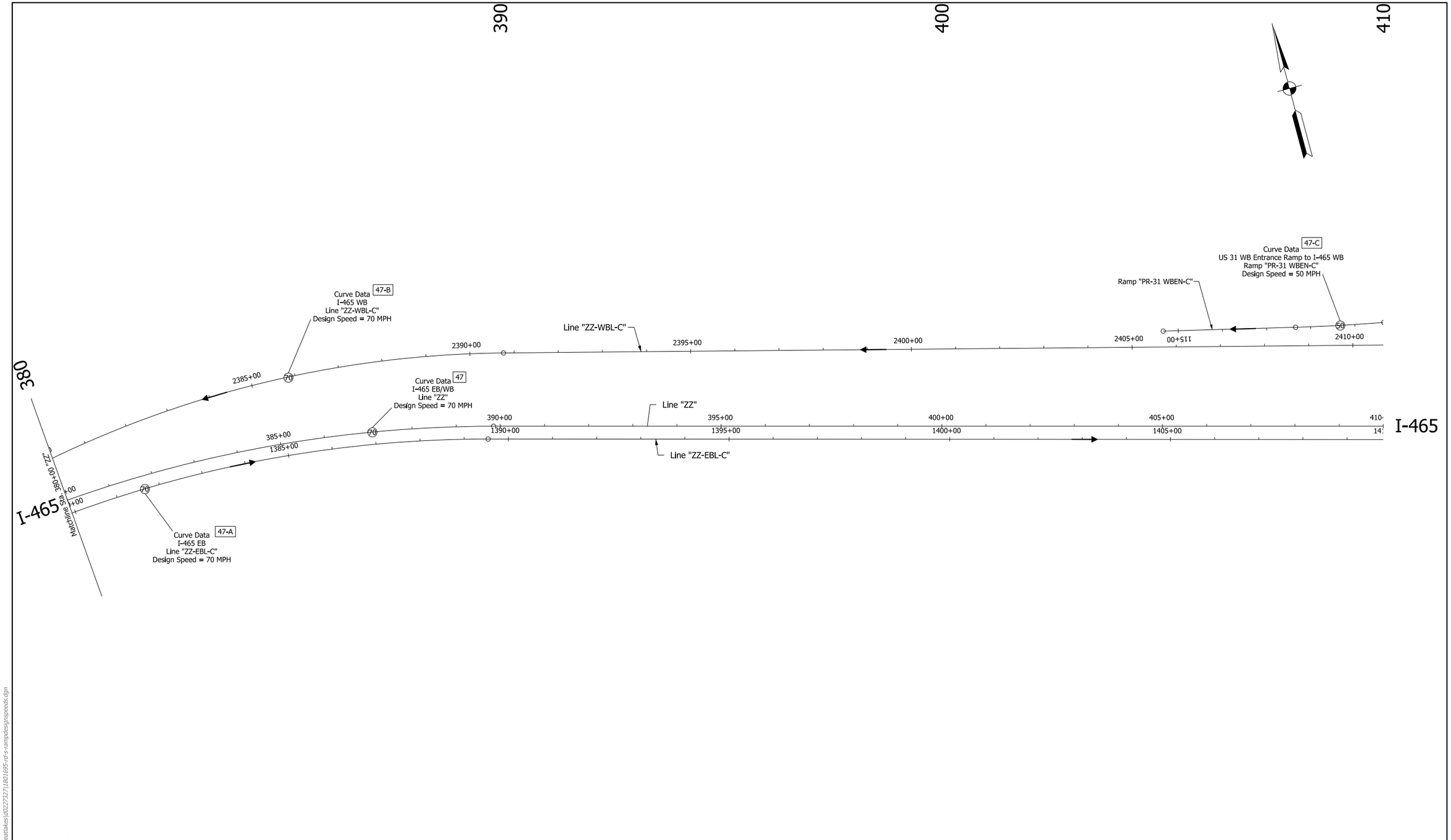

DRAFT
NOT FOR CONSTRUCTION

RECOMMENDED FOR APPROVAL _____ DESIGN ENGINEER DATE

DESIGNED: SGM DRAWN: SGM

CHECKED: KRC CHECKED: KRC

INDIANA
DEPARTMENT OF TRANSPORTATION

DESIGN SPEED DIAGRAMS

HORIZONTAL SCALE	BRIDGE FILE
1"=100'	N/A
VERTICAL SCALE	DESIGNATION
N/A	1801695
SURVEY BOOK	SHEETS RDS-09
ELECTRONIC	of
CONTRACT	PROJECT
R-41536	1801695

arosemeyer
3/3/2020 11:08:28 am
model: Sheet9
file: c:\caddlib\pw\arosemeyer\greatlakes\d0227327\1801695-rd-s-rampdesignspeeds.dgn

Attachment 08-2: Design Speed Diagrams

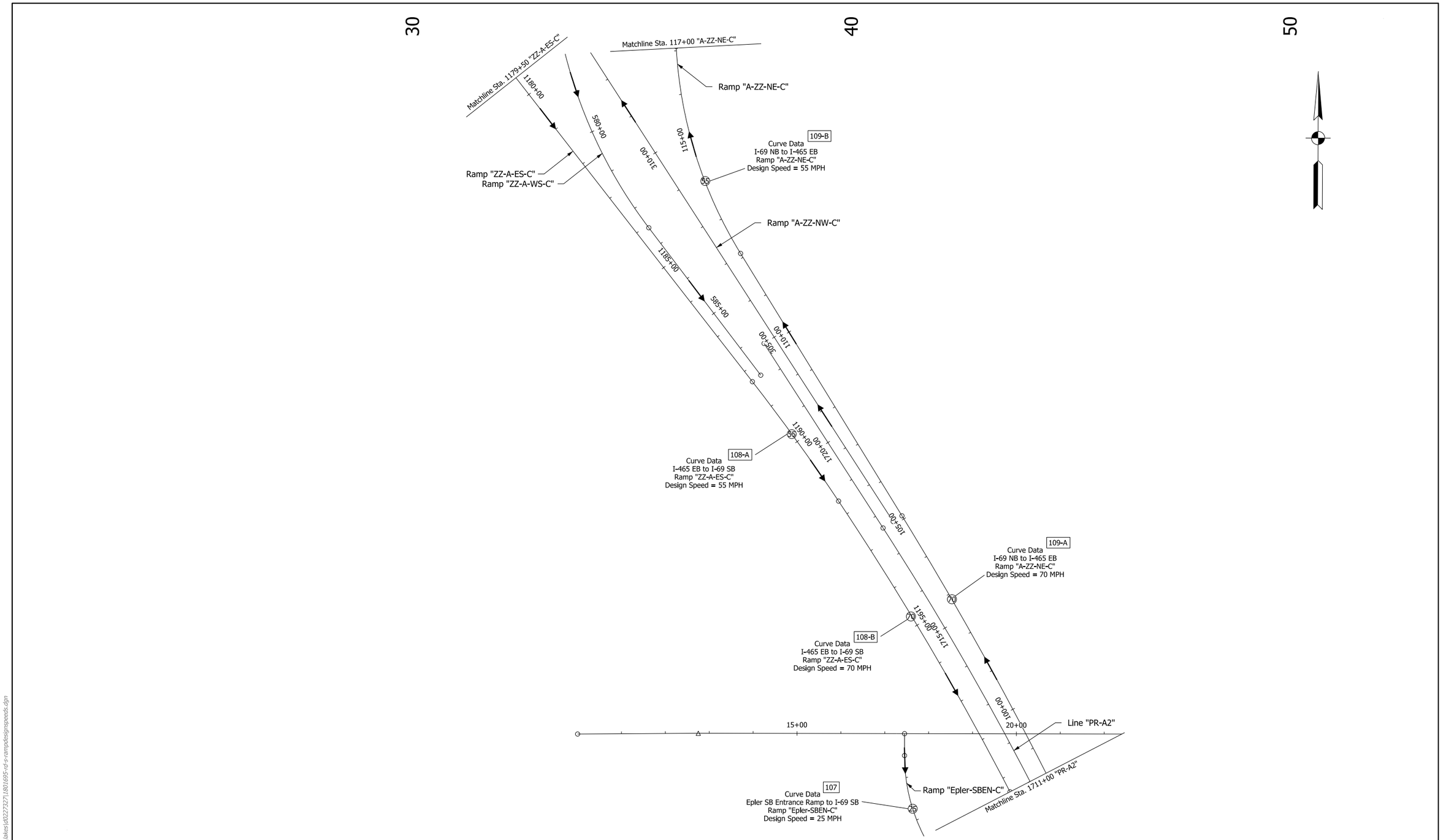

smain
11/22/2019 11:27:46 am
model: Sheet10
file: c:\cadd\pw\smain\great_lakes\d0222727\1801695-rd-s-rampdesignspeeds.dgn

DRAFT
NOT FOR CONSTRUCTION

RECOMMENDED FOR APPROVAL _____ DESIGN ENGINEER DATE

DESIGNED: SGM | DRAWN: SGM
CHECKED: KRC | CHECKED: KRC

INDIANA
DEPARTMENT OF TRANSPORTATION

DESIGN SPEED DIAGRAMS

HORIZONTAL SCALE	BRIDGE FILE
1"=100'	N/A
VERTICAL SCALE	DESIGNATION
N/A	1801695
SURVEY BOOK	SHEETS RDS-10
ELECTRONIC	of
CONTRACT	PROJECT
R-41536	1801695

Attachment 08-2: Design Speed Diagrams

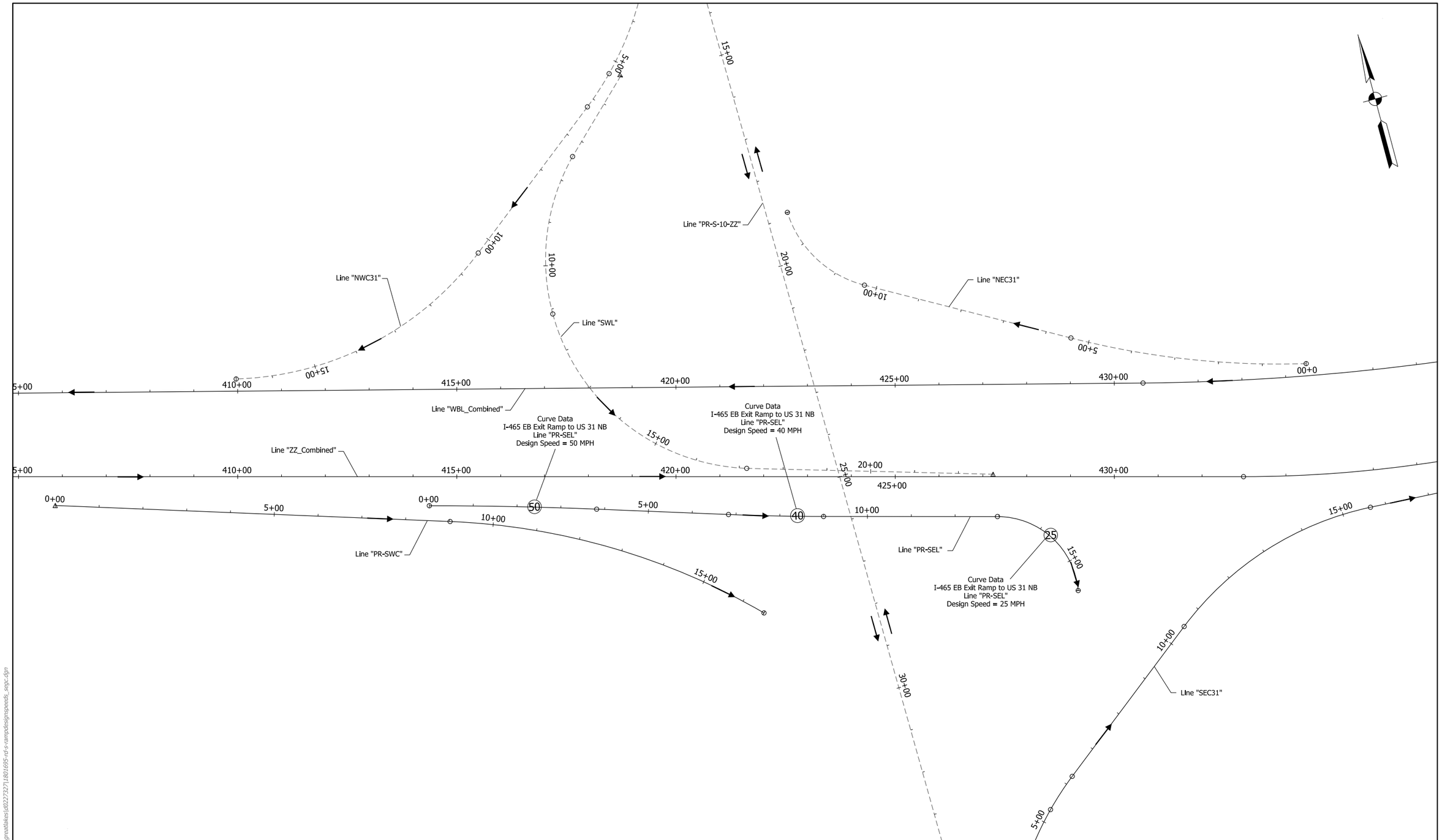

DRAFT
NOT FOR CONSTRUCTION

RECOMMENDED FOR APPROVAL _____ DESIGN ENGINEER DATE

DESIGNED: SGM DRAWN: SGM
CHECKED: KRC CHECKED: KRC

INDIANA
DEPARTMENT OF TRANSPORTATION

DESIGN SPEED DIAGRAMS

HORIZONTAL SCALE	BRIDGE FILE
1"=100'	N/A
VERTICAL SCALE	DESIGNATION
N/A	1801695
SURVEY BOOK	SHEETS RDS-01
ELECTRONIC	of
CONTRACT	PROJECT
R-41536	1801695

arosemeyer
3/3/2020 2:05:04 pm
model: Sheet1
file: c:\cadd\pw\arosemeyer\greatlakes\d0227327\1801695-rd-s-rampdesignspeeds_sgpc.dgn

Attachment 08-2: Design Speed Diagrams

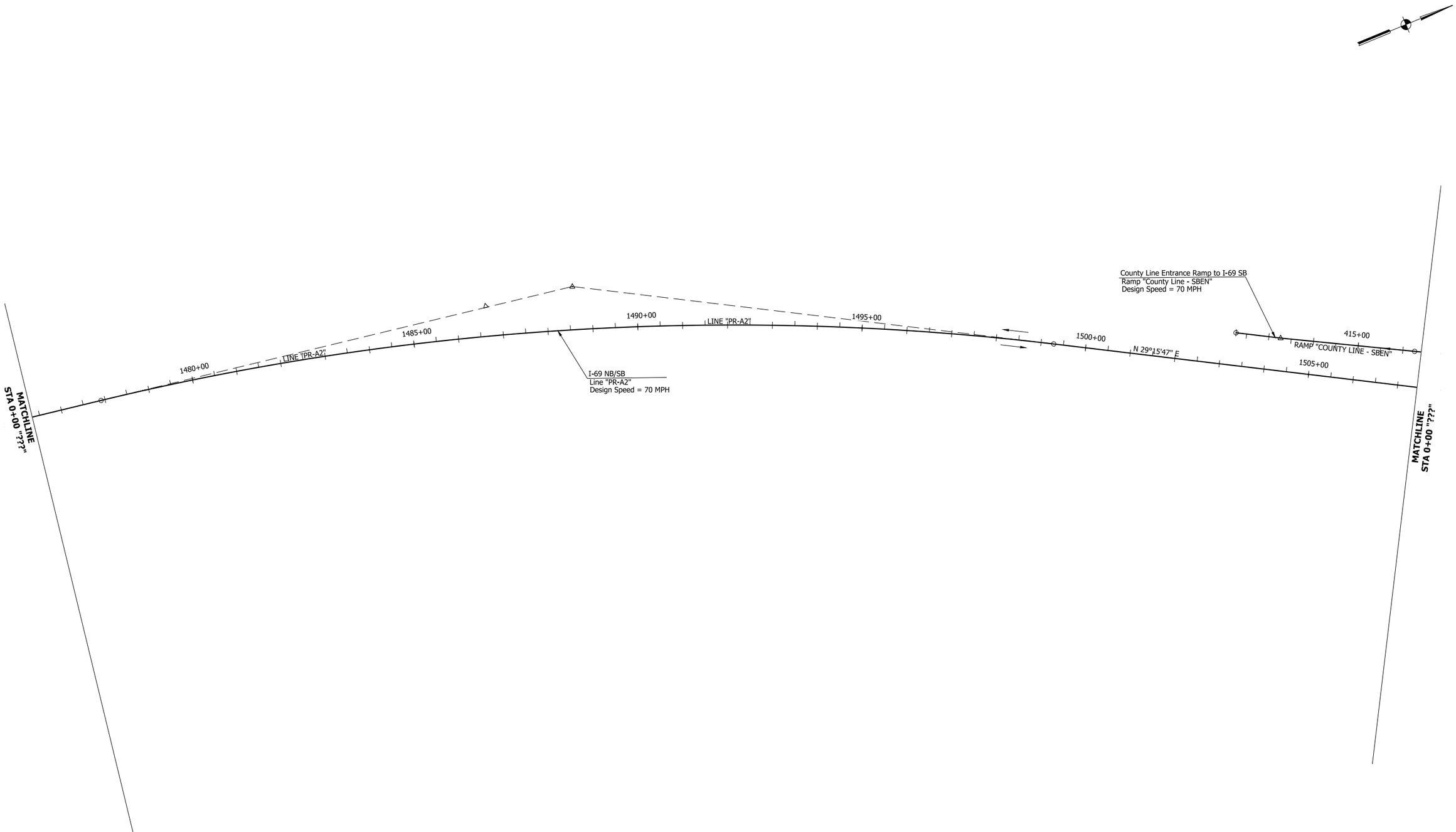

File Name: P:\C3D\19-469\Road\Dwg\Plans\Design Speed.dwg Plot Date: 11/25/2019 Plotted By: Andrew Walka

UNITED Consulting

8440 Allison Pointe Boulevard, Suite 200
Indianapolis, IN 46250
Phone 317-895-2585
www.ucindy.com

DRAFT
NOT FOR CONSTRUCTION

RECOMMENDED FOR APPROVAL
DESIGN ENGINEER DATE

DESIGNED: BSH
DRAWN: HSW
CHECKED: BJP
CHECKED: BJP

INDIANA
DEPARTMENT OF TRANSPORTATION

DESIGN SPEED DIAGRAMS

HORIZONTAL SCALE	BRIDGE FILE
1" = 100'	-
VERTICAL SCALE	DESIGNATION
N/A	1901381
SURVEY BOOK	SHEETS
-	- of -
CONTRACT	PROJECT
R-41536	1801695

Attachment 08-2: Design Speed Diagrams

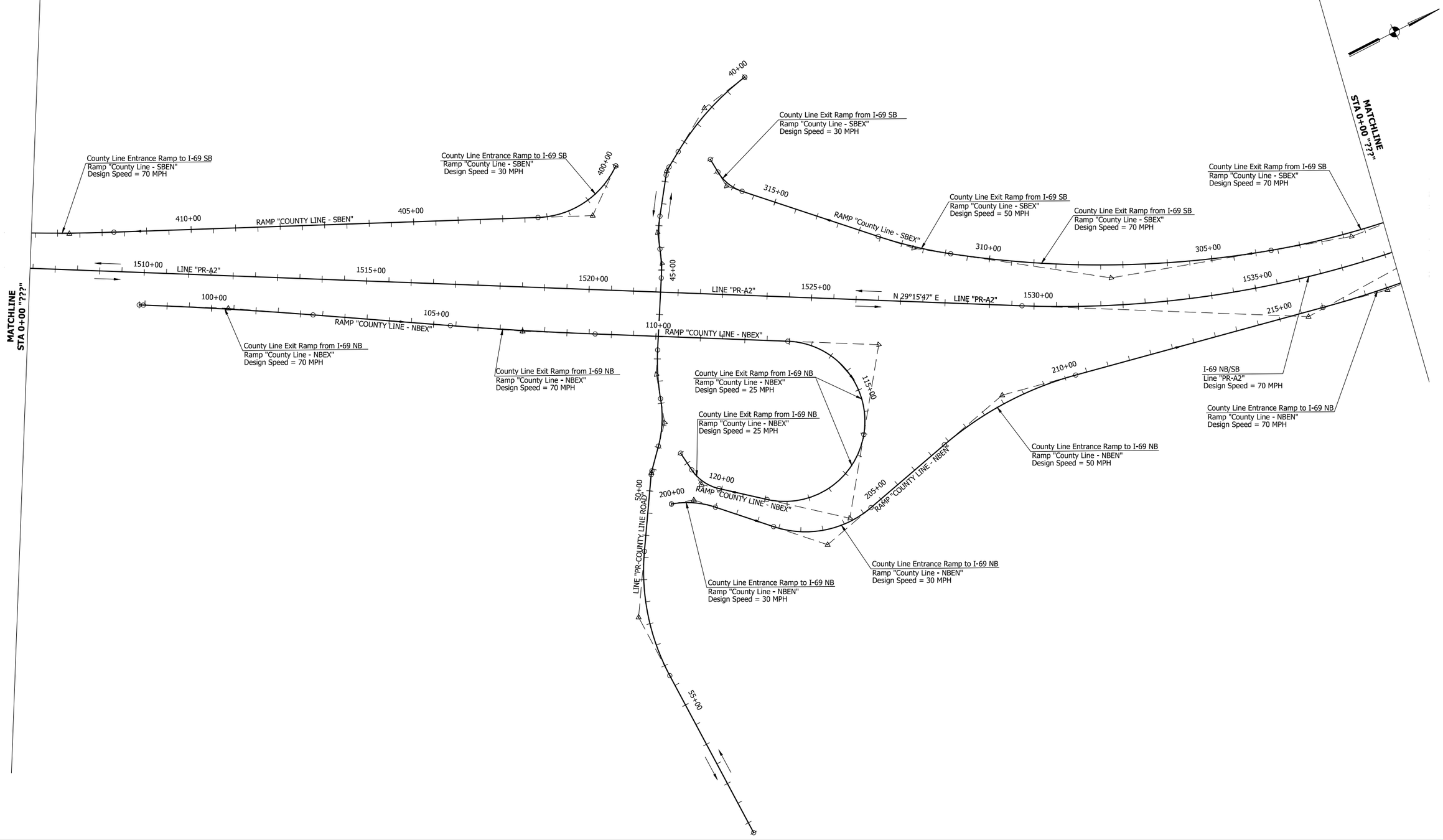

UNITED Consulting

8440 Allison Pointe Boulevard, Suite 200
Indianapolis, IN 46250
Phone 317-895-2585
www.ucindy.com

DRAFT
NOT FOR CONSTRUCTION

RECOMMENDED FOR APPROVAL
DESIGN ENGINEER DATE

DESIGNED: BSH DRAWN: HSW
CHECKED: BJP CHECKED: BJP

INDIANA
DEPARTMENT OF TRANSPORTATION

DESIGN SPEED DIAGRAMS

HORIZONTAL SCALE	BRIDGE FILE
1" = 100'	-
VERTICAL SCALE	DESIGNATION
N/A	1901381
SURVEY BOOK	SHEETS
-	- of -
CONTRACT	PROJECT
R-41536	1801695

File Name: P:\C3D\19-469\Road\Dwg\Plans\Design Speed.dwg Plot Date: 11/25/2019 Plotted By: Andrew Wolka

Attachment 08-2: Design Speed Diagrams

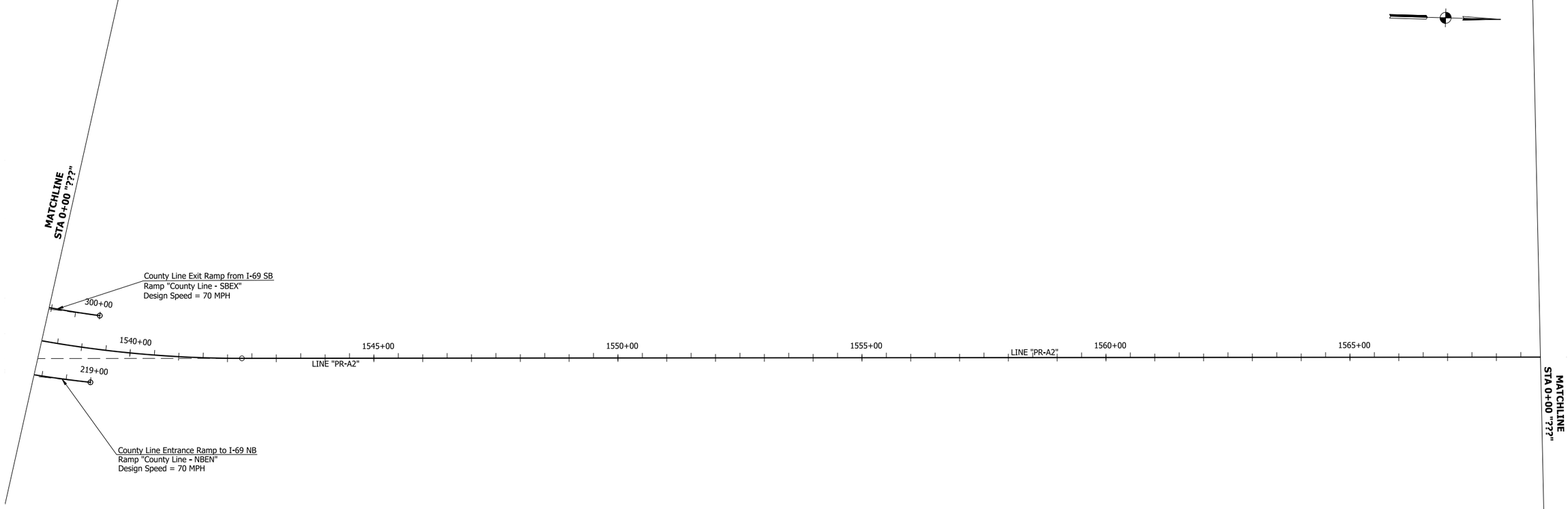

File Name: P:\C30\19-469\Road\Dwg\Plans\Design Speed.dwg Plot Date: 11/25/2019 Plotted By: Andrew Wolka

UNITED Consulting

8440 Allison Pointe Boulevard, Suite 200
Indianapolis, IN 46250
Phone 317-895-2585
www.ucindy.com

DRAFT
NOT FOR CONSTRUCTION

RECOMMENDED FOR APPROVAL
DESIGN ENGINEER DATE

DESIGNED: BSH
DRAWN: HSW
CHECKED: BJP
CHECKED: BJP

INDIANA
DEPARTMENT OF TRANSPORTATION

DESIGN SPEED DIAGRAMS

HORIZONTAL SCALE	BRIDGE FILE
1" = 100'	-
VERTICAL SCALE	DESIGNATION
N/A	1901381
SURVEY BOOK	SHEETS
-	- of -
CONTRACT	PROJECT
R-41536	1801695

LEVEL ONE DESIGN EXCEPTION REQUEST

July 3, 2019

MEMORANDUM

TO: John Wright JW
Director, Highway Design ☒ Bridge ☐

THRU: Anne Rearick AMR 8/26/19
Director, Greenfield District Capital Program Management

THRU: Abell Gelaye. P.E
Project Reviewer AG 7/26/19

THRU: Brian Shattuck
Project Manager

FROM: Cody Beucler, P.E.
Designer

SUBJECT: Design Exception Request for Superelevation Transition Length
Des. No.: 1802075
Route No. or Road Name: I-465
PE Project No.: 1802075
Structure No.: N/A

Transmitted, herewith, is a Design Exception request for the above referenced project. The documentation has been reviewed for compliance with the Design Exception requirements included in *Indiana Design Manual* Section 40-8.0. Based on the analysis of the substandard Level One design features, we believe that the design exception is justified and we therefore recommend approval.

Concur: John Wright Date 8/27/19
Director, Highway Design ☒
Director, Bridge ☐

FHWA oversight required: Yes ☒ No ☐

Approved: _____ Date 12/4/19 - For Segments A&C
for Division Administrator

INDOT Design Exception Database Information
Des. No.:
Request Date:
Approved ☐ Rejected ☐
Commitment Made: Yes ☐ No ☐

cc: , Director, Highway Design ☐ Bridge ☐
file

LEVEL ONE DESIGN EXCEPTION REQUEST

July 3, 2019

MEMORANDUM

TO: John Wright JW
Director, Highway Design ☒ Bridge ☐

THRU: Anne Rearick ARR 8/26/19
Director, Greenfield District Capital Program Management

THRU: Abell Gekye
Project Reviewer 7/25/19

THRU: Brian Shattuck
Project Manager

FROM: Cody Beucler, P.E.
Designer

SUBJECT: Design Exception Request for Superelevation Rate
Des. No.: 1802075
Route No. or Road Name: I-465
PE Project No.: 1802075
Structure No.: N/A

Transmitted, herewith, is a Design Exception request for the above referenced project. The documentation has been reviewed for compliance with the Design Exception requirements included in *Indiana Design Manual* Section 40-8.0. Based on the analysis of the substandard Level One design features, we believe that the design exception is justified and we therefore recommend approval.

Concur: John Wright Date 8/27/19
Director, Highway Design ☒
Director, Bridge ☐

FHWA oversight required: Yes ☒ No ☐

Approved: for Division Administrator Date 12/4/19 - for Segments A & C

INDOT Design Exception Database Information
Des. No.:
Request Date:
Approved ☐ Rejected ☐
Commitment Made: Yes ☐ No ☐

cc: , Director, Highway Design ☐ Bridge ☐
file

LEVEL ONE DESIGN EXCEPTION REQUEST

July 3, 2019

MEMORANDUM

TO: John Wright JW
Director, Highway Design ☒ Bridge ☐

THRU: Anne Rearick AMR 8/26/19
Director, Greenfield District Capital Program Management

THRU: Abell Gelaye
Project Reviewer AG 7/26/19

THRU: Brian Shattuck
Project Manager

FROM: Cody Beucler, P.E.
Designer

SUBJECT: Design Exception Request for Inside Shoulder Width
Des. No.: 1802075
Route No. or Road Name: I-465
PE Project No.: 1802075
Structure No.: N/A

Transmitted, herewith, is a Design Exception request for the above referenced project. The documentation has been reviewed for compliance with the Design Exception requirements included in *Indiana Design Manual* Section 40-8.0. Based on the analysis of the substandard Level One design features, we believe that the design exception is justified and we therefore recommend approval.

Concur: John Wright Date 8/27/19
Director, Highway Design ☒
Director, Bridge ☒

FHWA oversight required: Yes ☒ No ☐

Approved: _____ Date 12/4/19 for Segments A & C
For Division Administrator

INDOT Design Exception Database Information
Des. No.:
Request Date:
Approved ☐ Rejected ☐
Commitment Made: Yes ☐ No ☐

cc: , Director, Highway Design ☐ Bridge ☐
file

LEVEL ONE DESIGN EXCEPTION REQUEST

July 3, 2019

MEMORANDUM

TO: John Wright JW
Director, Highway Design ☒ Bridge ☐

THRU: Anne Rearick AMR 8/26/19
Director, Greenfield District Capital Program Management

THRU: Abell Gelaye
Project Reviewer AG 7/26/19

THRU: Brian Shattuck
Project Manager

FROM: Cody Beucler, P.E.
Designer

SUBJECT: Design Exception Request for Outside Shoulder Width
Des. No.: 1802075
Route No. or Road Name: I-465
PE Project No.: 1802075
Structure No.: N/A

Transmitted, herewith, is a Design Exception request for the above referenced project. The documentation has been reviewed for compliance with the Design Exception requirements included in *Indiana Design Manual* Section 40-8.0. Based on the analysis of the substandard Level One design features, we believe that the design exception is justified and we therefore recommend approval.

Concur: John Wright Date 8/27/19
Director, Highway Design ☒
Director, Bridge ☐

FHWA oversight required: Yes ☒ No ☐

Approved: _____ Date 12/4/19 - For Under the Railroad bridge east of Madison Ave. Only.
For Division Administrator

INDOT Design Exception Database Information
Des. No.:
Request Date:
Approved ☐ Rejected ☐
Commitment Made: Yes ☐ No ☐

cc: , Director, Highway Design ☐ Bridge ☐
file

LEVEL ONE DESIGN EXCEPTION REQUEST

July 3, 2019

MEMORANDUM

TO: John Wright JW
Director, Highway Design ☒ Bridge ☐

THRU: Anne Rearick AnR 8/26/19
Director, Greenfield District Capital Program Management

THRU: Abell Gelaye
Project Reviewer AG 7/26/19

THRU: Brian Shattuck
Project Manager

FROM: Cody Beucler, P.E.
Designer

SUBJECT: Design Exception Request for Horizontal Stopping Sight Distance
Des. No.: 1802075
Route No. or Road Name: I-465
PE Project No.: 1802075
Structure No.: N/A

Transmitted, herewith, is a Design Exception request for the above referenced project. The documentation has been reviewed for compliance with the Design Exception requirements included in *Indiana Design Manual* Section 40-8.0. Based on the analysis of the substandard Level One design features, we believe that the design exception is justified and we therefore recommend approval.

Concur: John Wright Date 8/27/19
Director, Highway Design ☒
Director, Bridge ☐

FHWA oversight required: Yes ☒ No ☐

Approved: [signature] Date 12/4/19 - As part of mitigation, Lighting is being provided throughout - Segments A, B, C + D.
For Division Administrator

INDOT Design Exception Database Information
Des. No.:
Request Date:
Approved ☐ Rejected ☐
Commitment Made: Yes ☐ No ☐

cc: , Director, Highway Design ☐ Bridge ☐
file

LEVEL ONE DESIGN EXCEPTION REQUEST

August 16, 2019

MEMORANDUM

TO: John Wright
Director, Highway Design ☒ Bridge ☐

THRU: Anne Rearick
Director, Greenfield District Capital Program Management

THRU:
Project Reviewer

THRU: Brian Shattuck
Project Manager

FROM: Cody Beucler, P.E.
Designer

SUBJECT: Design Exception Request for Outside Shoulder Width
Des. No.: 1802075
Route No. or Road Name: I-465 EB to US 31 NB
PE Project No.: 1802075
Structure No.: N/A

Transmitted, herewith, is a Design Exception request for the above referenced project. The documentation has been reviewed for compliance with the Design Exception requirements included in *Indiana Design Manual* Section 40-8.0. Based on the analysis of the substandard Level One design features, we believe that the design exception is justified and we therefore recommend approval.

Concur: _____ Date
Director, Highway Design ☐
Director, Bridge ☐

FHWA oversight required: Yes ☐ No ☐

Approved: _____
Division Administrator Date

INDOT Design Exception Database Information
Des. No.:
Request Date:
Approved ☐ Rejected ☐
Commitment Made: Yes ☐ No ☐

cc: , Director, Highway Design ☐ Bridge ☐
file

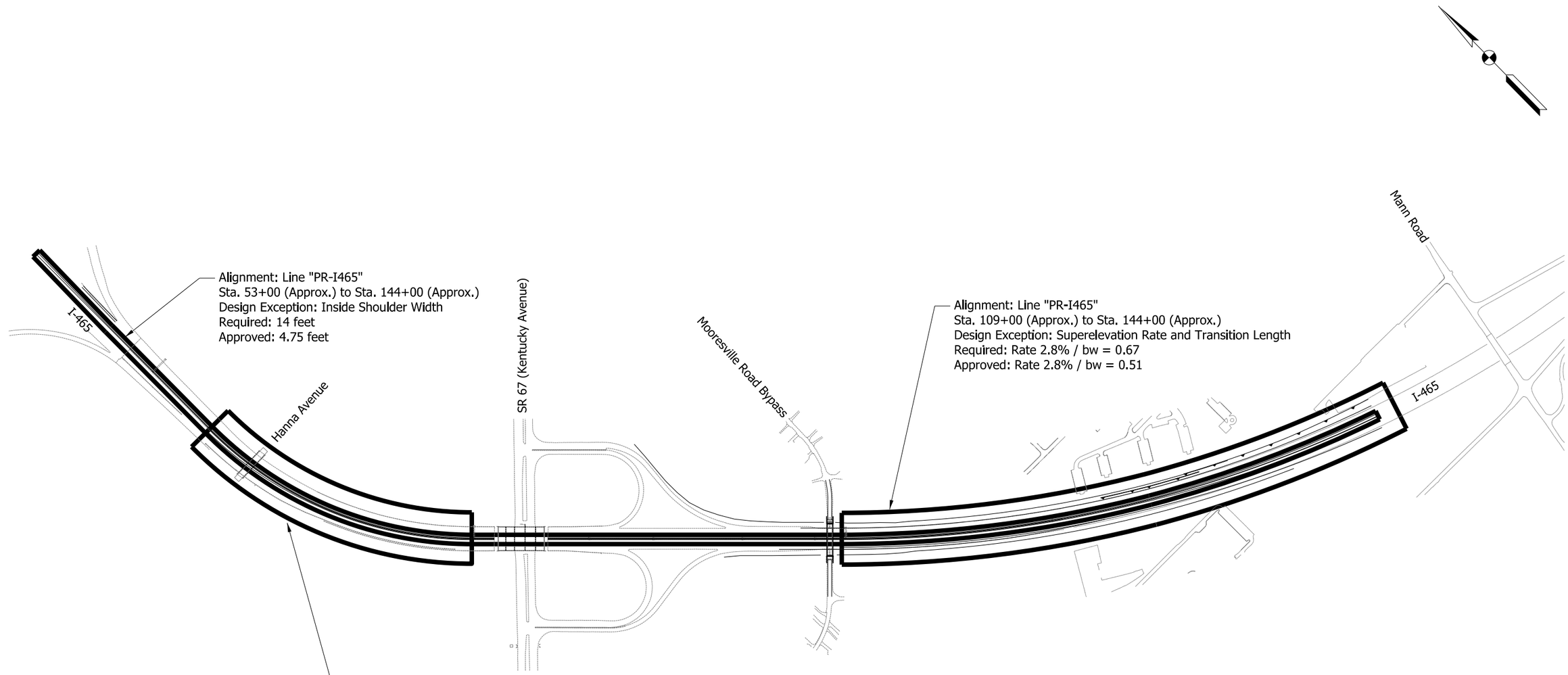

Alignment: Line "PR-I465"
Design Exception: Horizontal Stopping Sight Distance (EB Inside Shoulder and WB Outside Shoulder)
Sta. 68+00 (Approx.) to Sta. 87+00 (Approx.)
Required: 730 feet
Approved: 446 feet
Superelevation Rate and Transition Lengths
Required: Rate 7.6% / bw = 0.67
Approved: Rate 6.9% / bw = 0.60

PARSONS
101 W. Ohio St., Suite 2121
Indianapolis, IN 46204
Bus (317) 616-1000
Fax (317) 616-1033

RECOMMENDED FOR APPROVAL _____ DESIGN ENGINEER DATE

DESIGNED: JAC DRAWN: DH
CHECKED: CWB CHECKED: CWB

INDIANA
DEPARTMENT OF TRANSPORTATION

DESIGN EXCEPTION LIMITS EXHIBIT
SEGMENT A

HORIZONTAL SCALE	BRIDGE FILE
N/A	N/A
VERTICAL SCALE	DESIGNATION
N/A	1802107
SURVEY BOOK	SHEETS
N/A	of
CONTRACT	PROJECT
R-41536	1801695

IP_PWP:dms31266\I-465_Reconfigure_DESIGN_EXCEPTION_Structures Keymap C.dgn

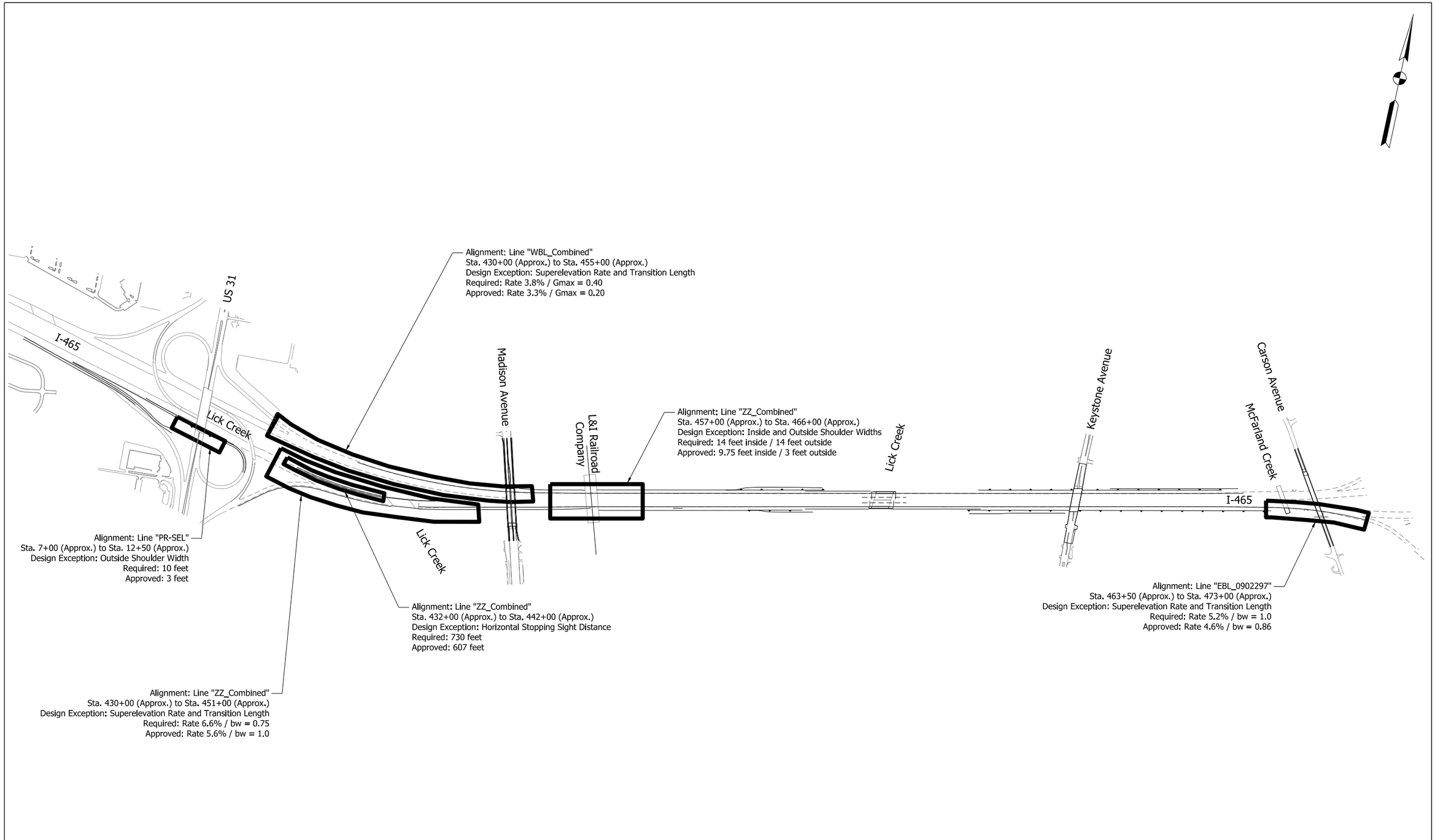

PARSONS
101 W. Ohio St., Suite 2121
Indianapolis, IN 46204
Bus (317) 616-1000
Fax (317) 616-1033

RECOMMENDED FOR APPROVAL _____ DESIGN ENGINEER DATE

DESIGNED: JAC DRAWN: DH
CHECKED: CWB CHECKED: CWB

INDIANA
DEPARTMENT OF TRANSPORTATION

DESIGN EXCEPTION LIMITS EXHIBIT
SEGMENT C

HORIZONTAL SCALE	BRIDGE FILE
N/A	N/A
VERTICAL SCALE	DESIGNATION
N/A	1802105
SURVEY BOOK	SHEETS
N/A	of
CONTRACT	PROJECT
R-41536	1801695

IP_PWP:dms31266\I-465_Reconfigure_DESIGN_EXCEPTION_Structure Keymap A&B.dgn

PARSONS

OKLEVEL ONE DESIGN EXCEPTION REQUEST

October 15, 2019

MEMORANDUM

TO: Elizabeth Phillips, PE
Director, Highway Design ☒ Bridge ☐

THRU: Anne Rearick, PE 11/19/19
Director, Greenfield District Capital Program Management

THRU: Mark Orton, PE 11/19/19
Project Reviewer

THRU: Ronald Heustis, PE 11/19/19
Project Manager

FROM: Timothy Haney, PE 11.19.19
Designer

SUBJECT: Design Exception Request for Horizontal Stopping Sight Distance & Minimum Shoulder Width
Des. No.: 1801695
Route No. or Road Name: Ramp "A-ZZ-NE", Ramp "ZZ-A-WS", Ramp "ZZ-A-NW"
PE Project No.: 1801695
Structure No.: N/A

Transmitted, herewith, is a Design Exception request for the above referenced project. The documentation has been reviewed for compliance with the Design Exception requirements included in *Indiana Design Manual* Section 40-8.0. Based on the analysis of the substandard Level One design features, we believe that the design exception is justified and we therefore recommend approval.

Concur: Acting Director Date 01/03/2020
Director, Highway Design ☐
Director, Bridge ☐

FHWA oversight required: Yes ☒ No ☐

Approved: Date 1/7/20 – As part of mitigation, high mast lighting is being provided (see following page). Deficient Right Shoulder Widths are from swapping wide right to wide left to improve HSSD.
For Division Administrator

INDOT Design Exception Database Information
Des. No.:
Request Date:
Approved ☐ Rejected ☐
Commitment Made: Yes ☐ No ☐

cc: , Director, Highway Design ☐ Bridge ☐ file

PARSONS

LEVEL ONE DESIGN EXCEPTION REQUEST

October 17, 2019

MEMORANDUM

TO: Elizabeth Phillips, PE
Director, Highway Design ☒ Bridge ☐

THRU: Anne Rearick, PE 11/19/19
Director, Greenfield District Capital Program Management

THRU: Mark Orton, PE 11/19/19
Project Reviewer

THRU: Ronald Heustis, PE RLH 11/19/19
Project Manager

FROM: Timothy Haney, PE DH 11.19.19
Designer

SUBJECT: Design Exception Request for Horizontal Stopping Sight Distance
Des. No.: 1801695
Route No. or Road Name: Line "ZZ-EBL", Line "ZZ-WBL", Ramp "US 31 WBEN"
PE Project No.: 1801695
Structure No.: N/A

Transmitted, herewith, is a Design Exception request for the above referenced project. The documentation has been reviewed for compliance with the Design Exception requirements included in *Indiana Design Manual* Section 40-8.0. Based on the analysis of the substandard Level One design features, we believe that the design exception is justified and we therefore recommend approval.

Concur: Acting Director Date 01/03/2020
Director, Highway Design ☐
Director, Bridge ☐

FHWA oversight required: Yes ☒ No ☐

Approved: For Division Administrator Date 1/7/20 - As part of mitigation, high mast lighting is being provided (see following page).

INDOT Design Exception Database Information
Des. No.:
Request Date:
Approved ☐ Rejected ☐
Commitment Made: Yes ☐ No ☐

cc: , Director, Highway Design ☐ Bridge ☐ file

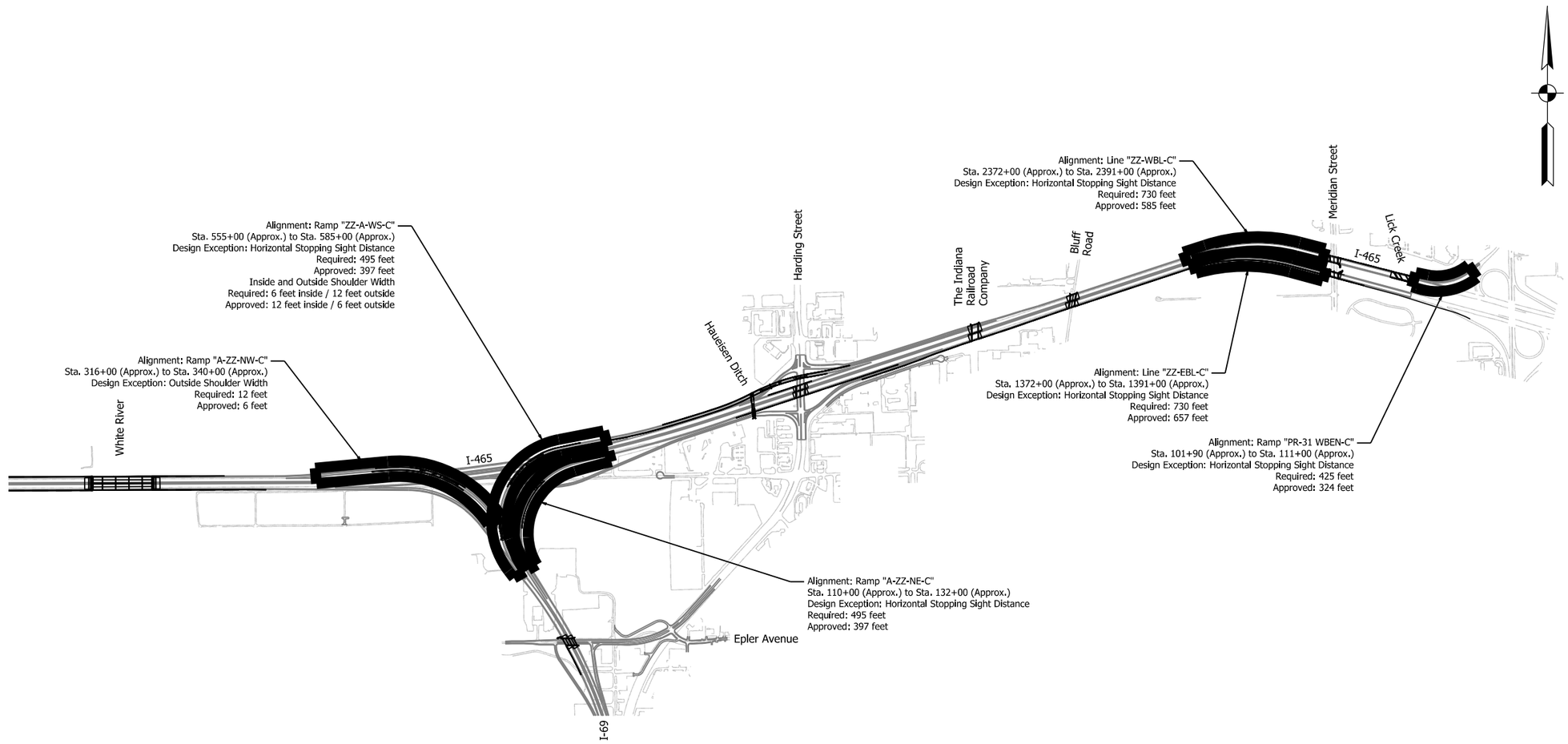

DRAFT
NOT FOR CONSTRUCTION

RECOMMENDED FOR APPROVAL _____ DESIGN ENGINEER _____ DATE

DESIGNED: SP DRAWN: DH
CHECKED: TJH CHECKED: TJH

INDIANA
DEPARTMENT OF TRANSPORTATION

DESIGN EXCEPTIONS LIMITS EXHIBIT
SEGMENTS B & D

HORIZONTAL SCALE	BRIDGE FILE
N/A	N/A
VERTICAL SCALE	DESIGNATION
N/A	1801695
SURVEY BOOK	SHEETS SK-01
ELECTRONIC	of
CONTRACT	PROJECT
R-41536	1801695

p0026746
3/4/2020 12:45:51 pm
model: Sheet1
file: c:\caddlib\pw\hntb_thaney\greatlakes\d0216198\1801695_design_exception-rd-s-il02.dgn

ATTACHMENT 9-1

UNIQUE SPECIAL PROVISIONS

PAVEMENT

A. Continuously Reinforced Concrete Pavement 2
B. CRCP Concrete Mix Criteria 6
C. Next Generation Concrete Surface 7
D. QC/QA PCCP Pavement 11
E. PCCP Joints 13
F. PCCP Joint Repair 14
G. PCCP Patching, Full Depth 29
H. PCCP Patching, Full Depth, Modified 32
I. Subgrade Treatment, Type ID 35

CONTINUOUSLY REINFORCED CONCRETE PAVEMENT

Description

This Work shall consist of constructing a continuously reinforced concrete pavement, CRCP, on a prepared subbase in accordance with 105.03.

Materials

Materials for concrete shall be in accordance with CRCP Concrete Mix Design Criteria USP. Coarse aggregate shall be of Class AP quality. Steel reinforcement shall be in accordance with 703.02 and shall be epoxy coated. The metal chairs, spacers, clips, wire, or other mechanical means used for fastening or holding reinforcement in place shall also be epoxy coated. Curing material shall be in accordance with 504.02.

Whitewashing shall be a Hydrated Lime slurry mixture consisting of hydrated lime and water. The mixture shall contain one part hydrated lime to four parts of total slurry by weight. The slurry shall be mixed to form a homogenous material for application during whitewashing the surface of HMA subbase. The Hydrated Lime shall be in accordance with 913.04. The water used in the slurry mixture shall be in accordance with 913.01.

Concrete Mix Design and Criteria

The mix design and criteria for pavement concrete shall be in accordance with CRCP Concrete Mix Design Criteria USP.

Trial Batch

The concrete for CRCP shall have a trial batch in accordance with 501.06 and meet the requirements of the CRCP Concrete Mix Design Criteria USP.

Lots and Sublots

Lots and sublots for CRCP shall be in accordance with 501.07.

Acceptance

Acceptance of CRCP shall be in accordance with 501.08.

Construction Requirements

Continuously reinforced concrete pavement shall be in accordance with 501.09 through 501.29 and the following.

(a) Placement of Reinforcement. The pavement reinforcement shall be placed such that the reinforcement in the completed pavement will be at the location shown on the plans with a placement tolerance for individual bars of inch horizontally and vertically.

Reinforcement bars shall be tied securely together. The minimum length of longitudinal bars shall be 30 ft, except as required to establish the lap arrangement selected.

During the placement of Portland cement concrete, IFA will check the depth and lateral placement of the pavement reinforcement at such times and places as IFA may elect.

Pavement reinforcement shall be supported on steel chair supports at the depth below the pavement surface as shown on the plans. The Design-Build Contractor shall submit working drawings showing details of the chair supports and their spacing to IFA and obtain IFA's approval before any

fabrication is begun.

The chair supports shall possess the necessary rigidity and be spaced at intervals close enough to hold the reinforcement at the proper depth and position. However, the spacing of the chair supports shall not exceed 3 ft transversely or 4 ft longitudinally. The chair supports shall be fabricated with sand plates unless the steel chair supports are fabricated using the transverse bar and have two continuous subbase bearing members attached to the upright supports. Wire size for the bearing member shall be W7 or larger.

Pavement reinforcement bars shall be assembled by fastening the longitudinal bars to the transverse bars, without welding, using wire, clips, or other acceptable methods meeting the approval of IFA. The size and spacing of the bars shall be as shown on the plans.

(b) Whitewashing shall be applied to the surface of the HMA subbase prior to placing CRCP. The homogenous slurry will be sprayed, under pressure, uniformly over the HMA subbase surface. The slurry shall be agitated to keep all materials in uniform suspension throughout the mixing and distribution cycles. Whitewashing shall be applied and sufficiently cured prior to placing and securing the steel reinforcement. Concrete paving shall not be allowed to take place when the whitewashed HMA subbase surface temperature is greater than 110^0F.

If the applied whitewashing becomes discolored or removed as a result of installing the reinforcing steel, the slurry shall be reapplied to insure a uniform and complete whitewashing coverage of the HMA separation layer. The whitewash shall not be applied to the steel reinforcement.

(c) Joints and Terminal Joints. The longitudinal and transverse joints and Terminal Joints shall be constructed in accordance with 503 and as shown on the plans with the following exceptions:

(1) Longitudinal Sawed Joints. The tie bars in longitudinal sawed joints shall be positioned on the prepared subbase prior to concrete placement and shall either be supported on approved assemblies or securely tied to the underside of the longitudinal bars of the pavement reinforcement.

(2) Transverse Construction Joints. Transverse construction joints shall be made at the end of each day or when an interruption in the concreting operation of 30 minutes or more occurs, provided the length of pavement laid from the last joint is 12 ft or more and the distance from the construction joint to the nearest bar-lap is at least 3 1/2 ft.

The transverse construction joint shall be formed by means of a suitable split header board conforming to the cross section of the pavement, accurately set and securely held in place in a plane perpendicular to the surface of the pavement. The pavement reinforcement bars shall extend continuously through the split in the header board and shall be supported beyond the joint by steel chair supports. The header board shall be kept clean without oil. Excess mortar material accumulated at the front of the paver shall be wasted and not incorporated into the pavement at the joint.

Before paving operations are resumed, the header board shall be removed, any concrete or mortar that may have leaked through the holes or split in the header shall be chipped from the face of the joint and removed, all surplus concrete on the subbase shall be cleared away, and any irregularities in the subbase shall be corrected. The fresh concrete shall be deposited directly against the old and shall be consolidated with a hand vibrator inserted into the concrete and worked along the entire length of the joint. Transverse construction joints shall not be edged or sealed. The pavement areas adjacent to both sides of a transverse construction joint shall receive additional consolidation from hand vibrators inserted into the concrete and the surface shall be refinished. These areas shall extend at least 10 ft from the joint.

(3) Transverse Terminal Joint. When specified, transverse terminal joints shall be constructed at the ends of a construction section according to the details shown on the plans. The concrete shall be Class A. The coarse aggregate in the Class A concrete shall be of Class AP quality. The pad shall be constructed to the same slope and cross section as the pavement and the entire top surface shall be given a smooth finish with a steel trowel. The concrete pad shall be completed and cured in accordance with 504.04, before the pavement and remainder of the transverse terminal joint is constructed. A liquid membrane forming compound shall be used.

(d) Pavement thickness shall be determined in accordance with 501.26, except the random cores shall be located such that none of the longitudinal or transverse steel reinforcement is cut.

Method of Measurement

CRCP will be quantified by the square yard of the thickness specified. The area of CRCP will be the planned width of the pavement multiplied by the length of the pavement or as directed in writing. The width of the pavement will be as shown on the typical cross section of the plans. The length of the pavement will be measured parallel to the surface of the pavement along the centerline of the roadway or ramp, excluding paving exceptions as shown on the plans.

The steel reinforcement, the metal chairs, spacers, clips, wire, or other mechanical means used for fastening or holding reinforcement in place within the CRCP will not be quantified.

Hydrated lime slurry for whitewashing will not be quantified.

The transverse terminal joint will not be quantified.

Basis of Item

The accepted quantities of CRCP will be included in QC/QA-Continuous Reinforced Concrete Pavement, 11 In., per square yard for the thickness specified, completed in place. Steel reinforcement, the metal chairs, spacers, clips, wire, or other mechanical means used for fastening or holding reinforcement in place in the CRCP shall be included in the QC/QA-Continuous Reinforced Concrete Pavement, 11 In.

Transverse terminal joints shall be included in the cost of the QC/QA-Continuous Reinforced Concrete Pavement, 11 in.

Furnishing, calibrating and operating the inertial profiler, and furnishing profile information will be in accordance with 501.31.

Adjustments to the contract payment with respect to flexural strength, thickness, air content, range and smoothness will be included in a quality assurance adjustment pay item in accordance with 109.05.1

CRCP thickness determination will be made in accordance with 501.31.

The item list will include:

Item No.	Item Description	Unit Symbol
501-XXXXX	QC/QA-Continuous Reinforced Concrete Pavement, 11 IN	SYS
501-06727	Coring, PCCP	LS
501-12171	Inertial Profiler, PCCP	LS

The following shall be considered incidental to this item:

Trial batch demonstrations shall be included in the cost of QC/QA-Continuous Reinforced Concrete Pavement, 11 In.

Material, transportation, placement, and all incidentals necessary for whitewashing.

Profilograph, PCCP, will be fully considered regardless of how often the profilograph is used of how many profilograms are produced.

Corrections for pavement smoothness and re-texturing.

Coring and refilling of the pavement holes for appeals.

Traffic control for appeals shall be supplied.

Removal and replacement of QC/QA-Continuous Reinforced Concrete Pavement, 11 In., damaged by freezing.

CRCP Concrete Mix Criteria

The CMD shall contain at least one, but no more than two supplementary cementitious materials, SCM. The CMD shall produce workable concrete mixtures, with the minimum amount of water, and having the following properties:

Minimum total cementitious content.....500 lbs/cu yd
Minimum portland cement content.....350 lbs/cu yd
Allowable amount of single SCM, % of total cementitious, by weight
.....20% to 40%*
Allowable amount of two SCM, % of total cementitious, by weight
.....25% to 40%**
Allowable amount of silica fume, % of total cementitious, by weight
.....3% to 7%***
Maximum water/cementitious ratio.....0.42
Maximum Slump.....8 in.
Air.....5.8% to 9.2%
Minimum flexural strength, third point loading....570 psi at 7 days
Relative yield.....0.98 to 1.02

* For a binary system that contains fly ash or GGBFS combined with cement

**For ternary mixes, the amount of fly ash or GGBFS in the binder system shall not be less than 15% of the total cementitious defined by the CMDP.

***Silica fume shall only be a SCM component of a ternary binder system.

The coarse aggregate shall be of class AP quality and consist of dolomite aggregates that meet the requirements of 904.01 and ITM 205. A list of approved dolomite aggregate sources is available on INDOT's website. The CMD shall include a combined aggregate gradation that is within the limits of the following table. Proportions will be based upon saturated surface dry (SSD) aggregates.

Combined Aggregate Gradation (Percent Retained) [(a)(b)]		
Sieve Size	Lower Limit	Upper Limit
1 in. (25 mm)	0	0
¾ in. (19 mm)	0	20
½ in. (12.5 mm)	4	20
3/8 in. (9.5 mm)	4	20
No. 4 (4.75 mm)	4	20
No. 8 (2.36 mm)	0	12
No. 16 (1.18 mm)	0	12
No. 30 (600 µm)	4	20
No. 50 (300 µm)	4	20
No. 100 (150 µm)	0	10
No. 200 (75 µm)	0	2

(a) The total volume of coarse sand (#8-#30) shall be ≥ 20%
(b) The total volume of fine sand (#30-#200) shall be ≥ 25% and ≤ 40%

Absorption tests shall be performed on the fine aggregate in accordance with AASHTO T 84 and on the coarse aggregate in accordance with AASHTO T 85. Absorption test results for a particular size of aggregate that differ by more

than 1.0 percentage point from IFA's source value shall be investigated. The Design-Build Contractor shall report any differences that exceed 1.0% to IFA. The Design-Build Contractor's results shall be used when calculating the water/cementitious ratio.

If type IP, type IP-A, type IS or type IS-A cements are to be used, the portland cement content shall be increased to a minimum of 500 lbs/cu yd. The additional use of SCM, other than silica fume, will not be allowed when blended cement types IP, IP-A, IS, or IS-A are used.

Chemical admixtures type A, type B, type C, type D, type E, type F, and, type G may be allowed with prior written approval. Admixture type C shall not be used in conjunction with type 3 cement. Calcium chloride shall not be used.

CRCP Trial Batch

A trail batch shall be conducted in accordance with 501.06, except the concrete shall meet the following requirements:

a) Air content shall be 5.8% to 9.2%.
b) The plastic unit weight shall be within ± 3.0% from the target plastic unit weight of the CMDS.
c) The water/cementitious ratio shall be within ± 0.015 of the target value of the CMDS and shall not exceed 0.425

NEXT GENERATION CONCRETE SURFACE

Description

This Work shall consist of construction of the Next Generation Concrete Surface, NGCS, on newly constructed continuously reinforced concrete pavements and portland cement concrete pavements, PCCP, using diamond grinding and grooving techniques in accordance with 105.03.

Equipment Requirements

The grinding shall be completed by mechanical grinding equipment in accordance with 508.08(c) and the equipment shall weigh a minimum of 35,000 lbs including the grinding head and be of a size that will grind a strip at least 4 ft wide in a single pass. Grinding equipment that causes raveling, aggregate fractures, spalls, or disturbance to the transverse or longitudinal joints shall not be permitted. The equipment shall have a positive means of vacuuming the grinding residue from the pavement surface leaving the surface in a clean, near-dry condition.

The equipment shall be maintained to ensure it is in proper working order, with attention paid to the roundness of the match and depth control wheels. Any wheels found to be out of round shall be replaced immediately.

Construction Requirements

The construction operation shall be scheduled and proceed in a manner that produces a neat, uniform finished surface. Shoulder, auxiliary or ramp lane grinding shall transition from the edge of the mainline as required to provide drainage, leaving no more than a 3/16 in. ridge and an acceptable riding surface. When conditions require a feather pass into the shoulder, auxiliary or ramp lanes, conventional diamond grinding shall be used. Joint sealing shall be completed subsequent to the diamond grinding operations and shall be installed in a recessed condition.

NGCS construction shall be accomplished using a two-pass operation as described herein.

The Design-Build Contractor shall construct a single lane NGCS test grind 500 ft in length to demonstrate that the equipment and procedures used are capable of attaining the desired surface texture and smoothness requirements. The Design-Build Contractor shall not proceed beyond the test grind limits until the test grind has been approved in writing by IFA.

Grinding shall be accomplished in a manner that eliminates joint or crack faults so there is no more than a 1/16 in. differential between the adjacent sides of the joints and cracks. Grinding shall also substantially remove pavement conditions such as warp and curl to provide an acceptable ride in accordance with the smoothness requirements described herein.

Lateral drainage shall be achieved by maintaining a constant cross slope between grinding extremities in each lane. The finished cross slope shall mirror the pre-grind cross slope and shall have no variations of slope greater than 1/8 in. when measured with a 10 ft straightedge placed perpendicular to the centerline. Smoothness requirements will not apply to areas outside the ground area.

Grinding shall begin and end at lines normal to the pavement centerline at the project limits. Passes of the grinding head shall not overlap more than

1 inch. No unground surface area between passes will be permitted.

This work shall be constructed in two separate operations. The first operation will create the flush ground surface. The flush grind blades shall be mounted on a 4 ft grinding head, stacked with 1/8 in. wide blades separated by 0.035 +/-0.005 inch wide spacers. The blades used to produce the flush ground surface shall be flat across their contact surface and in the same plane with other flush grind blades when mounted. The complete head, when stacked with all blades, shall be straight across its length without bowing when mounted on the diamond grinding machine. No unground surface area between passes will be allowed. The surface shall meet the smoothness requirements described herein.

The second operation will provide the longitudinal grooves. The longitudinal grooves shall be 1/8 in. wide and will be 1/8 in. to 3/16 in. in depth. The longitudinal grooves shall be spaced on 1/2 in. to 5/8 in. centers. The grooves shall be constructed parallel to the centerline. The Design-Build Contractor shall use a guide to ensure proper alignment of the grooves to centerline.

Final Surface Finish

The NGCS grinding process shall produce a pavement surface that is true to grade and uniform in appearance with a longitudinal grooved texture. The flush ground surface shall appear smooth and shall contain no ridges that exceed 1/32 in. The longitudinal grooves shall be constructed parallel to the centerline. All of the pavement surfaces specified shall be textured utilizing the NGCS unless approved by IFA.

Slurry Handling and Removal

The operation shall be coordinated such that the slurry or residue materials are continuously removed from the pavement. The slurry shall not encroach into adjacent pavement lanes carrying traffic, or flow into gutters or other drainage facilities and shall be immediately and directly deposited into a tanker truck and removed from the jobsite. Final disposal of the material shall be in an approved manner and in accordance with 104.07.

Smoothness Requirements

Each segment of the finished NGCS shall be in accordance with 501.25. The requirements of 501.28(d) shall not apply. Surfaces shall be measured for smoothness acceptance following the flush grinding operation and prior to the longitudinal grooving operation.

The finished ground surface shall not include any bumps exceeding 0.3 in.

Method of Measurement

NGCS construction will not be quantified.

Basis of Item

NGCS construction shall be included in the quantity of the PCCP and CRCP.

QC/QA, PCCP PAVEMENT

SECTION 501.03, LINE 31 INSERT THE FOLLOWING:

Portland Cement……901.01(b)**

SECTION 501.03, AFTER LINE 32 INSERT THE FOLLOWING:

Silica fume……901.04

SECTION 501.03, AFTER LINE 34 INSERT THE FOLLOWING:

*** Type IS-A and Type IP-A blended cements are not allowed.*

SECTION 501.04(a), LINE 48, DELETE AND INSERT AS FOLLOWS:

(g) the specific gravity of ~~pozzolan~~ *each supplementary cementitious material (SCM)*

SECTION 501.04(a), LINE 69, DELETE AND INSERT AS FOLLOWS:

2. ~~pozzolan~~ *SCM* source or type

SECTION 501.04(b), LINES 96 & 97, DELETE AS FOLLOWS:

~~6. increase in cement content from the amount designated in the original CMDP.~~

SECTION 501.05, LINES 118-126 DELETE AND INDERT AS FOLLOWS:

The CMD shall *contain at least one, but no more than two SCM's, and* produce workable concrete mixtures having the following properties:

Minimum ~~portland~~ *total* ~~cement~~ cementitious content *defined by CMDP*……....~~400~~ *500* lbs/cu yd

*Allowable amount of single SCM defined by CMDP, % of total cementitious, by weight...20.0 - 40.0%**

*Allowable amount of two SCM's defined by CMDP, % of total cementitious, by weight.....25.0 – 40.0%***

Minimum portland cement content defined by CMDP……350 lbs/cu yd

*Allowable amount of silica fume SCM defined by CMDP, % of total cementitious content….3.0 – 7.0%***

Maximum *allowable* water/cementitious ratio of concrete mixture *with fly ash SCM* …..~~0.450~~ *0.440*

Maximum allowable water cementitious ratio of concrete mixture with ggbfs SCM……0.450

~~Minimum portland cement/fly ash ratio.....3.2 by weight~~

~~Minimum portland cement/GGBFS ratio .....2.3 by weight~~

Target air content *defined by CMDP*.....~~6.5~~ *7.0*%

Minimum flexural strength, third point loading.....570 psi at 7 days

**For binary binder system that contains fly ash or ggbfs combined with cement. If blended cement is used it shall be either a Type IP(25≤X≤40) or Type IS(25≤X≤40) or Type IL. Blended cements, except for Type IL, shall not be used in combination with plant added ggbfs or fly ash to create a binary binder system. When using a Type IL blended cement, plant addition of fly ash or ggbfs is allowed. The limestone dust in Type IL cement will not be considered in calculating the amount of SCM.*

***For ternary binder system ~~mixes, the amount of fly ash or ggbfs in the binder system shall not be less than 15.0% of the total cementitious defined by the CMDP~~. that contain two SCM's combined with a cement. For example: fly ash and ggbfs, or fly ash and silica fume, or ggbfs and silica fume. A blended cement shall not be combined with a plant added SCM of the same type of pozzolan to create a ternary system. For example: a Type IP cannot be combined with a plant added fly ash and ggbfs. When using a Type IL blended cement, plant addition of both fly ash and ggbfs is allowed. The limestone dust in Type IL cement will not be considered in calculating the amount of SCM. Silica fume may only be a SCM component of a ternary binder system. If a blended cement is used, silica fume may be a component of the ternary system.*

SECTION 501.05, LINES 147 TO 152, DELETE AND INSERT THE FOLLOWING:

~~Fly ash or GGBFS used as an additive, or blended cements may only be incorporated in the concrete mix between April 1 and October 15 of the same calendar year. If type IP, type IP-A, type IS or type IS-A cements are to be used, the minimum portland cement content shall be increased to 500 lbs/cu yd. The use of fly ash or GGBFS as an additive will not be allowed when blended cement types IP, IP-A, IS, or IS-A are used.~~

Hand placed paving operations meeting the requirements of 508.04(c) and occurring prior to April 1 or after October 15, of the same calendar year, shall utilize concrete having a ternary binder system that contains silica fume as one of the SCM's. Concrete with a ternary binder system containing silica fume as one of the SCM's, may be used in any approved method of pavement placement without calendar restriction. Placement operations that involve form riding equipment

in accordance with 508.04(b), may utilize any approved binary CMDP, without calendar date restrictions, with written approval by IFA.

SECTION 501.06, LINES 159 - 171, DELETE AND INSERT THE FOLLOWING:

A trial batch shall be produced and tested by the Contractor's certified technician160 to verify that the CMDS meets the concrete mix criteria. Concrete produced at a plant shall be batched within the proportioning tolerances of 508.02(b). Concrete batched in a laboratory shall be in accordance with ASTM C 192. The Engineer will test the trial batch and provide the Contractor with the results. The trial batch shall be of sufficient quantity to allow the Contractor and the Engineer to perform all required tests from the same batch. Trial batch concrete shall not be used for more than one test, except the concrete used for the unit weight may be used to conduct the air content test. The air content shall be ~~5.0~~ *5.5*% to 10.0%. The plastic unit weight shall be within ± 3.0% from the target plastic unit weight of the CMDS. The water/cementitious ratio shall be within ± ~~0.030~~ *0.015* of the target value of the CMDS and shall not exceed ~~0.450~~ *the maximum amount allowed for the appropriate mix in accordance with 501.05*. The flexural strength shall be determined by averaging a minimum of two beam breaks and shall be a minimum of 570 psi.

SECTION 501.06, LINES 177 - 183, DELETE AS FOLLOWS:

~~A trial batch is not required for a CMDS that has any of the following criteria:~~

~~(a) minimum cement content of 564 lbs/cu yd and a~~

~~target water/cementitious ratio of 0.420~~

~~(b) class C concrete in accordance with 702 using Class AP coarse aggregate.~~

SECTION 501.15, LINES 290-291, DELETE AND INSERT THE FOLLOWING:

when the ambient temperature is 35°F and above~~, unless procedures outlined in the QCP for lower temperatures are followed~~. *If the local forecast predicts an average minimum temperature below 40 °F for 10 consecutive days, the QCP shall provide details prior to the cold weather to address changes in materials, concrete batching and mixing processes, construction methods, curing, and protection of the in situ concrete to insure that the necessary quality characteristics will not be compromised as a result of the cold weather.* Prior to attaining opening to traffic strengths

SECTION 501.23(a). LINES 356-357, DELETE AND INSERT THE FOLLOWING:

Construction vehicles or equipment will be allowed on the PCCP ~~after 10 days or~~ when flexural tests indicate a modulus of rupture of 550 psi or greater. ITM 402 may

SECTION 501.23(b), LINES 364-367, DELETE AND INSERT THE FOLLOWING:

The PCCP may be opened to traffic ~~after 14 days. The PCCP may be opened earlier if the test beams of ITM 402~~ *when flexural tests* indicate a modulus of rupture of 550 psi or greater. *ITM 402 may be used as an alternate method to determine the flexural strength.* If adequate strengths are not met within 14 days achieved, an investigation by IFA and Design-Build Contractor will be conducted to determine if the PCCP is deficient. Resolutions for all

SECTION 501.27(b), LINE 515, DELETE AND INSERT THE FOLLOWING:

0.030 of the target value or exceed ~~0.450~~ *the maximum allowed for the appropriate mixture in accordance with 501.05*. A stop paving order will be issued if the test

SECTION 501.27(d), LINES 530 - 531, DELETE AND INSSERT THE FOLLOWING:

The average lot air content values shall not vary more than - ~~0.8~~ *1.2*% to + ~~2.4~~ *2.2*% from the ~~6.5~~ 7.0% target air content. The range of sublot air content values shall not exceed

SECTION 501.28(b)1., LINE 588, DELETE AND INSERT THE FOLLOWING:

LOT AVERAGE AIR CONTENT	
Percent, %	Pay Factors
> 9.8	*
9.7 – 9.8	~~0.80~~ *0.85*
9.5 – 9.6	~~0.90~~ *0.95*
9.3 – 9.4	~~0.95~~ *0.99*
~~9.0~~ *5.8* – 9.2	~~0.99~~ *1.00*
5.7 ~~– 8.9~~	~~1.00~~ *0.93*
5.6	~~0.93~~ *0.90*
5.5	~~0.90~~ *0.85*
5.4	~~0.85~~ *0.79*
~~5.3~~	~~0.79~~
< ~~5.3~~ *5.4*	*
* The PCCP will be adjudicated as a failed material in accordance with normal Department practice as listed in 105.03. The PCCP may be subject to removal and replacement or left in place with reduced or no payment.	

LOT RANGE FOR AIR CONTENT	
Percent, %	Pay Factors
0.0 – 2.5	1.00
2.6 – 3.0	0.99

3.1 – 3.5	0.97
> 3.5	*
* The PCCP will be adjudicated as a failed material in accordance with normal Department practice as listed in 105.03. The PCCP may be subject to removal and replacement or left in place with reduced or no payment.	

SECTION 501.28(b)2., LINE 592, DELETE AND INSERT THE FOLLOWING:

If a sublot value is less than ~~5.0~~ *5.5*% or greater than 10.0%, the PCCP will be

PCCP JOINTS

The Standard Specifications are revised as follows:

SECTION 503, DELETE LINE 16, INSERT AS FOLLOWS:

Hot Pour Joint Material…….906.02(a)2.

SECTION 503, BEGIN LINE 49, DELETE AND INSERT AS FOLLOWS:

~~Sawed contraction joints shall be cut in two operations.~~ The ~~initial~~ saw cut shall

SECTION 503, BEGIN LINE 59, DELETE AND INSERT AS FOLLOWS:

The ~~second~~ saw cut shall be made after the concrete has sufficiently cured, but before opening the pavement to non-construction traffic. *The width of the saw cut shall be measured for specification compliance at the time of the sawing operations.* Slurry or saw residue

SECTION 503, BEGIN LINE 77, DELETE AND INSERT AS FOLLOWS:

uses the PCCP prior to sealing. ~~Joint Sealing shall be in accordance with 503.05.~~ *The sawed joint shall be cleaned as specified in 503.05(a).*

SECTION 503, BEGIN LINE 210, DELETE AS FOLLOWS:

~~When preformed elastomeric joint seals are used, the material shall be installed in one continuous piece by means of an approved machine. The seal shall not be stretched more than 5% while being placed and show no twisting, rollover, folding, cutting, or excess lubricant-adhesive on the top of the seal. Elastomeric joint seal may be installed in two separate pieces for phased construction with the splice point occurring at the highest point of the joint. The splicing method used shall be in accordance with the seal manufacturer's recommendations.~~

PCCP JOINT REPAIR

SECTION 507, BEGIN LINE 4, DELETE AND INSERT AS FOLLOWS:

~~This work shall consist of cleaning and sealing of joints and cracks, patching, profiling, underseal, and retrofit load transfer in accordance with 105.03.~~

This repair work shall consist of partial depth patching and bottom-half patching at PCCP joints, cleaning and sealing of joints and cracks beyond areas of PCCP joint repair, profiling, underseal, and retrofit load transfer in accordance with 105.03.

SECTION 507, BEGIN LINE 12, DELETE AND INSERT AS FOLLOWS:

Admixtures .....*912.03* [A]
Asphalt Binder, PG 64-22 .....902.01(a)
Chemical Anchor System *901.05*
Coarse Aggregate, Class A, Size #12 [B] *904*
Curing Materials.....*912.01*
Dowel Bars…….. .....910.01(b)10
Epoxy Coated Reinforcing Bars .....*910.01(b)9*
Fine Aggregate, Size No. 23 ~~or 24~~.....904
Joint Filler *906.01*
Joint ~~Sealing Materials~~ *Sealant, Hot Pour*.....906.02*(a)2.*
Latex Modified *912.04*
Portland Cement .....*901.01(b)* [C]
Pre-packaged Concrete Patch Material .....*3U18* [D]
Pre-packaged Rapid Setting Patch Material~~s~~ .....901.07 [E]
Rapid Hardening Hydraulic Cement.....*ASTM C1600* [F]
Water.....*913.01*

[A] *- Organic Retarders such as citric acid may be used in concretes containing rapid hardening hydraulic cement.*
[B] *- Crushed stone only.*
[C] *- Cement shall be pre-packaged unless otherwise approved by IFA.*
[D] *- A dry, pre-bagged concrete patching mix may be used as an alternate to the OPCC specified in the Section entitled Concrete Mix Design and Mix Criteria. The pre-bagged concrete shall be MnDOT Grade 3U18 CONCRETE PATCH.*
[E] *- The Rapid Set Patch, RSP, material shall be selected from the Department's approved list entitled Rapid Setting Patch Materials. The RSP material shall be extended with a coarse aggregate that is approved by the manufacturer and the Concrete Engineer.*
[F] *- Rapid hardening cement shall be a calcium sulfoaluminate, CSA, meeting the requirements of ASTM C 1600 for the type, as stated in Section 4. The type will also be identified in the CMDS. A Type B Certification in accordance with 916 shall be submitted for the CSA cement to the Department's Concrete Engineer.*

Dowel bars and dowel bar assemblies shall be in accordance with 503.04.

Concrete Mix Design

A concrete mix design, CMD, for the partial depth patching and bottom-half patching shall be identified as being one of the following types and shall be in accordance with the section entitled Concrete Mix Criteria.

1) *Prepackaged Concrete Patch Material, MnDOT 3U18 (3U18)*
2) *Ordinary Portland cement based concrete (OPCC)*
3) *Rapid hardening cement based concrete (RHCC)*
4) *Latex Modified Concrete (LMC)*
5) *Very Early Strength Latex Modified Concrete (VESLMC)*
6) *Prepackaged Rapid Set Patching concrete (RSP)*

A concrete mix design submittal, CMDS, for OPCC, RHCC, LMC and VESLMC shall be submitted in accordance with 506.03, except that the trial batch shall be in accordance with this special provision. Prepackaged patching concretes 3U18 and RSP are not required to follow the submittal format of a CMDS; however, IFA shall be notified as to their use. The CMDS or notification of using 3U18 or RSP shall be submitted a minimum of seven calendar days prior to the trial batch.

Concrete Mix Criteria

The fine aggregate for OPCC, RHCC, LMC or VESLMC shall be at least 48% but not more than 52% of the total volume of the aggregate in each unit volume of concrete. Proportions will be based on aggregates in the bulk SSD condition.

The blend of coarse and fine aggregate for OPCC, RHCC, LMC or VESLMC shall be such that the gradation of the combined materials shall meet the requirements stated in the table below. Aggregate volumes within the patching concrete will be determined based on the Bulk SSD properties for each aggregate:

Combined Gradation of Coarse and Fine Aggregates	
Sieve Size	*Percent Passing*
3/8”	*98-100*
No. 4	*77 – 93*
No. 8	*40 – 80*
No. 16	*25 – 50*
No. 30	*15-35*
No. 50	*0 – 18*
No. 100	*0 – 8*
No. 200	*0-2.3*

The concrete patch material 3U18 or OPCC shall produce workable mixtures, with the minimum amount of water, having the following properties:

Portland cement content for OPCC.....846 lbs/cu yd (94 lb sack/3 ft³)

Target water/cementitious ratio.....[A]
Maximum Slump.....1 in. [A]
Air Content for OPCC and 3U18 .....7.0% ± 1.5% [B]
Minimum flexural strength, third point loading .....500 psi at 7 days [C]
Minimum Compressive Strength.....3200 psi at 7 days [D]
Maximum Shrinkage in air.....0.060% at 28 days [D]

[A] - Measured five minutes after discharge from the mixer. The target water cement ratio shall be established at the time of the trial batch and is to be based on the slump requirement for a patching mix.

[B] - The air content for OPCC and 3U18 patching concrete placed after October 24th shall be within a range of 6.0% to 8.5%.

[C] - Concrete beams and cylinders cast for the purpose of evaluating the mix criteria shall be cured in accordance with AASHTO T 23 Section 10.1, Standard Cure conditions. The age associated with the strength represents 3U18 or OPCC without chemical admixtures.

[D] - The maximum allowable shrinkage will only apply for the concrete if the Design-Build Contractor requests to omit tooling as part of re-establishing the longitudinal joint prior to sawing. Testing shall be in accordance with ASTM C 157 and conducted on specimens cast using the same materials stated in the CMDS. Approval will be based on a Type A certification in accordance with 916, which shall be submitted to IFA's Concrete Engineer.

When anticipated time for opening to construction equipment or general traffic is less than seven calendar days, and the ambient temperatures are anticipated to remain at or above 60°F during the cure time, the OPCC shall utilize a chemical admixture as outlined in the table below.

Chemical Admixture Usage in OPCC	
Anticipated Opening to Traffic For CMDP	*Required Chemical Admixture*
≥ 7 calendar days	*Not Required*
72 hr to 7 calendar days	*Type A*
36 hr to < 72 hr	*Type A*
12 hr to < 36 hr	*Type A, C* or E**

**Accelerating admixtures are not allowed when the ambient air temperature exceeds 80 °F unless approved in writing by IFA. The use of Type C or E chemical admixtures to facilitate early strength of pavement repairs, solely for the purpose of allowing construction traffic, shall not occur unless approved by IFA.*

RHCC, LMC or VESLMC shall be proportioned to meet the following requirements:

Portland cement content for LMC .....658 lbs/cu yd, minimum
Rapid hardening cement content for RHCC or VESLMC .....658 lbs/cu yd, minimum
Maximum allowable water/cementitious ratio for RHCC.....0.450 [A]
Slump.....3 – 7 in. [B]
Unit Weight .....Information Only

Air Content for RHCC.....6.5% ± 1.5% [C]
Air Content for LMC and VESLMC.....0.0% - 6.0%
Minimum flexural strength, third point loading.....500 psi [D]
Minimum Compressive Strength .....3200 psi [D]
Maximum Shrinkage in air.....0.060% at 28 days [E]

[A] - During production of RHCC, the water cement ratio shall be maintained within ± 0.020 of the target stated established by the CMDP, not to exceed 0.450.
[B] - Measured four to five minutes after discharge from the mixer.
[C] - If the RHCC has a permeability of 900 coulombs or less at 56 days, the acceptable range of air content is allowed to be the same as LMC and VESLMC. Verification of this property will be determined from testing of specimens cast at the trial batch. Testing will be done per AASHTO T 277, with the value determined by averaging the result of two specimens.
[D] - Concrete beams and cylinders cast for the purpose of evaluating the mix criteria shall be cured in accordance with AASHTO T 23 Section 10.1, Standard Cure conditions. RHCC and VESLMC shall achieve the required strength in 12 hours or less. LMC shall achieve the required strength in 24 hours or less. RHCC, LMC and VESLMC shall provide opening to traffic within the requirements for maintenance of traffic and lane closure restrictions.
[E] - The maximum allowable shrinkage will only apply if the Design-Build Contractor requests to omit tooling the longitudinal prior to sawing, whenever the concrete mixture is to be used. Testing shall be in accordance with ASTM C 157 and conducted on specimens cast from concrete at the trial batch. Approval will be based on a Type A certification in accordance with 916, which shall be submitted to IFA's Concrete Engineer.

Pre-packaged RSP material shall be extended with a coarse aggregate as recommended by the manufacturer. Water shall be added in an amount not to exceed the amount recommended by the manufacturer. The material shall meet the same requirements for slump, strength and shrinkage as stated previously for RHCC.

Trial Batch

A trial batch shall be produced and tested to verify that the patching concrete is in accordance with the appropriate concrete mix criteria for 3U18, OPCC, RHCC, LMC, VESLMC or RSP material. An American Concrete Institute certified concrete field testing technician, grade 1 shall be on site to direct all sampling and testing. The trial batch shall be conducted prior to production. The equipment used for mixing the concrete at the trial batch shall be the same as what is identified in the QCP. IFA will test the concrete for the appropriate plastic and hardened concrete properties. The flexural strength and compressive strength will be determined by averaging a minimum of two tested specimens for each age. The beams and cylinders shall be cured in accordance with AASHTO T 23 Section 10.1, Standard Cure conditions. Compressive and flexural strengths will be measured at ages of three hours, six hours, 12 and 24 hours in order to determine the rate of strength gain for RHCC, LMC, and VESLMC. Compressive and flexural strengths for 3U18 and OPCC will be measured at ages of 12 hours, 36 hours, 72 hours and 7 days. Pre-packaged RSP material will be tested for slump, flexural strength and compressive strength. Strength will be measured at ages of three hours, six hours and 12 hours in order to determine the rate of strength gain. RSP material shall meet the same slump and strength requirements as required for RHCC. The 3U18 material will be tested for slump, unit weight, air

content, flexural strength and compressive strength. The 3U18 material shall meet the same plastic and hardened properties as required for OPCC.

IFA will provide the Design-Build Contractor the results of the tests. Relative yield will be measured in accordance with 722.04 for patching concrete produced with a volumetric mixer.

The trial batch shall be of sufficient quantity to allow IFA to perform all required tests from the same batch. Trial batch concrete shall not be used for more than one test. If a grout material and method of application is proposed for RHCC, LMC or VESLMC; additional test specimens shall be cast as directed by IFA's Concrete Engineer. Reference is made to the requirements of Placing and Finishing Concrete, as specified herein.

SECTION 507, BEGIN LINE 79, DELETE AND INSERT AS FOLLOWS:

Joints shall be sealed with joint sealing materials in accordance with the sealant manufacturer's recommendations*, within ¼ in. below the surface*. Transverse joints shall be sealed with hot pour joint sealant~~, silicone sealant or preformed elastomeric joint sealant~~. Longitudinal joints shall be sealed with hot poured joint sealant ~~or silicone sealants~~. *A distributor in accordance with 409.03 shall be used with an indirect-heat double boiler kettle and mechanical agitator. The hot poured joint sealant shall be placed utilizing a "V" shaped wand tip to allow the penetration of the materials into the joints.*

SECTION 507, BEGIN LINE 105, INSERT AS FOLLOWS:

(b) Partial Depth Patching*, Using HMA Surface*

SECTION 507, BEGIN LINE 121, INSERT AS FOLLOWS:

(c) Joint Repair, Partial Depth and Joint Repair, Bottom-half Using Concrete

Partial depth and bottom-half joint repair shall be in accordance with the following:

Quality Control Plan

A quality control plan, QCP, shall be in accordance with sections 1.0 through 4.7 of ITM 803, except that the Quality Control Technician shall be an ACI Certified Technician, Level I or higher. As a minimum, the QCP shall contain the following information concerning aspects of producing, placing, finishing and curing the patching concrete for joint restoration:

- *(a) Copies of all applicable ASTM ASSHTO and ITM standards relevant to work being performed*
- *(b) Testing facility, if applicable, and a list of testing equipment meeting the requirements of Section 6.3.1 of ITM 803.*
- *(c) Materials shall be identified as to their source, transportation, handling and storage.*
- *(d) Process control of aggregate to include, but not limited to:*
    - *a. Gradation testing for each aggregate and calculation of blended gradation for control within allowable tolerance.*
    - *b. Absorption values for each aggregate, how they were determined and subsequently checked*

c. Daily measurement and control of moisture content of each aggregate used in concrete

(e) Trial batch demonstration shall be described as to procedures, location, mixing equipment, batching sequence, accuracy and verification. The identification and intended use of each concrete mix.

(f) Batching of concrete during patching operations shall be described to include the weighing on scales, intended size of the batch, batching method, sequence and mixing time. The methods to monitor materials used and the record of each batch shall be included.

(g) Process control of concrete to address sampling and testing for slump, unit weight, relative yield, air content, water cementitious ratio and temperature. The frequency of tests shall be the first batch of the day and not less than three times per day including the first. If volumetric batching of concrete is utilized, the yield will be checked as described in 722.04 at the beginning of the day and not less than two times per day including the first. The QCP shall include details as to actions in response to test results.

(h) Joint repair operations shall be described, to include the materials and equipment used for re-establishing longitudinal and transverse joints; delivery, placement, consolidation, finishing, smoothness, texturing and curing of concrete, to include procedures for monitoring each operation.

(i) Process control for weather restrictions shall be addressed.

(j) Documentation and Submittals

Pre-Patching Meeting Requirements

A pre-patching meeting between IFA and the Design-Build Contractor will be held on-site prior to beginning the work. The following shall be reviewed:

(a) Work schedule
(b) Traffic control plan
(c) Equipment calibration and adjustments
(d) Inspection and evaluation of the condition and adequacy of equipment, including units for transport of materials
(e) CMDP
(f) Design-Build Contractor daily rate of production per work crew
(g) Quality Control Plan

PCCP Removal

PCCP removal areas for partial depth patching will be marked. The Design-Build Contractor shall remove all concrete to the limits shown in the plans or as directed by IFA. A machine configured to safely and consistently mill the necessary profile as detailed in the plans shall be provided. The teeth on the milling head shall be spaced at either $^1/_2$ or $^5/_8$ in. The machine will be approved by IFA prior to the start of work. Whenever possible, the rotating axis of the milling head shall operate perpendicular to the joint being repaired. Should PCCP removal be confined to one side of a joint, the milling machine shall be controlled so as to not cause damage to the adjacent pavement. The ends of each continuous milled section shall have the same profile as the sides. This shall be accomplished by the use of chipping hammers.

Unless otherwise approved by IFA, areas that are less than 1 sq ft shall be removed by saw cutting and chipping. The saw cutting shall be to a depth of 2 in. within the marked area. Overlapping saw cuts at the outer perimeter of the patch shall not extend more than 2 in. beyond the intersection. Removal of the concrete within the limits of the saw cuts shall be by hand chipping tools or hand held mechanically driven equipment. Mechanical hammers may be used to remove the concrete inside the area delineated by the saw cuts but shall not be heavier than a nominal 35 lb class. Mechanically driven tools shall be operated at a maximum angle of 45° from the PCCP surface. A jack hammer with a wide chisel bit shall be used at a distance of 2 in. from the saw cut to remove the vertical edge and create a taper similar to the milling operations.

Removal areas within jointed reinforced concrete pavement, JRCP, are not required to utilize milling to initiate partial depth patching. Saw cutting and hand chipping may be used as described above. Any wire mesh reinforcement exposed during the removal operations shall be removed.

PCCP removal areas shall not remain open overnight unless otherwise approved by IFA. Shoulders or adjacent PCCP damaged during the removal operations shall be repaired as directed.

Milling, or sawing and hand chipping, is allowed for transverse joint repairs that intersect a longitudinal joint that has already undergone partial depth patching. Removal areas along a longitudinal joint shall not disturb a transverse joint that has already undergone partial depth patching per this specification. Prior to any transverse joint repair that intersects a previous longitudinal repair, the existing partial depth patch along the longitudinal joint shall have achieved at least 12 hours of curing, a passing soundness inspection and adequate strength, as defined in the section entitled Opening to Traffic. If there is no need for the transverse joint repair to completely cross the longitudinal joint, milling operations along the transverse joint shall stop short of the longitudinal joint so as not to cause damage beyond the joint. Sawing and hand chipping shall be used to complete the removal process up to the longitudinal joint.

IFA will check milled surfaces after PCCP removal to identify any unsound concrete that remains. Such areas of unsound concrete will be delineated and shall be removed with a chipping hammer. IFA may allow unsound concrete to remain below exposed dowel bars or tie bars. Dowel bars shall not be damaged during the removal of unsound concrete. At locations where a transverse joint meets the edge of pavement, or where joints intersect, IFA will determine if the concrete is deteriorated for the entire depth, within the limits detailed in the plans for bottom–half joint repair. If either end of a dowel bar is exposed or misaligned in a bottom-half joint repair, the exposed portion shall be removed or cut flush with the concrete surface, as directed by IFA.

If the combination of removal for partial depth patching and bottom-half patching exposes more than four adjacent dowels at a contraction joint, IFA shall be notified to determine if full depth patching is to be conducted in accordance with 506.07(b).

If a snowplowable raised pavement marker is to be installed in an area of partial depth joint repair, the width of the removal area, in proximity to where the RPM is to be installed, may

have to be increased in order to provide the necessary clearances as specified in the section entitled Snowplowable Raised Pavement Markers.

Surface Preparation and Joint Filler Installation

The milled or hand chipped cavities shall be prepared to provide a clean, irregular surface for the development of a good bond between the patching concrete and the existing pavement. The broken concrete pieces shall be removed, and the cavities shall be swept clean. The surface of the cavity shall be thoroughly sandblasted and cleaned with compressed air to remove all dust and chips. The time for cleaning with compressed air shall be as close to placing the concrete as possible, but not after installing any joint filler. If joint filler material has been installed, the surface may be cleaned again by using compressed air at low pressure so as not to damage the in place filler or sand below the top of any exposed dowel bar just prior to placing the grout or concrete. The air lines for sandblasting and compressed air cleaning shall be equipped with oil traps to prevent contamination of the surfaces.

The installation of joint filler is required before concrete placement and shall be of a width that matches the existing transverse or longitudinal joint being repaired, to a minimum of 3/8 in. The joint filler shall extend at least 3 in. beyond the length of the patch area. Joint filler shall be installed as one piece for the depth of the repair. Splicing long lengths of joint filler may be allowed. The method of spicing will be approved by IFA. The joint filler shall not only reestablish the joint within the repair, but it shall also prevent the infiltration of the concrete into the crack or joint. In some instances, mainly when concrete is removed under dowels, the joint filler will not completely plug the joint or crack. If this circumstance is encountered, joint compression relief shall be provided by filling any void below the joint filler with clean #23 natural sand. Duct tape, or other material approved by IFA, shall be placed as a bond breaker on exposed dowel bars.

Areas designated by IFA as requiring bottom-half joint repair shall be prepared as shown on the plans. The reinforcing bars shall be installed in accordance with 503.03(g).

Use of joint filler is required for establishing compression relief at existing D-1 contraction joints. Patching at longitudinal joints shall utilize either a joint filler to re-establish the joint or perform the following:

(a) Tool the plastic patching concrete after placement to create a weak plane at the original joint location. The joint tooling equipment shall be identified in the QCP and approved by IFA prior to use. Tooling of the joint may be eliminated if the concrete used in the patch has been verified by IFA as meeting the shrinkage requirements stated in Concrete Mix Criteria.

(b) Saw the joint once the patching concrete has adequately hardened. Initial sawing of the tooled joint shall be performed with an 1/8 in. blade. Initial sawing shall be done with care as soon as possible, without causing excessive raveling of the repair material. The depth of the saw cut shall extend to the full depth of the repair, plus 1/4 in., but no closer than 1 in. above the tie bar. Removal of covering placed for wet curing may be allowed for short distances to facilitate sawing of the joint; however, the exposed surface shall be kept wet and not allowed to dry. The covering for wet curing shall be replaced immediately after sawing is completed.

Concrete Mixing and Transportation

For onsite weighing and batching of OPCC or RHCC, the appropriate number of pre-packaged bags of cement, shall be at the mixing site to accommodate the day's production. The fine and coarse aggregate shall be pre-weighed to within 2.0% of their target for the batch size and placed in appropriate containers. Each aggregate component for a batch shall be identified as to material and weight, to facilitate accurate batching into the mixer in the proper sequence. Water, air entraining agent and chemical admixtures, if appropriate, shall be at the mixing site. The water necessary to provide the required slump shall be measured by weight or volume and recorded for each batch. All components of cement, aggregates, water, air entraining agent and any chemical admixture shall be charged into a paddle type mixer according to the sequence defined in the QCP and mixed for a minimum of five minutes. The use of Type C or E chemical admixtures to facilitate early strength of pavement repairs, solely for the purpose of allowing construction traffic, shall not occur unless approved by IFA. The location of mixing shall be on the job site in close proximity to the patching operations.

Approved MnDOT 3U18 pre-packaged concrete, and approved chemical admixture, may be used instead of batching individual components. The pre-packaged concrete shall utilize enough batch water to achieve the required maximum slump when mixed in a paddle mixer.

A pre-packaged RSP material containing coarse aggregate may be used if approved by IFA. Addition of water and mixing shall be in accordance with the manufacturer's instructions.

Wash water shall not be used as a portion of the mixing water for any patching concrete.

IFA may allow batching and mixing of OPCC or RHCC in a mobile type volumetric mixer meeting the requirements of 722.08 except the mixer shall carry sufficient quantities of unmixed ingredients to produce at least 2 cu yds of patching site concrete at the work. Calibration of the mixer shall be in accordance with 722.12, except the bin gate for each of the aggregates shall be set by the same procedure used to establish the cement counter. The properties of absorption, bulk specific gravity, SSD, and total moisture content shall be used for each of the aggregates to determine the target weight for the aggregate when adjusting and setting the gates. Calibration frequency of the mixer shall be in accordance with 722.12(a), except that adjustments to the aggregate weights shall be based on changes in total moisture content or absorption. LMC and VESLMC shall be mixed in a mobile type volumetric mixer as described previously.

Weather Limitations

Patching concrete that has been placed shall be protected from rain. Materials for protection of the edges and surface of the repair area shall be readily available for such use. Should any damage result, IFA will suspend operations until corrective action is taken.

Patching concrete shall not be placed when either the ambient temperature or existing concrete pavement temperature is less than 50°F, unless cold weather protection is utilized. Cold weather protection shall be made ready for implementation should the National Weather Service predict air temperatures of 36°F or less within 24 hours of the scheduled patching operations. An approved mix meeting the requirements defined in the section entitled Concrete Mix Criteria, may

be used when cold weather is predicted. Partial depth joint repair operations shall not occur after October 24th, unless approved by IFA. Such approval will be based on the existing concrete pavement having a temperature not less than 50ºF at time of placing concrete and the National Weather Service predicts the average daily temperature to be above 50ºF for at least seven consecutive days, and the low temperature during that time is predicted to be 40ºF or higher.

Temperature restrictions concerning the use of Chemical Anchor Systems in anchoring deformed steel reinforcement for full depth patching, modified, shall be in accordance to the manufacturer's recommendation.

Placing and Finishing Concrete

OPCC, 3U18 and RSP patching concrete shall be placed within 15 minutes of mixing. RHCC, LMC and VESLMC shall be placed within five minutes of mixing. All patching concrete shall be placed such that a cold joint does not occur within the limits of an individual, or intersecting, longitudinal or transverse, joint repair. Placement may be terminated to one side of a joint as long as the joint face or joint filler is properly supported. Repair along a transverse joint that intersects a previously repaired longitudinal joint is allowed as described in the section entitled PCCP Removal.-

–

For OPCC and 3U18 material, a bonding grout shall be applied to the prepared surface. The grout shall consist of two parts Type I or Type II Portland cement and 1 part sand mixed with sufficient water to form a slurry that can be spread evenly onto the prepared concrete surface. The grout is to be mixed mechanically and applied by brushing or scrubbing, with a stiff bristle broom, onto the in-place prepared concrete surface. The pot life of the grout shall not extend beyond one hour. OPCC and 3U18 concrete patch material shall be placed immediately after grouting.

For RHCC, LMC and VESLMC, thoroughly soak the cleaned surface and maintain it in a wet condition for at least two hours immediately prior to placing the patching concrete. Maintaining a wet surface shall be accomplished by covering the soaked surface with wet burlap. The burlap shall be re-wetted as necessary. A layer of white opaque polyethylene film, that is at least 4 mils thick, may be used to offset the need to rewet the burlap. Prior to placing the patching concrete, the burlap shall be removed. Any standing water in depressions, holes or areas of concrete removal shall be blown out with compressed air or other type of blower sufficient for removal, or by the use of an approved vacuum system. The surface shall be damp at time of placing the patching concrete. For RHCC, LMC and VESLMC patching concrete, a bonding grout may be used in lieu of the wetting and soaking period described above. The bonding grout and method of application shall be approved by IFA's Concrete Engineer. Verification of the bonding grout and method of application will be conducted at the time of the trial batch.

When using RSP material, the bonding grout and method of application shall be as recommended by the manufacturer of the prepackaged material.

When using a bonding grout for OPCC, 3U18, RHCC, LMC, VESLMC or RSP; if an applied grout dries or whitens, the patch concrete shall not be placed and the surface shall again be prepared by sandblasting to remove the old grout and subsequently cleaned as specified in the section entitled Surface Preparation.

Concrete for partial depth joint repair shall be placed monolithically with concrete for bottom-half joint repair, using the same concrete mixture. The concrete shall be consolidated by internal vibration and struck off level to the adjacent PCCP. The joint filler shall remain straight for the length of the repair, within a tolerance of ± 1/4 in. The concrete shall be hand finished and shall be controlled so that excess mortar and water is not worked to the surface. Final hand finishing shall have the trowels or floats work the surface from the joint toward the edge of the patch. Placing and finishing operations shall not produce rounding of the surface at any joints or headers. Edging is required for fresh concrete adjacent to all joint filler or forms. Concrete repairs at transverse joints shall not protrude into HMA shoulder more than 3/8 in. by forming or sawing the edges. The concrete surface of the partial depth joint repair shall be textured for skid resistance by brooming in the longitudinal direction of the repair, including locations where Profiling PCCP is specified.

The final finished surface of the repair shall not vary more than 1/8 in. from the existing pavement surface as measured with a straight edge over the joint. Partial depth patches that are not smooth shall be corrected by diamond grinding. Such grinding shall be completed after the concrete has gained sufficient strength for opening to traffic.

When using OPCC or 3U18 patching concrete, immediately upon completion of the finishing and texturing of the partial depth patch, a grout, as previously described for bonding, shall be applied with a brush to the outer edge of the patch.

Curing

For partial depth patches using OPCC or 3U18, a liquid membrane forming curing compound shall be applied within 10 minutes of concrete placement or once the bleed water has dissipated, unless otherwise directed by IFA. The curing compound shall be agitated in the shipping container to obtain a homogenous mixture for transfer to the job site equipment used before application. Application of curing compound shall be in accordance with the following

(a) Rate of application shall be at least one gallon per 150 sq ft of surface curing area.
(b) Curing compound shall be applied to provide a uniform, solid white opaque cover on all exposed concrete surfaces. After application, the surface shall visually equate to a white sheet of paper.
(c) If the applied curing compound is damaged by rain or other means during the curing period, the damaged area shall be repaired as soon as possible by re-application at a rate equal to the original coat.
(d) If IFA determines that the initial, or corrective re-application, results in unsatisfactory curing, IFA may require discontinuance of using curing compound and instead require the use of wet double burlap or waterproof covers in accordance with 504.04.
(e) If rapid set patch material is used in cold weather condition, the method and materials used for curing shall be in accordance with the manufacturer's recommendation. If curing compound is allowed, the compound may be warmed in a water bath during the cold weather at a temperature not exceeding 100ºF. Thinning the curing compound with solvents is not allowed.

For RHCC, LMC and VESLMC, water curing shall be applied in accordance with 702.22(a)1. Water curing shall be initiated after finishing and as soon as the concrete patch can support the wet covering. For LMC, water curing shall be maintained for a period of at least 24 hours. For VESLMC, water curing shall be maintained for a minimum of three hours and shall be removed no sooner than one hour before the patch is to be opened to traffic. For RHCC, water curing shall be maintained for a minimum of 1½ hours and shall be removed no sooner than one hour before the patch is to be opened to traffic.

Whenever weather conditions are such as to cause unusual or adverse placing and finishing conditions or equipment failures occur, the application of curing shall be expedited, or temporarily suspend the mixing and placing operations, as the conditions require.

If it becomes necessary to remove the coverings in order to saw joints or perform other required work, the coverings shall be removed for the minimum time required.

Failure to comply with the above provisions will result in IFA, in conjunction with the Concrete Engineer, to apply a monetary deduction of 100% of the unit bid price for the partial depth joint repair in question. In lieu of a monetary deduction, the partial patch may be removed and replaced at no cost to IFA. If the partial depth patch is removed exposing an underlying bottom-half patch, the bottom-half patch shall also be removed and replaced.

Job Control

Control of concrete for slump, air content, unit weight or relative yield, as appropriate for the mix, and flexural strength beams will be determined on the basis of tests performed by IFA in accordance with 505. Concrete and necessary labor for sampling shall be furnished as required by IFA. Testing for slump, unit weight or relative yield as appropriated for the mix, and air content will be on the first batch of the day and at a minimum of once per every 400 cu ft. If a volumetric mixer is used, the yield will be observed at the time of QC testing to verify compliance and a target unit weight will be established. During production the unit weight shall not vary more than ±3.0% from the target. Beams will be made for evaluating the quality of the delivered mix at least once per every 800 cu ft or whenever slump, unit weight or air content are failing the upper limit. The beams will be tested for compliance with flexural strength requirements, at an age consistent with the mixtures intended use as defined in the section entitled Concrete Mix Criteria.

IFA will notify the Design-Build Contractor when test results for slump, unit weight or air content or flexural strength are outside requirements. Rounding will be in accordance with 109.01(a).

Joint Sealing

Joint openings within a repair area shall be maintained for the full depth of the patch as described in the sections entitled Surface Preparation and Joint Installation and Placing and Finishing Concrete. The joints shall be sawed to create a reservoir for the sealant, to be followed by cleaning and sealing. The cleaning and sealing of the joint shall be in accordance with 507.04, except as revised by this special provision ~~that only hot pour sealant shall be used~~. The new hot pour sealant shall extend beyond the limits of the patch to any existing sealant that is to remain in place.

Any grinding to correct smoothness of partial depth patches shall be completed prior to joint sealing.

Snowplowable Raised Pavement Markers

Snowplowable raised pavement markers, RPM, shall be located and installed in accordance with 808.11, except that the marker shall be installed a minimum of 2 in. from the longitudinal joint. If the marker is installed within the limits of the partial depth patch, the slot shall be at least 2 in. from the edge of the repair. The patch material shall have obtained the minimum opening to traffic strength of 500 psi flexural and 4000 psi compressive, prior to creating the slot for the adhesive and RPM. The slot may be created by grinding or by saw cutting and hand chipping. Each RPM installation will be inspected for proper installation. There shall be no visual cracks at the surface of the partial depth patch and the installation will be sounded to detect any loss of bond between the partial depth patch material and the substrate PCCP. Any such defect shall require repair of the partial depth patch and reinstallation of the RPM to the satisfaction of IFA, which may involve removal and replacement of the partial depth patch along the longitudinal joint between the limits of the transverse contraction joints. Any such repairs shall be made at no additional cost to IFA.

Opening to Traffic

Completed partial depth repairs and bottom-half repairs may be opened to traffic when flexural strength tests indicate a modulus of rupture of 500 psi or greater. Beams for this purpose will be cast from patching concrete placed near the very end of each day's production for each different CMDP used and cured in accordance with Section 10.2 of AASHTO T 23 and 505.01(a). If RHCC, LMC, VESLMC or RSP material is used, the opening to traffic may be based on testing 4 in. by 8 in. cylinders achieving a minimum compressive strength of 3200 psi, based on the average of two results.

Prior to opening to traffic, the Design-Build Contractor and Engineer will conduct an inspection of the partial depth patches to determine any failure. Failure will include, but are not limited to, debonding of the patching concrete or random surface cracks. The repair of the failed partial depth patch or bottom-half patch shall be completed by an approved method prior to opening the patched pavement to non-construction traffic.

SECTION 507, AFTER LINE 169, DELETE AND INSERT AS FOLLOWS:

Partial depth joint repair will be measured at the surface, by the square foot, using linear dimensions measured to the nearest 0.1 foot. In isolated areas where the typical width of repair is exceeded, IFA will measure for payment only those areas that go beyond the typical limits of repair and exceed 1 square foot. This is not a cumulative quantity within a single partial depth repair area.

Bottom-half joint repair will be measured by the square foot using linear dimensions measured to the nearest 0.1 foot at the mid-depth of the pavement, when the following conditions are met:

(a) The PCCP is removed full depth to visibly expose the subbase below.

(b) The minimum number of reinforcing bars are furnished and installed as shown in the details of the plans.

If the above requirements for bottom-half repairs are not met, IFA will only take measurements for payment under partial depth joint repair regardless of depth of the repair.

Extra width of removal to accommodate the Design-Build Contractor's equipment will not be measured.

For repairs at intersecting joints, the same area of joint repair will not be measured twice.

Routing and sealing of cracks, filling of cracks, sawing and sealing of joints *outside limits of partial depth joint repair*, and filling of joints *outside limits of partial depth repairs* will be measured by the linear foot, complete in place. Retrofit load transfer will be measured by each dowel bar assembly installed, complete in place. PCCP patching*, full depth*, will be measured in accordance with 506.12. *If approved by IFA, partial depth joint repair procedure and materials may be used to conduct partial depth repair of PCCP that is not located at a joint or crack and will be measured for payment.* Profiling, regardless of depth, will be measured by the square yard. Asphalt material and drill holes for undersealing will be measured in accordance with 612.07.

SECTION 507, AFTER LINE 185, INSERT AS FOLLOWS:
measured. *Sawing and sealing of joints in areas of partial depth joint repair will not be measured.*

SECTION 507, AFTER LINE 192, INSERT AS FOLLOWS:

Partial depth joint repair will be quantified at the contract unit price per square foot. Bottom-half joint repair will be quantified at the contract unit price per square foot. Routing and sealing of cracks, filling of cracks, sawing and sealing of joints *outside the limits of partial depth joint repair,* will be paid for by the linear foot, complete in place. The accepted quantities of retrofit load transfer will be paid for at the contract unit price per each assembly installed, complete in place. PCCP patching*, full depth,* will be paid for in accordance with 506.13. *Measured areas of partial depth joint repair that are not located at a joint or crack will be quantified as partial depth joint repair.* Profiling will be paid by the square yard. Undersealing and drilled holes will be paid for in accordance with 612.08. The accepted quantities of HMA partial depth patching will be paid for at the contract unit price per ton complete in place.

SECTION 507, AFTER LINE 213, INSERT AS FOLLOWS:

507-12191 Joint Repair, Partial Depth.....SFT
507-12192 Joint Repair, Bottom-half .....SFT

SECTION 507, AFTER LINE 216, INSERT AS FOLLOWS:

The partial depth joint repair shall include the trial batch for each concrete mixture, removing and disposing of the in place concrete pavement as marked by IFA, tapering the edges of the repair back at 30 to 60 degrees, cleaning, sandblasting and air blasting, treatment of dowel bars, furnishing and installing bonding grout, furnishing and installing joint filler or tooling and sawing to re-establish the joint within or along the repair, furnishing and placing the concrete within the repair, vibrating, screeding, finishing texturing, placing cement slurry around the edges,

curing and protecting the concrete, sawing and sealing to re-establishing joints, cleanup and any other materials, labor, equipment or incidentals necessary to complete the work as specified.

The bottom-half joint repair shall include the removing and disposing of the in place concrete pavement as determined by IFA, cleaning sandblasting and air blasting, treatment of dowel bars, furnishing and installing steel reinforcement, furnishing and installing bonding grout, furnishing and installing joint filler and sawing to re-establish the joint within or along the repair, furnishing, placing and vibrating the concrete within the repair, sawing and sealing to re-establishing joints, cleanup and any other materials, labor, equipment or incidentals necessary to complete the work as specified.

The areas of PCCP Joint Repair, which after inspection by IFA, are determined to need PCCP Patching, Full Depth in accordance with 506.13, will be quantified at 40% of the contract unit price per square foot for the work represented by the appropriate pay item. During periods of overnight lane closure, if IFA inspects an area of joint repair and determines that PCCP Patching, Full Depth in accordance with 506.13 is in order, the repair shall be completed using RHCC, LMC, VESLMC or RSP material in order to meet the opening to traffic requirement and will be quantified at 100 % of the contract unit price.

Any extra width of removal to accommodate the Design-Build Contractor's equipment shall be at no additional cost to IFA.

PCCP PATCHING, FULL DEPTH

Materials shall be in accordance with 506.02, except that concrete used in patches greater than 15 ft in length shall contain a limestone or dolomite coarse aggregate of Class AP quality.

The concrete mix designs for PCCP patches of any length shall be in accordance with 506.03. Change in Materials (a), Adjustments to Materials (b) and Other Adjustments (c) as stated in 506.03, except for admixture dosage rate, will not be allowed for concrete used in patches greater than 15 ft in length.

The concrete mix criteria for PCCP patches less than or equal to 15 ft shall be in accordance with 506.04.

The concrete mix criteria for PCCP patches longer than 15 ft shall be in accordance with 502.04. If high-early strength (HES) concrete is to be used the requirements of 502.04(b) are modified as follows:

a. The water cementitious ratio shall not be greater than 0.020 over the target stated in the CMDP and shall not exceed the maximum allowed by 502.04(b).

b. The design flexural strength of each CMD shall be set such that the minimum opening to traffic strength is achieved at an age consistent with the CMD use in the proposed work, including any lane closure restrictions. The HES, modified concrete shall achieve a minimum of 500 psi in three days.

c. Chemical admixtures types A, B, C, D, E, F and type G will be permitted with prior written approval. A Type C or Type E chemical admixture containing minimal amounts of chloride may be considered by IFA for approval. Calcium chloride, Type L, shall not be used in HES, modified concrete.

d. If types F or G chemical admixture are used in the HES modified concrete, the maximum slump for formed PCCP shall be 7 ½ inches.

HES modified concrete can be utilized for patches of 15 feet or less in length.

A trial batch shall be conducted on concretes meeting the mix criteria of either 502.04 or 506.04. Trial batches shall be in accordance with 506.05, except HES concrete is to include the following:

a. Flexural strength for HES modified concrete will be determined at a minimum of 4 hours, 24 hours and 3 days. Three beams will be cast for each beam set tested up to and including 24 hours for the purpose of establishing the rate of strength gain for the HES modified concrete and, if approved by IFA, for maturity. An alternate break schedule at ages prior to 24 hours may be adjusted, as directed by IFA.

b. If maturity is to be determined, it will be as directed by IFA. All molds, facilities and materials necessary to prepare and initially cure the beams shall be provided. In addition, internal vibrators, per section 5.5 of AASHTO T 23, shall be provided for the purpose of consolidating concrete in the beams. IFA will provide the apparatus to test the beams for flexural strength. Personnel shall be provided to assist IFA in casting, curing and testing the beams.

Job Control is to be in accordance with 506.06 except as follows:

a. Plastic properties will be measured on each sample of concrete from which beams are made.

b. Air content, slump and relative yield for HES modified concrete will be tested on the first load of the day and at least once every 50 cubic yards.

c. For concretes meeting the requirements of 502.04(b) HES modified and 506.04, at least one set (each set consisting of two beams) will be cast for every 150 cubic yards of concrete placed. The beams will be tested to validate the minimum strength of 500 psi at an age of 3-days.

d. Additional beams will be cast for the purpose of opening to traffic for concrete meeting the requirements of 502.04(a), 502.04(b) HES modified concrete, and 506.04. Such beams will be cast from sampling the last load to finish the patching operations for the day's production for each of the concrete mixes used.

SECTION 506, AFTER LINE 152, INSERT AS FOLLOWS:

a. Transverse joint spacing shall not be more than 15 ft. Transverse joints shall not be closer than 6 ft.

b. Placement of patches shall not create remnants of existing panels less than 6 ft in length. If a patch location will create a remnant less than 6 ft in length, the patch shall be extended a minimum of 1 foot beyond the existing D-1 joint location to good solid concrete.

c. Patches that are less than 6 ft from an existing D-1 shall be extended a minimum of 1 ft beyond the existing D-1 joint location to good solid concrete.

The concrete mixing and transportation shall be in accordance with 506.08, except that for patches greater than 15 feet in length, the concrete mixing and transportation shall be in accordance with 502.10.

Concrete shall be placed, finished, textured, cured and inspected in accordance with 506.10, except as follows:

a. Patches longer than 6 ft shall be textured by tining in accordance with 504.03.

b. Patches longer than 15 ft shall be cured in accordance with 504.04(a) unless ambient air and concrete temperatures warrant following the requirements in 506.10.

c. PCCP patches shall not be anchored to adjacent CRC pavement. PCCP patches shall not be anchored to more than one existing adjacent PCCP slab, and no existing PCCP slab shall be anchored to more than one adjacent PCCP patch. If the situation arises that one patch cannot be anchored, the non-anchored patch shall be the shortest of the available patches.

d. All patches greater than 15 ft and shall be placed in accordance with 502.12.

e. Patches longer than 15 ft shall have joints in accordance with 503.

f. Patches longer than 15 ft shall be finished in accordance with 504.

g. Dowel bars for load transfer shall be installed in the existing concrete at a 12" interval across the width of the patch with the first dowels offset from the edge of pavement a maximum of 1 foot. Additional placement

details and dowel bar size requirements shall follow the standard drawing E 506-CCPP-01.

h. Existing D-1 contraction joints shall only be re-established where PCCP patches are equal to or longer than 16 feet.

i. When possible given all other constraints, for patches equal to or over 16 feet, new D-1 Contraction Joints shall be located at existing adjacent D-1 joint locations or adjacent mid-panel cracks.

Opening to traffic shall be in accordance with 506.11 except that patches longer than 15 ft will be controlled as follows:

a. Construction vehicles, equipment, or traffic may be allowed on the PCCP containing HES concrete, when a flexural strength of 425 psi is achieved. The flexural strength shall be determined by averaging two beams cast from each of the job control samples cast for that purpose.

b. Concrete meeting the mix criteria requirement of 502.04(a) shall be in accordance with 502.18 except that the modulus of rupture value shall be 425 psi or greater for all cases.

c. Any construction vehicle or equipment that may damage the PCCP shall not be used on the PCCP unless adequate protection is provided. Approved joint cutting saws may be operated on the PCCP as determined by the Design-Build Contractor.

PCCP Patching, Full Depth, Modified

Materials shall be in accordance with 506.02, except that concrete used in CRC patches shall contain a limestone or dolomite coarse aggregate of Class AP quality.

The concrete mix designs for CRC patches of any length shall be in accordance with 506.03. Change in Materials (a), Adjustments to Materials (b) and Other Adjustments (c) as stated in 506.03 will not be allowed for concrete used in CRC patches.

The concrete mix criteria for CRC patches shall be in accordance with 502.04, except High-Early Strength (HES) concrete is modified as follows:

a. The water cementitious ratio shall not be greater than 0.020 over the target stated in the CMDP and shall not exceed the maximums stated in 502.04(b).

b. Minimum flexural strength shall be 450 psi at an age consistent with the CMD use in the proposed work, including any lane closure restrictions. The HES shall achieve a minimum of 550 psi in two days.

c. Chemical admixtures types A, B, C, D, E, F and type G will be permitted with prior written approval. A Type C or Type E chemical admixture containing minimal amounts of chloride may be considered by the Engineer for approval. Calcium chloride, Type L, shall not be used in HES concrete. Use of a HRWR or HRWRR admixture system per 912.03 is allowed; however, the components and dosage rates of the system shall be as recommended by the admixture manufacture and approved by the Engineer.

d. If types F or G chemical admixture are used in the HES concrete, the maximum slump for formed PCCP shall be 5 3/4 inches.

Trial batches shall be in accordance with 506.05, except HES concrete is to include the following:

a. Flexural strength for HES concrete will be determined at a minimum of 4 hours, 8 hours, 12 hours, 24 hours and 2 days. Three beams will be cast for each beam set tested up to and including 24 hours for the purpose of maturity. An alternate break schedule at ages prior to 24 hours may be adjusted, if approved by the Engineer.

b. Maturity will be determined in accordance with ITM 402. All molds, facilities and materials necessary to prepare and initially cure the beams shall be provided. In addition, internal vibrators, per Section 5.5 of AASHTO T 23, shall be provided for the purpose of consolidating the beams. The Department will provide the apparatus to test the beams for flexural strength. Personnel shall be provided to assist the Department in casting, curing and testing the beams.

Job Control is to be in accordance with 506.06 except that HES concrete will be controlled as follows

a. Air content, slump and relative yield will be tested on the first load of the day and at least once every 50 cubic yards.

b. At least one set (each set consisting of two beams) will be cast for every 150 cubic yards of concrete placed, as well as the last load placed. Beams will be used for testing flexural strength. Plastic properties of air content, slump and relative yield will be measured on each sample of concrete from which beams are made.

The concrete mixing and transportation shall be in accordance with 502.10.

Concrete shall be placed, finished, textured, cured and inspected in accordance with 506.10, except as follows:

a. The surface shall be finished with wet burlap or by wood floats for all patches less than 30 ft.

b. Patches longer than 30 feet shall be textured and tined in accordance with 504.03.

Patching limits shall meet pavement smoothness requirements in accordance with 502.20. Opening to traffic shall be in accordance with 502.18 except as follows:

a. Construction vehicles, equipment, or traffic may be allowed on the PCCP containing HES concrete, when a flexural strength of 425 psi is achieved. The flexural strength shall be determined by averaging the two beams cast from each of the job control samples. Any test that fails to meet flexural strength will be evaluated for accuracy by comparison to the maturity results.

Construction Requirements

PCCP Removal

The pavement shall not be scored with a concrete saw or jackhammers more than three days prior to when it will be broken, except when the pavement is closed to traffic. The pavement shall not be scored with a wheel saw more than one day prior to when it will be broken, except when the pavement is closed to traffic.

Any subbase or pipe underdrains damaged during patching operations shall be repaired or replaced.

The scoring and removal of pavement for CRC patches shall be as follows.

Two transverse saw cuts shall be made perpendicular to the centerline at each end of the patch, except that the saw cuts may be skewed slightly if necessary to maintain a minimum distance of 18 in. from the end of the patch to the nearest transverse crack in the pavement to remain in place. When approved by IFA, this minimum distance may be reduced to 6 in. in areas of close crack spacing where the pavement otherwise appears to be sound. The interior saw cut shall be made at the location that will provide the proper length of exposed existing steel as shown on the plans and shall be either full-depth or to a depth which will completely sever the longitudinal reinforcement. The longitudinal edges of the patch shall be formed by full-depth saw cuts. Patches one-half lane width or full lane width will be permitted. Saw cut extensions into pavement which is to remain in place will not be permitted. All outlining and interior saw cuts shall be made with an approved concrete saw. The shoulder between the full-depth saw cut and the pavement edge shall be removed using a hand held hammer and hand tools prior to pavement removal. If available, the Contractor may use an approved wheel saw to make the shoulder cut and removal.

The pavement between the interior saw cuts shall be removed by lifting. Sufficient care shall be taken to minimize subbase disturbance and prevent spalling of the pavement that is to remain in place. Any subbase or stabilized subbase material disturbed during pavement removal operations or determined unsuitable by the Engineer shall be removed and replaced with HMA patch material.

If IFA determines that the concrete has deteriorated to the extent that it is not practical to lift, the pavement may be broken into small pieces and removed. The breaking equipment shall not transfer an impact energy greater than 3000 ft lb (4000 J) per blow to the pavement surface.

The concrete in the splicing area, between the interior and outer saw cuts, shall be removed using handheld hammers and hand tools. The Contractor has the option to use a skid steer loader equipped with a hydraulic hammer to remove the concrete in the splicing area. Should the loader and hydraulic hammer damage the pavement and/or reinforcement which are to remain in place, the loader with a hydraulic hammer will no longer be allowed.

To prevent underbreaking of concrete to remain in place, the face of the concrete below the partial-depth saw cut shall be inclined slightly into the patch. The reinforcing steel in the splicing area shall not be bent to aid in removal of the concrete. If more than ten percent of the reinforcing steel in the splice area is damaged due to the Contractor’s operations, the patch shall be lengthened to provide the required steel exposure for splicing. If less than ten percent of the existing lap steel is damaged, it may be repaired by welding in lieu of lengthening the patch. No welding will be permitted on the splices between the existing steel and the new steel. Should the Contractor's operations cause a spall having a width or depth greater than 1 in. in the pavement to remain in place or cause excessive shattering or underbreaking of the existing slab to remain in place, a new saw cut shall be made extending the patch to remove the spall or underbreaking. After pavement removal, the pavement structure will be inspected by the Engineer to determine if it is sufficiently sound. If determined unsound, the Contractor shall extend the patch as directed by the Engineer.

The existing reinforcement steel shall be observed during the removal process to determine if there is any excess rusting or evidence of steel distress. Deteriorated steel will not be permitted in the splice area. The Engineer may require lengthening of the patch.

Placing Concrete

CRC patches shall conform to the standard details and cross section included in the plans, and the work shall conform to the applicable portions of Section 506, with the following exceptions.

a) Reinforcement and Joints. Reinforcement and joints shall be according to the following:

  a) The reinforcement shall be as shown on the plans.
  b) Patches shall be tied to the adjacent pavement with No. 4 transverse deformed bar, embedded 8 in. at 36 in. centers. The Contractor shall tie the steel together, using at least two secure ties for each lap splice. Should an existing lap splice be encountered in the patch splice area, the Contractor shall construct the new splice by tying both of the exposed reinforcement bars to the new reinforcement bar. Reinforcement steel shall be placed and supported on chairs according such that uniform unsupported lengths not exceeding 4 ft (1.2 m) are provided. In such cases where an uneven subbase hinders maintenance of a placement tolerance of ± 1 in. vertically, portland cement concrete, grout (mix one part cement and two parts sand with water), or HMA shall be used to adjust the chair height to allow the reinforcement to be placed within the specified tolerances. The longitudinal reinforcement bars

shall be the same size and spacing as the existing longitudinal reinforcement.

Method of Measurement

CRC Patching will be measured by the sq yd. The length of the pavement will be measured parallel to the surface of the pavement along the centerline of the roadway, excluding paving exceptions as shown on the plans. The steel reinforcement within the CRC Patching will not be measured for payment.

Basis of Payment

The accepted quantities of CRC Patching will be quantified at the contract unit price for PCCP Patching, Full Depth, Modified per square yard, completed in place. The steel reinforcement in the CRC Patching shall be included in the PCCP Patching, Full Depth, Modified.

Pay Item	**Pay Unit Symbol**
506-06333 PCCP Patching, Full Depth, Modified	SYS

Trial batch demonstrations shall be included in the cost of PCCP Patching, Full Depth, Modified.

The corrections for pavement smoothness and re-texturing shall be included in PCCP Patching, Full Depth, Modified.

Removal and replacement of PCCP Patching, Full Depth, Modified, damaged by freezing shall be with no additional payment.

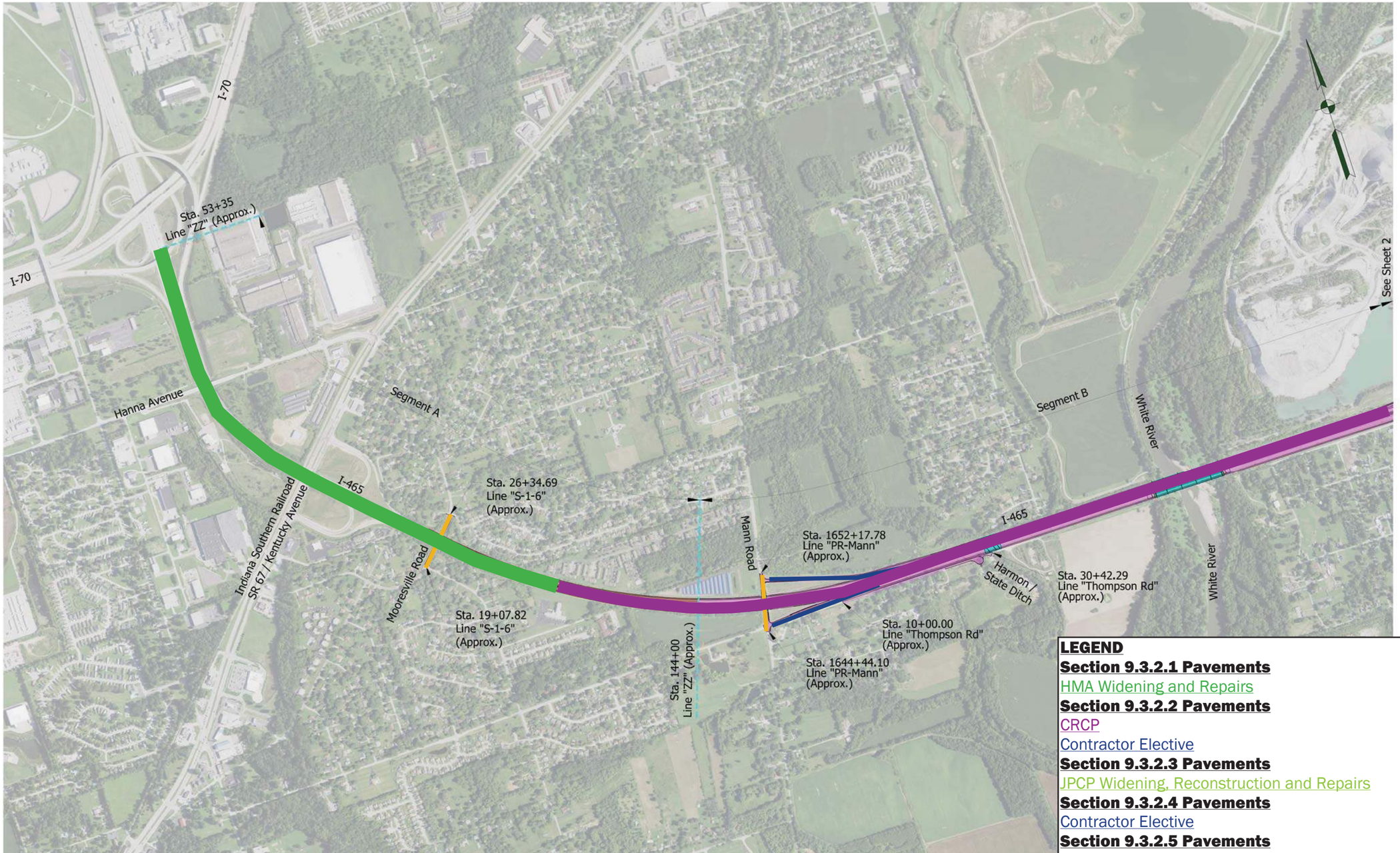

I-69 SECTION 6 CONTRACT 5

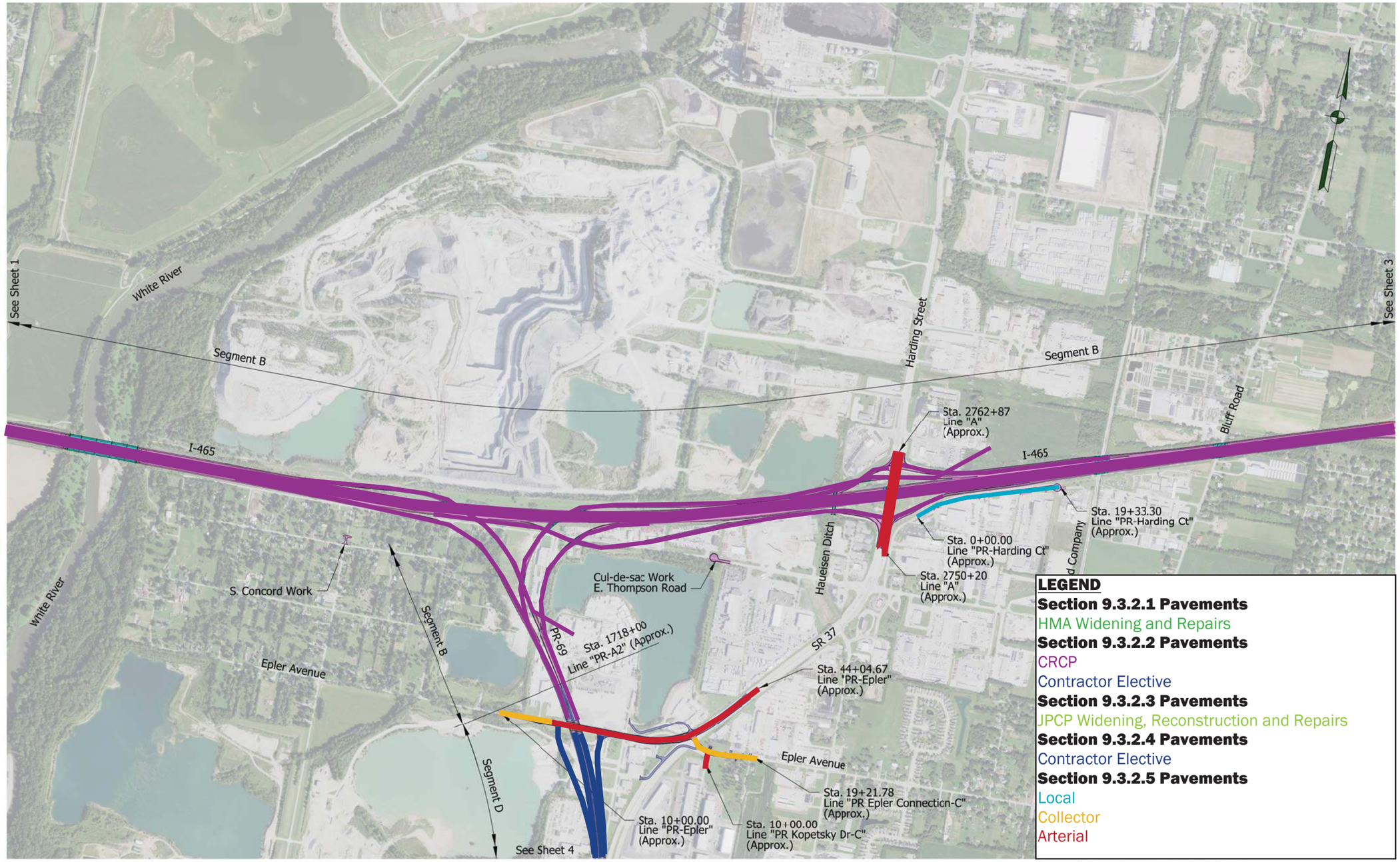

I-69 SECTION 6 CONTRACT 5

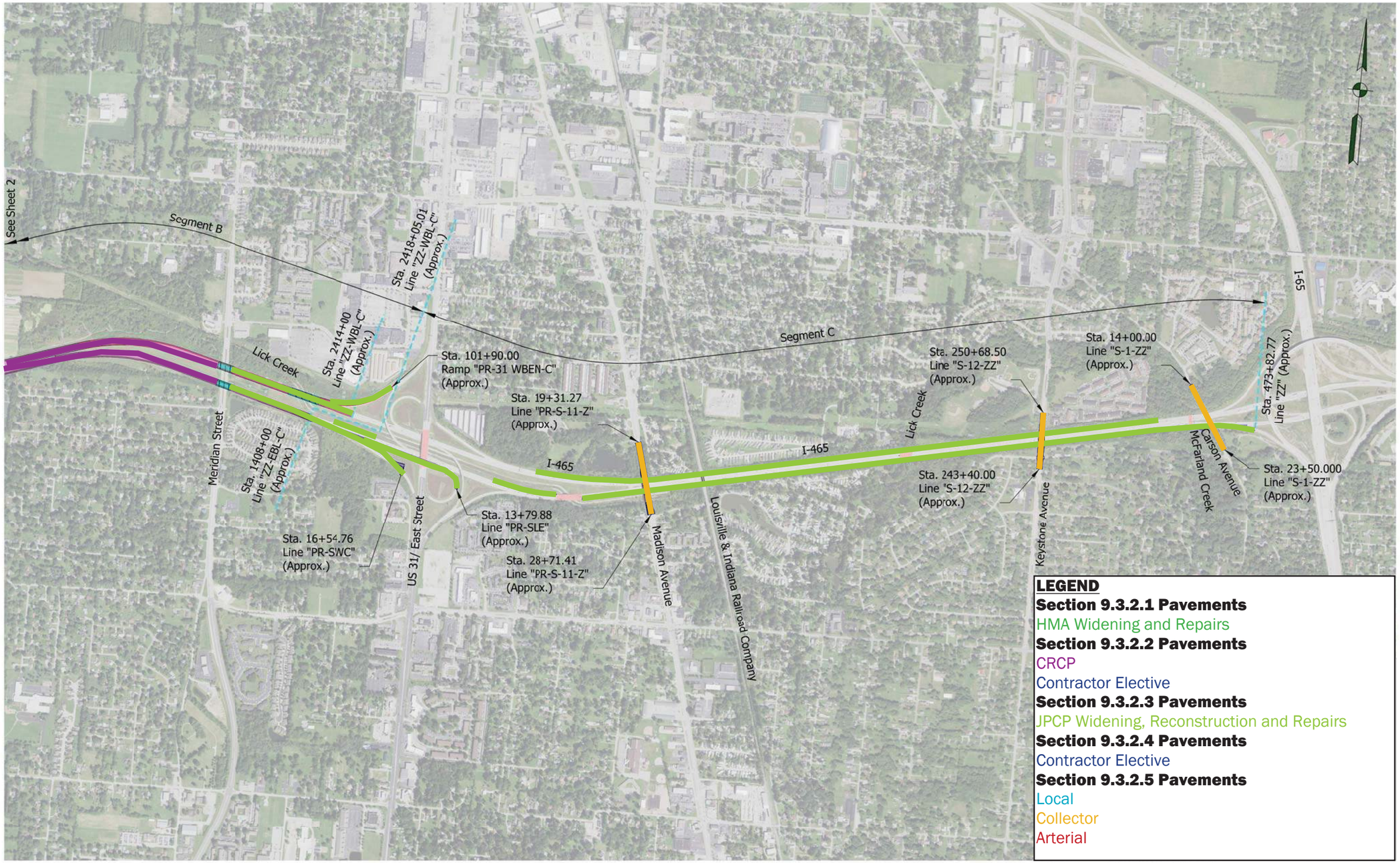

I-69 SECTION 6 CONTRACT 5

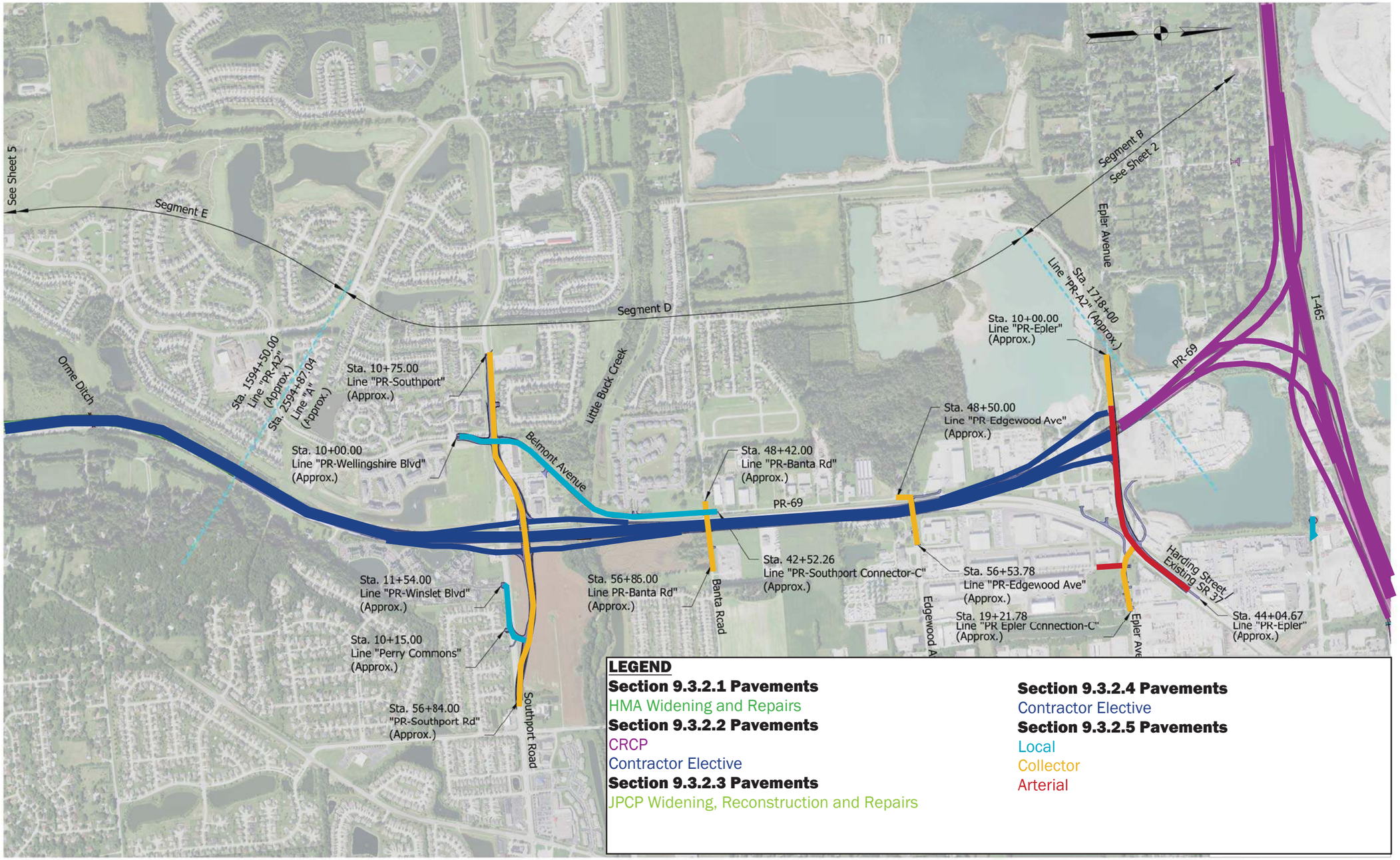

I-69 SECTION 6 CONTRACT 5

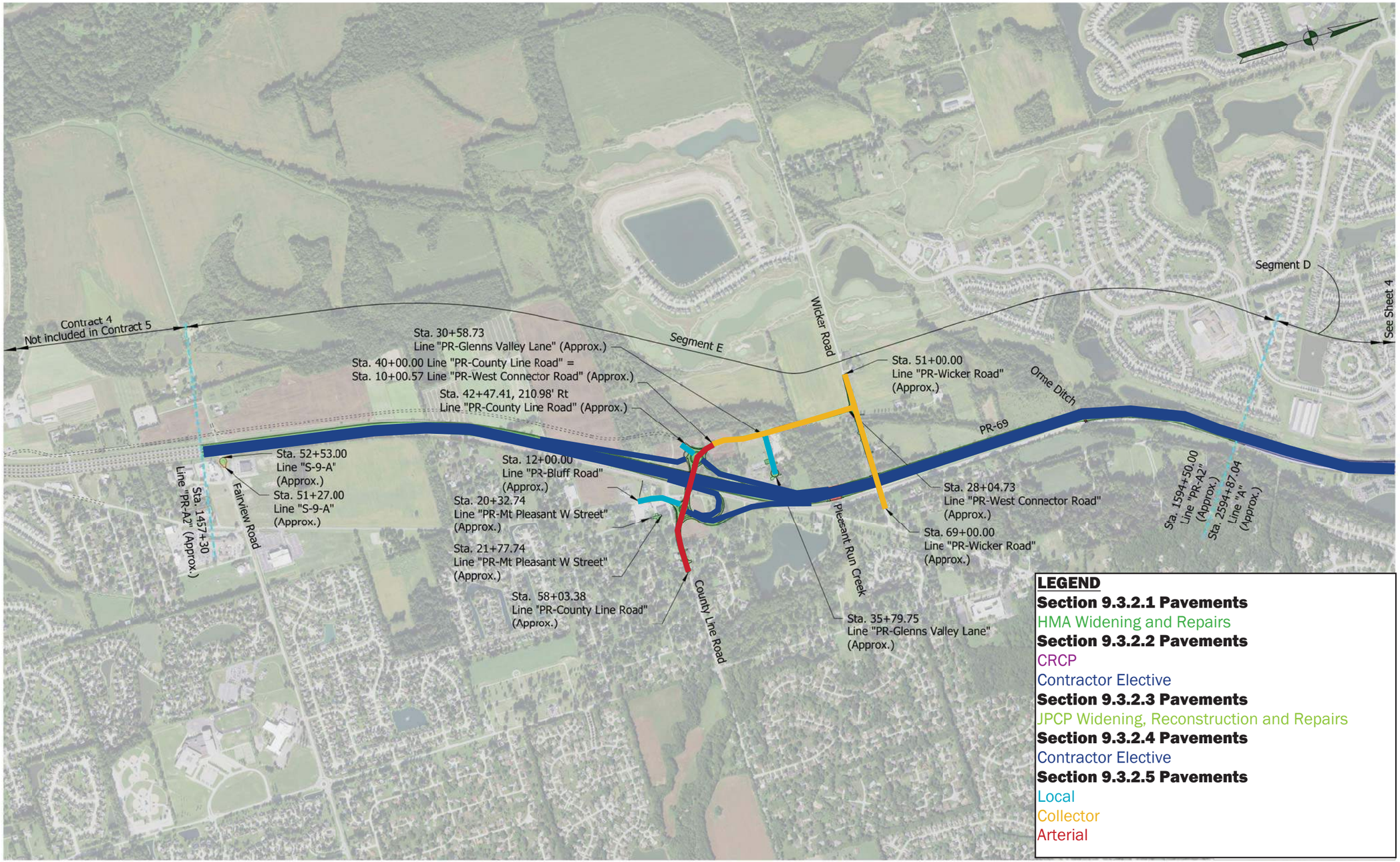

I-69 SECTION 6 CONTRACT 5

LAP DETAIL I

ENGLISH (inches)					
Bar Size	Pavement Thickness	Ⓐ (Approx. Spacing)	Ⓑ	Ⓒ	Ⓓ
#6	7¾" thru 8½"	18 spaces (19 bars) @ 7⅝"	3½"	3"	22"
#6	8¾" thru 9½"	20 spaces (21 bars) @ 6⅞"	3½"	3"	22"
#6	9¾" thru 10½"	22 spaces (23 bars) @ 6¼"	3½"	3"	22"
#6	10¾" thru 11½"	24 spaces (25 bars) @ 5¾"	3½"	3"	22"
#6	11¾" thru 12½"	27 spaces (28 bars) @ 5⅛"	3½"	3"	22"
#7	9¾" thru 10½"	16 spaces (17 bars) @ 8⅝"	3½"	3"	26"
#7	10¾" thru 11½"	18 spaces (19 bars) @ 7⅝"	3½"	3"	26"
#7	11¾" thru 12½"	19 spaces (20 bars) @ 7¼"	3½"	3"	26"
#7	12¾" thru 13½"	21 spaces (22 bars) @ 6½"	3½"	3"	26"
#7	13¾" thru 14½"	23 spaces (24 bars) @ 6"	3½"	3"	26"
#7	14¾" thru 15½"	24 spaces (25 bars) @ 5¾"	3½"	3"	26"
#7	15¾" thru 16½"	26 spaces (27 bars) @ 5¼"	3½"	3"	26"

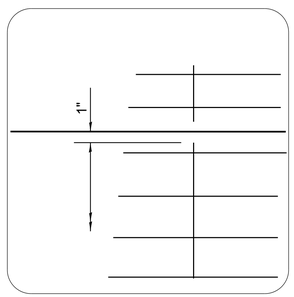

DETAIL A

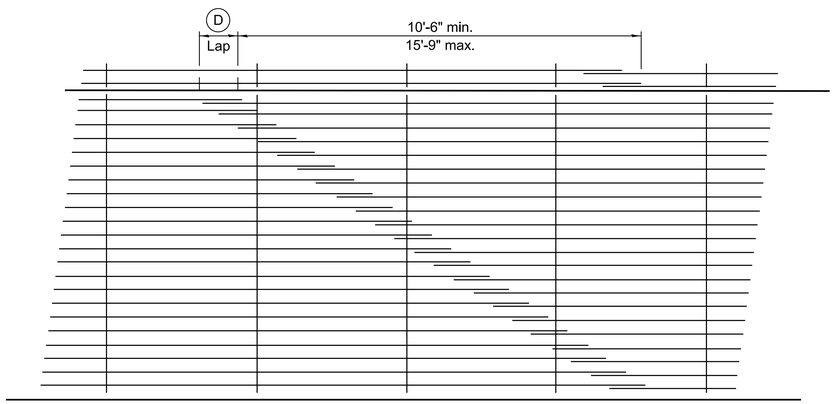

LAP DETAIL II

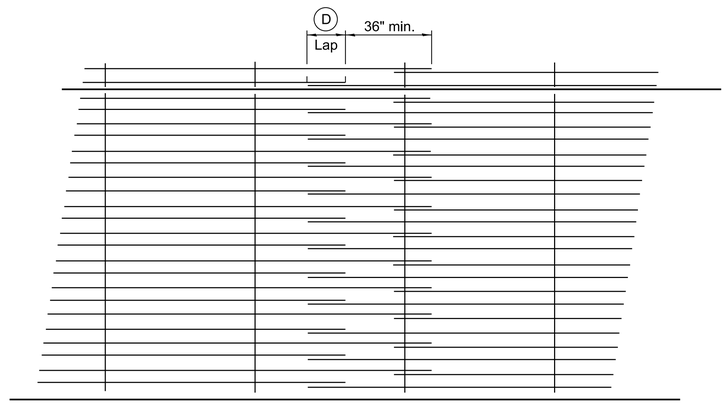

LAP DETAIL III

GENERAL NOTES

1. Except as noted or shown, the dimensions and notes specified for LAP DETAIL I are typical for LAP DETAIL II and III.
2. The Ⓑ dimension and the distance from the end of the transverse bar to the edge of pavement may be increased by 1" for slip form paving.
3. The minimum length of longitudinal bars shall be 30' except as required to establish the lap arrangement selected.

DRAFT
NOT FOR CONSTRUCTION

RECOMMENDED FOR APPROVAL _____
DESIGN ENGINEER DATE

DESIGNED: _____ DRAWN: _____
CHECKED: _____ CHECKED: _____

INDIANA
DEPARTMENT OF TRANSPORTATION

BAR REINFORCEMENT FOR CRC PAVEMENT

HORIZONTAL SCALE	BRIDGE FILE
AS NOTED	TBD
VERTICAL SCALE	DESIGNATION
AS NOTED	TBD
SURVEY BOOK	SHEETS
ELECTRONIC	1 of 2
CONTRACT	PROJECT
B-36910	1600808

IP_PWP:dms38409\barreinfforcrcpvmt.dgn

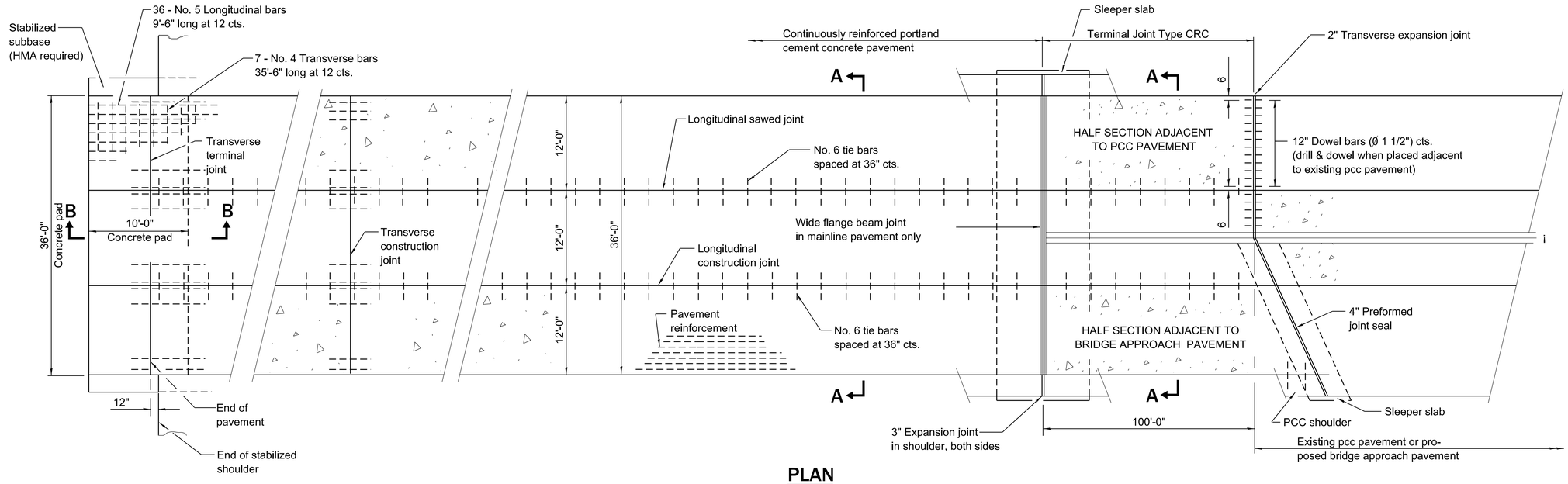

PLAN

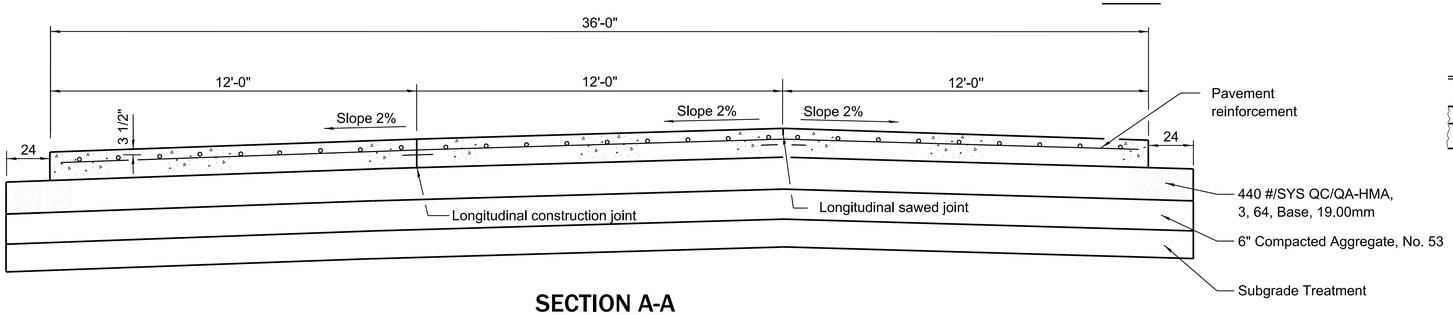

SECTION A-A

(TYPICAL 3-LANE, 1-WAY WITH SHOULDERS)

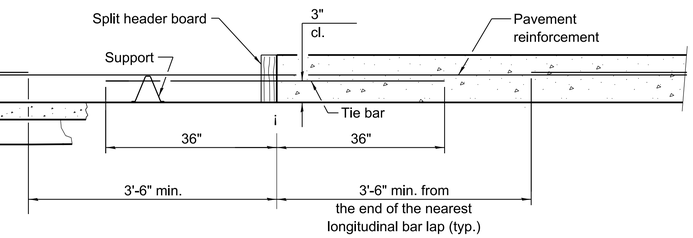

TRANSVERSE CONSTRUCTION JOINT

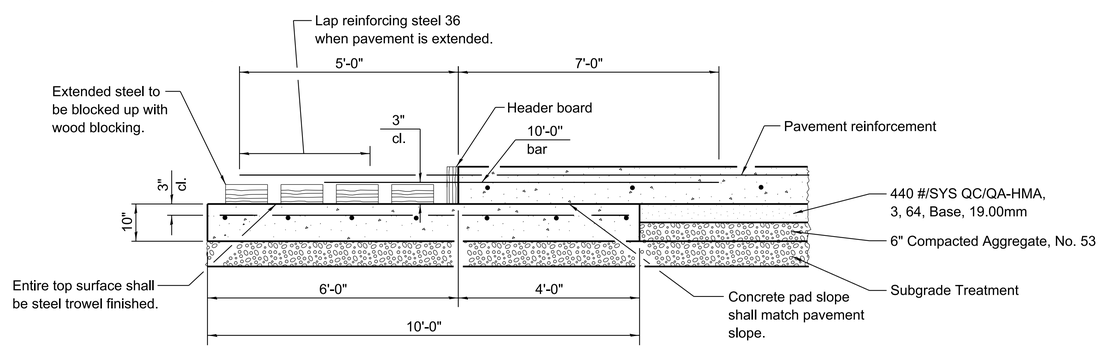

TRANSVERSE TERMINAL JOINT SECTION B-B

PARSONS
101 W. Ohio St., Suite 2121
Indianapolis, IN 46204
Bus (317) 616-1000
Fax (317) 616-1033

DRAFT
NOT FOR CONSTRUCTION

RECOMMENDED FOR APPROVAL _____ DESIGN ENGINEER DATE

DESIGNED: _____ DRAWN: _____

CHECKED: _____ CHECKED: _____

INDIANA
DEPARTMENT OF TRANSPORTATION

CRC PAVEMENT

HORIZONTAL SCALE	BRIDGE FILE
AS NOTED	TBD
VERTICAL SCALE	DESIGNATION
AS NOTED	TBD
SURVEY BOOK	SHEETS
ELECTRONIC	2 of 2
CONTRACT	PROJECT
B-36910	1600808

IP_PWP:dms38409\crc_pAVEMENT.dgn

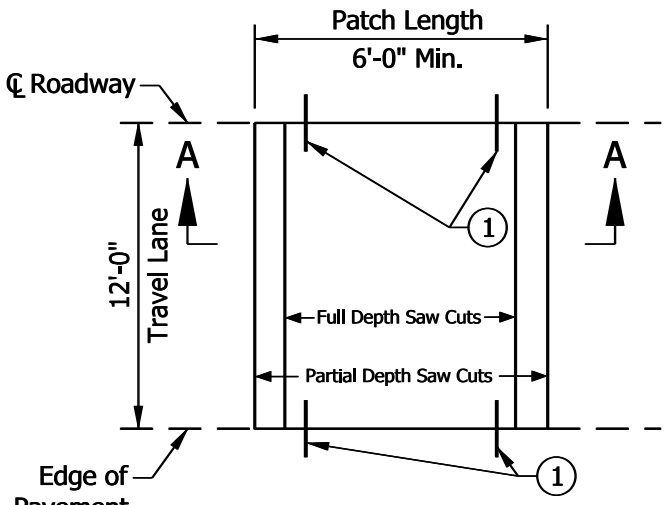

PLAN

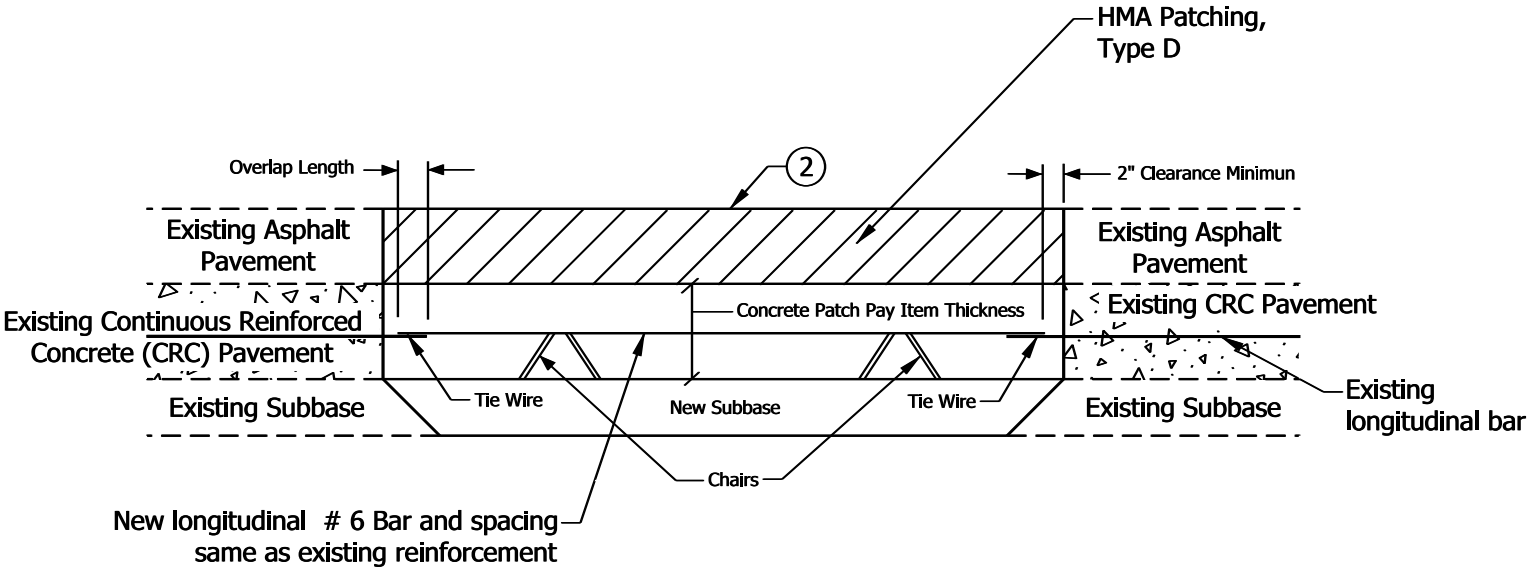

SECTION A-A
SUBBASE REMOVAL

NOTES:

1. Tie bar as specified. See Standard Drawing E 503-CCPJ-08 for Retrofit Tie Bar details.
2. For any subsequent overlay mill, then overlay with HMA Surface course.
3. Lap length for tying with new longitudinal steel will be from 25 to 30 times of the steel diameter.

DETAIL A
FULL-DEPTH PATCH (CRC/HMA) IN COMPOSITE PAVEMENT

INDEX	
SHEET NO.	SUBJECT
1	Joint Index and General Notes
2	Sawed Joints and Hot Pour Sealant
3	Transverse Construction Joint
4	Longitudinal Construction Joint

GENERAL NOTES:

1. Diameter of drilled holes shall be in accordance with the chemical anchor system manufacturer's instructuions.
2. Where standard drawings are referred to, the reference shall be to the versions included as Figure B through Figure L.

DETAIL B

INDIANA DEPARTMENT OF TRANSPORTATION

JOINT INDEX AND
GENERAL NOTES

SEPTEMBER 2020

STANDARD DRAWING NO. E 503-CCPJ-01

DESIGN STANDARDS ENGINEER DATE

CHIEF ENGINEER DATE

TYPE OF JOINT	DEPTH OF SAW CUT	DEPTH OF SEALANT
Longitudinal Joint	D/3	2" (min.)
D-1 Contraction Joint	D/3	2" (min.)
Retrofit Contraction Joint	1"	Bottom of Saw Cut
Retrofit Pressure Relief Joint	1"	Bottom of Saw Cut
Transverse Construction Joint	1"	Bottom of Saw Cut
Longitudinal Construction Joint	1"	Bottom of Saw Cut

D = PCCP Thickness

NOTES:

1. Multiple passes of sealant may be required.

(2) Backer rod shall not be installed.

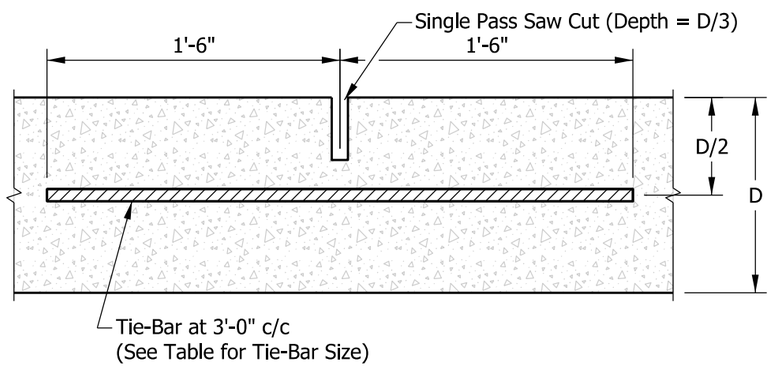

LONGITUDINAL JOINT
TRANSVERSE SECTION THROUGH PCCP

TIE-BAR SIZES FOR LONGITUDINAL JOINT	
Pavement Thickness, D	Tie-Bar Size
Less than or equal to 9"	#5
Greater than 9"	#6

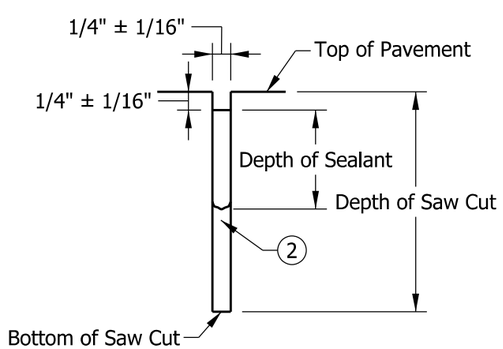

SAWED JOINT WITH HOT
POUR SEALANT

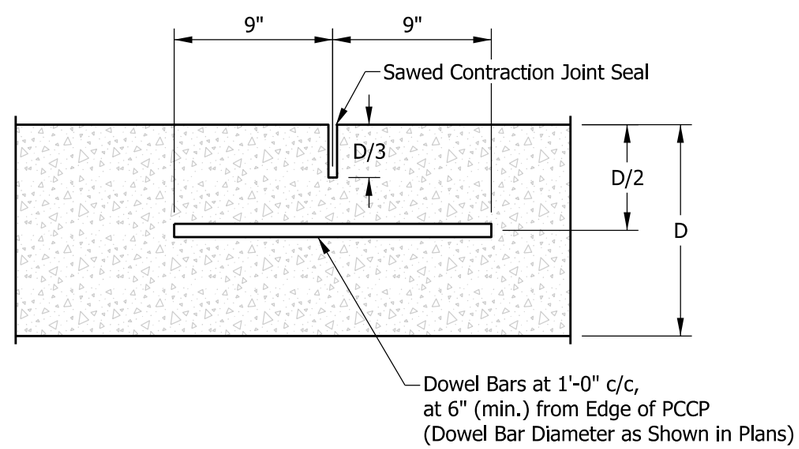

TYPE D-1 CONTRACTION JOINT
LONGITUDINAL SECTION THROUGH PCCP

DETAIL C

INDIANA DEPARTMENT OF TRANSPORTATION

SAWED JOINTS
AND
HOT POUR SEALANT
SEPTEMBER 2020

STANDARD DRAWING NO. E 503-CCPJ-02

DESIGN STANDARDS ENGINEER DATE

CHIEF ENGINEER DATE

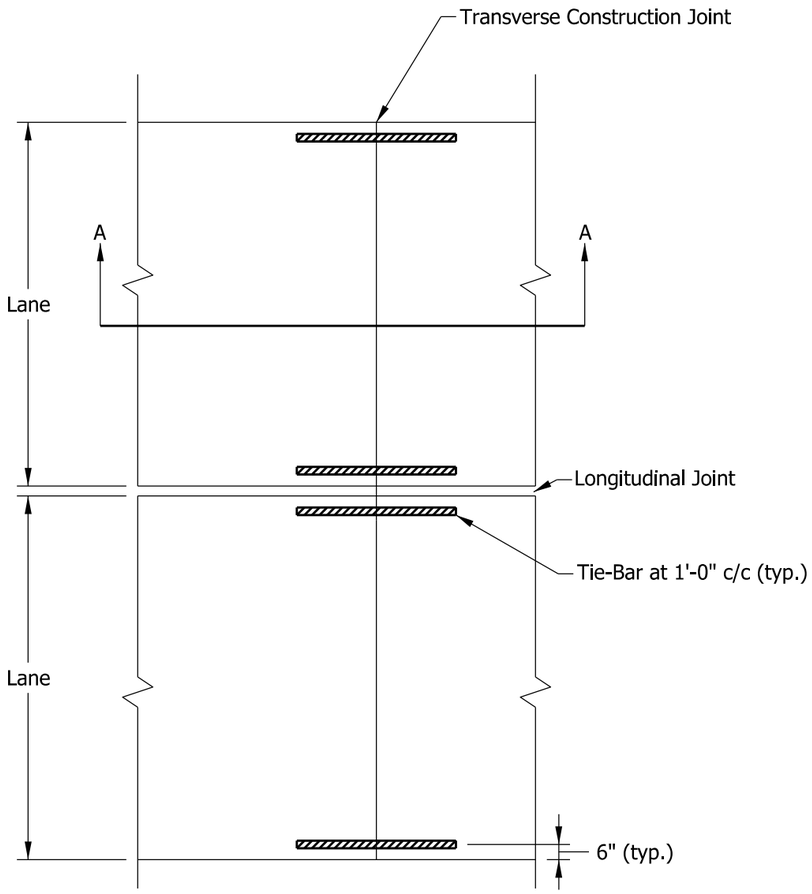

PLAN

TIE-BAR SIZES FOR TRANSVERSE CONSTRUCTION JOINT		
Pavement Thickness, D	Tie-Bar Size	Min. le
Less than 9"	#5	1'-0"
9" through 12"	#8	1'-8"
Greater than 12"	#10	2'-0"

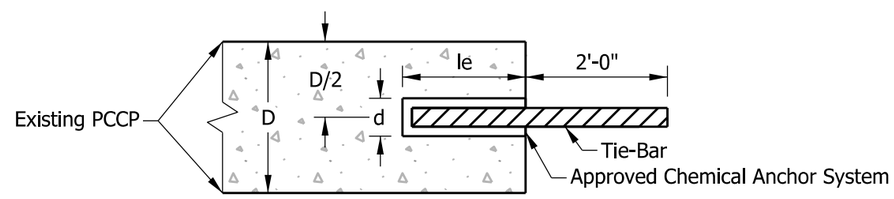

RETROFIT CONSTRUCTION TIE-BAR EMBEDMENT DETAIL

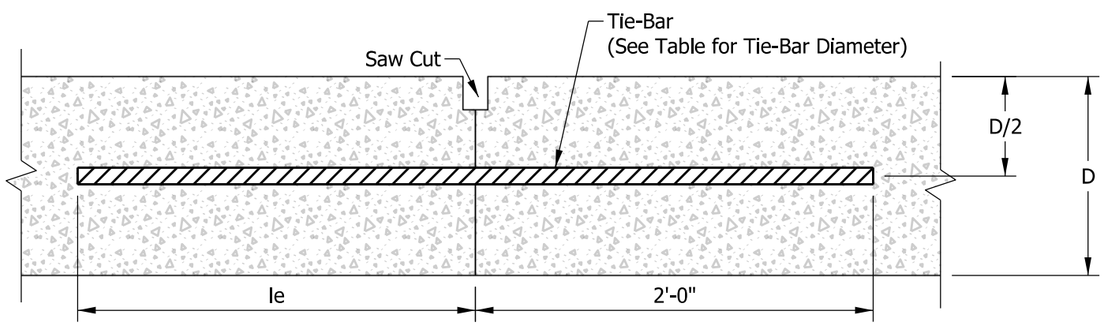

SECTION A-A

DETAIL D

INDIANA DEPARTMENT OF TRANSPORTATION

TRANSVERSE CONSTRUCTION JOINT

SEPTEMBER 2020

STANDARD DRAWING NO. E 503-CCPJ-03

DESIGN STANDARDS ENGINEER DATE

CHIEF ENGINEER DATE

NOTES:

1. Diameter of drilled hole (d) shall be in accordance with the chemical anchor system manufacturer's instructions.

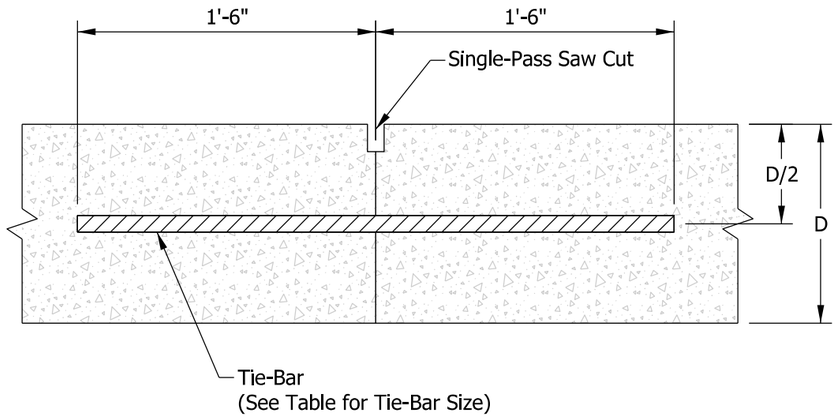

SECTION A-A

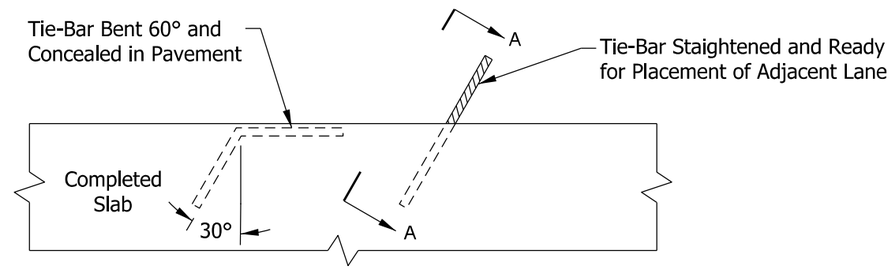

PLAN VIEW

METHOD OF PLACING TIE-BAR
FOR LONGITUDINAL CONSTRUCTION JOINT

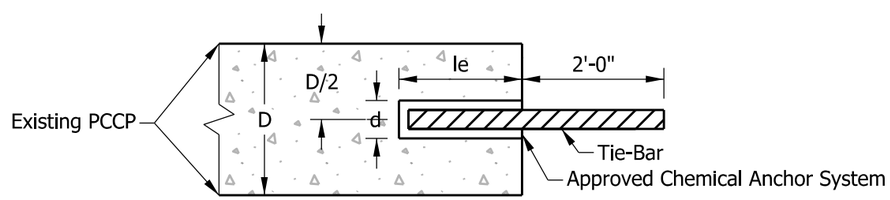

RETROFIT CONSTRUCTION TIE-BAR EMBEDMENT DETAIL

TIE-BAR SIZES FOR LONGITUDINAL CONSTRUCTION JOINT		
Pavement Thickness, D	Tie-Bar Size	Spacing
Less than 9"	#5	3'-0" c/c
9" through 12"	#6	3'-0" c/c
Greater than 12"	#6 or #7	2'-0" c/c 3'-0" c/c

PAVEMENT THICKNESS, D	LONGITUDINAL CONSTRUCTION JOINT RETROFIT TIE-BARS AT 3'-0" c/c	
	TIE-BAR SIZE	MIN. LENGTH OF EMBEDMENT, le
Less than or equal to 9"	#5	1'-0"
Greater than 9"	#6	1'-0"

DETAIL E

INDIANA DEPARTMENT OF TRANSPORTATION

LONGITUDINAL CONSTRUCTION JOINT

SEPTEMBER 2020

STANDARD DRAWING NO. E 503-CCPJ-04

DESIGN STANDARDS ENGINEER DATE

CHIEF ENGINEER DATE

INDEX

SHEET NO.	SUBJECT
1	Concrete Pavement Patching Drawing Index and General Notes
2	Joint Details and Joint Placement
3	Patch Lengths ≥ 6' ≤ 15'
4	Patch Lengths > 15' ≤ 60'
5	Patch Lengths > 60'
6	Dowel Bar Placement Tolerance

GENERAL NOTES:

1. Additional preparation of existing subgrade will be determined by the Engineer.
2. For existing PCCP thickness 10 in. or less, 1 in. dowel bars shall be used. For PCCP thickness 10 in. or more, 1.5 in. dowel bars shall be used.
3. Regardless of the diameter of the dowel bar, length shall be 1 ft 2 in. minimum and 1 ft 6 in. maximum.
4. Sawing and sealing of joints shall be omitted if PCCP is to be overlaid.
5. If existing JRCP is encountered, dowel bars may have to be relocated lower to avoid existing steel reinforcement. Minimum cover below dowel bar shall be 3 in. Location will be determined by the Engineer.
6. Maximum panel length for patches is 15 ft.
7. A patch shall not be tied to two consecutive existing panels.
8. See Standard Drawing E 503-CCPJ-02 for D-1 contraction joint and joint seal details.
9. See Standard Drawing E 503-CCPJ-04 for retrofit tie-bar details.
10. Where standard drawings are referred to, the reference shall be to the versions included as Figure B through Figure L.

DETAIL F

INDIANA DEPARTMENT OF TRANSPORTATION

CONCRETE PAVEMENT PATCHING
DRAWING INDEX AND GENERAL NOTES

SEPTEMBER 2020

STANDARD DRAWING NO. E 506-CCPP-01

DESIGN STANDARDS ENGINEER DATE

CHIEF ENGINEER DATE

RETROFIT PRESSURE RELIEF JOINT

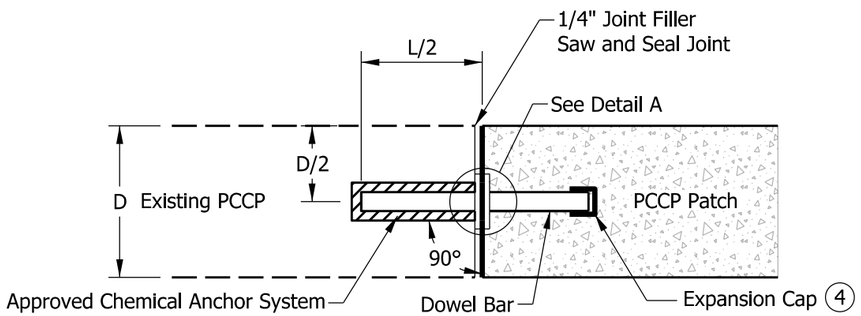

RETROFIT CONTRACTION JOINT

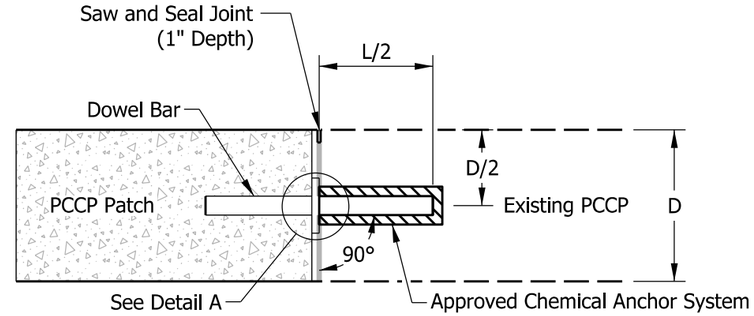

PCCP

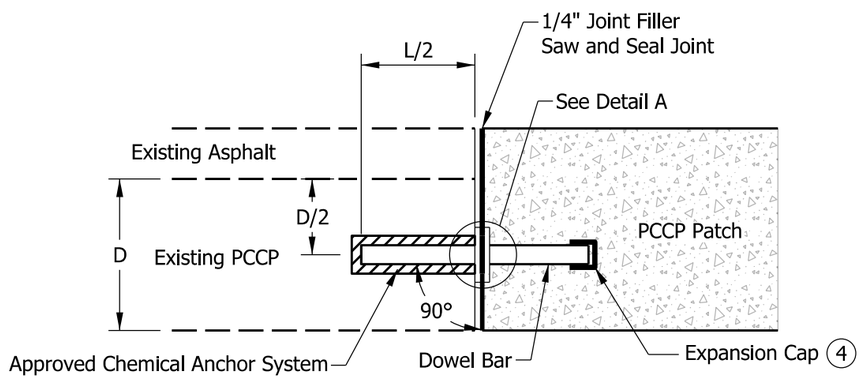

PCCP

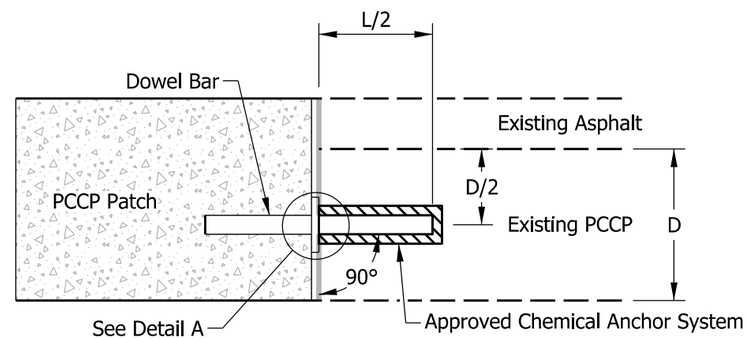

COMPOSITE PAVEMENT

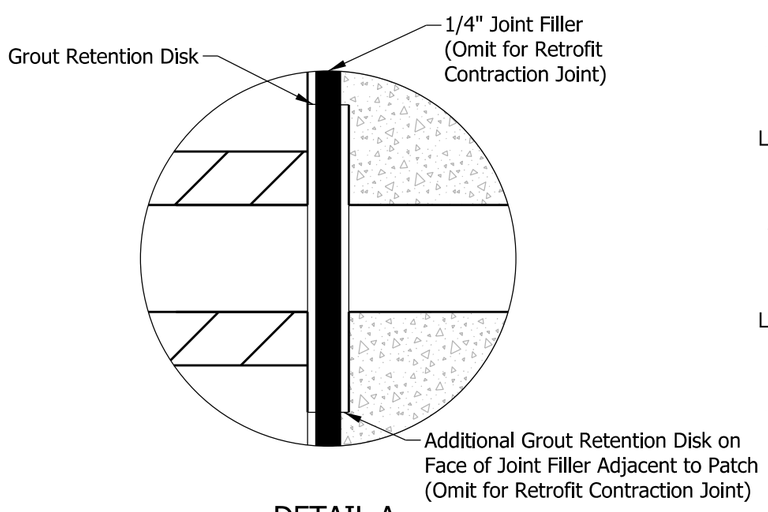

DETAIL A

Retrofit Pressure Relief Joint Shown
Retrofit Contraction Joint Same by Opposite Hand

COMPOSITE PAVEMENT

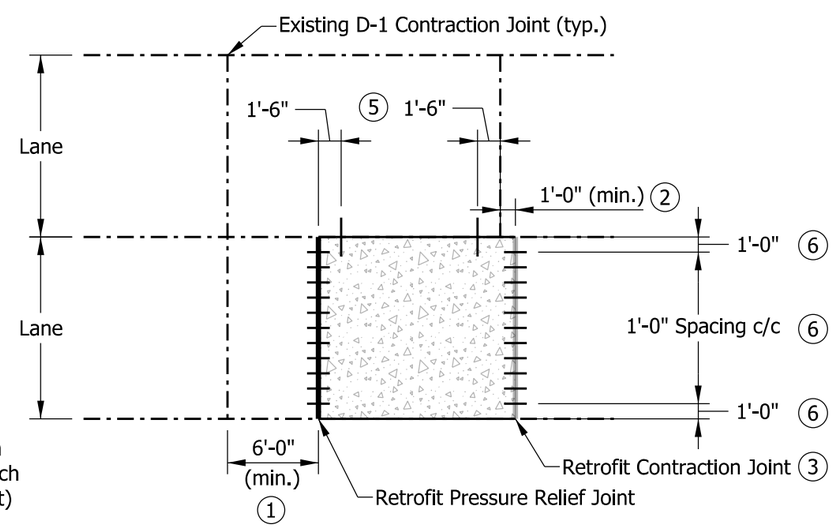

JOINT PLACEMENT PLAN

NOTES:

1. Retrofit Pressure Relief Joint and Retrofit Contraction Joint shall be placed a minimum of 6 ft from an existing D-1 Contraction Joint in line with the patch.
2. Retrofit Pressure Relief Joints and Retrofit Contraction Joints shall be placed a minimum of 1 ft from an existing D-1 Contraction Joint in an adjacent panel.
3. Where the total patch length exceeds 60 ft, a Retrofit Pressure Relief Joint shall be used in lieu of the Retrofit Contraction Joint.
4. Expansion cap shall be placed with a gap of 1/4 in. minimum between end of dowel bar and cap.
5. Retrofitted Tie-Bars as required.
6. Where the width of the patch does not allow for the dowel spacing as shown, the Engineer shall be be notified.

LEGEND

D = Existing PCCP Thickness
L = Dowel Bar Length

DETAIL G

INDIANA DEPARTMENT OF TRANSPORTATION

JOINT DETAILS AND JOINT PLACEMENT

SEPTEMBER 2020

STANDARD DRAWING NO. E 506-CCPP-02

DESIGN STANDARDS ENGINEER DATE

CHIEF ENGINEER DATE

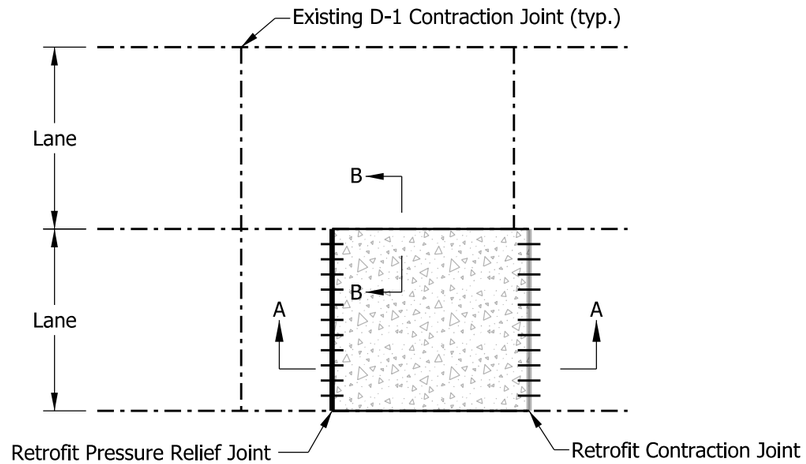

PLAN

(Applicable for Existing D-1 Spacing at 18' or 20')

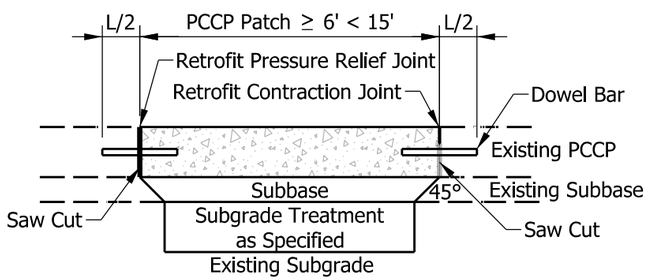

PCCP
SECTION A-A

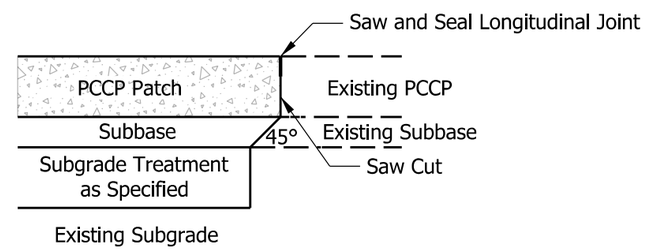

PCCP
SECTION B-B

LEGEND

D = Existing PCCP Thickness
L = Dowel Bar Length

DETAIL H

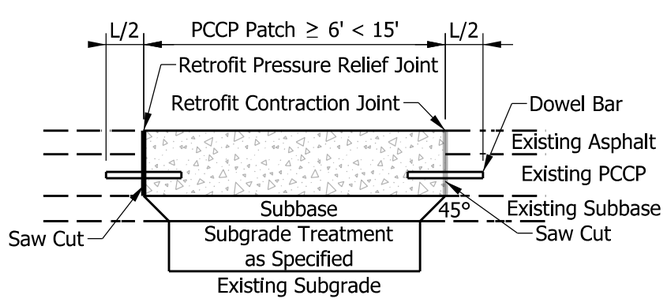

COMPOSITE PAVEMENT
SECTION A-A

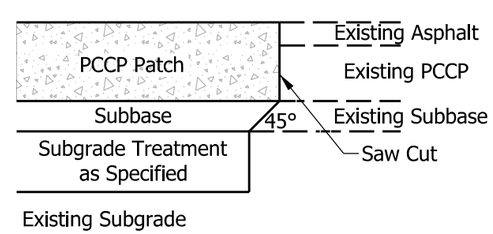

COMPOSITE PAVEMENT
SECTION B-B

INDIANA DEPARTMENT OF TRANSPORTATION

PATCH LENGTH ≥ 6' ≤ 15'

SEPTEMBER 2020

STANDARD DRAWING NO. E 506-CCPP-03

DESIGN STANDARDS ENGINEER DATE

CHIEF ENGINEER DATE

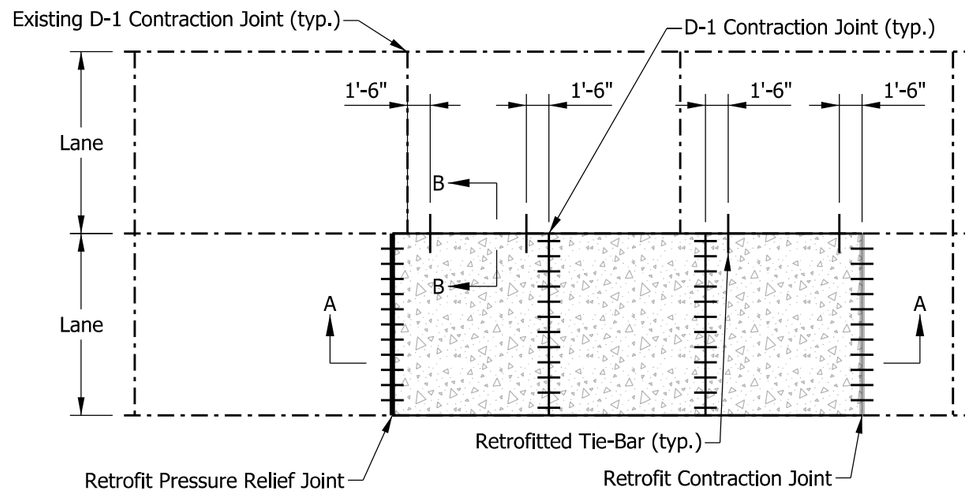

PLAN

(Applicable for Existing D-1 Spacing at 15', 16', 18', or 20')

NOTES:

1. D-1 contractin joints shall be spaced at 15 ft. Where 15 ft spacing results in the last panel being less than 6 ft in length, the last D-1 spacing shall be adjusted to create two equal panel lengths greater than 6 ft.
2. Retrofitted tie-bars shall be placed in every other panel as shown.
3. Retrofit tie-bars shall be used only where adjacent shoulder or lane is PCCP or composite pavement.

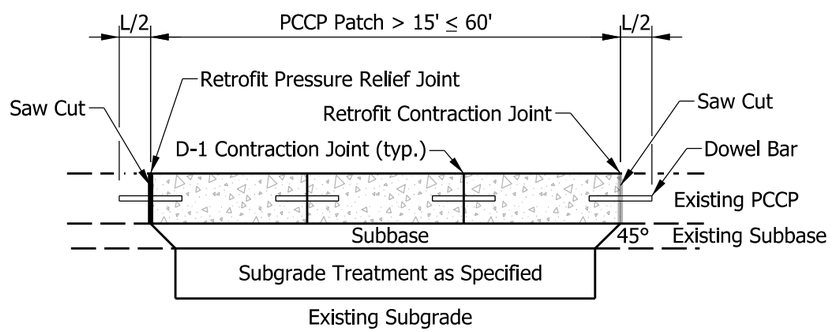

PCCP
SECTION A-A

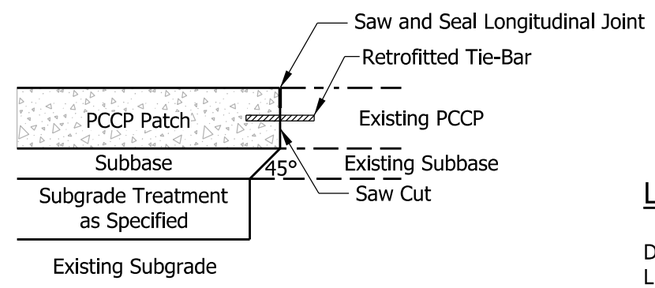

PCCP
SECTION B-B

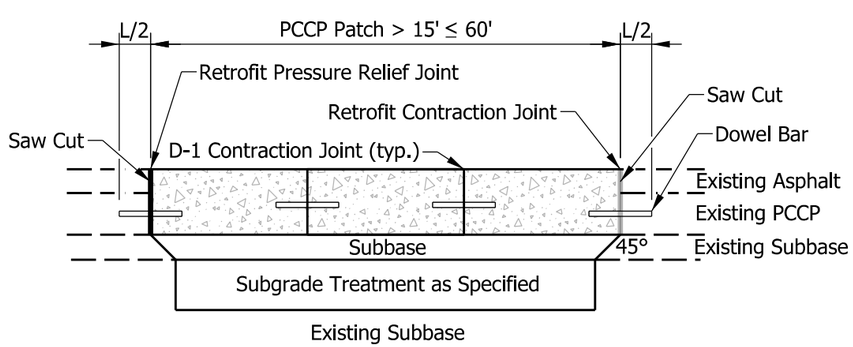

COMPOSITE PAVEMENT
SECTION A-A

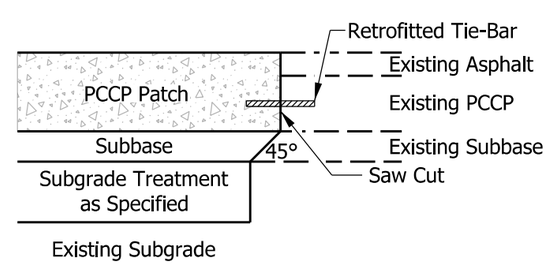

COMPOSITE PAVEMENT
SECTION B-B

LEGEND

D = Existing PCCP Thickness
L = Dowel Bar Length

DETAIL I

INDIANA DEPARTMENT OF TRANSPORTATION

PATCH LENGTH > 15' ≤ 60'

SEPTEMBER 2020

STANDARD DRAWING NO. E 506-CCPP-04

DESIGN STANDARDS ENGINEER DATE

CHIEF ENGINEER DATE

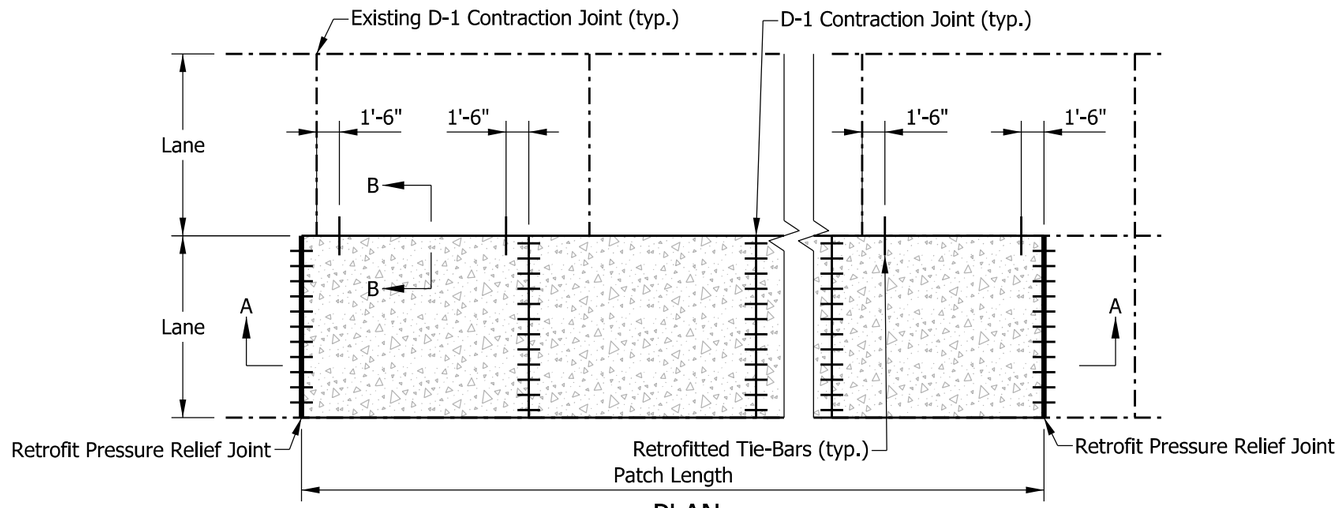

PLAN

(Applicable for Existing D-1 Spacing at 15', 16', 18', or 20')

NOTES:

1. D-1 contractin joints shall be spaced at 15 ft. Where 15 ft spacing results in the last panel being less than 6 ft in length, the last D-1 spacing shall be adjusted to create two equal panel lengths greater than 6 ft.
2. Retrofitted tie-bars shall be placed in every other panel as shown.
3. Retrofit tie-bars shall be used only where adjacent shoulder or lane is PCCP or composite pavement.

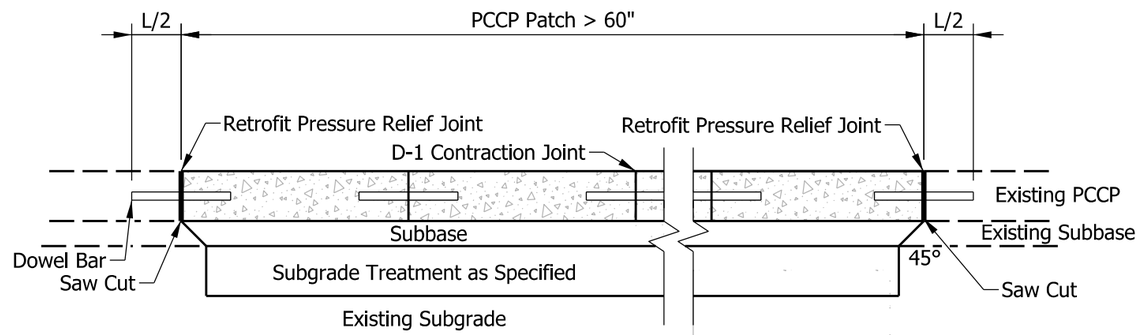

PCCP
SECTION A-A

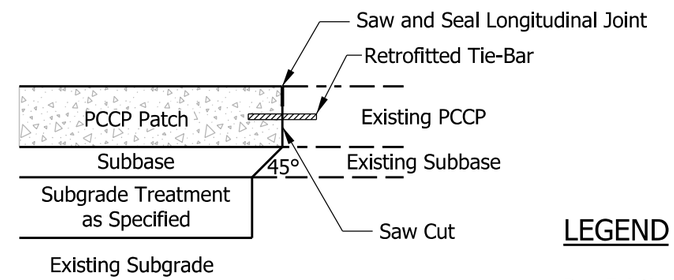

PCCP
SECTION B-B

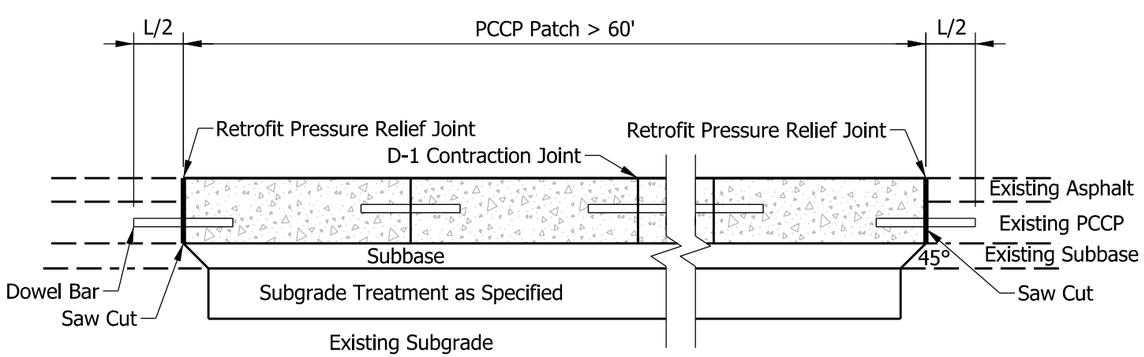

COMPOSITE PAVEMENT
SECTION A-A

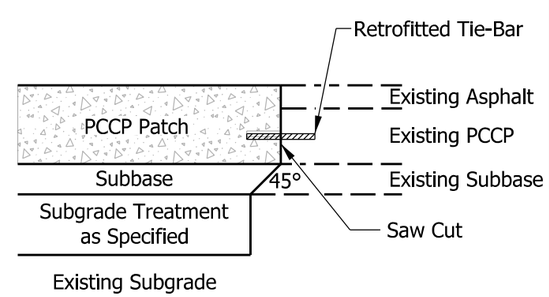

COMPOSITE PAVEMENT
SECTION B-B

LEGEND

D = Existing PCCP Thickness
L = Dowel Bar Length

DETAIL J

INDIANA DEPARTMENT OF TRANSPORTATION

PATCH LENGTH > 60'

SEPTEMBER 2020

STANDARD DRAWING NO. E 506-CCPP-05

DESIGN STANDARDS ENGINEER DATE

CHIEF ENGINEER DATE

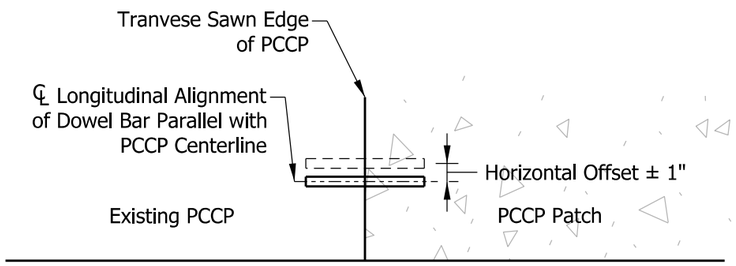

PLAN
HORIZONTAL TRANSLATION

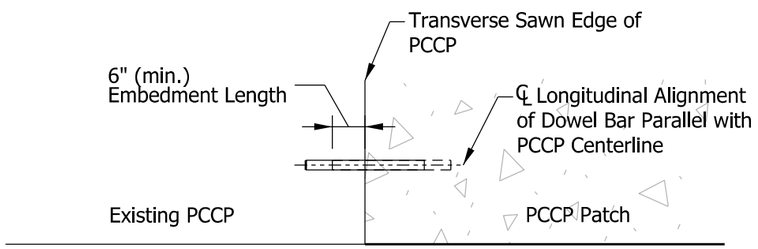

PLAN
LONGTITUDINAL TRANSLATION

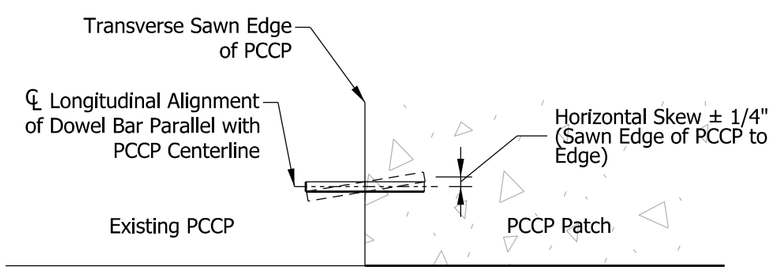

PLAN
HORIZONTAL SKEW

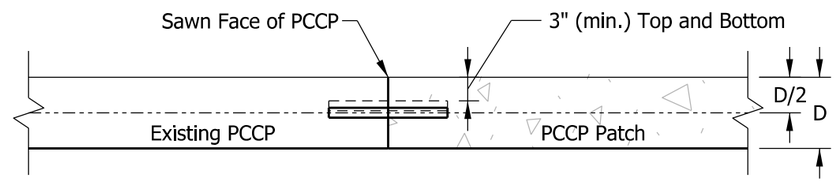

ELEVATION
VERTICAL TRANSLATION

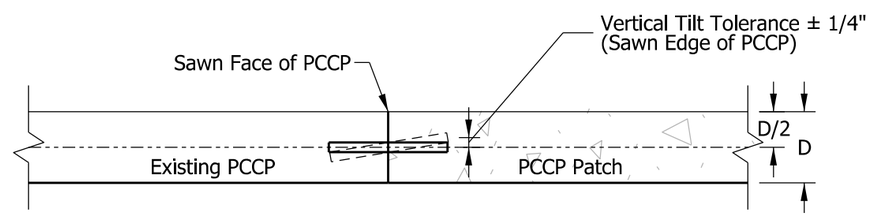

ELEVATION
VERTICAL TILT

LEGEND

D = Existing PCCP Thickness
Mis-Aligned Dowel Bar
Properly Aligned Dowel Bar

DETAIL K

INDIANA DEPARTMENT OF TRANSPORTATION

DOWEL BAR PLACEMENT TOLERANCES

SEPTEMBER 2020

STANDARD DRAWING NO. E 506-CCPP-06

DESIGN STANDARDS ENGINEER DATE

CHIEF ENGINEER DATE

DETAIL L
to be determined

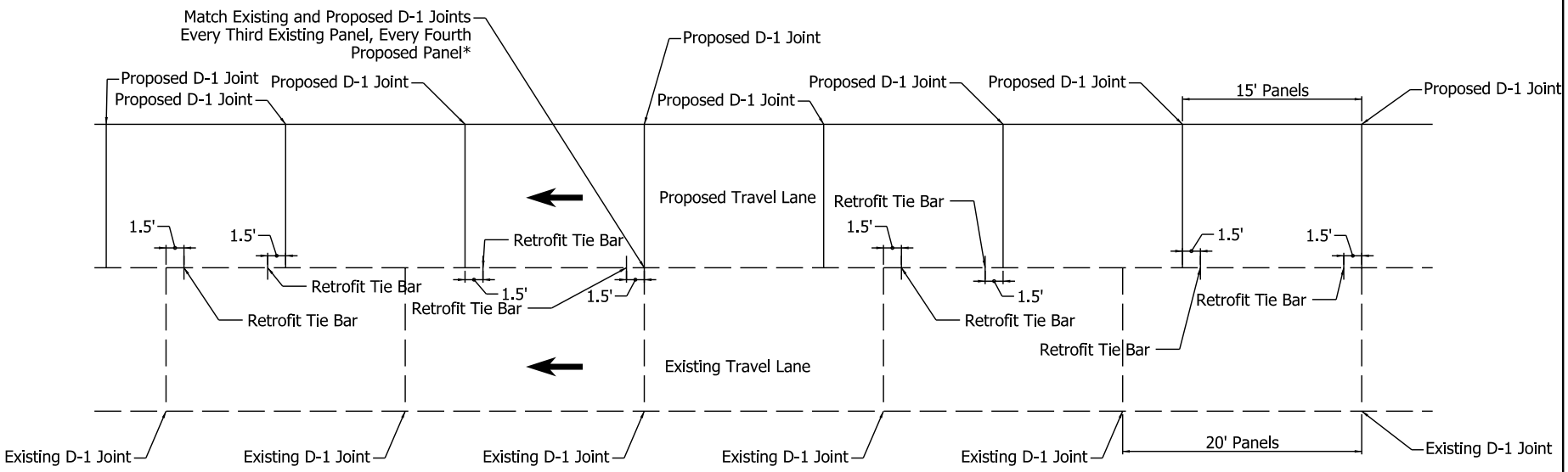

* Refer to Detail C for Retrofit Tie Bar Details

PARSONS
101 W. Ohio St., Suite 2121
Indianapolis, IN 46204
Bus (317) 616-1000
Fax (317) 616-1033

pw:\\VANVA01PWINT01.parsons.com:Indiana State/Documents/Greenfield/On Call 2018/Assignment 13 - I-465 Reconfiguration/CADD/Pavement Design/Added Travel Lane Joint Detail.dgn

RECOMMENDED FOR APPROVAL _____ DESIGN ENGINEER DATE	INDIANA DEPARTMENT OF TRANSPORTATION	HORIZONTAL SCALE 1" = 50'	BRIDGE FILE N/A
		VERTICAL SCALE N/A	DESIGNATION 1802075
DESIGNED: TJK / DRAWN: TJK	I-465 SEGMENT C PCCP JOINT SPACING DETAIL DETAIL M	SURVEY BOOK N/A	SHEETS 1 of 1
CHECKED: MAT / CHECKED: MAT		CONTRACT	PROJECT

INERTIAL PROFILER FOR PCCP

The Standard Specifications are revised as follows:

SECTION 501, DELETE LINES 375 THROUGH 483.

SECTION 501, AFTER LINE 483, INSERT AS FOLLOWS:

501.25 Pavement Smoothness

Pavement smoothness will be accepted by means of an inertial profiler, a 16 ft long straightedge, or a 10 ft long straightedge as described below.

(a) Inertial Profiler

When a pay item for Inertial Profiler, PCCP is included in the contract, the Design-Build Contractor shall furnish, calibrate, and operate an approved inertial profiler in accordance with ITM 917 for the acceptance of longitudinal smoothness on the mainline traveled way and ramps, including adjacent acceleration or deceleration lane, where both of the following conditions are met:

1. *The design speed is greater than 45 mph.*
2. *The traveled way or ramp lane width and slope are constant and is 0.1 mi in length or longer.*

The profiles International Roughness Index, IRI, results including smoothness histograms and areas of localized roughness, and fixed interval IRI results shall become the property of the INDOT. The inertial profiler shall remain the property of the Design-Build Contractor.

The paving exceptions and areas exempt from inertial profiler operation shall be in accordance with ITM 917.

If the posted speed limit for an entire smoothness section is less than or equal to 45 mph, the section will be exempt from inertial profiler operation and the smoothness within the section will be accepted by a 16 ft straightedge.

If the posted speed limit is greater than 45 mph for a portion of a smoothness section and is less than or equal to 45 mph for the remainder, the section smoothness acceptance will be as follows:

1. *By inertial profiler for the portion of the section with a posted speed limit greater than 45 mph.*
2. *In accordance with 501.25(c) for the portion of the section with a posted speed limit less than or equal to 45 mph.*

At locations where the inertial profiler is required, all high or low point deviations with an IRI greater than 150 in./mile, utilizing a 25 ft window, shall be corrected. Corrections shall be made in accordance with 501.25(d).

(b) Blank

(c) 16 ft Straightedge and 10 ft Straightedge

INDOT will furnish and operate 16 ft and 10 ft straightedges as described below. The 16 ft straightedge is used to accept smoothness along the direction of mainline traffic and the 10 ft straightedge is used to accept smoothness transverse to the direction of mainline traffic. This includes longitudinal smoothness on public road approaches and median crossovers.

For contracts which include the Inertial Profiler, PCCP pay item, the 16 ft long straightedge will be used to accept longitudinal smoothness at the following locations:

1. *All mainline traveled way lanes shorter than 0.1 mi.*
2. *All mainline traveled way lanes at locations exempted from inertial profiler operation in accordance with ITM 917.*
3. *All tapers.*
4. *All turn lanes, including bi-directional left turn lanes shorter than 0.1 mi.*
5. *All acceleration and deceleration lanes associated with ramps with design speeds of 45 mph or less and shorter than 0.1 mi.*
6. *All shoulders.*

For contracts where the inertial profiler is not used for smoothness acceptance, the 16 ft straightedge will be used to accept longitudinal smoothness at the above locations and on all mainline traveled way lanes and ramps with design speeds greater than 45 mph. Smoothness acceptance on ramp acceleration or deceleration lanes will also be based on the 16 ft straightedge.

The 10 ft long straightedge shall be used for transverse slopes, approaches, and crossovers.

As soon as the PCCP has cured sufficiently, the smoothness may be checked. INDOT may direct that the pavement profile be evaluated within 24 h following placement. When profile testing is consistently outside pavement surface tolerances the paving operation shall be discontinued until an amended QCP is submitted.

(d) Smoothness Correction

Pavement smoothness variations outside specified tolerances shall be corrected by grinding with a groove type cutter or by replacement. Grinding will not be allowed until the PCCP is 10 days old or the flexural strength test is 550 psi or greater. The grinding of the pavement to correct the profile shall be accomplished in either the longitudinal or the

transverse direction. The PCCP texture after grinding shall be uniform. If the grinding operation reduces the tining grooves to a depth of less than 1/16 in. and the longitudinal length of the removal area exceeds 15 ft, or two or more areas are within 30 ft of each other, the PCCP shall be re-textured in accordance with 504.03.

At locations where the inertial profiler is used, all areas having a localized roughness in excess of 150 in./mi. in 25 ft window shall be corrected. The width of the corrected area may be partial or full lane width, depending on the respective wheel path profiles. After the corrective action is complete, the inertial profiler shall be operated throughout the entire affected smoothness section to verify the adequacy of the corrective action.

At locations where the 16 ft straightedge is used, the pavement variations shall be corrected to 1/4 in. or less. At locations where the 10 ft straightedge is used, the pavement variations shall be corrected to 1/8 in. or less.

SECTION 501, DELETE LINES 619 THROUGH 648.

SECTION 501, AFTER LINE 648, INSERT AS FOLLOWS:

(e) Smoothness

Design-Build Contractor shall produce a finished profile that has an average International Roughness Index (IRI) of 60 in./mi. or less for each pavement section of 300 feet. Depressed pavement areas due to subsidence or other localized causes are excluded from the smoothness requirements. These areas will be reviewed and approved by the Engineer. Corrections shall be made in accordance with 501.25(d).

SECTION 501, BEGIN LINE 716, DELETE AND INSERT AS FOLLOWS:

501.31 Basis of Payment

The accepted quantities of QC/QA-PCCP will be paid for at the contract unit price per square yard for the thickness specified, complete in place.

Payment for furnishing, calibrating, and operating the ~~profilograph~~*inertial profiler*, and furnishing ~~profile~~*IRI* information will be made at the contract lump sum price for ~~profilograph~~*inertial profiler*, PCCP.

SECTION 501, BEGIN LINE 743, DELETE AND INSERT AS FOLLOWS:

~~Profilograph~~*Inertial Profiler*, PCCP .....LS

SECTION 501, BEGIN LINE 749, DELETE AND INSERT AS FOLLOWS:

The price of ~~profilograph~~*Inertial Profiler*, PCCP will be full compensation regardless of how often the ~~profilograph~~*inertial profiler* is used or how ~~many profilograms are produced~~*often the IRI is determined*.

SECTION 502, BEGIN LINE 364, DELETE AND INSERT AS FOLLOWS:

502.20 Pavement Smoothness

~~Pavement smoothness will be in accordance with 501.25 except profilograph requirements will not apply.~~ *A straightedge in accordance with 508.09(d) and (e) will be used to determine smoothness. The 16 ft straightedge will be used to accept smoothness along the direction of mainline traffic and the 10 ft straightedge will be used to accept*

smoothness transverse to the direction of mainline traffic. Smoothness correction shall be in accordance with 501.25(d).

INERTIAL PROFILER FOR HMA

The Standard Specifications are revised as follows:

SECTION 401, DELETE LINES 556 THROUGH 668.

SECTION 401, AFTER LINE 668, INSERT AS FOLLOWS:

401.18 Pavement Smoothness

Pavement smoothness will be accepted by means of an inertial profiler, a 16 ft long straightedge, or a 10 ft long straightedge as described below. The 10 ft long straightedge will be used to check transverse slopes, across travel lanes and shoulders, approaches, and crossovers. When the 10 ft straightedge is used, the pavement variations shall be corrected to 1/8 in. or less.

(a) Inertial Profiler

When a pay item for Inertial Profiler, HMA is included in the contract, the Contractor shall furnish, calibrate, and operate an approved inertial profiler in accordance with ITM 917 on the mainline traveled way, including adjacent acceleration or deceleration lanes, where all of the following conditions are met:

1. *The posted speed is greater than 45 mph.*

2. *The traveled way width and slope are constant and is at least 0.1 mi in length.*

3. *The HMA is placed on a milled surface and the planned lay rate for a single lift is 165 lb/sq yd or greater, or the total combined planned lay rate of surface, intermediate, and base courses is 385 lb/sq yd or greater.*

The profiles, International Roughness Index, IRI, results including areas of localized roughness, and fixed interval IRI results produced shall become the property of the Department. The inertial profiler shall remain the property of the Contractor.

The paving exceptions and areas exempt from inertial profiler operation will be in accordance with ITM 917.

If the posted speed limit for an entire smoothness section is less than or equal to 45 mph, the section will be exempt from IRI operation and the smoothness within the section will be accepted in accordance with 401.18(b).

If the posted speed limit is greater than 45 mph for a portion of a smoothness section and is less than or equal to 45 mph for the remainder, the section smoothness acceptance will be as follows:

1. *By inertial profiler for the portion of the section with a posted speed limit greater than 45 mph.*

2. *In accordance with 401.18(b) for the portion of the section with a posted speed limit less than or equal to 45 mph.*

At locations where the inertial profiler is required, it shall be used on the surface course and on any dense graded intermediate course immediately below the surface course.

(b) 16 ft Straightedge

The Contractor shall furnish and operate 16 ft straightedges as described below. The 16 ft straightedge is used to accept smoothness along the direction of mainline traffic.

For contracts which include the Inertial Profiler, HMA pay item, the 16 ft long straightedge or the Inertial Profiler simulating the 16 ft long straightedge shall be used to accept longitudinal smoothness on surface courses at the following locations:

1. *All mainline traveled way lanes shorter than 0.1 mi.*

2. *All mainline traveled way lanes at locations exempted from inertial profiler operation in accordance with ITM 917.*

3. *All mainline traveled way lanes within smoothness sections with posted speed limits less than or equal to 45 mph throughout the entire section length.*

4. *All tapers.*

5. *All ramps.*

6. *All turn lanes, including bi-directional left turn lanes shorter than 0.1 mi.*

7. *All acceleration and deceleration lanes associated with ramps with posted speeds of 45 mph or less.*

8. *All shoulders.*

For contracts where the inertial profiler is not used for smoothness acceptance, the 16 ft straightedge will be used to accept longitudinal smoothness on all dense graded courses at the above locations as well as all mainline travel way lanes and ramps with posted speeds of greater than 45 mph. Smoothness acceptance on ramp acceleration or deceleration lanes will also be based on operation of the 16 ft straightedge.

(c) Smoothness Correction

At locations where the inertial profiler is being used on an intermediate course, all areas having a localized roughness in excess of 150 in./mi utilizing continuous IRI with a 25 ft window shall be corrected subject to review by the Engineer. The width of the

corrected area may be partial or full lane width, depending on the respective wheel path profiles. After corrective action is taken on an intermediate course, a 16 ft straightedge or inertial profiler may be used to verify the adequacy of the corrective action.

At locations where the inertial profiler is being used on a surface course, all areas having a localized roughness in excess of 150 in./mile utilizing continuous IRI with a 25 ft window shall be corrected subject to review by the Engineer. The width of the corrected area may be partial or full lane width, depending on the respective wheel path profiles. Underlying courses that are exposed by corrective action shall be milled to a depth of 1 1/2 in. and replaced with surface course. After the corrective action is taken on a surface course, the inertial profiler shall be operated throughout the entire affected smoothness section to verify the adequacy of the corrective action.

At locations where the 16 ft straightedge is used, the pavement variations shall be corrected to 1/4 in. or less.

If grinding of an intermediate course is used for pavement smoothness corrections, the grinding shall not precede the surface placement by more than 30 calendar days if open to traffic.

SECTION 401, DELETE LINES 761 THROUGH 797.

SECTION 401, AFTER LINE 797, INSERT AS FOLLOWS:

(c) Smoothness

The Contractor shall produce a finished profile that has an average International Roughness Index (IRI) of 60 in./mi. or less for each pavement section of 300 feet. Depressed pavement areas due to subsidence or other localized causes are excluded from the smoothness requirements. These areas will be reviewed and approved by the Engineer. Corrections shall be made in accordance with 401.18(c).

SECTION 401, BEGIN LINE 870, DELETE AND INSERT AS FOLLOWS:

401.22 Basis of Payment

The accepted quantities for this work will be paid for at the contract unit price per ton for QC/QA-HMA, of the type specified, complete in place.

Payment for furnishing, calibrating, and operating the ~~profilograph~~*inertial profiler*, and furnishing profile information will be made at the contract lump sum price for ~~profilograph~~*inertial profiler*, HMA.

Adjustments to the contract payment with respect to mixture, density, and smoothness for *the* mixture produced will be included in a quality adjustment pay item in accordance with 109.05.1.

SECTION 401, BEGIN LINE 894, DELETE AND INSERT AS FOLLOWS:

~~Profilograph~~*Inertial Profiler*, HMA.....LS

SECTION 401, BEGIN LINE 919, DELETE AND INSERT AS FOLLOWS:

The price for ~~Profilograph~~*Inertial Profiler*, HMA will be full compensation regardless of how often the ~~profilograph~~*inertial profiler* is used or how ~~many profilograms are produced~~ *often the IRI is determined.*

SECTION 402, BEGIN LINE 341, DELETE AND INSERT AS FOLLOWS:

402.18 Pavement Smoothness

~~Pavement smoothness will be in accordance with 401.18 except profilograph~~*~~inertial profiler~~* ~~requirements will not apply.~~ *A straightedge in accordance with 409(f)2 and 409(f)3 will be used to determine smoothness. The 16 ft straightedge will be used to accept smoothness along the direction of mainline traffic and the 10 ft straightedge will be used to accept smoothness transverse to the direction of mainline traffic. Smoothness correction shall be in accordance with 401.18(c).*

PREFORMED PLASTIC MARKINGS

The Standard Specifications are revised as follows:

SECTION 808.07, BEGIN LINE 284, INSERT AS FOLLOWS:

(b) Durable Pavement Marking Material

Durable pavement marking material consists of thermoplastic, preformed plastic or multi-component markings. Durable pavement marking materials used for center lines, lane lines, or edge lines shall be installed within a groove in the pavement unless otherwise shown on the plans. Durable pavement marking materials used for barrier lines, pavement message, and transverse markings shall be surface applied unless otherwise indicated on the plans.

Durable pavement marking materials used for center lines, lane lines, or edge lines on this Contract shall be wet-reflective preformed plastic markings. Material application shall be in accordance with manufacturer recommendations. The cost of the wet-reflective elements in the preformed plastic shall be included in the cost of the markings. The wet reflective preformed plastic marking shall be chosen from the following manufacturers:

(a) Stamark High Performance Tape Series 380 AW by 3M Company, St. Paul MN

(b) Approved Equal

The wet retro-reflectivity of the preformed plastic markings may be measured by the Department in accordance with ASTM E 2177. The testing period will be not less than 14 days to not more than 30 days after the materials are applied. The initial wet retro-reflectivity of the preformed plastic markings shall be a minimum of 275 mcd/lux/m^2 for white markings and a minimum of 175 mcd/lux/m^2 for yellow markings when tested in accordance with ASTM E 2177.

A type C certification in accordance with 916 shall be furnished for the wet reflective preformed plastic markings.

CONTRAST LANE LINES

The Standard Specifications are revised as follows:

SECTION 808.04, BEGIN LINE 52, DELETE AND INSERT AS FOLLOWS:

808.04 Longitudinal Markings and Milled Corrugations

All longitudinal lines shall be clearly and sharply delineated, straight and true on tangent, and form a smooth curve where required. Lines shall be square at both ends, without mist, drip or spatter.

A solid line shall be continuous. A broken line shall consist of 10 ft line segments with 30 ft gaps *on HMA pavement. On PCCP, a broken line shall consist of 20 ft line segments with the first 10 ft white in color and the last 10 ft black in color and 20 ft gaps between segments.* A dotted line shall consist of 3 ft line segments with 9 ft gaps unless otherwise indicated on the

plans *on HMA pavement. On PCCP, a dotted line shall consist of 6 ft line segments with the first 3 ft white in color and the last 3 ft black in color and 6 ft gaps between segments.*

SECTION 808.04, BEGIN LINE 97, DELETE AND INSERT AS FOLLOWS:

(b) Lane Lines

Lane lines shall be used to separate lanes of traffic moving in the same direction. Normal width lane line markings *on HMA pavement* shall be white in color and shall be 5 in. wide on interstates and freeways, and 4 in. wide on all other roads. *Normal width lane line markings on PCCP shall be of preformed plastic material, white and black in color, and shall be 5 in. wide on interstates and freeways, and 4 in wide on all other roads*. Lane lines shall be offset 4 in. to the right of longitudinal pavement joints or divisions between traffic lanes. Wide lane lines for lane drops, route splits, or auxiliary lanes *on HMA pavement* shall be white in color and shall be 8 in. wide. *Wide lane lines for lane drops, route splits, or auxiliary lanes on PCCP shall be white and black in color and shall be 8 in. wide.* White solid lines shall be used to mark lane lines only when specified or directed.

(c) Edge Lines

Edge lines shall be used to outline and separate the edge of pavement from the shoulder. Edge line markings *on HMA pavement* shall be 4 in. in width. *Edge line markings on PCCP shall be of preformed plastic material and 6 in. in width with an additional 1.5 in. to 2 in. of black contrast markings on each side for a total width of 9 in. to 10 in. The edge lines* ~~and~~ shall be placed such that the edge of the marking nearest the edge of the pavement shall be offset 4 in. from the edge of the pavement except as otherwise directed. Right edge lines shall be marked with a white solid line and left edge lines shall be marked with a yellow solid line.

PAVEMENT MESSAGE MARKINGS

[This is a proprietary special provision and requires a public interest finding]

The Standard Specifications are revised as follows:

SECTION 808.05, BEGIN LINE 147, INSERT AS FOLLOWS:

(b) Pavement Message Markings

Pavement message markings shall be used as specified or directed for railroad crossing approaches, intersection approaches, crosswalk approaches, ADA accessible parking space symbols, *interstate route shields*, and other messages applied to the pavement with pavement marking material. The markings shall consist of all necessary lines, words, and symbols as specified or directed, and shall be in accordance with the MUTCD.

Interstate route shields shall be 6 ft wide and have a length of 15 ft. Interstate route shields shall be thermoplastic and shall be chosen from the following manufacturers:

(a) Ennis-Flint, Inc.

(b) Approved Equal

Interstate route shields shall be supplemented with cardinal direction pavement message markings. The cardinal direction pavement message markings to be used with the interstate

route shields shall be made of thermoplastic and have white letters on a blue background. The cardinal direction pavement message marking for "NORTH" or "SOUTH" shall be 9 ft wide and have a length of 10 ft. The cardinal direction pavement message marking for "EAST" or "WEST" shall be 8 ft. wide and have a length of 10 ft. The cardinal direction pavement message markings shall be chosen from the following manufacturers:

(a) Ennis-Flint, Inc.

(b) Approved Equal

A type C certification in accordance with 916 shall be furnished for the interstate route shields and cardinal direction pavement message markings.

SECTION 808.12, BEGIN LINE 621, INSERT AS FOLLOWS:

Grooving for pavement markings will be measured as the total distance of grooving for each pavement marking line in linear feet. Pavement message markings *except interstate route shields and cardinal direction pavement message markings* will be measured by the total number of each type placed. *Interstate route shields and cardinal direction pavement message markings will not be measured for payment*.

SECTION 808.13, BEGIN LINE 644, INSERT AS FOLLOWS:

specified. Pavement message markings placed *except interstate route shields and cardinal direction pavement message markings* will be paid for at the contract unit price for each, for the material and message specified. *Interstate route shields and cardinal direction pavement message markings will be paid for at a contract lump sum price*.

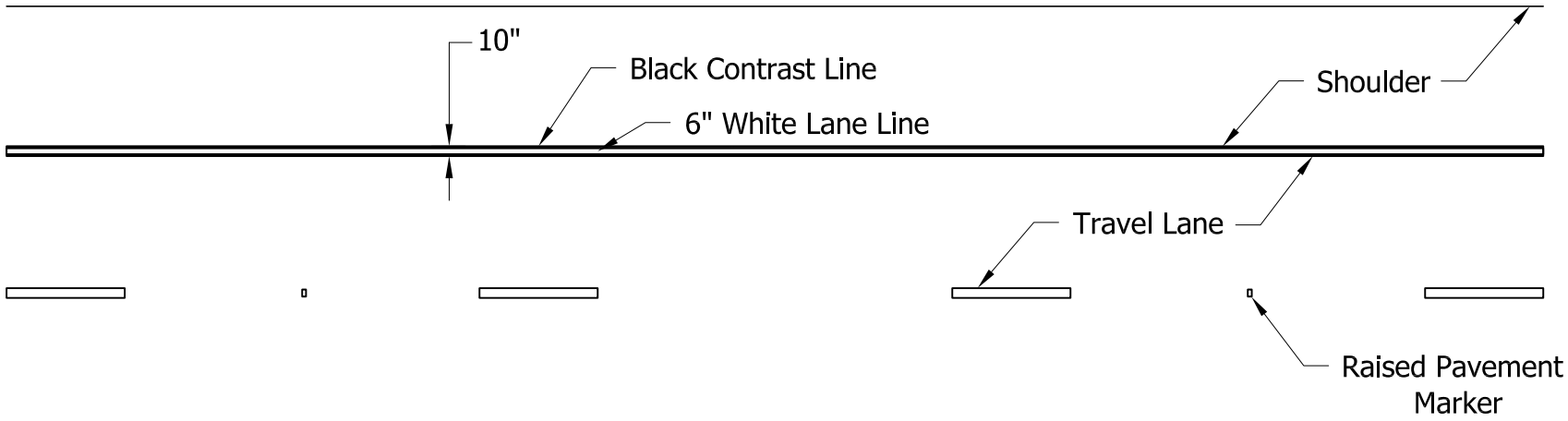

GENERAL NOTES

1. Contrast markings shall only be used on concrete pavements.
2. Contrast lane lines shall be in accordance with USP Contrast Lane Lines and Project Standards.

CONTRAST LINE DIMENSIONS		
White	Black (per side)	Total Width
6"	2"	10"

CONTRAST EDGE LINE DETAIL

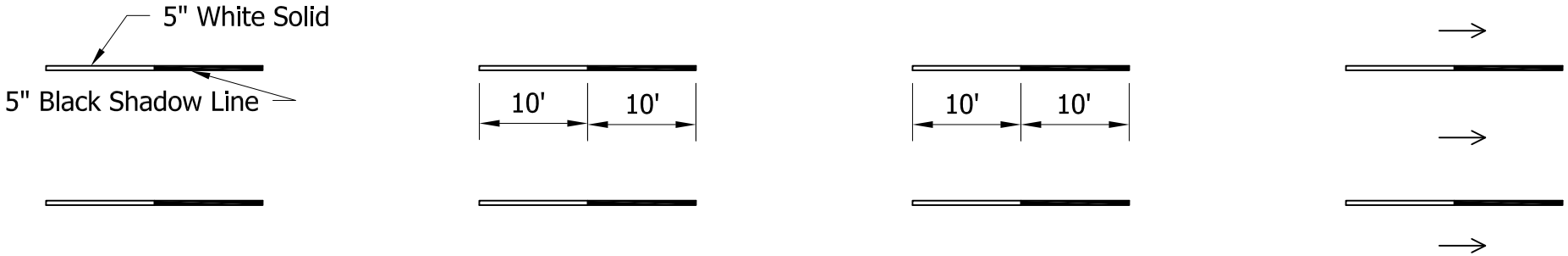

CONTRAST LANE LINE DETAIL

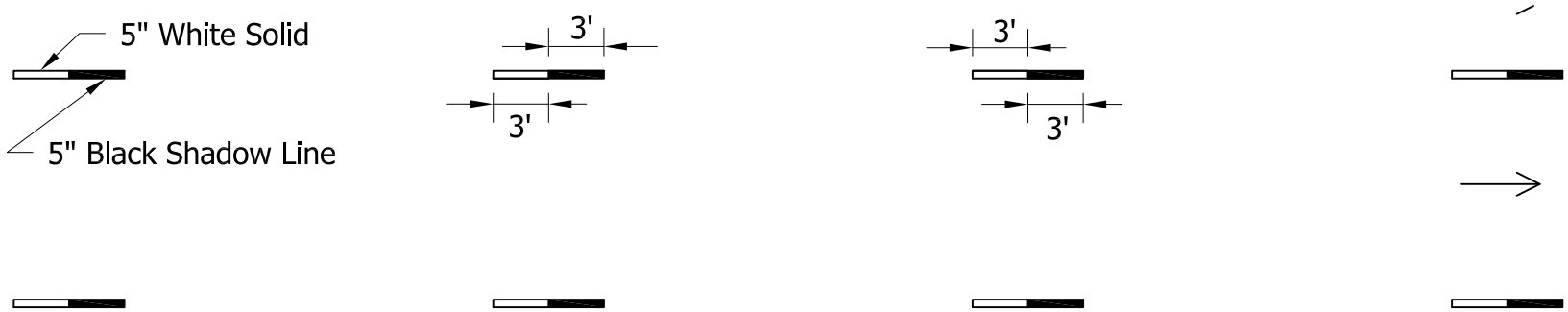

DOTTED CONTRAST LANE LINE DETAIL

WIDE DOTTED CONTRAST LANE LINE DETAIL

GENERAL NOTES

1. Concrete markings may only be used on concrete pavements.
2. Contrast lane lines shall be in accordance with USP Contrast Lane Lines and Project Standards.

CONTRAST LANE LINE DETAIL

NOTES

1. Transition lengths in accordance with Project Standards.

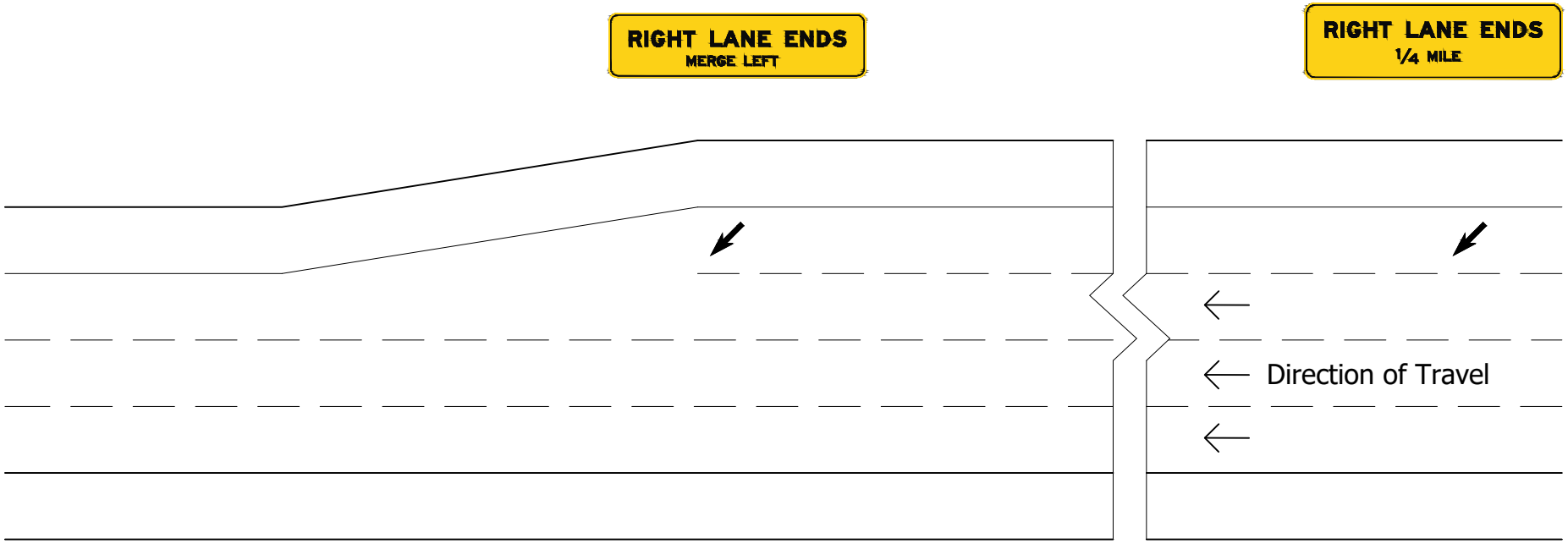

LANE-REDUCTION PAVEMENT MARKING DETAIL

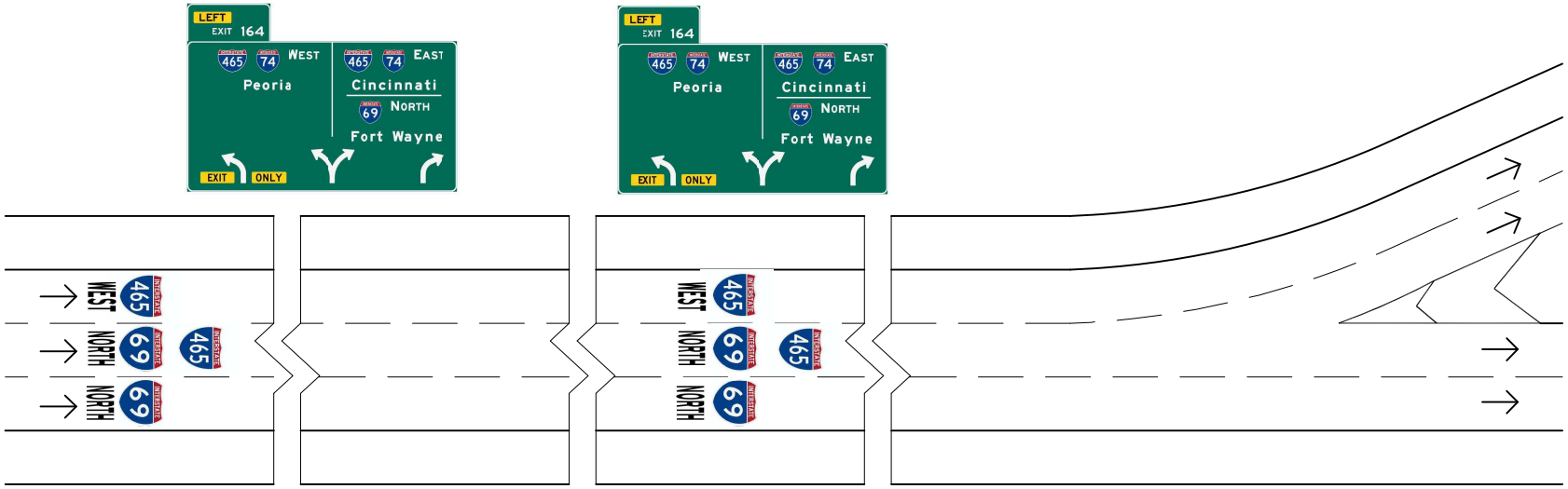

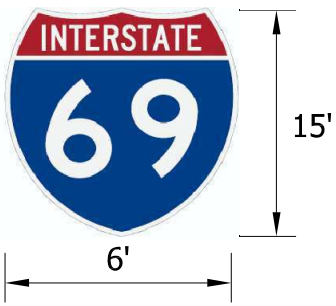

Cardinal Direction Dimensions		
Direction	Width (W)	Length (L)
North, South	9 ft.	10 ft.
East, West	8 ft.	10 ft.

NOTES:

1. Specific Arrow Per Lane Signs and pavement message markings are shown for reference only.
2. Pavement message markings shall be in accordance with USP Pavement Message Markings and Project Standards.

PAVEMENT MESSAGE MARKING DETAIL

TYPE XI REFLECTIVE SHEETING

The Standard Specifications are revised as follows:

SECTION 919.01, BEGIN LINE 78, INSERT AS FOLLOWS:

(b) Sheeting Material

Only sheeting materials from INDOT's list of approved Sign Sheeting Materials shall be used *for Type IV through Type X sheeting*. Type IV or higher sheeting shall be used *for all ground mounted* highway signs. *Type XI sheeting shall be used for all overhead highway signs*. *Type XI highway sheeting shall be from INDOT's list of approved Sign Sheeting Materials or from a manufacturer that has complete test results from the National Transportation Product Evaluation Program, NTPEP*. *A type C certification in accordance with 916 shall be furnished for Type XI sheeting.* The sheeting type for the sign copy and border shall be the same type or higher than the sheeting type used for the background. Sheeting materials will be placed and maintained on INDOT's approved list in accordance with ITM 930.

INDEX	
SHEET NO.	SUBJECT
1	Sign Box Truss Structure Extended Span Drawing Index and General Notes
2	Plan & Elevation
3	Truss Sections, Table with Member Sizes
4	Table of Dimensions, Spans 130' thru 154' and Camber
5	Chord Connections and Weld Details
6	Flange, Chord End Plate, and Wire Outlet Details
7	Upper Chord Connection Details
8	Lower Chord Connection and Saddle Shim Details
9	End-Support Lower Chord Connections, Alternate HSS Beam, and Saddle Shim Details
10	End-Support Base Plate
11	I.D. Plate Details
12	End-Support Top Cap, Handhole, and J-Hook Details
13	End-Support Anchor Bolt and Metal Skirt Details
14	Spread Foundation at 33" Concrete Barrier Wall
15	Spread Foundation at 45" Concrete Barrier Wall
16	Spread Foundation for Median or Shoulder, 36" Height
17	Spread Foundations Quantities
18	Alternate Drilled Shaft Foundation at 33" Concrete Barrier Wall
19	Alternate Drilled Shaft Foundation at 45" Concrete Barrier Wall
20	Alternate Drilled Shaft Foundation for Median or Shoulder, 36" Height
21	Alternate Drilled Shaft Foundations Quantities

GENERAL NOTES:

1. All truss members, walkways, bearing elements, and wire outlets are aluminum. End-support members are steel.
2. I.D. plate is required on each end-support column.
3. Minimum concrete strength f'c = 3500 psi.
4. Thread and cap both ends of steel conduits.

INDIANA DEPARTMENT OF TRANSPORTATION

SIGN BOX TRUSS STRUCTURE
EXTENDED SPAN
DRAWING INDEX

Eff. for Lettings on or After 03-01-20

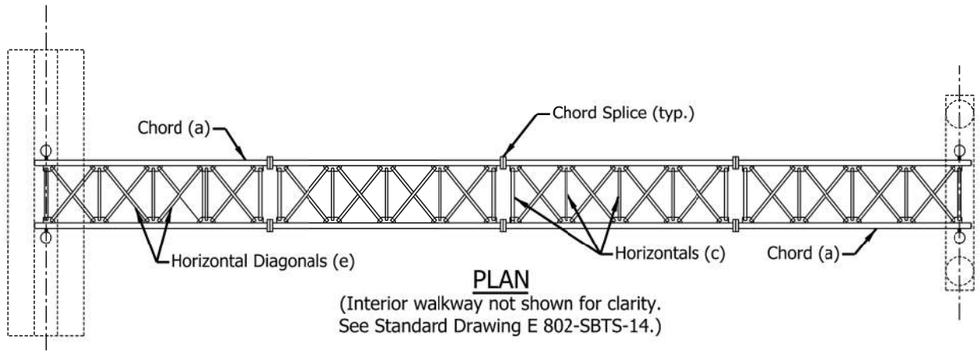

PLAN
(Interior walkway not shown for clarity.
See Standard Drawing E 802-SBTS-14.)

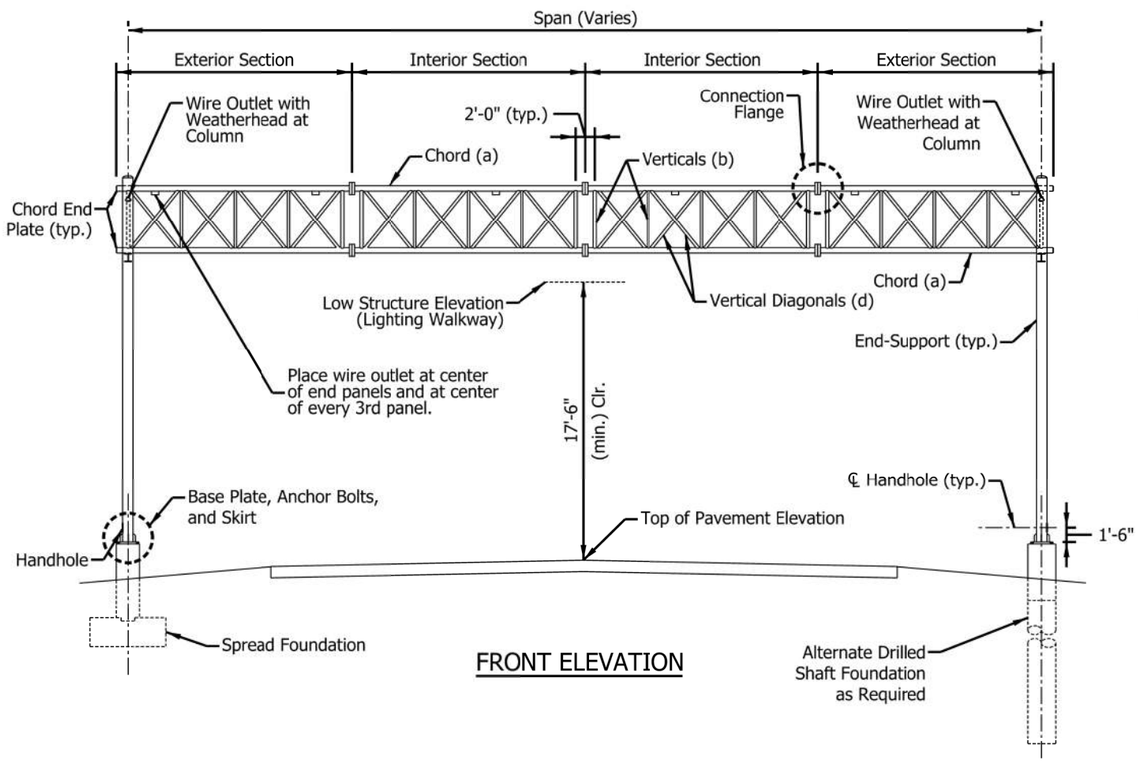

FRONT ELEVATION

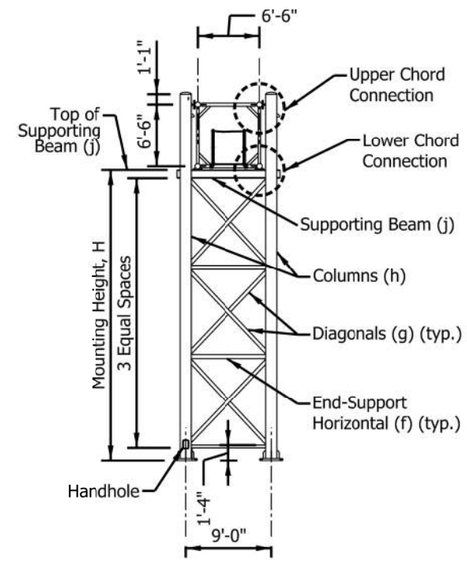

END-SUPPORT
SIDE VIEW

NOTES:

1. Maximum deviation of any chord from a straight line in any section shall be 1/8 in. for box truss to be a maximum of 3/8 in. out of a straight line over the entire length of the structure in the vertical plane.

INDIANA DEPARTMENT OF TRANSPORTATION

SIGN BOX TRUSS STRUCTURE
EXTENDED SPAN
PLAN & ELEVATION

NOTES:

1. Number of panels varies. See table on Sheet 4 for recommended dimensions.
2. See sheet 5 for welded connections and Details A through F.
3. Steel pipe diameters shown in table are nominal pipe size.
4. A corner brace is required on each of the eight external corners of exterior and interior sections.

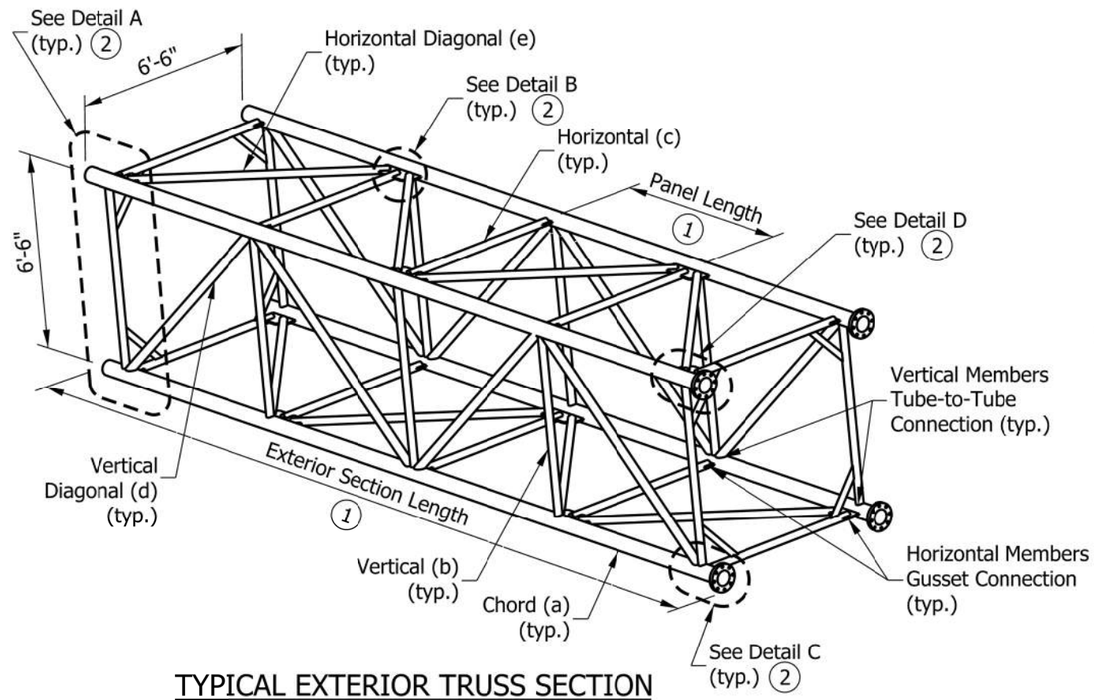

TYPICAL EXTERIOR TRUSS SECTION

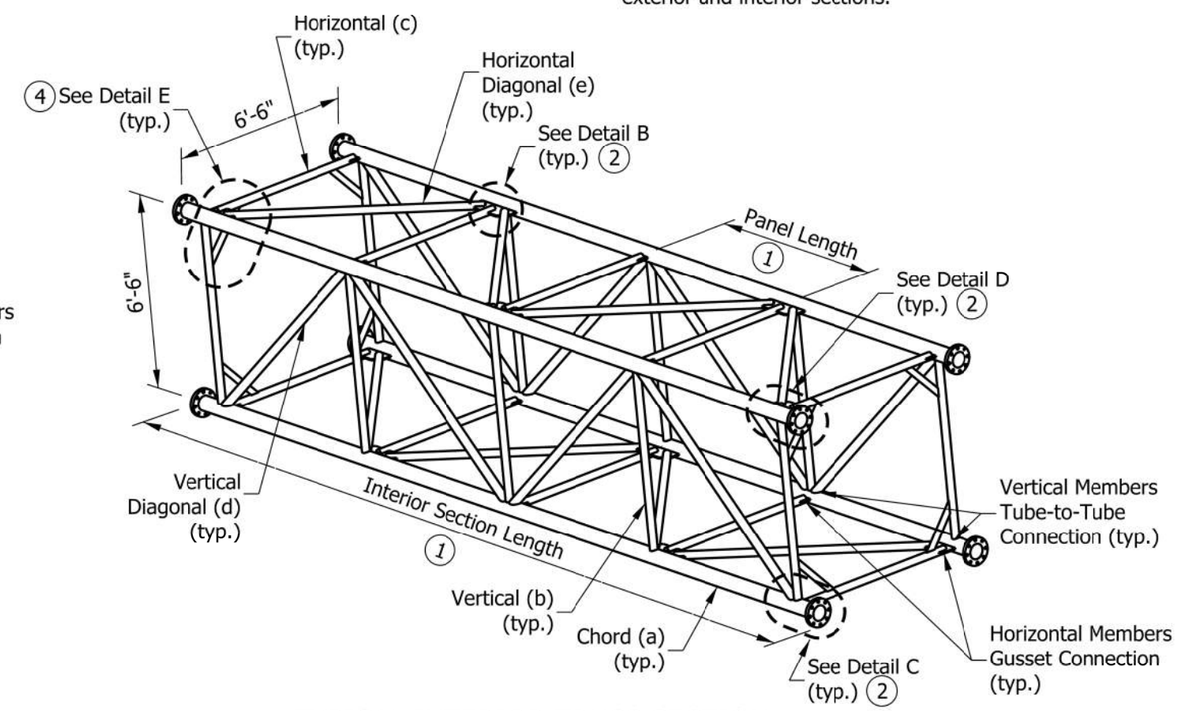

TYPICAL INTERIOR TRUSS SECTION

TRUSS TYPE	MAX. SIGN AREA	MAX. SPAN	MAX. MOUNTING HEIGHT	TRUSS MEMBERS, ALUMINUM										END-SUPPORT MEMBERS, STEEL						
				CHORD		VERTICAL		HORIZONTAL		VERTICAL DIAGONAL		HORIZONTAL DIAGONAL		HORIZONTAL		DIAGONAL		COLUMN		SUPPORTING BEAM
			H	a		b		c		d		e		f		g		h		j
				DIA.	THK	DIA.	THK	DIA.	THK	DIA.	THK	DIA.	THK	DIA.	THK	DIA.	THK	DIA.	THK	
	SQ. FT.	FT.	FT.	IN.	IN.	IN.	IN.	IN.	IN.	IN.	IN.	IN.	IN.	IN.	IN.	IN.	IN.	IN.	IN.	
F	1200	130	28'-6"	7.00	0.500	3.00	0.375	4.00	0.375	3.00	0.500	4.00	0.500	5.00	0.375	8.00	0.593	18.00	0.562	W 10 x 68 or HSS 10" x 10" x 1/2"
G		142	28'-6"	7.50	0.500	4.00	0.375	4.00	0.375	4.00	0.500	4.00	0.500	5.00	0.375	8.00	0.593	18.00	0.562	
H		154	28'-6"	9.00	0.500	4.00	0.500	4.00	0.375	4.00	0.500	4.00	0.500	5.00	0.375	8.00	0.593	18.00	0.562	

INDIANA DEPARTMENT OF TRANSPORTATION

SIGN BOX TRUSS STRUCTURE EXTNEDED SPAN TRUSS SECTIONS IN ISOMETRIC VIEWS, TABLE WITH MEMBER SIZES

DIMENSIONS FOR SIGN BOX TRUSSES (130' THRU 154')

SPAN	EXTERIOR SECTIONS					INTERIOR SECTIONS			
SPAN-TRUSS LENGTH, (FT)	NO. OF EXT. SECTIONS	NO. OF PANELS PER SECTION	VARIABLE END DIMEN.	PANEL LENGTH	SECTION LENGTH	NO. OF INT. SECTIONS	NO. OF PANELS PER SECTION	PANEL LENGTH	SECTION LENGTH
130	2	5	0" - 6 1/2"	6'-1 3/4"	33'-0 1/4"	2	5	6'-1 3/4"	32'-8 3/4"
131	2	5	0" - 6 1/4"	6'-2 3/8"	33'-3 1/8"	2	5	6'-2 3/8"	32'-11 7/8"
132	2	5	0" - 6"	6'-3"	33'-6"	2	5	6'-3"	33'-3"
133	2	5	0" - 7"	6'-3 1/2"	33'-9 1/2"	2	5	6'-3 1/2"	33'-5 1/2"
134	2	5	0" - 6 3/4"	6'-4 1/8"	34'-0 3/8"	2	5	6'-4 1/8"	33'-8 5/8"
135	2	5	0" - 6 1/2"	6'-4 3/4"	34'-3 1/4"	2	5	6'-4 3/4"	33'-11 3/4"
136	2	5	0" - 6 1/4"	6'-5 3/8"	34'-6 1/8"	2	5	6'-5 3/8"	34'-2 7/8"
137	2	5	0" - 6"	6'-6"	34'-9"	2	5	6'-6"	34'-6"
138	2	6	0" - 6 7/8"	5'-11 3/8"	38'-0 1/8"	2	5	5'-11 3/8"	31'-8 7/8"
139	2	6	0" - 7 3/8"	5'-11 7/8"	38'-3 5/8"	2	5	5'-11 7/8"	31'-11 3/8"
140	2	6	0" - 6 1/2"	6'-0 1/2"	38'-6 1/2"	2	5	6'-0 1/2"	32'-2 1/2"
141	2	6	0" - 7"	6'-1"	38'-10"	2	5	6'-1"	32'-5"
142	2	6	0" - 6 1/8"	6'-1 5/8"	39'-0 7/8"	2	5	6'-1 5/8"	32'-8 1/8"
143	2	6	0" - 6 5/8"	6'-2 1/8"	39'-4 3/8"	2	5	6'-2 1/8"	32'-10 5/8"
144	2	6	0" - 7 1/8"	6'-2 5/8"	39'-7 7/8"	2	5	6'-2 5/8"	33'-1 1/8"
145	2	6	0" - 6 1/4"	6'-3 1/4"	39'-10 3/4"	2	5	6'-3 1/4"	33'-4 1/4"
146	2	6	0" - 6 3/4"	6'-3 3/4"	40'-2 1/4"	2	5	6'-3 3/4"	33'-6 3/4"
147	2	6	0" - 5 7/8"	6'-4 3/8"	40'-5 1/8"	2	5	6'-4 3/8"	33'-9 7/8"
148	2	6	0" - 6 3/8"	6'-4 7/8"	40'-8 5/8"	2	5	6'-4 7/8"	34'-0 3/8"
149	2	6	0" - 6 7/8"	6'-5 3/8"	41'-0 1/8"	2	5	6'-5 3/8"	34'-2 7/8"
150	2	6	0" - 7 1/2"	5'-11 3/8"	38'-0 3/4"	2	6	5'-11 3/8"	37'-8 1/4"
151	2	6	0" - 7 1/2"	5'-11 7/8"	38'-3 3/4"	2	6	5'-11 7/8"	37'-11 1/4"
152	2	6	0" - 6"	6'-0 1/2"	38'-6"	2	6	6'-0 1/2"	38'-3"
153	2	6	0" - 6"	6'-1"	38'-9"	2	6	6'-1"	38'-6"
154	2	6	0" - 6"	6'-1 1/2"	39'-0"	2	6	6'-1 1/2"	38'-9"

NOTES:

1. All panels on a truss shall be the same length. The minimum panel length is 5 ft. 0 in. and the maximum is 6 ft. 6 in.
2. Use minimum number of sections for each box truss structure.
3. Camber diagrams for truss structures with 4 sections is shown. Cambers shown are for fabrication only and are measured with trusses fully supported at no-load conditions. Allowable camber tolerance for truss is 25% of specific camber value.

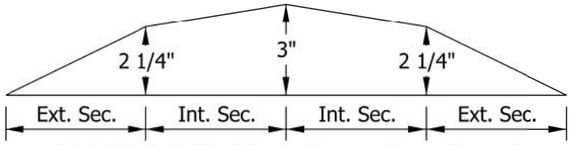

CAMBER DIAGRAM (4-Section Truss)

INDIANA DEPARTMENT OF TRANSPORTATION

SIGN BOX TRUSS STRUCTURE EXTENDED SPAN
TABLE OF DIMENSIONS
SPANS 130' THROUGH 154" AND CAMBER

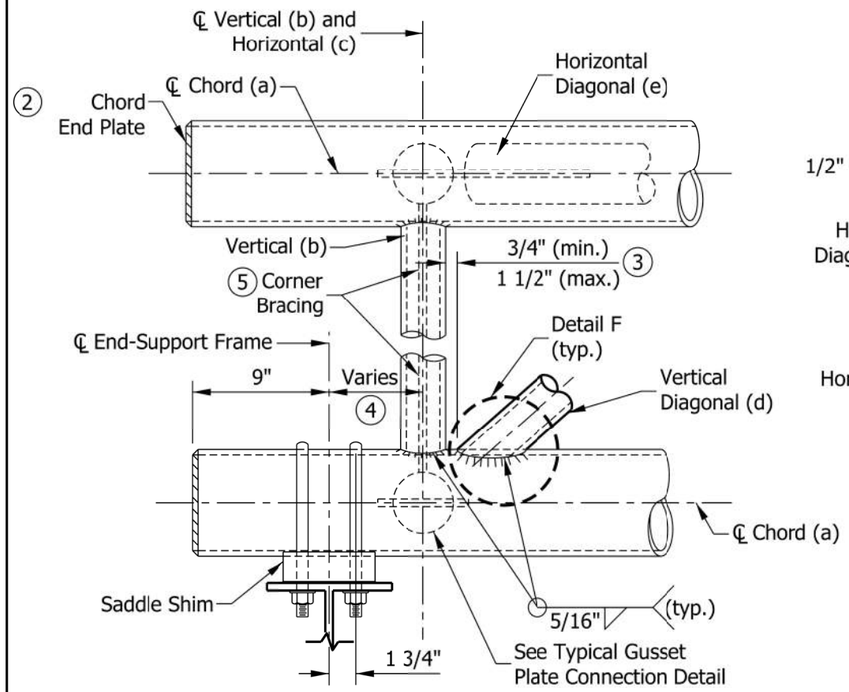

DETAIL A
EXTERIOR SECTION AT END SUPPORT

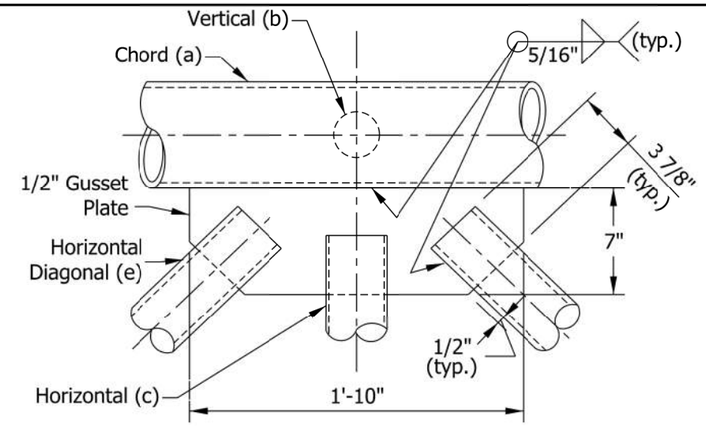

DETAIL B
TYPICAL PANEL CONNECTION
PLAN VIEW

NOTES:

1. All bracing members shall be machined to provide a snug fit to the chord along the entire edge of bracing member before welding.
2. (2) End plate at horizontal (c) and horizontal diagonal (e) may be welded as one piece and slotted or welded as two pieces after slotting the member.
3. (3) Vertical and horizontal diagonals shall be fabricated for minimum offset from the panel point offset to provide a 3/4 in. minimum to 1 1/2 in. maximum clearance between any diagonal and any horizontal or vertical member.
4. (4) See sheet 4 for variable end dimension
5. (5) Each brace member to be 3 in. x 1ft. 9in. x 1/2 in. plate and placed at 45° to vertical.

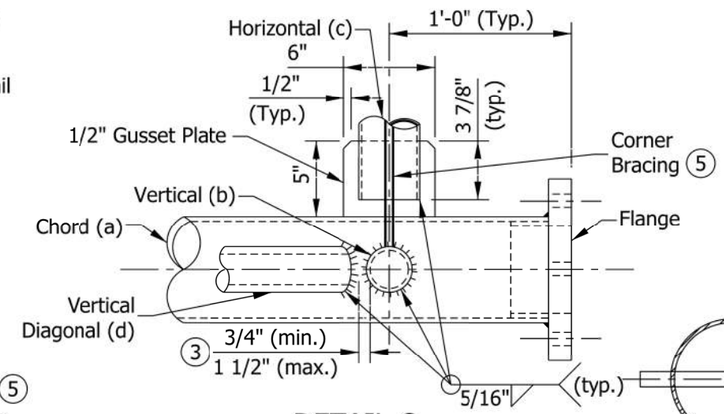

DETAIL C
CHORD AT FLANGE CONNECTION
PLAN VIEW

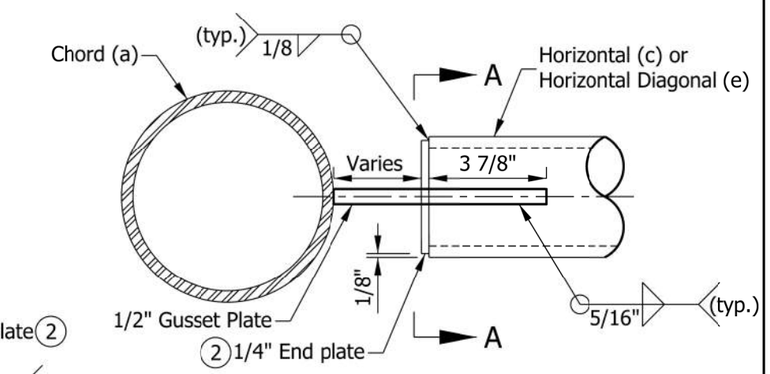

TYPICAL GUSSET PLATE CONNECTION DETAIL
ELEVATION VIEW

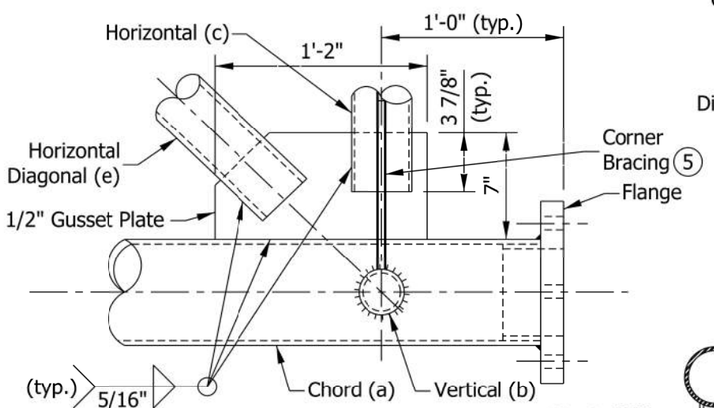

DETAIL D
CHORD AT FLANGE CONNECTION
PLAN VIEW

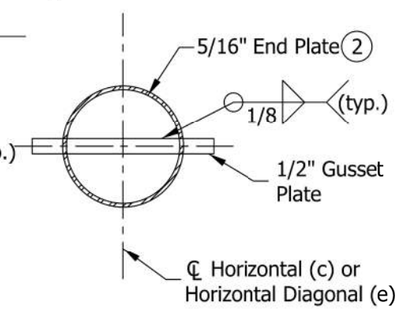

SECTION A-A

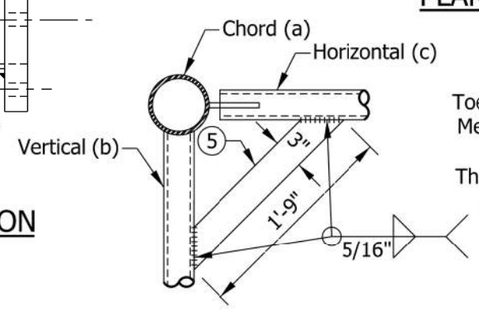

DETAIL E
TYPICAL CORNER BRACING

Toe Edge of Diagonal Member Shall be Cut Back to Facilitate Throat Thickness Per AWS D1.1, Fig 3.2

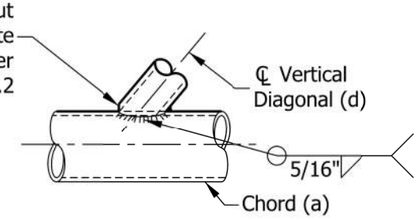

DETAIL F

INDIANA DEPARTMENT OF TRANSPORTATION

SIGN BOX TRUSS STRUCTURE EXTENDED SPAN
CHORD CONNECTIONS AND WELD DETAILS

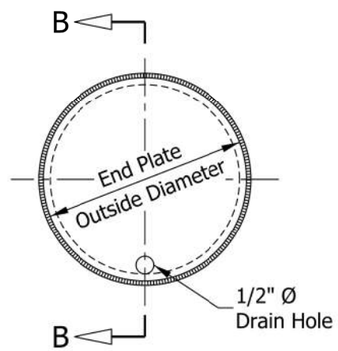

END VIEW

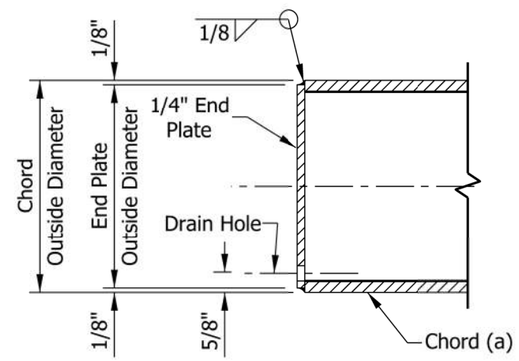

SECTION B-B

CHORD END PLATE DETAILS

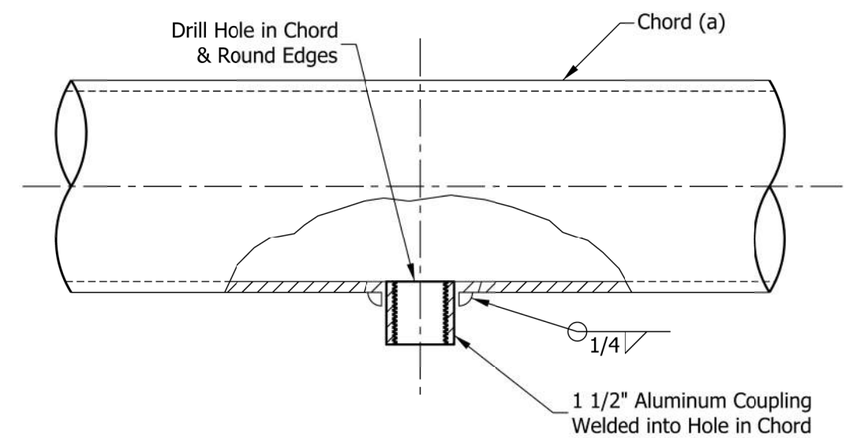

WIRE OUTLET DETAIL

TABLE OF FLANGE DIMENSIONS						
TRUSS TYPE	TRUSS CHORD O.D. x THK.	BOLT SIZE	DIMENSION			
			A	B	C	D
F	7" x 1/2"	7/8"	14"	10"	5 1/2"	1 3/4"
G	7 1/2" x 1/2"	7/8"	14 1/2"	10 1/2"	6"	2"
H	9" x 1/2"	7/8"	16"	12"	7 1/2"	2"

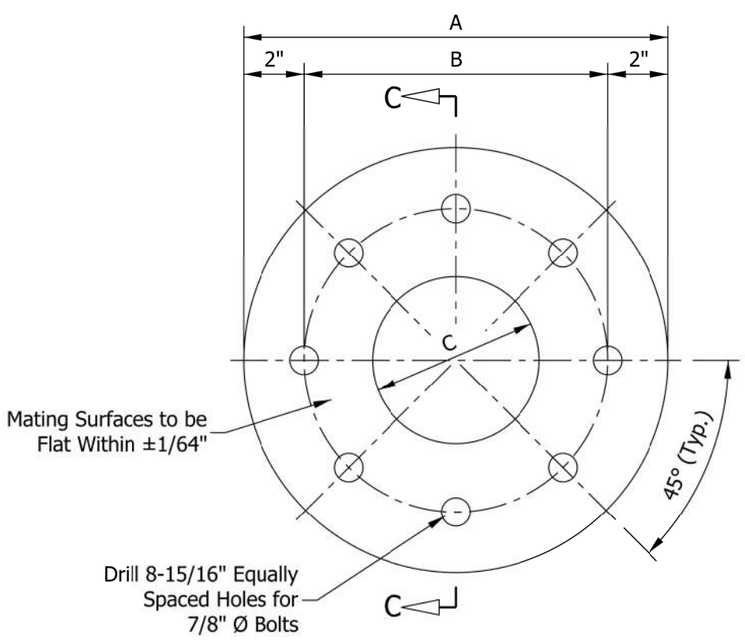

END VIEW

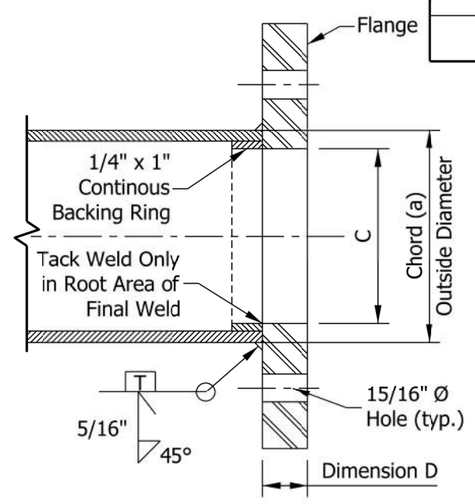

SECTION C-C

FLANGE DETAILS

INDIANA DEPARTMENT OF TRANSPORTATION

SIGN BOX TRUSS STRUCTURE EXTENDED SPAN
FLANGE, CHORD END PLATE, AND WIRE
OUTLET DETAILS

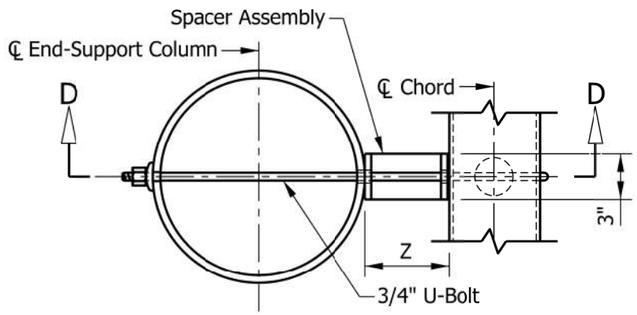

PLAN

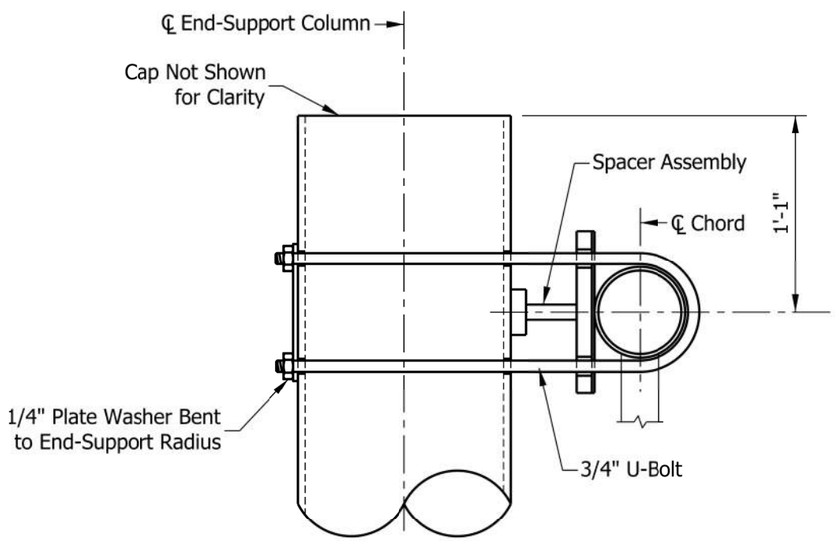

SECTION D-D
UPPER CHORD CONNECTION DETAILS

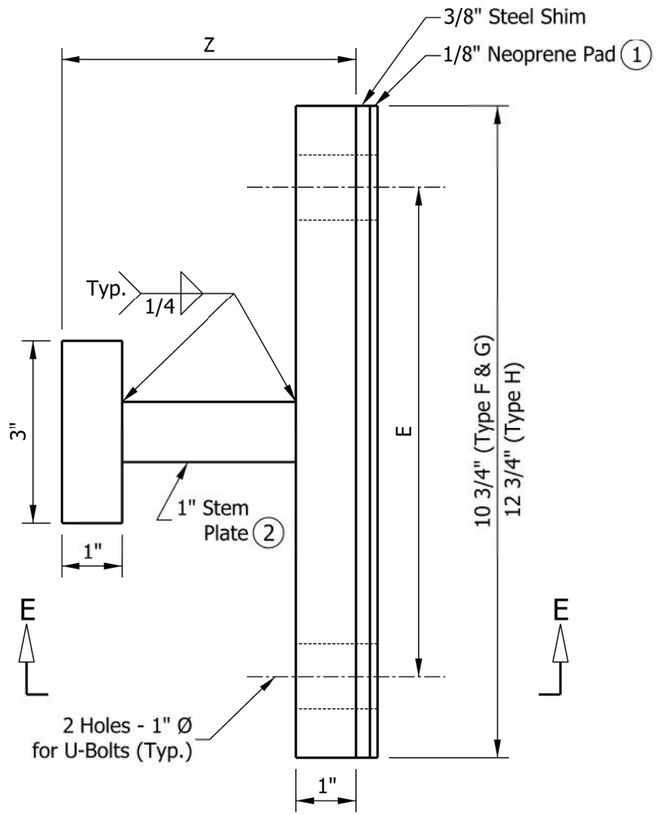

ELEVATION
END SUPPORT SPACER ASSEMBLY DETAIL

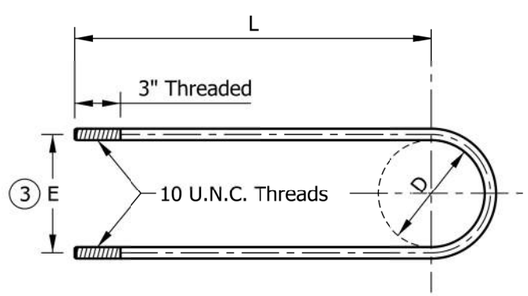

3/4" DIA. STAINLESS STEEL U-BOLT DETAIL

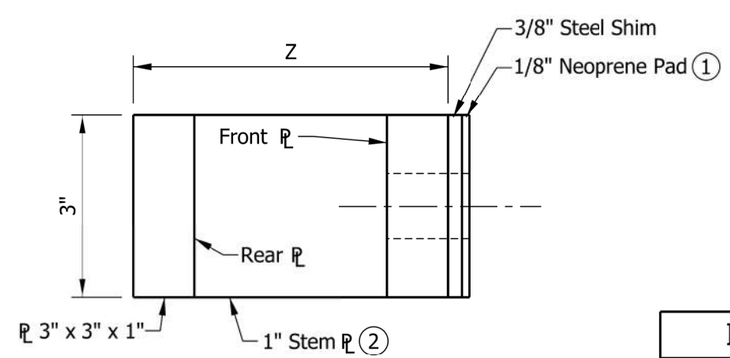

SECTION E-E

NOTES:

1. Provide isolation from steel-dissimilar metal as required.
2. For trusses, type F, the 1 in. stem plate is not required. Fillet weld front and rear plates together. Spacer assembly is not required for Truss Type G & H.
3. Dimension E is equal to the diameter of chord (a) plus 1 in.

SPACER ASSEMBLY DIMENSIONS

TRUSS TYPE	END-SUPPORT COLUMN SIZE O.D (h)	CHORD O. D. (a)	Ø OF U-BOLT BEND (D)	E	Z	L
F	18"	7"	7 1/16"	8"	2"	26"
G	18"	7 1/2"	7 9/16"	8 1/2"	1 3/4"	26"
H	18"	9"	9 1/16"	10"	1"	26"

INDIANA DEPARTMENT OF TRANSPORTATION

SIGN BOX TRUSS STRUCTURE EXTENDED SPAN
END-SUPPORT
UPPER CHORD CONNECTION DETAILS

Eff. for Lettings on or After 03-01-20

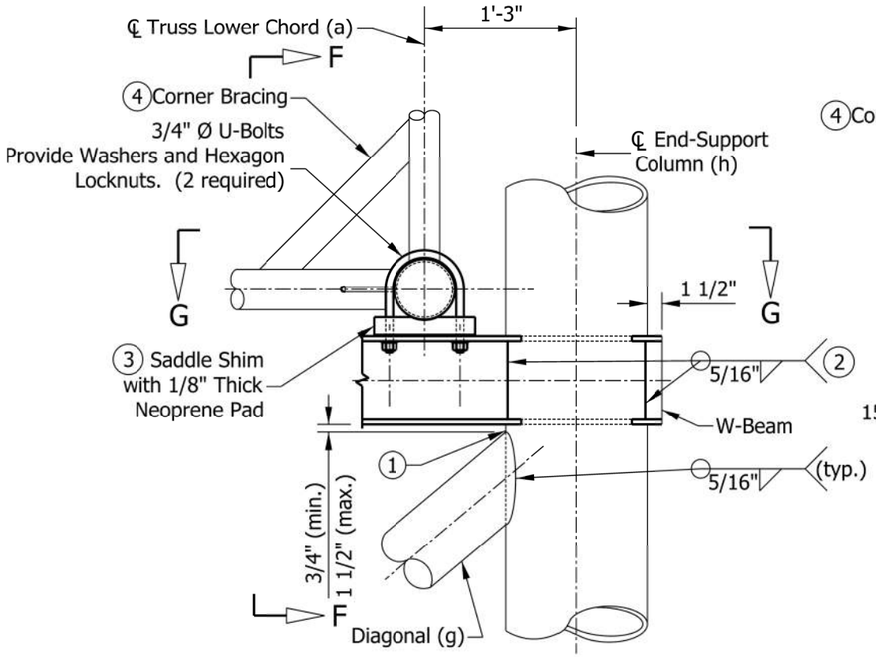

LOWER CHORD CONNECTION DETAIL

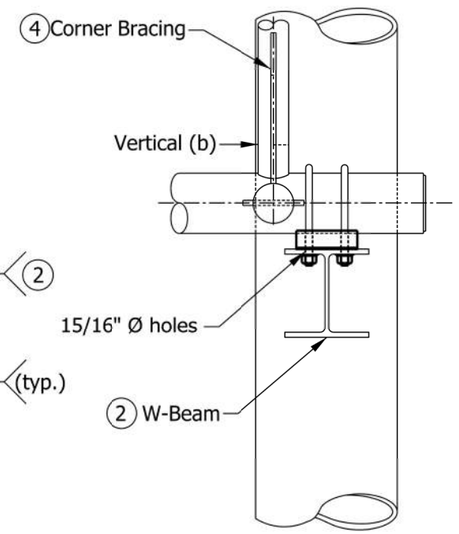

SECTION F-F

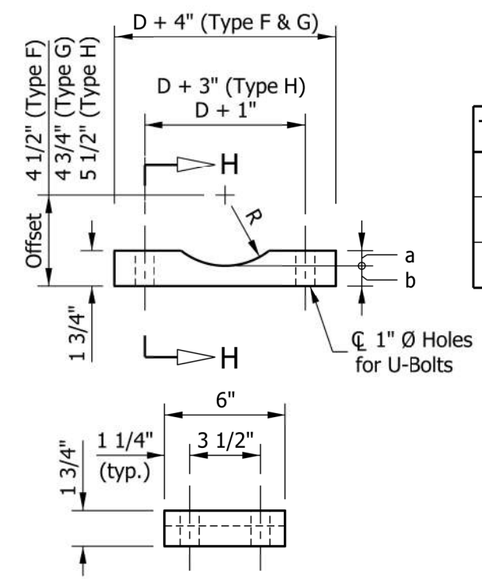

SECTION H-H
SADDLE SHIM DETAIL

NOTES:

1. Toe edge of diagonal member shall be cut back to facilitate throat thickness. See sheet 5, detail F.
2. Cut holes in end support columns for W-beams to pass through. Holes have 1/8 in. maximum clearance to W-beam. Hole in opposite sides of column to be checked for proper alignment prior to cutting.
3. Provide neoprene pads at all chord-to-W-beam bearing surfaces.
4. A corner brace is required on each of the eight external corners of exterior and interior sections. Each brace shall be 1 ft. 9 in. x 3 in. x 1/2 in. See sheet 5, detail E.

TRUSS TYPE	D	a	b
F	7"	25/32"	31/32"
G	7 1/2"	25/32"	31/32"
H	9"	25/32"	31/32"

R = D/2 + 1/32"

R + b = Offset

D = Outside Diameter of Chord(a).

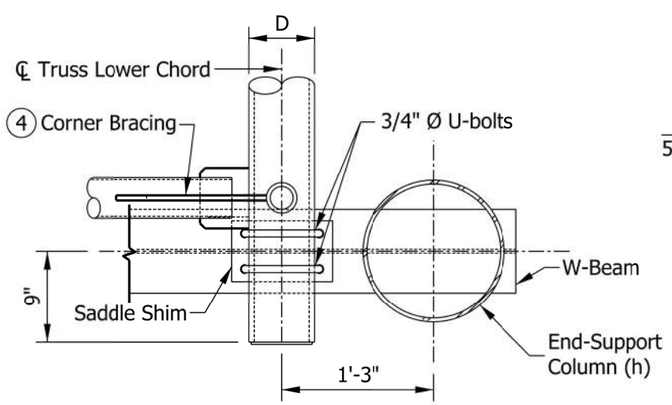

SECTION G-G

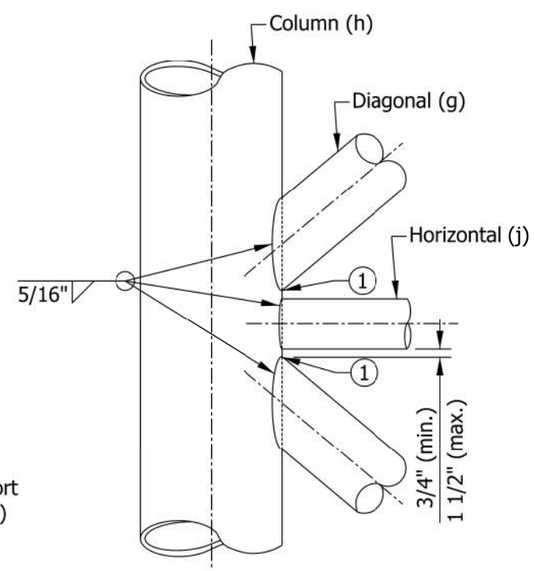

ELEVATION (END-SUPPORT)
TYPICAL BRACING MEMBERS CONNECTION

INDIANA DEPARTMENT OF TRANSPORTATION

SIGN BOX TRUSS STRUCTURE EXTENDED SPAN
END-SUPPORT LOWER CHORD
CONNECTION DETAILS

Eff. for Lettings on or After 03-01-20

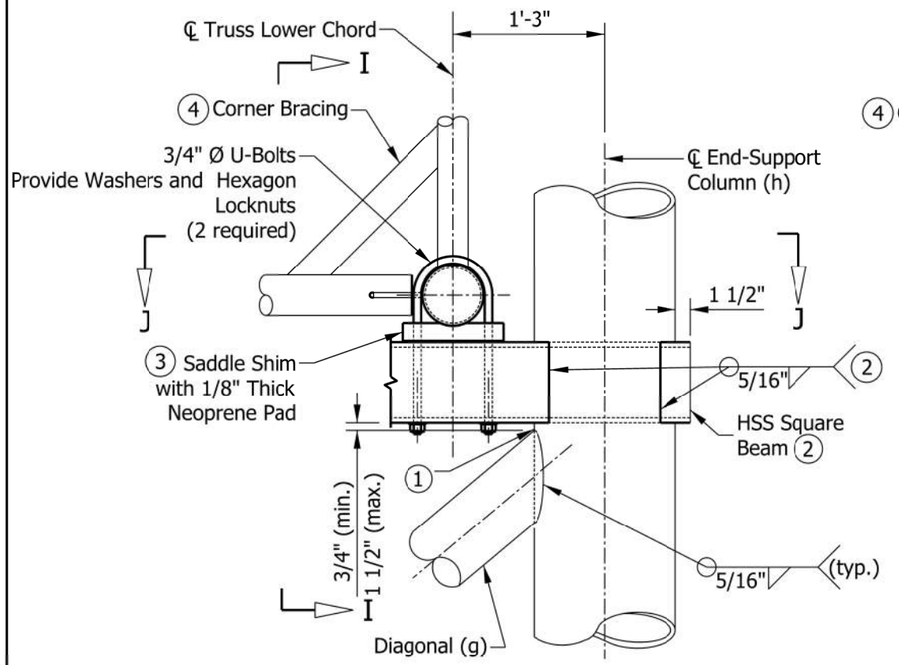

LOWER CHORD CONNECTION DETAIL

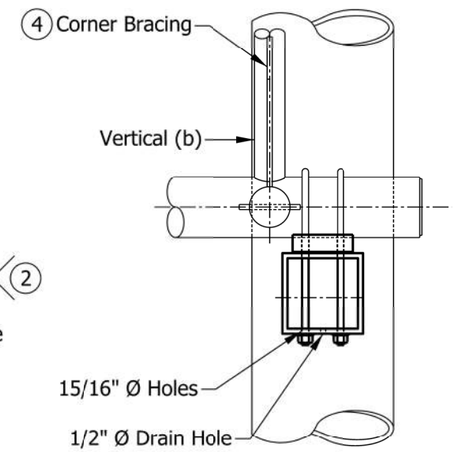

SECTION I-I

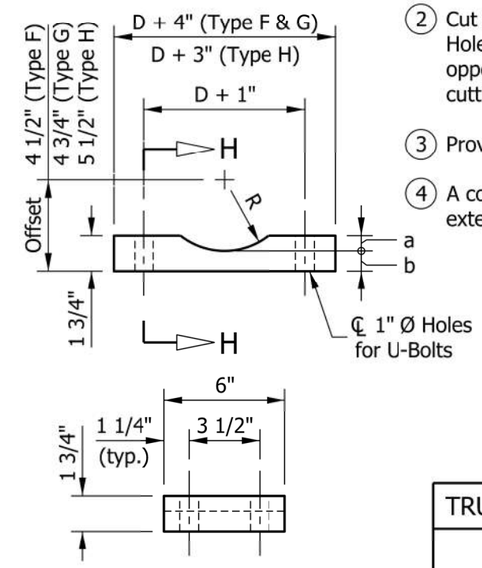

SECTION H-H
SADDLE SHIM DETAIL

NOTES:

1. Toe edge of diagonal member shall be cut back to facilitate throat thickness. See sheet 5, Detail F.
2. Cut holes in end support columns for square beams to pass through. Holes to have 1/8 in. maximum clearance to square beam. Holes in opposite sides of column to be checked for proper alignment prior to cutting.
3. Provide neoprene pads at all chord-to-square-beam bearing surfaces.
4. A corner brace is required on each of the eight external corners of exterior and interior sections. See sheet 5, Detail E.

TRUSS TYPE	D	a	b
F	7"	25/32"	31/32"
G	7 1/2"	25/32"	31/32"
H	9"	25/32"	31/32"

R = D/2 + 1/32"

R + b = Offset

D = Outside Diameter of Chord(a).

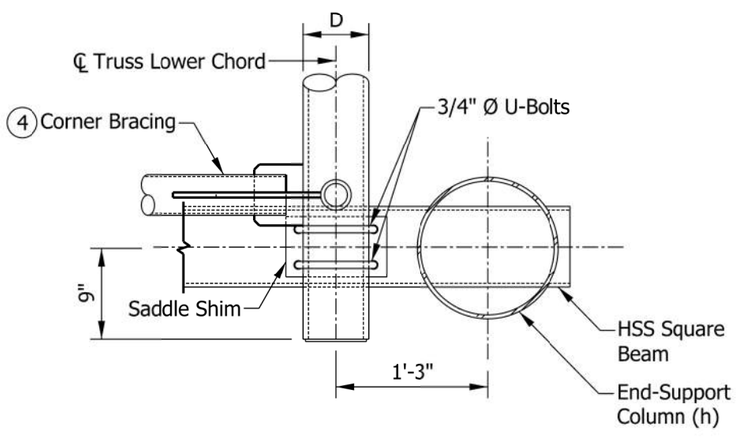

SECTION J-J

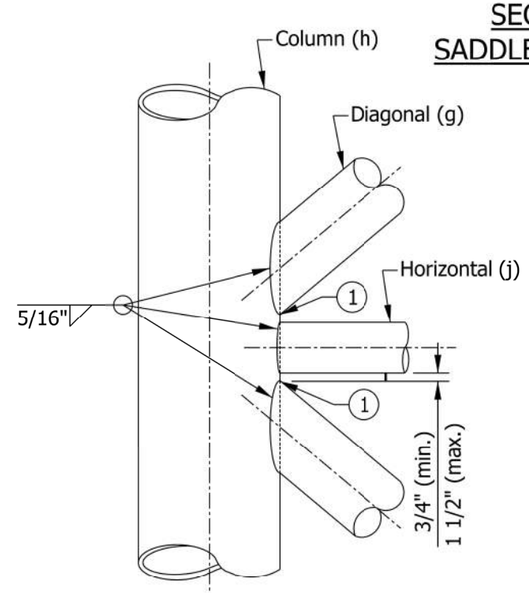

ELEVATION (END-SUPPORT)
TYPICAL BRACING MEMBERS CONNECTION

INDIANA DEPARTMENT OF TRANSPORTATION

SIGN BOX TRUSS STRUCTURE EXTENDED SPAN
END-SUPPORT LOWER CHORD
CONNECTION DETAILS, ALTERNATE HSS BEAM

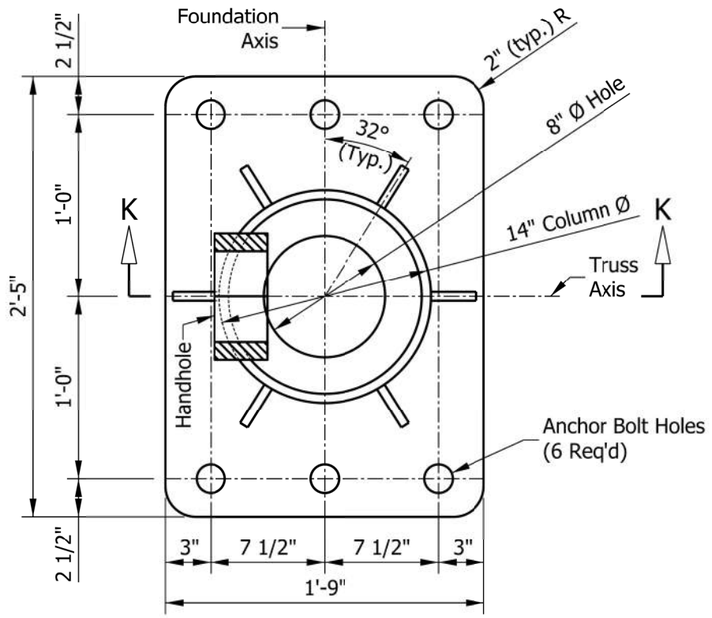

TYPE B-14 BASE PLATE

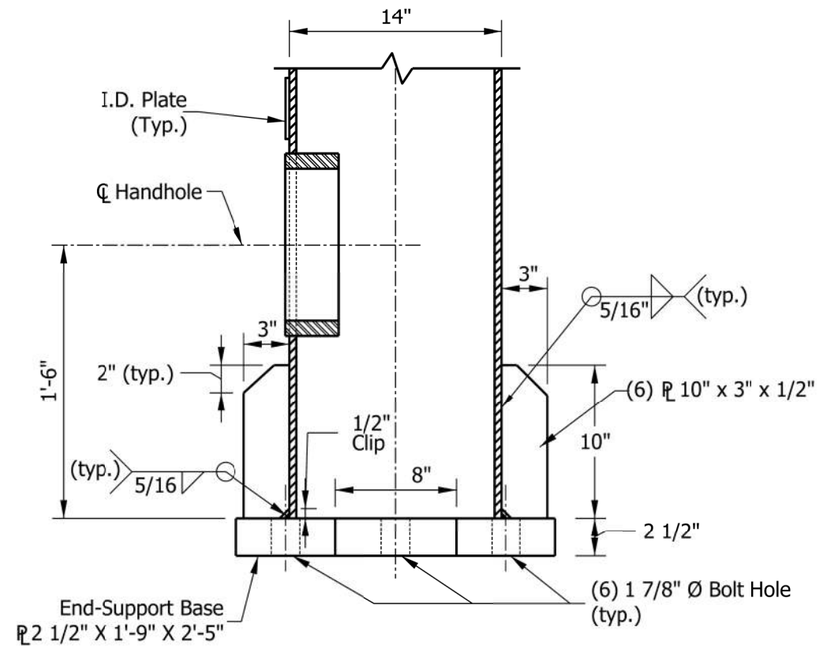

SECTION K-K

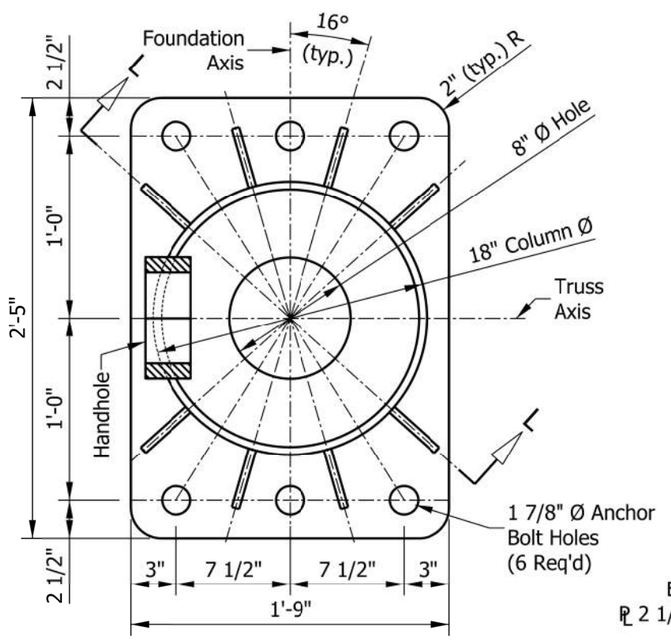

TYPE B-18 BASE PLATE

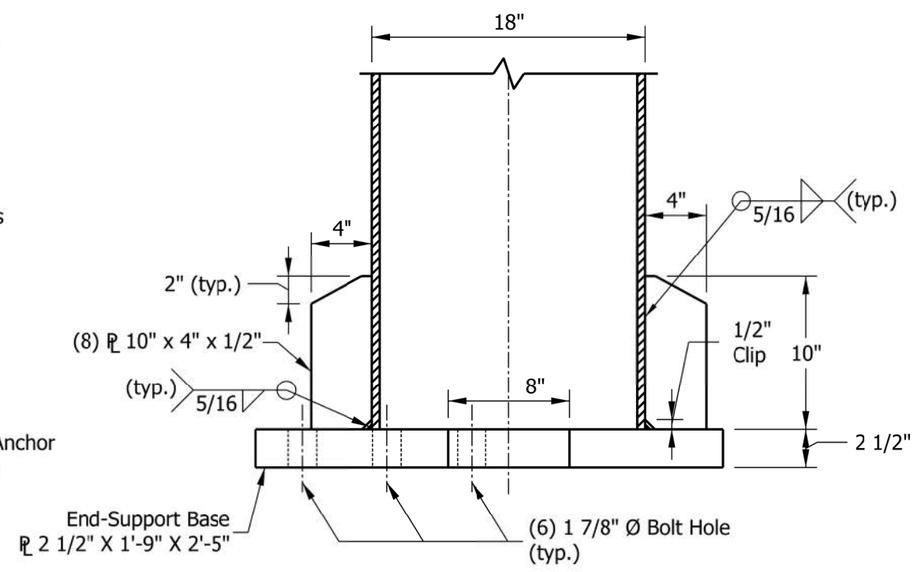

SECTION L-L

NOTES:

1. • Type B-14 base plate for end-support column diameter of 14 in.
   • Type B-18 base plate for end-support column diameter of 18 in.

INDIANA DEPARTMENT OF TRANSPORTATION

SIGN BOX TRUSS STRUCTURE EXTENDED SPAN
END-SUPPORT BASE PLATE

NOTES:

1. I.D. plate is required on each end-support column. I.D. plate is a 1/8 in. thick stainless steel plate.

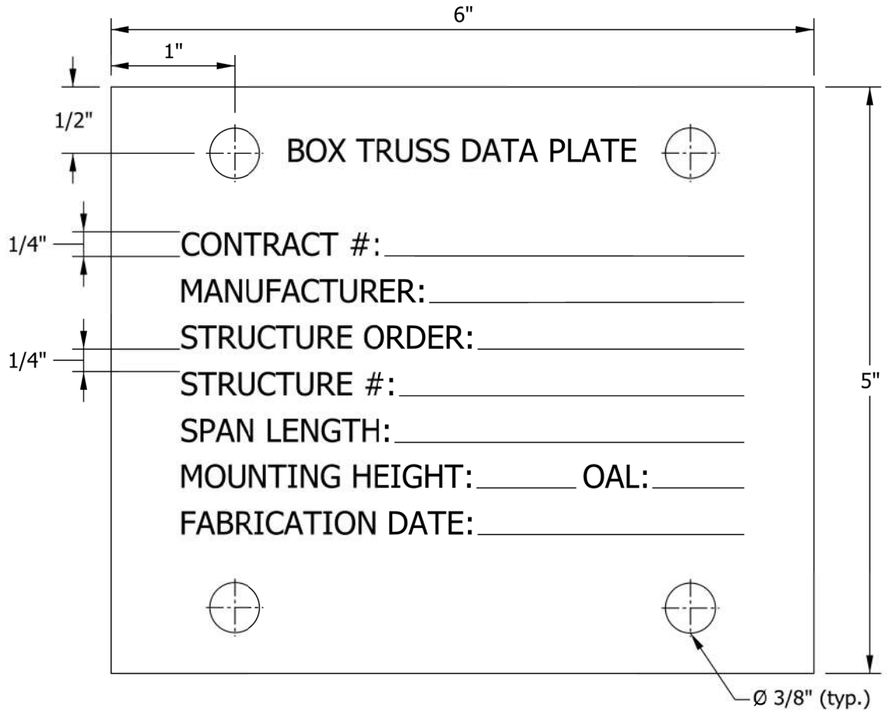

I.D PLATE

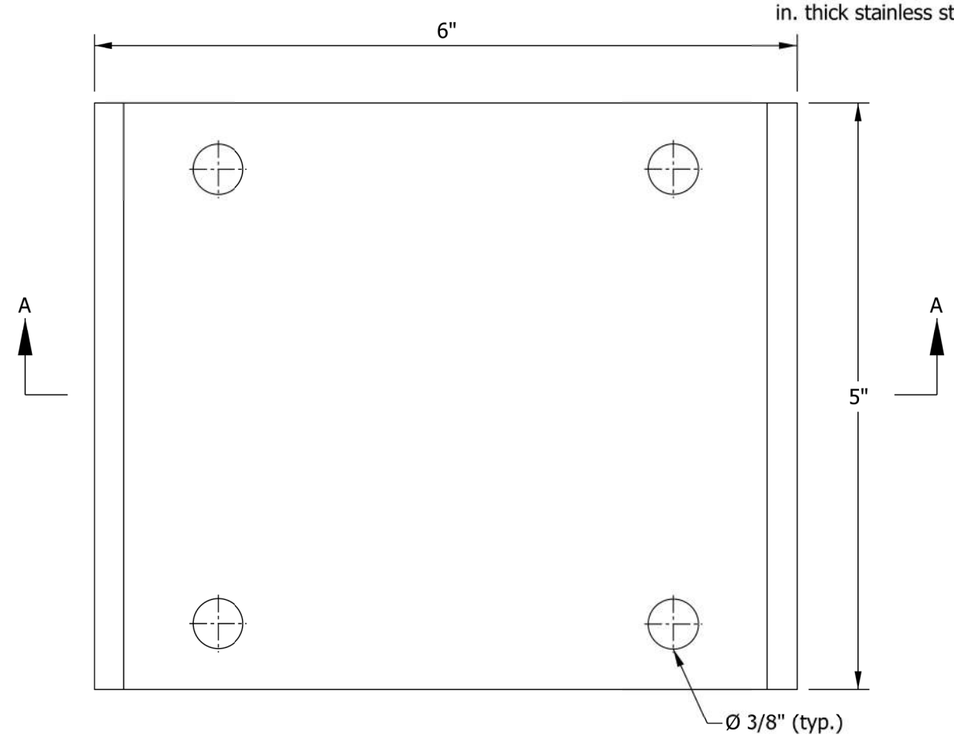

I.D PLATE CHANNEL

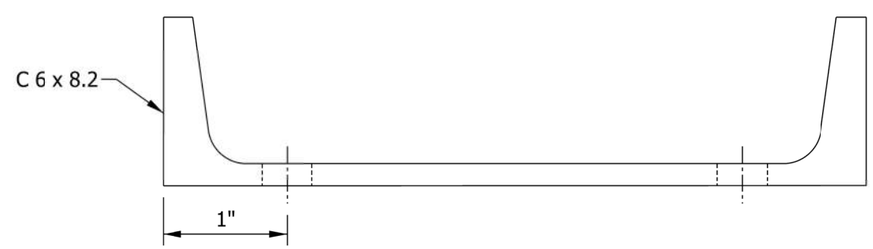

SECTION A-A

INDIANA DEPARTMENT OF TRANSPORTATION

SIGN BOX TRUSS STRUCTURE EXTENDED SPAN
I.D. PLATE DETAILS

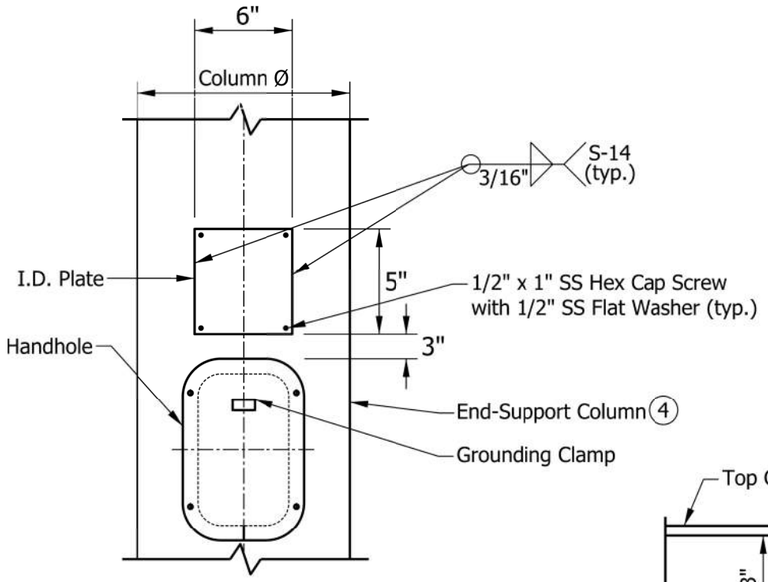

ELEVATION
VIEW FROM HANDHOLE SIDE

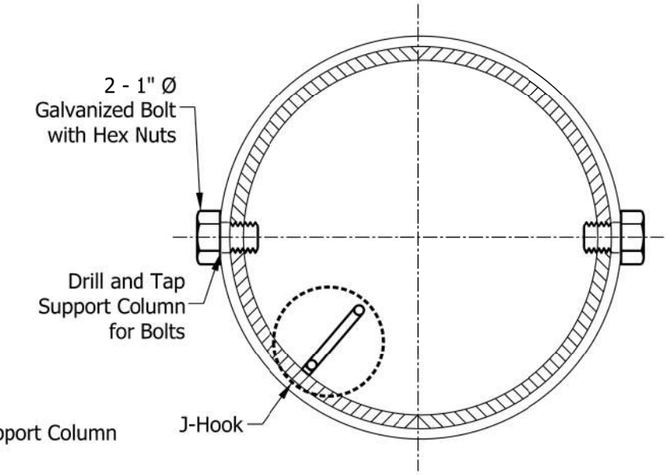

SECTION M-M

NOTES:

1. In lieu of fabricatied handhole frame as shown, frame may be cut from 3 in. plate (rolling direction vertical).
2. See Standard Drawing E 802-SNWR-03 for grounding post details. Grounding post to be placed on far side of support directly opposite center of handhole.
3. See sheet 3 for thickness of end-support columns (h).
4. Each end-support shall have one handhole at the column (h) base. Handhole shall be placed on the column nearest to the sign.

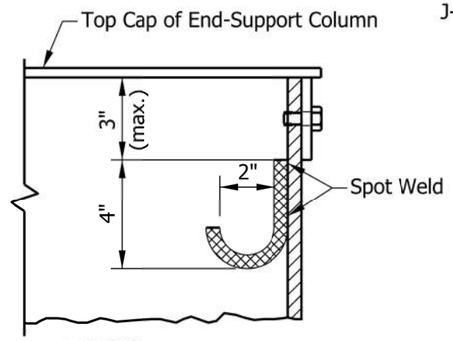

J-HOOK DETAIL

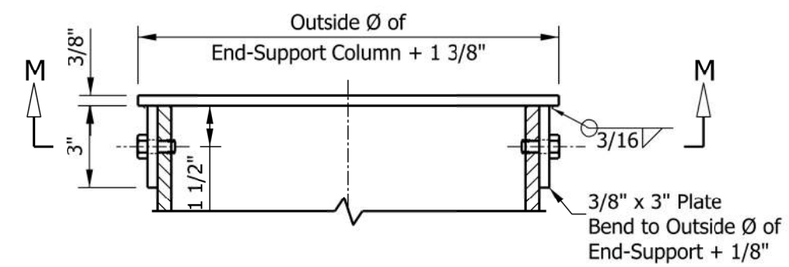

TOP CAP
ELEVATION VIEW

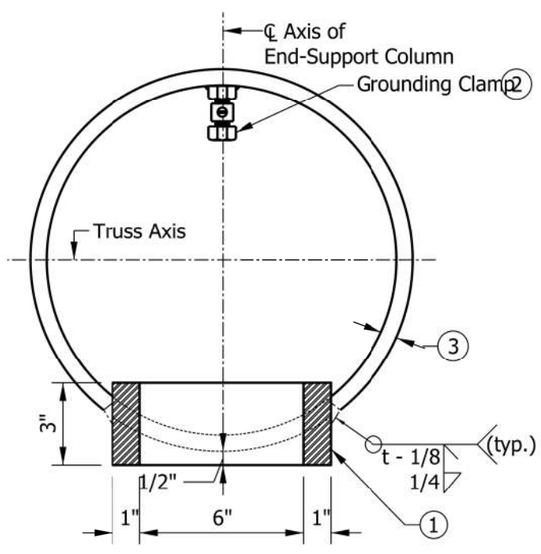

HANDHOLE
SECTION ACROSS COLUMN

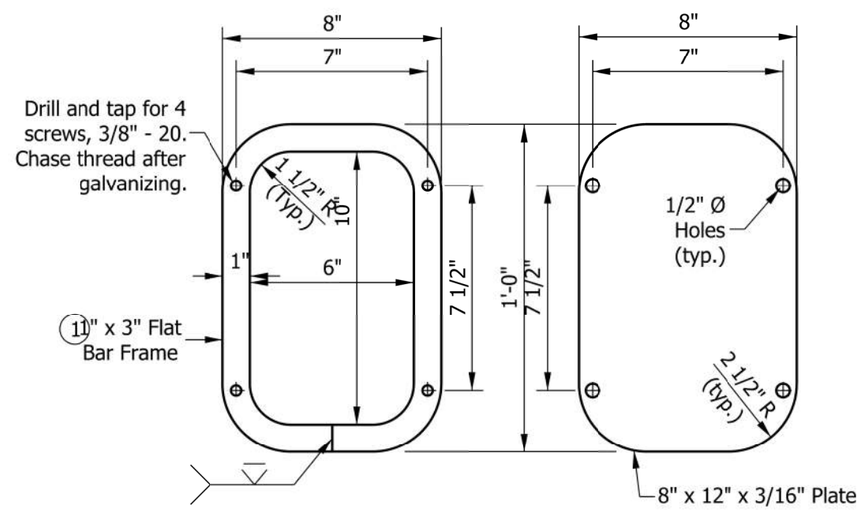

HANDHOLE FRAME DETAIL

HANDHOLE COVER

INDIANA DEPARTMENT OF TRANSPORTATION

SIGN BOX TRUSS STRUCTURE EXTENDED SPAN
END-SUPPORT
TOP-CAP, HANDHOLE, AND J-HOOK DETAILS

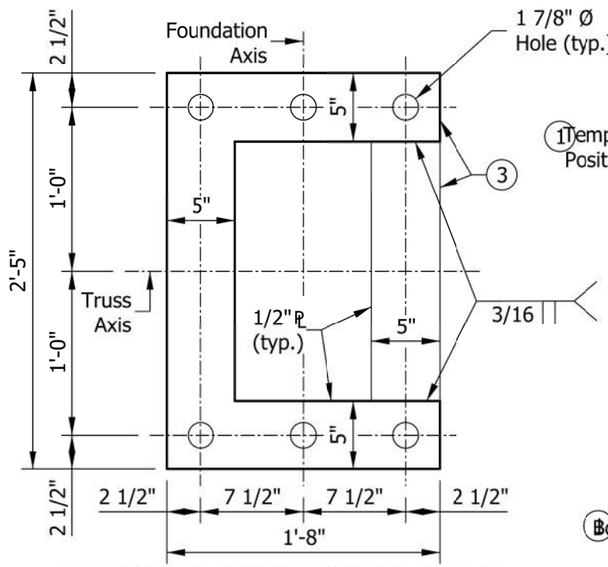

TEMPORARY POSITIONING PLATE

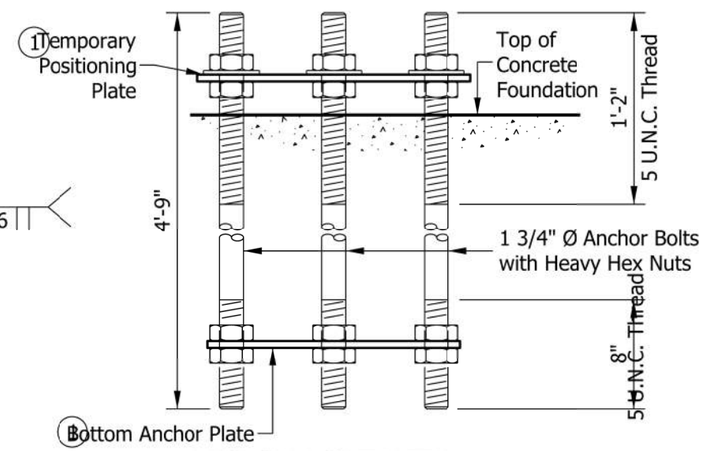

ANCHOR BOLT DETAILS
BEFORE CONCRETE PLACEMENT

NOTES:

1. Use temporary positioning plate and bottom anchor plate for all foundations. Temporary positioning plate should be removed after placing concrete.
2. Minimum base plate gap is 2 1/2 in. and can be increased up to 5 1/2 in. Metal skirt width shall be at least 1 1/2 in. more than the actual gap.
3. May use four separate 5 in. plates welded together to maintain angles and shape as shown.
4. May use two separate 3 in. and two separate 5 in. plates welded together to maintain angles and shape as shown.

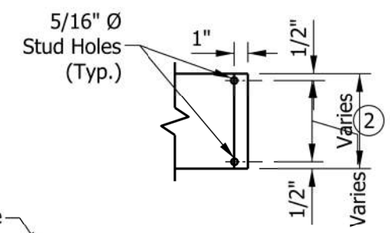

DETAIL G

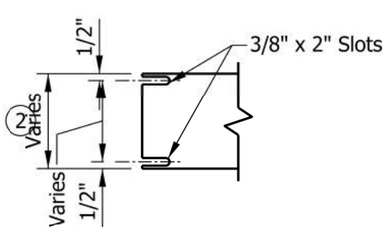

DETAIL H

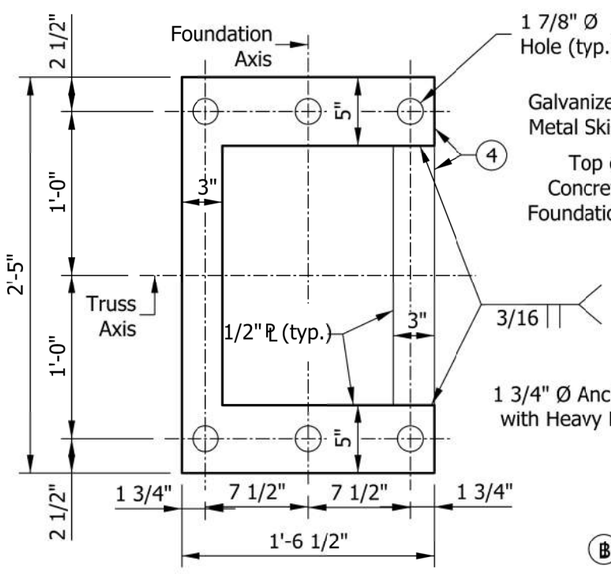

BOTTOM ANCHOR PLATE

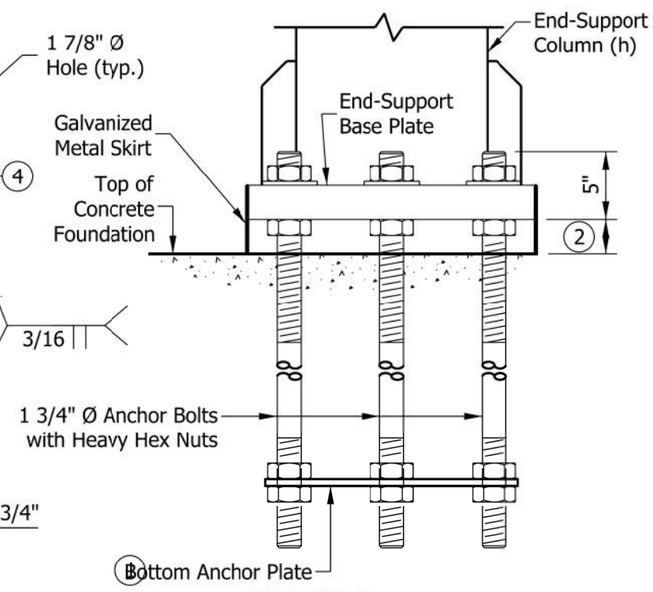

ANCHOR BOLT DETAILS
AFTER CONCRETE PLACEMENT

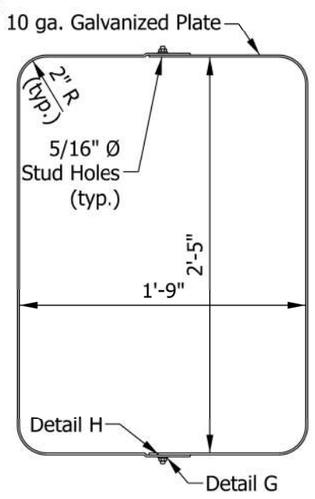

METAL SKIRT DETAIL

INDIANA DEPARTMENT OF TRANSPORTATION

SIGN BOX TRUSS STRUCTURE EXTENDED SPAN
END-SUPPORT
ANCHOR BOLT AND METAL SKIRT DETAILS

Eff. for Lettings on or After 03-01-20

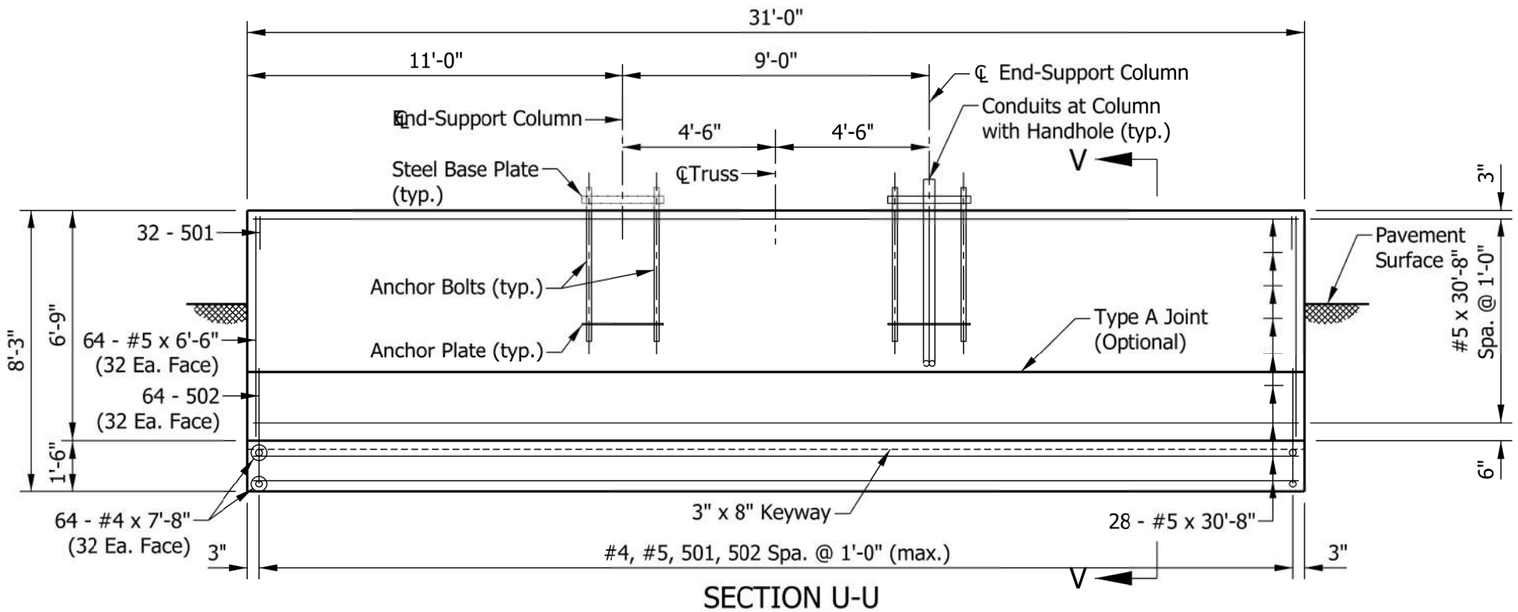

SECTION U-U

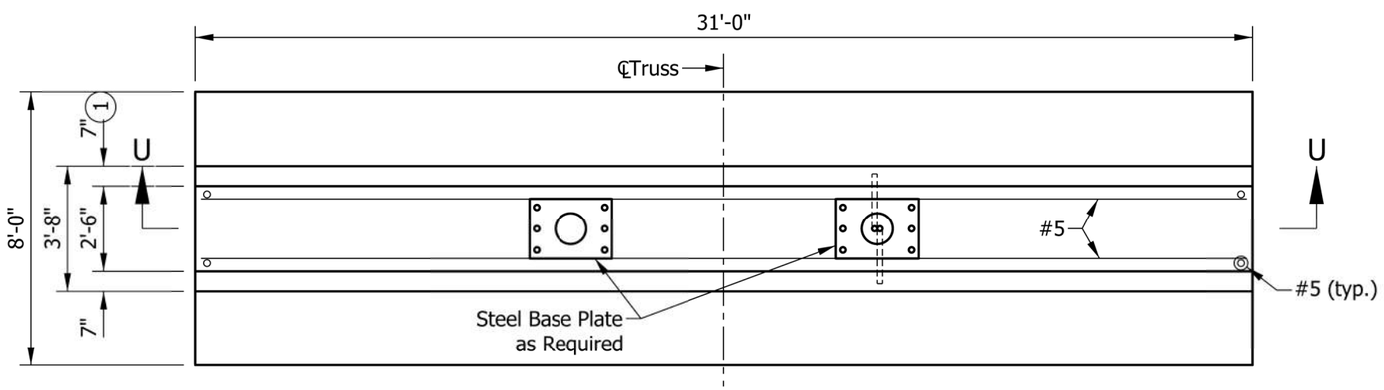

PLAN

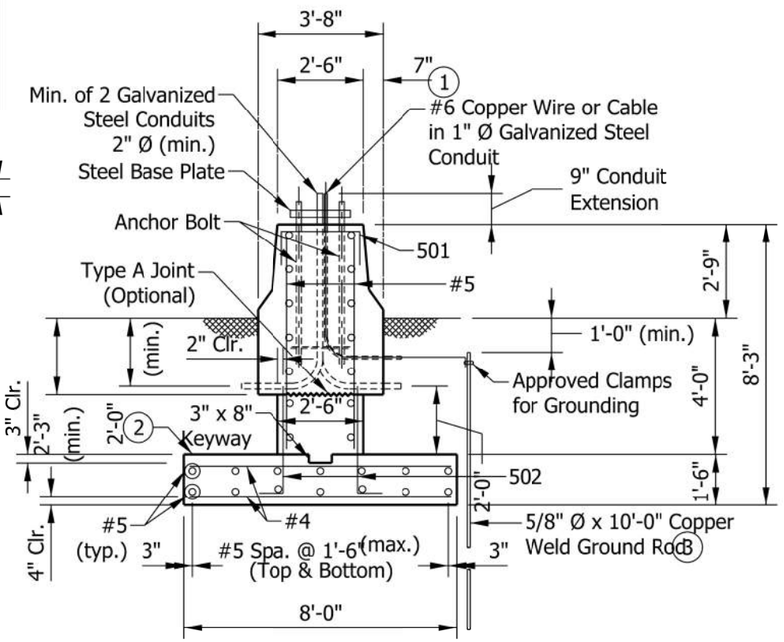

SECTION V-V

NOTES:

1. See Standard Drawing E 602-CCMB-03 for barrier wall width transition.
2. Top of the footing shall be a minimum of 4 ft. 0 in. below the pavement or ground surface.
3. Only one ground rod per structure is required.

INDIANA DEPARTMENT OF TRANSPORTATION

SIGN BOX TRUSS STRUCTURE EXTENDED SPAN
TYPE F, G, H SPREAD FOUNDATION
AT 33" CONCRETE BARRIER WALL

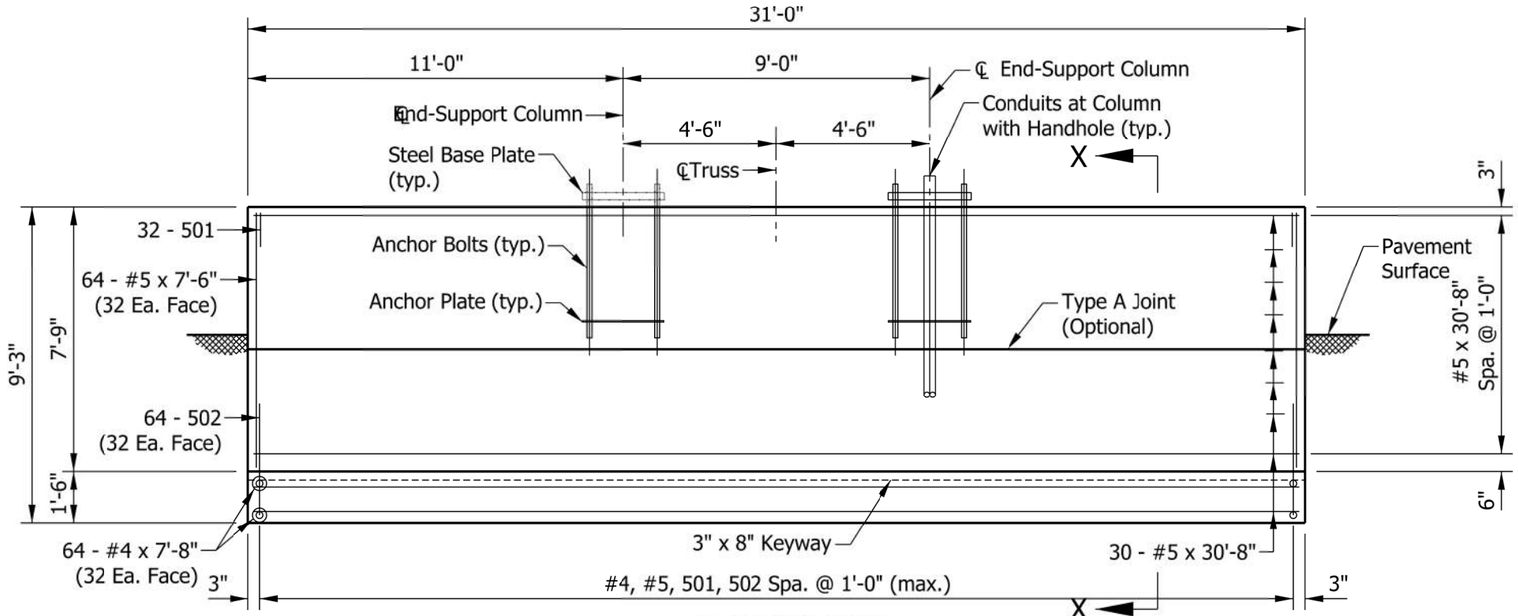

SECTION W-W

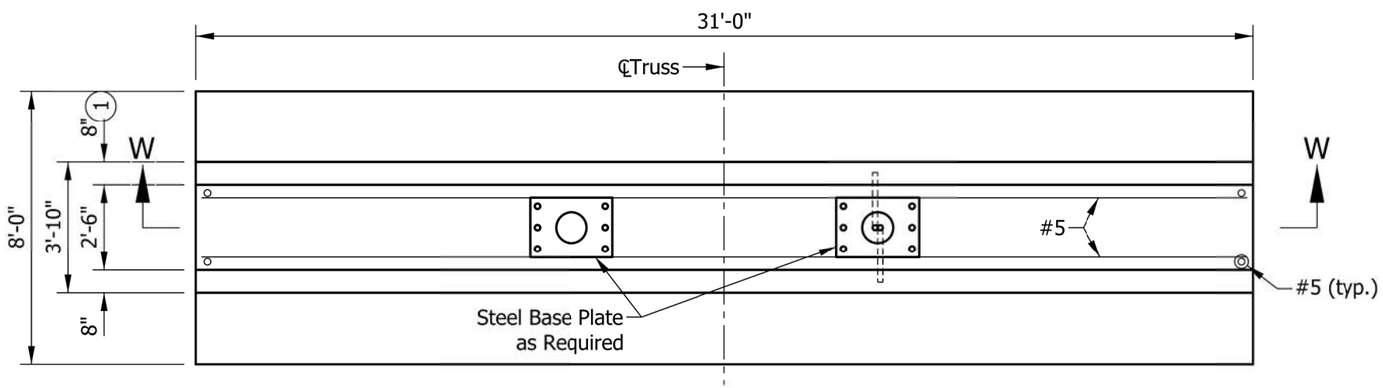

PLAN

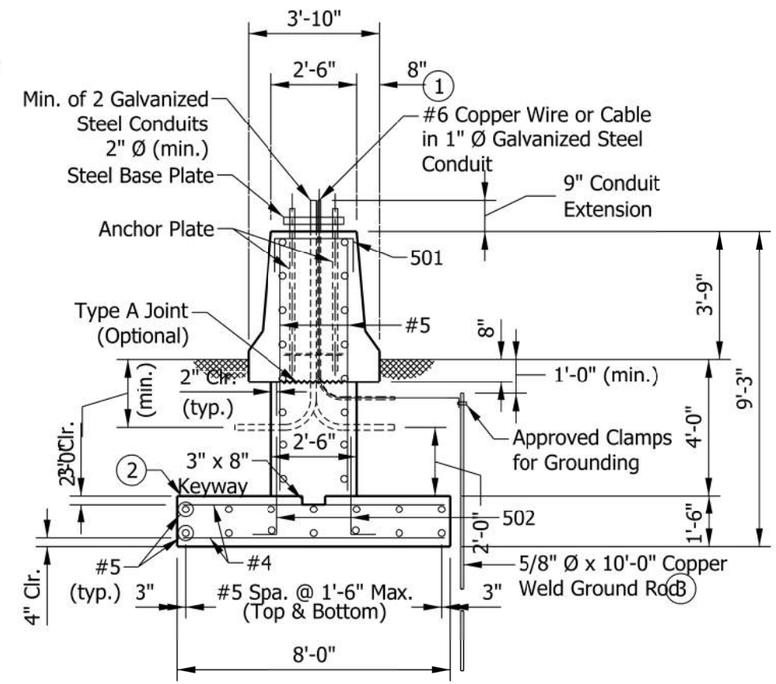

SECTION X-X

NOTES:

(1) See Standard Drawing E 602-CCMB-03 for barrier wall width transition.

(2) Top of the footing shall be a minimum of 4 ft. 0 in. below the pavement or ground surface.

(3) Only one ground rod per structure is required.

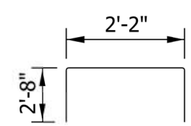

501 x 7'-6"

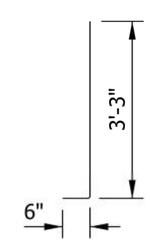

502 x 3'-9"

INDIANA DEPARTMENT OF TRANSPORTATION

SIGN BOX TRUSS STRUCTURE EXTENDED SPAN
TYPE F, G, H SPREAD FOUNDATION
AT 45" CONCRETE BARRIER WALL

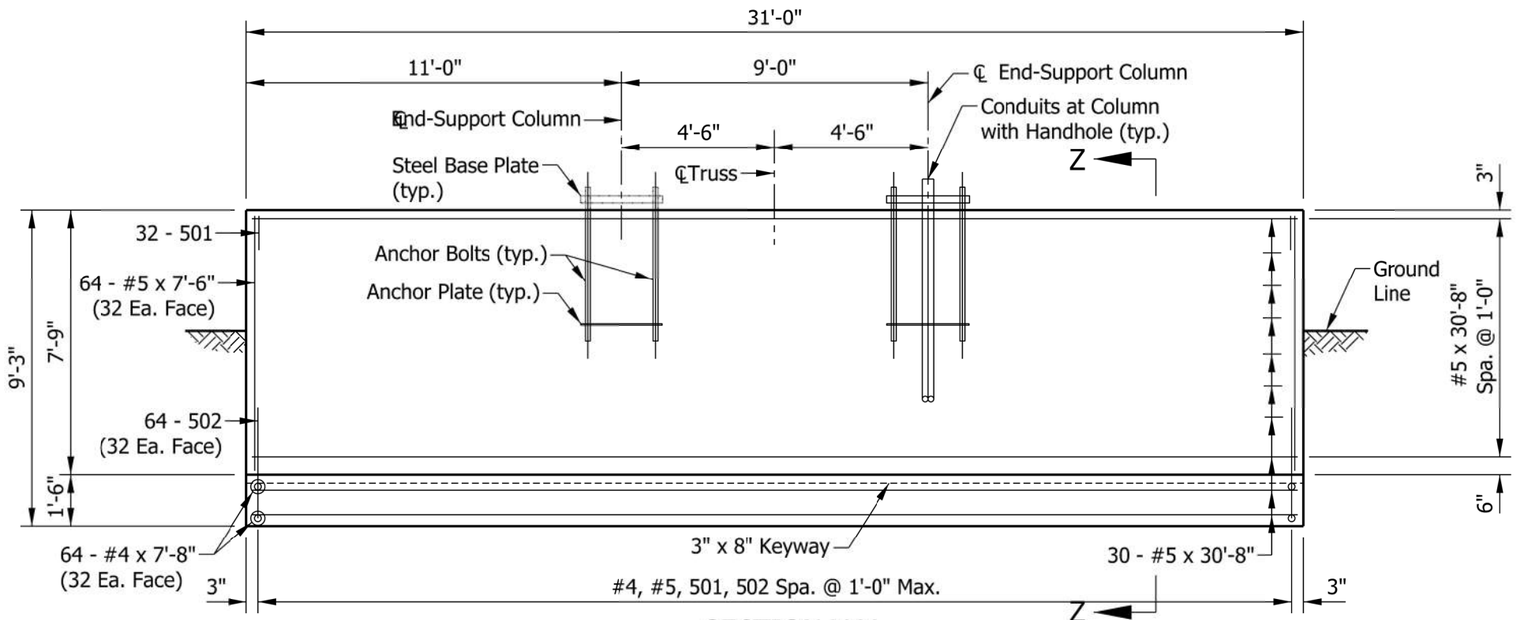

SECTION Y-Y

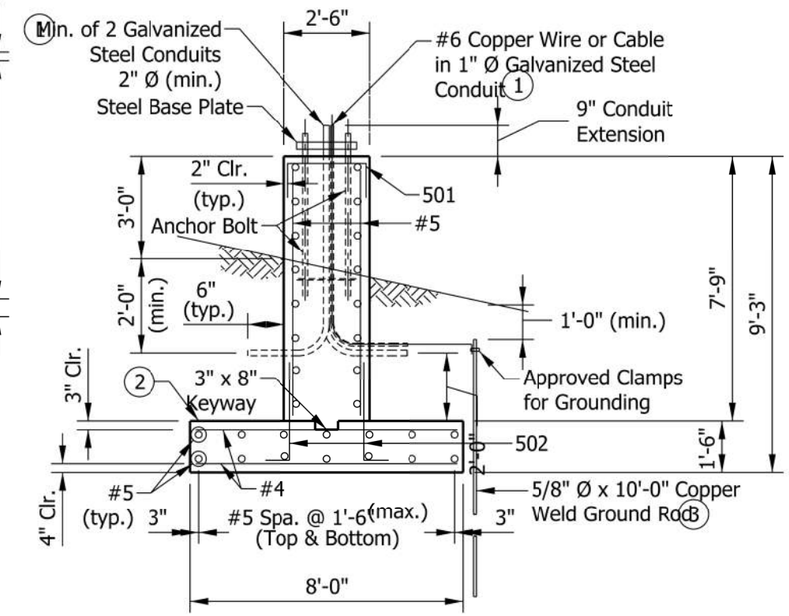

SECTION Z-Z

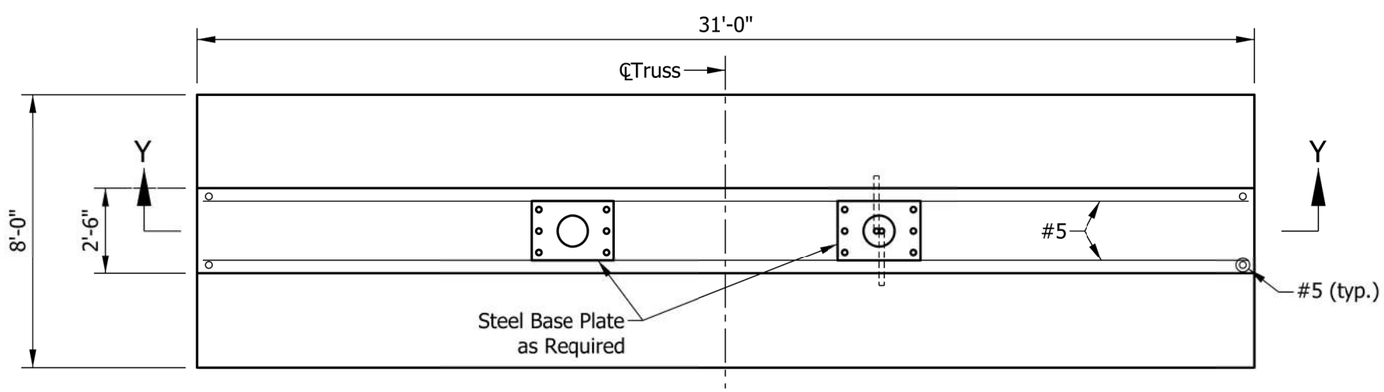

PLAN

NOTES:

1. Top of the footing shall be a minimum of 4 ft. 0 in. below the pavement or ground surface.
2. Only one ground rod per structure is required.

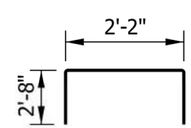

501 x 7'-6"

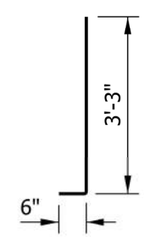

502 x 3'-9"

INDIANA DEPARTMENT OF TRANSPORTATION

SIGN BOX TRUSS STRUCTURE EXTENDED SPAN
TYPE F, G, H SPREAD FOUNDATION
FOR MEDIAN OR SHOULDER, 36" HEIGHT

SPREAD FOUNDATION AT 33" CONCRETE BARRIER WALL			
EPOXY-COATED REINFORCING BARS			
MARK OR SIZE	NO. OF BARS	LENGTH	WEIGHT
501	32	7'-6"	
502	64	3'-9"	
#5	64	6'-6"	
#5	28	30'-8"	
Total #5			1830 LBS
#4	64	7'-8"	
Total #4			328 LBS
Total Epoxy-Coated Reinforcing Bars			2158 LBS
CONCRETE, CLASS A			
Total Concrete, Class A			37.0 CYS
MISCELLANEOUS			
Surface Seal			28.5 SYS

SPREAD FOUNDATION AT 45" CONCRETE BARRIER WALL			
EPOXY-COATED REINFORCING BARS			
MARK OR SIZE	NO. OF BARS	LENGTH	WEIGHT
501	32	7'-6"	
502	64	3'-9"	
#5	64	7'-6"	
#5	30	30'-8"	
Total #5			1961 LBS
#4	64	7'-8"	
Total #4			328 LBS
Total Epoxy-Coated Reinforcing Bars			2289 LBS
CONCRETE, CLASS A			
Total Concrete, Class A			38.9 CYS
MISCELLANEOUS			
Surface Seal			35.4 SYS

SPREAD FOUNDATION FOR MEDIAN OR SHOULDER, 36" HEIGHT			
EPOXY-COATED REINFORCING BARS			
MARK OR SIZE	NO. OF BARS	LENGTH	WEIGHT
501	32	7'-6"	
502	64	3'-9"	
#5	64	7'-6"	
#5	30	30'-8"	
Total #5			1961 LBS
#4	64	7'-8"	
Total #4			328 LBS
Total Epoxy-Coated Reinforcing Bars			2289 LBS
CONCRETE, CLASS A			
Total Concrete, Class A			36.1 CYS
MISCELLANEOUS			
Surface Seal			29.2 SYS

INDIANA DEPARTMENT OF TRANSPORTATION

SIGN BOX TRUSS STRUCTURE EXTENDED SPAN
TYPE F, G, H SPREAD FOUNDATIONS
QUANTITIES

Eff. for Lettings on or After 03-01-20

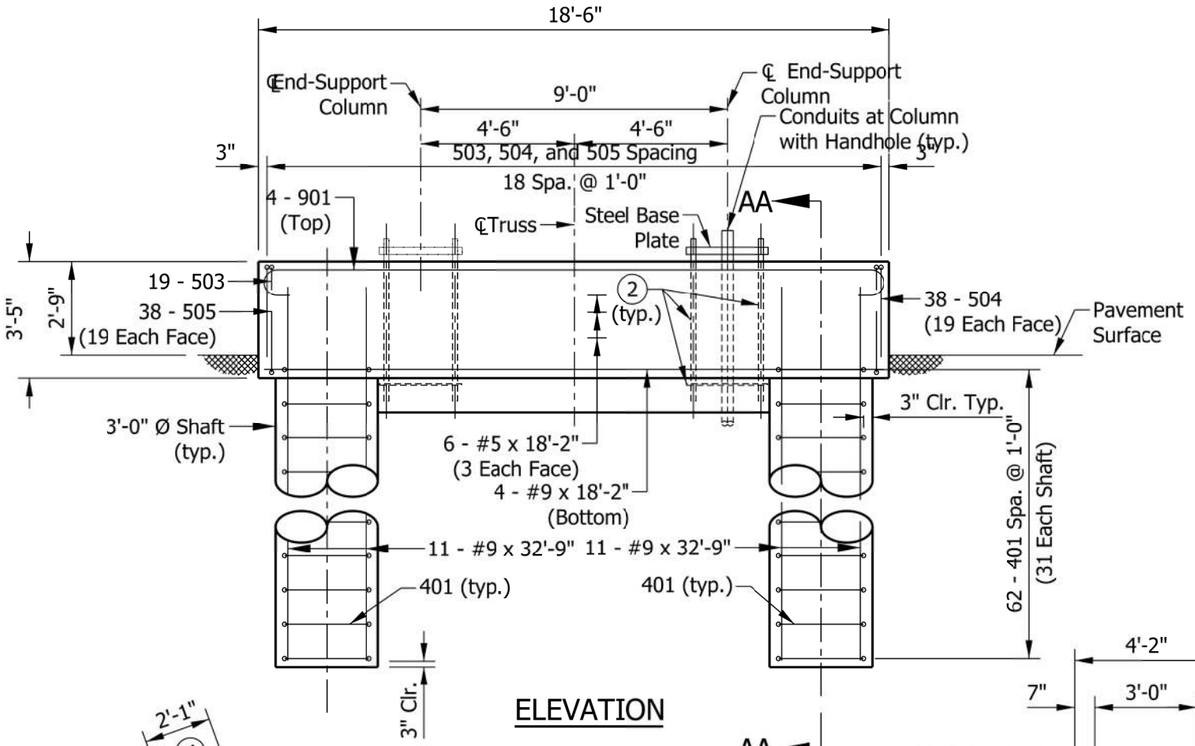

ELEVATION

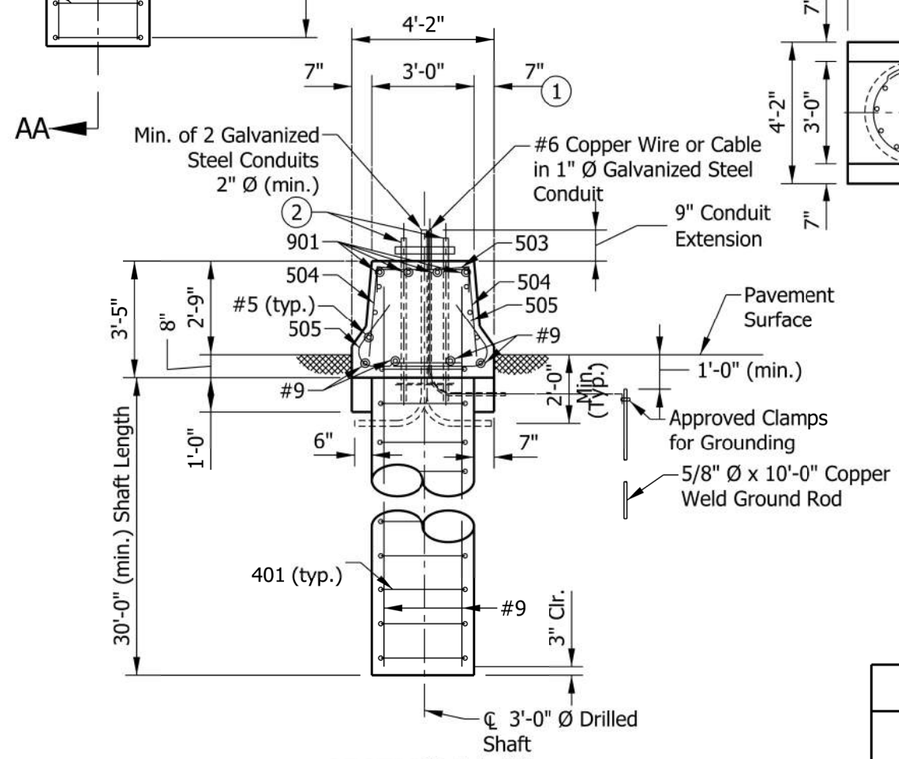

SECTION AA-AA

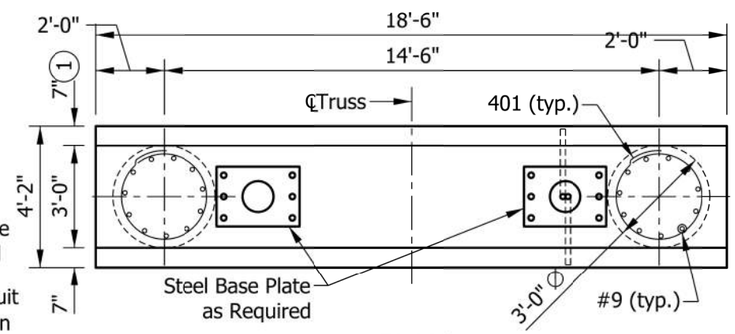

PLAN

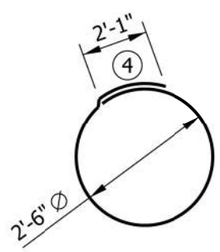

401 x 10'-0"

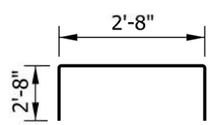

503 x 8'-0"

504 x 3'-4"

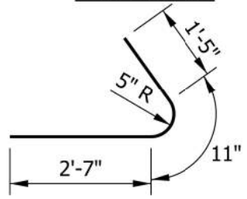

505 x 4'-11"

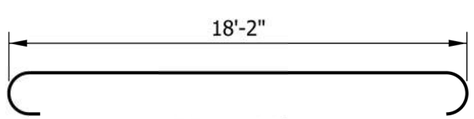

901 x 20'-8"

NOTES:

1. See Standard Drawing E 602-CCMB-03 for barrier wall width transition.
2. See sheet 13 for anchor bolt and anchor plate details.
3. See Standard Drawing E 703-BRST-01 for reinforcing-bar bending details and notes.
4. Lap splices must be staggered around shaft.

INDIANA DEPARTMENT OF TRANSPORTATION

SIGN BOX TRUSS STRUCTURE EXTENDED SPAN
TYPE F, G, H ALTERNATE DRILLED SHAFT
FOUNDATION AT 33" CONCRETE BARRIER WALL

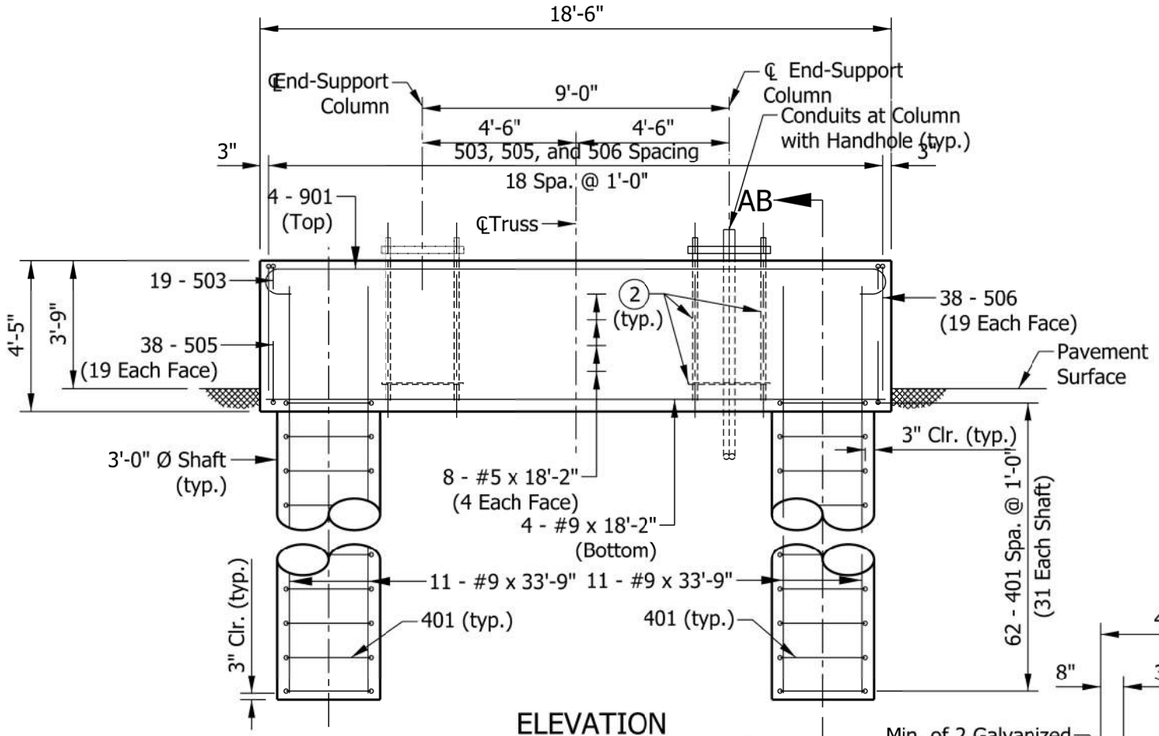

ELEVATION

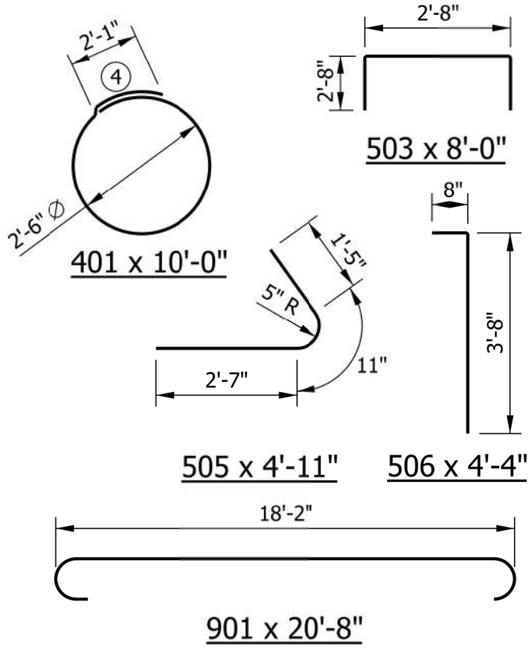

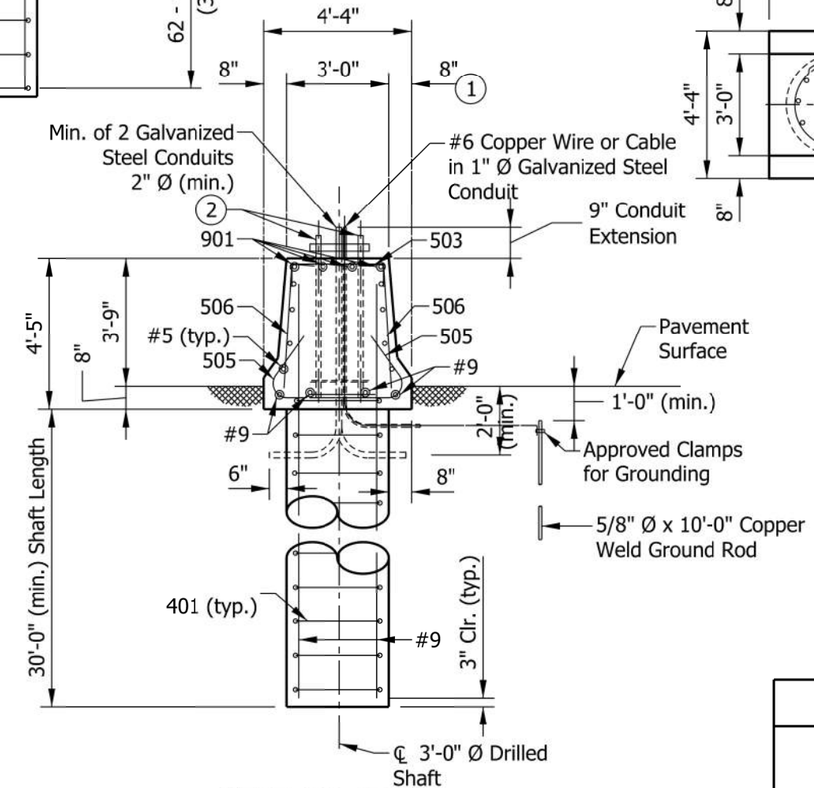

SECTION AB-AB

NOTES:

1. See Standard Drawing E 602-CCMB-03 for barrier wall width transition.
2. See sheet 13 for anchor bolt and anchor plate details.
3. See Standard Drawing E 703-BRST-01 for reinforcing-bar bending details and notes.
4. Lap splices must be staggered around shaft.

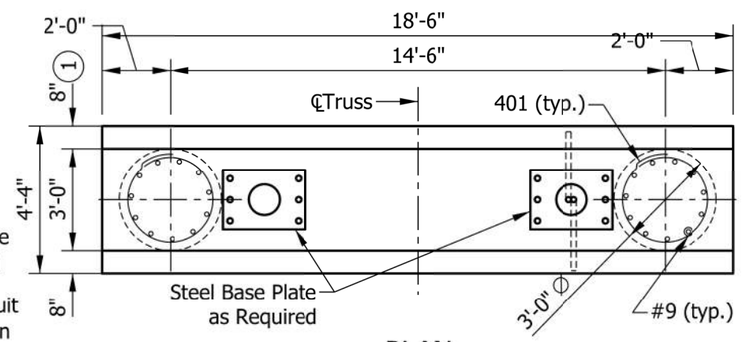

PLAN

INDIANA DEPARTMENT OF TRANSPORTATION

SIGN BOX TRUSS STRUCTURE EXTENDED SPAN
TYPE F, G, H ALTERNATE DRILLED SHAFT
FOUNDATION AT 45" CONCRETE BARRIER WALL

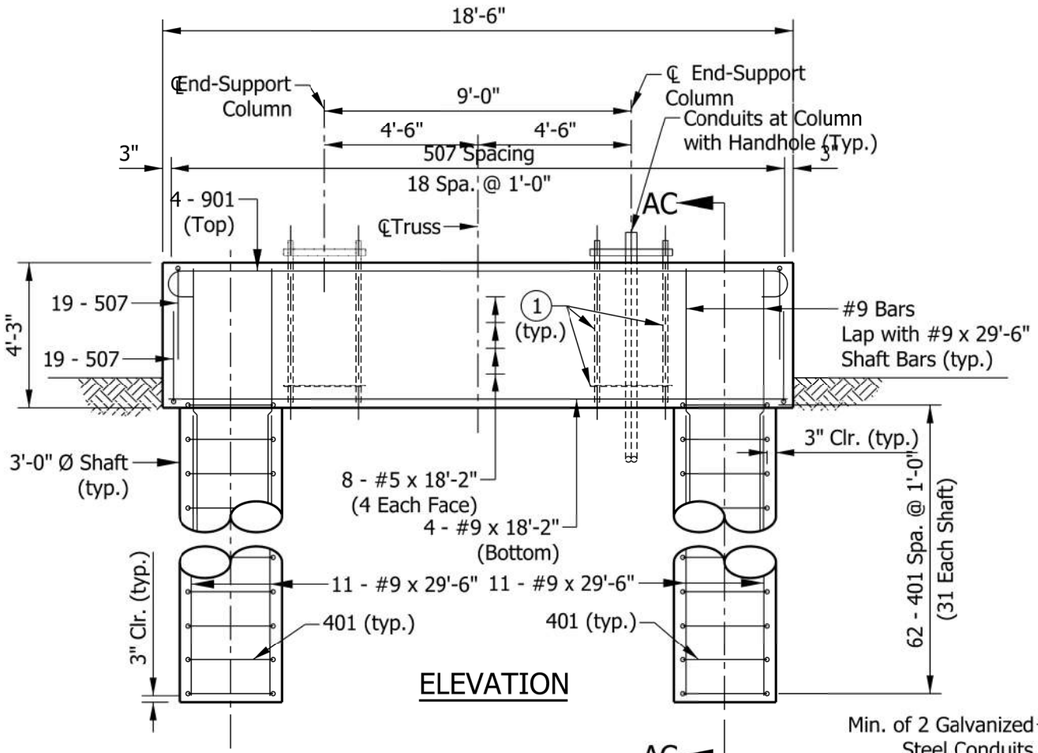

ELEVATION

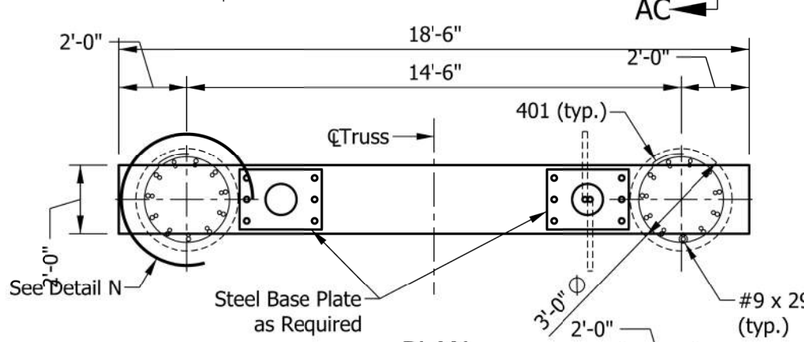

PLAN

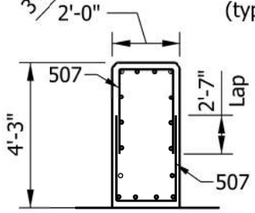

DETAIL O

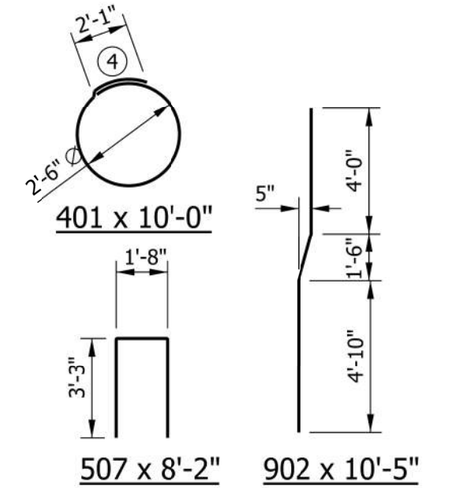

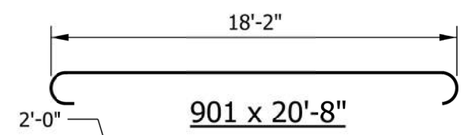

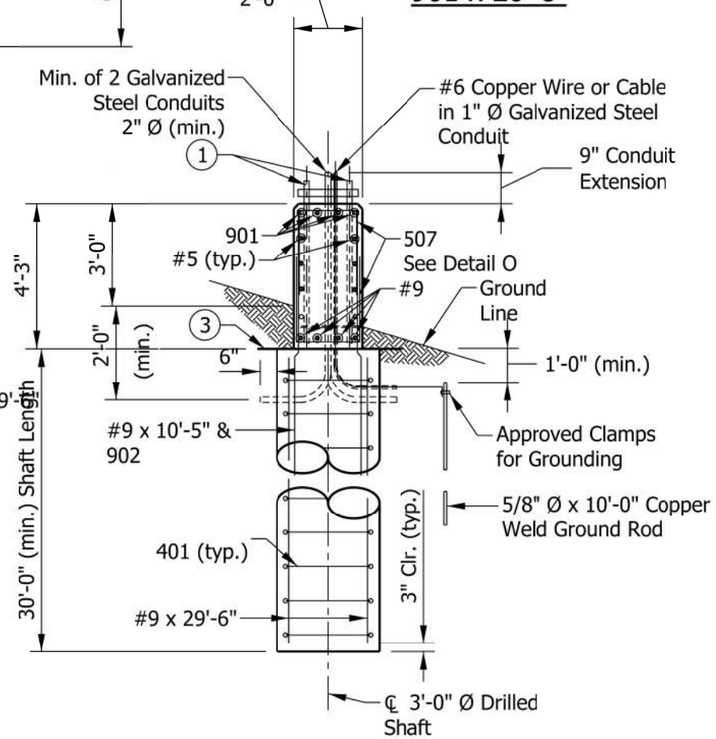

SECTION AC-AC

NOTES:

1. See sheet 13 for anchor bolt and anchor plate details.
2. See Standard Drawing E 703-BRST-01 for reinforcing-bar bending details and notes.
3. Top of foundation shall be level.
4. Lap splices must be staggered around shaft.

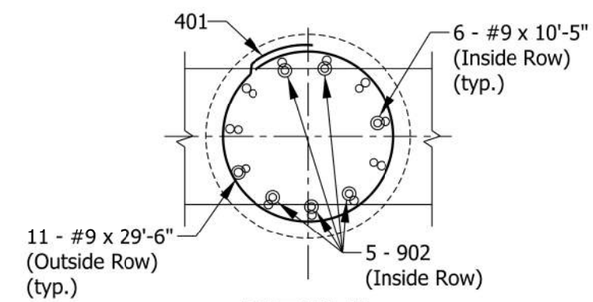

DETAIL N

INDIANA DEPARTMENT OF TRANSPORTATION

SIGN BOX TRUSS STRUCTURE EXTENDED SPAN TYPE F, G, H ALTERNATE DRILLED SHAFT FOUNDATION FOR MEDIAN OR SHOULDER, 36" HEIGHT

ALTERNATE DRILLED SHAFT FOUNDATION AT 33" CONCRETE BARRIER WALL			
EPOXY-COATED REINFORCING BARS			
MARK OR SIZE	NO. OF BARS	LENGTH	WEIGHT
901	4	20'-8"	
#9	4	18'-2"	
#9	22	32'-9"	
Total #9			2978 LBS
503	19	8'-0"	
504	38	3'-4"	
505	38	4'-11"	
#5	6	18'-2"	
Total #5			599 LBS
401	62	10'-0"	
Total #4			415 LBS
Total Epoxy-Coated Reinforcing Bars			3992 LBS
CONCRETE, CLASS A			
Total Concrete, Class A			25.2 CYS
MISCELLANEOUS			
Surface Seal			17.6 SYS

ALTERNATE DRILLED SHAFT FOUNDATION AT 45" CONCRETE BARRIER WALL			
EPOXY-COATED REINFORCING BARS			
MARK OR SIZE	NO. OF BARS	LENGTH	WEIGHT
901	4	20'-8"	
#9	4	18'-2"	
#9	22	33'-9"	
Total #9			3053 LBS
503	19	8'-0"	
505	38	4'-11"	
506	38	4'-4"	
#5	8	18'-2"	
Total #5			677 LBS
401	62	10'-0"	
Total #4			415 LBS
Total Epoxy-Coated Reinforcing Bars			4145 LBS
CONCRETE, CLASS A			
Total Concrete, Class A			26.0 CYS
MISCELLANEOUS			
Surface Seal			21.7 SYS

ALTERNATE DRILLED SHAFT FOUNDATION FOR MEDIAN OR SHOULDER, 36" HEIGHT			
EPOXY-COATED REINFORCING BARS			
MARK OR SIZE	NO. OF BARS	LENGTH	WEIGHT
901	4	20'-8"	
902	10	10'-5"	
#9	4	18'-2"	
#9	12	10'-5"	
#9	22	29'-6"	
Total #9			3514 LBS
507	38	8'-2"	
#5	8	18'-2"	
Total #5			475 LBS
401	62	10'-0"	
Total #4			415 LBS
Total Epoxy-Coated Reinforcing Bars			4404 LBS
CONCRETE, CLASS A			
Total Concrete, Class A			21.5 CYS
MISCELLANEOUS			
Surface Seal			21.6 SYS

INDIANA DEPARTMENT OF TRANSPORTATION

SIGN BOX TRUSS STRUCTURE EXTENDED SPAN
TYPE F, G, H ALTERNATE DRILLED SHAFT
FOUNDATIONS QUANTITIES

Eff. for Lettings on or After 03-01-20

INDIANA LOGO SIGNS

Description

This work shall consist of coordinating with Indiana Logo Sign Group, ILSG, regarding the removal or relocation of existing ILSG signs.

Materials

Materials shall be in accordance with 802.02.

Construction Requirements

The ILSG signs are the blue specific service panel signs that display individual logo panels for eligible businesses within the highway right-of-way. They are used to provide road users with business identification and directional information for gas, food, lodging, camping, and eligible attractions. The Contractor shall coordinate with ILSG regarding the timeline for the removal or relocation of the ILSG signs that are shown on the plans as being removed or relocated.

Removals and relocations of signs shall be in accordance with 802.09.

The Contractor shall contact the Office Administrator of the Indiana Logo Sign Group a minimum of five business days prior to the removal or relocation of ILSG signs.

Indiana Logo Sign Group
Attn: Lulu Rose, Office Administrator
600 E 96th St, Suite 460
Indianapolis, IN 46240
Phone:(800) 950-1093
Fax: (317) 495-9883

For ILSG sign relocations, the Contractor shall provide monthly updates to the Indiana Logo Sign Group on the estimated completion of the ILSG sign relocations. The Contractor shall remove, store, and relocate the existing sign, removing any existing wide flange foundation and install a new wide flange foundation at the new location.

For ILSG sign removals, the Contractor shall remove the sign, support, and foundation. The Contractor shall deliver the removed sign to a location designated by ILSG.

Method of Measurement

The removal or relocation of ILSG signs will be measured in accordance with 802.11.

Wide flange sign post support foundations will be measured in accordance with 802.11.

Basis of Payment

The removal or relocation of ILSG signs will be paid for in accordance with 802.12. No additional payment will be made for coordination work or delivery of removed ILSG signs.

Wide flange sign post support foundations will be paid for in accordance with 802.12.

HOOSIER HELPER PROGRAM SPONSORSHIP SIGNS

Description

This work shall consist of coordinating with the Department regarding the removal or relocation of existing Hoosier Helper Program Sponsorship Signs, HHPSS.

Materials

Materials shall be in accordance with 802.02.

Construction Requirements

The HHPSS are the blue background acknowledgement signs, approximately 10 ft by 6 ft, which identify State Farm as the sponsor of the Department's freeway service patrol program, the Hoosier Helpers. The Contractor shall coordinate with the Department regarding the timeline for the removal or relocation of the HHPSS that are shown on the plans as being removed or relocated.

Removals and relocations of signs shall be in accordance with 802.09.

The Contractor shall contact the Traffic Operations Division Director a minimum of five business days prior to the removal or relocation of HHPSS.

Indiana Department of Transportation
Attn: John McGregor, Traffic Operations Director
8620 E 21st St
Indianapolis, IN 46219
Phone:(317) 899-8617
Fax: (317) 898-0897

For HHPSS relocations, the Contractor shall provide monthly updates to the Traffic Operations Director on the estimated completion of the HHPSS relocations. The Contractor shall remove, store, and relocate the existing sign, removing any existing wide flange foundation and install a new wide flange foundation at the new location.

For HHPSS removals, the Contractor shall remove the sign, support, and foundation. The Contractor shall deliver the removed sign to a location designated by the Traffic Operations Director.

Method of Measurement

The removal or relocation of HHPSS will be measured in accordance with 802.11.

Wide flange sign post support foundations will be measured in accordance with 802.11.

Basis of Payment

The removal or relocation of HHPSS will be paid for in accordance with 802.12. No additional payment will be made for coordination work or delivery of removed HHPSS.

Wide flange sign post support foundations will be paid for in accordance with 802.12.

SPONSOR A HIGHWAY PROGRAM SIGNS

Description

This work shall consist of coordinating with the Department regarding the removal or relocation of existing Sponsor A Highway Signs, SAHS.

Materials

Materials shall be in accordance with 802.02.

Construction Requirements

The SAHS are the blue background acknowledgement signs, approximately 6 ft by 4 ft, which identify sponsors of the Department's litter removal services. The Contractor shall coordinate with the Department regarding the timeline for the removal or relocation of the SAHS that are shown on the plans as being removed or relocated.

Removals and relocations of signs shall be in accordance with 802.09.

The Contractor shall contact the Department's Roadside Maintenance Specialist a minimum of five business days prior to the removal or relocation of SAHS.

Indiana Department of Transportation
Attn: Matt Kraushar, Roadside Maintenance Specialist
100 N Senate Ave. Rm. N901
Indianapolis, IN 46204
Phone:(317) 232-5509
Fax: (317) 232-5551

For SAHS relocations, the Contractor shall provide monthly updates to the Roadside Maintenance Specialist on the estimated completion of the SAHS relocations. The Contractor shall remove, store, and relocate the existing sign.

For SAHS removals, the Contractor shall remove the sign, posts, and any foundations. The Contractor shall deliver the removed sign to a location designated by the Roadside Maintenance Specialist.

Method of Measurement

The removal or relocation of SAHS will be measured in accordance with 802.11.

Basis of Payment

The removal or relocation of SAHS will be paid for in accordance with 802.12. No additional payment will be made for coordination work or delivery of removed SAHS.

RADIO TRAFFIC INFORMATION SIGNS

This work shall consist of removing existing radio traffic information signs, RTIS. The Department terminated its highway advisory radio program in 2017. Any RTIS, which contain messages such as "ALERT WHEN FLASHING, TRAFFIC INFO TUNE TO AM 530" that are within the project limits shall be removed. The removal of RTIS will be measured as panel sign and wide flange support removals in accordance with 802.11 and paid for as panel sign and wide flange support removals in accordance with 802.12. The cost of removing the RTIS solar panel, flashing beacons, conduit, wiring, and ancillary equipment shall be included with the cost of the panel sign removal.

INDOT Approved Luminaire Models

Type	Manufacturer	Series	Model Number	Distribution Type	Light Loss Factor (@ 60,000 hrs)
High Mast	Holophane	HMLED	HMLED3 PK3 40K MVOLT G AW AO P7 PSC	V (symmetric)	0.75
High Mast	Holophane	HMLED	HMLED3 PK4 40K MVOLT G M AO P7 PSC	II & III (asymetric	0.75
High Mast	Philips	High Focus	HFL-184L 1050NW-G1-5M-UNN-DD-GY3	V (symmetric)	0.78
Roadway, High Lumen	Philips	Road Focus	RFL 215W96LED 4K-T-R2M	II	0.84
Roadway, High Lumen	Philips	Road Focus	RFL 215W96LED 4K-T-R3M	III	0.84
Roadway, High Lumen	Polybrite	Borealis	SL4240T3M40KGR05	II & III	0.74
Roadway, Low Lumen	Philips	Road Focus	RFM 160W48LED 4K-T-R2M	II	0.87
Roadway, Low Lumen	Philips	Road Focus	RFM 160W48LED 4K-T-R3M	III	0.87

Luminaire Models- Provisionally Approved

Type	Manufacturer	Series	Model Number	Distribution Type	Light Loss Factor (@ 60,000 hrs)
High Mast	GE	Evolve	ERHM02-80-VW-7-40	V	0.88
High Mast	GE	Evolve	ERHM02-70-B3740	II	0.88
High Mast	GE	Evolve	ERHM02-70-C3740	III	0.88
Roadway, High Lumen	American Electric Lighting	Autobahn	ATBL-E-XXX-R2	II	0.80
Roadway, High Lumen	American Electric Lighting	Autobahn	ATBL-E-XXX-R3	III	0.80
Roadway, High Lumen	Eaton	Verdeon	VERD-M-A04-E-U-T2-AP	II	0.82
Roadway, High Lumen	Eaton	Verdeon	VERD-M-A04-E-U-T3-AP	III	0.82
Roadway, High Lumen	GE	Evolve	ERL2-23 B340 T2	II	0.87
Roadway, High Lumen	GE	Evolve	ERL2-23 C340 T3	III	0.87
Roadway, High Lumen	Leotek	Green Cobra	GCL2 60G-MV-NW-2S	II	0.87
Roadway, High Lumen	Leotek	Green Cobra	GCL2 60G-MV-NW-3R	III	0.87
Roadway, Low Lumen	American Electric Lighting	Autobahn	ATBL-E-XXX-R2	II	0.80
Roadway, Low Lumen	American Electric Lighting	Autobahn	ATBL-E-XXX-R3	III	0.80
Roadway, Low Lumen	Eaton	Verdeon	VERD G A 02 EUT2	II	0.82
Roadway, Low Lumen	Eaton	Verdeon	VERD G A 02 EUT2	III	0.82
Roadway, Low Lumen	GE	Evolve	ERLH-13B 340 T2	II	0.87
Roadway, Low Lumen	GE	Evolve	ERLH-13C 340 T3	III	0.87
Roadway, Low Lumen- Low Mounting Height	American Electric Lighting	Autobahn	ATBM-H-XXX-R2	II & III	0.80
Roadway, Low Lumen- Low Mounting Height	Eaton	Verdeon	VERD G A 02 EUT2	II	0.82
Roadway, Low Lumen- Low Mounting Height	Eaton	Verdeon	VERD G A 02 EUT2	III	0.82
Roadway, Low Lumen- Low Mounting Height	GE	Evolve	ERLH-13B 340 T2	II	0.87
Roadway, Low Lumen- Low Mounting Height	GE	Evolve	ERLH-13C 340 T3	III	0.87
Roadway, Low Lumen- Low Mounting Height	Philips	Road Focus	RFM 160W48LED 4K-T-R2M	II	0.87
Roadway, Low Lumen- Low Mounting Height	Philips	Road Focus	RFM 160W48LED 4K-T-R3M	III	0.87
Underpass	GE	Evolve	EWNB-F4730	II & III	0.87
Underpass	Philips	Gardco	FX180-YAF NA 3NNS	II & III	0.84

Note: distribution types I and IV no longer used for any luminaire

Design Criteria for High Mast Tower

High Mast Towers shall be designed to satisfy the AASHTO *LRFD Standard Specifications for Structural Supports for Highway Signs, Luminaires and Traffic Signals, 1st Edition, 2015* and subsequent interims.

1. Dead Load – Pole Height 60 ft. to 125 ft.

Description of Load	Weight	Effective Projected Area
Lowering Device	415 lbs.	2.70 sft.
(6) Luminaires	324 lbs.	12.0 ft.

2. Dead Load – Pole Height 130 ft. to 200 ft.

Description of Load	Weight	Effective Projected Area
Lowering Device	415 lbs.	2.70 sft.
(12) Luminaires	648 lbs.	24.0 ft.

3. Wind Load.

Mean Recurrence Interval Risk Category = High
Wind Speed (1700-Year MRI Basic Wind Speed) = 120 mph
Wind Speed (10-Year MRI Gust Wind Speed) = 76 mph
Height and Exposure Factor, K_z = 1 for height less than or equal to 33 ft.

4. Ice Load

Ice load = 3 lb/ft^2. Ice is assumed to form around the entire surface of the structure's members.

The design shall include the following INDOT specific load combination in addition to the required load combinations specified in the Table 3.4-1.

Load Combination Limit State	Description	Dead Components (DC)	Wind (W)	Ice (IC)
Extreme II	Ice	Max 1.10/ Min 0.90	0.50*	1.0
*The wind load shall be based on the 120 mph basic wind speed.				

5. Fatigue Load

Fatigue Importance Factor, $I_F = 1.0$

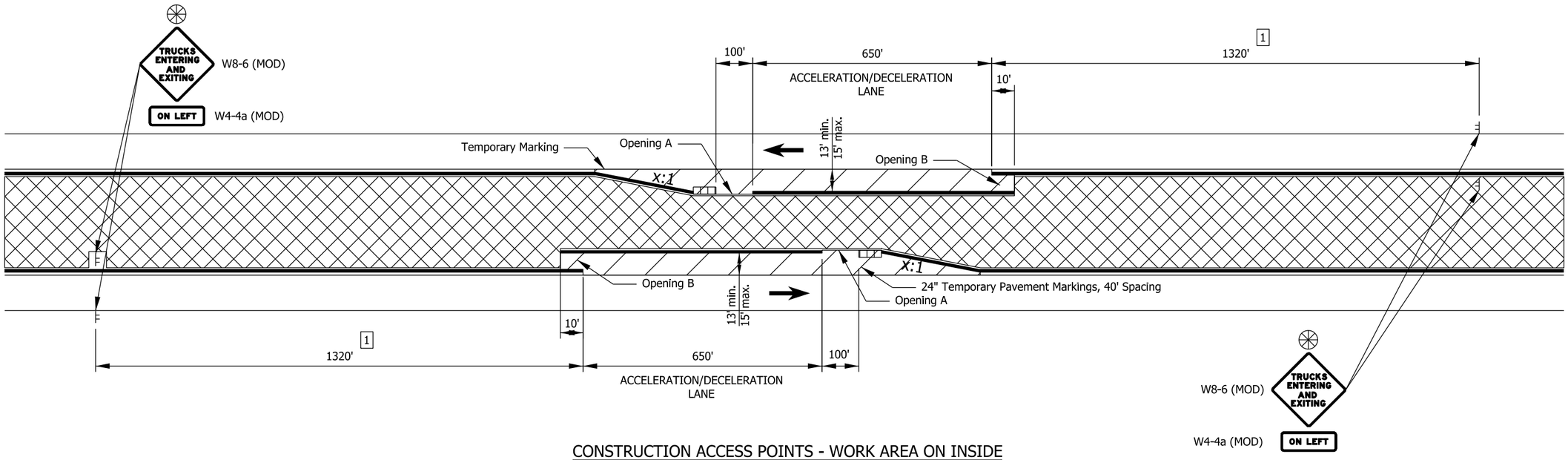

CONSTRUCTION ACCESS POINTS - WORK AREA ON INSIDE

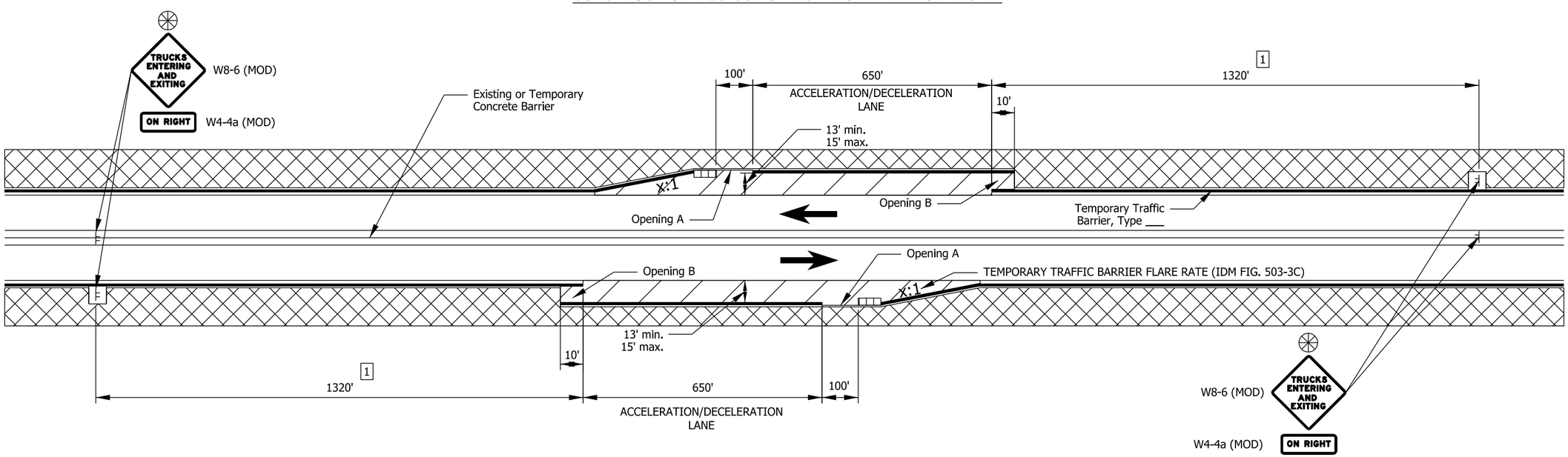

CONSTRUCTION ACCESS POINTS - WORK AREA ON OUTSIDE

LEGEND

- ENERGY ABSORBING TERMINAL, CZ, TL-2 OR TL-3
- Construction Sign
- Construction Warning Light, Type B
- Construction Area
- Direction of Traffic (Number of Lanes Vary)

RECOMMENDED FOR APPROVAL _____ DESIGN ENGINEER DATE

DESIGNED: _____ DRAWN: _____

CHECKED: _____ CHECKED: _____

INDIANA
DEPARTMENT OF TRANSPORTATION

CONSTRUCTION ACCESS POINTS DETAILS

HORIZONTAL SCALE	BRIDGE FILE
N/A	N/A
VERTICAL SCALE	DESIGNATION
N/A	1801695
SURVEY BOOK	SHEETS
	of
CONTRACT	PROJECT
R-41536	1801695

$FILE$
$DATE$

NOTES:

1. Sign spacing should be adjustied to avoid conflict with existing signs.

2. Construction Access Points shall be used in the following manner: Ingress shall be made by construction vehicles by changing lanes into the deceleration lane as early as possible, decelerating the construction vehicle using the deceleration lane, and then turning into Opening A to access the work area. Egress from the work area shall be made by construction vehicles by leaving the work area via Opening B, accelerating the construction vehicle within the acceleration lane (using as much length of the acceleration lane as possible), and then merging into the adjacent lane of traffic. Construction vehicles shall not swing out into adjacent lane of traffic when entering the work area. Repeated violations may result in closure of the access point.

3. Drums shall be placed across Construction Access Points during periods when no active work is occurring(evenings, days, weekends, extended shutdowns, etc). Drums shall be spaced every 20 feet across the opening.

4. All ingress and egress, adjacent to travel lanes, shall only occur at established construction access points including proper signing, acceleration and deceleration lane, and delineation.

5. Construction Access Point locations shall be selected for good sight distance and avoiding locations just beyond sharp horizontal curves and crest vertical curves, on overhead structures, on upgrades, within ½ mile in advance of an exit ramp or beyond an entrance ramp, etc. Minimum spacing for construction access points shall be 1.0 miles. In the event that the Engineer determines that an access point does not function in a safe manner, he/she shall order it immediately closed at no cost to the State. Access points may be relocated subject to the approval of the Engineer, as necessary to accomplish construction activities.

RECOMMENDED FOR APPROVAL _____ DESIGN ENGINEER DATE

DESIGNED: _____ DRAWN: _____

CHECKED: _____ CHECKED: _____

INDIANA
DEPARTMENT OF TRANSPORTATION

CONSTRUCTION ACCESS POINTS

HORIZONTAL SCALE	BRIDGE FILE
N/A	N/A
VERTICAL SCALE	DESIGNATION
N/A	1801695
SURVEY BOOK	SHEETS
	of
CONTRACT	PROJECT
R-41536	1801695

$FILE$
$DATE$

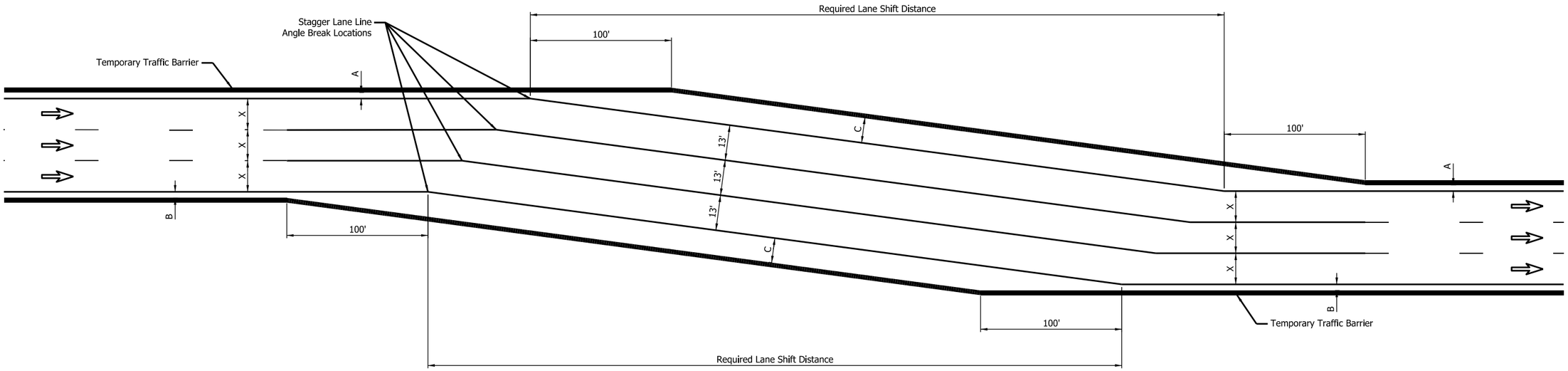

MULTI-LANE SHIFT TAPER

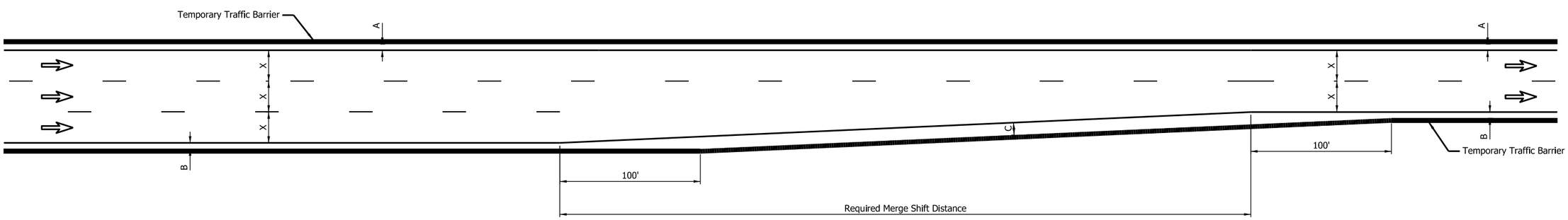

MERGING TAPER
(LEFT OR RIGHT LANE MERGE)

LEGEND

A - Inside Shoulder Width (2' min.)

B - Outside Shoulder Width (2' min.)

C - Lane Shift Shoulder Width in Shift/Merge (Varies)

X - MOT Lane Width

Direction of Traffic (# of Lanes Vary)

RECOMMENDED FOR APPROVAL _____ DESIGN ENGINEER DATE

DESIGNED: ALH DRAWN: ALH

CHECKED: TAH CHECKED: TAH

INDIANA
DEPARTMENT OF TRANSPORTATION

CONSTRUCTION LANE SHIFT TAPER
AND MERGING TAPER DETAILS

HORIZONTAL SCALE	BRIDGE FILE
N/A	N/A
VERTICAL SCALE	DESIGNATION
N/A	1801695
SURVEY BOOK	SHEETS
	of
CONTRACT	PROJECT
R-41536	1801695

Construction Lane Shift-Standard.dgn
2/17/2020

INDIANA DEPARTMENT OF TRANSPORTATION
Driving Indiana's Economic Growth

Traffic Management Center
8620 East 21st Street
Indianapolis, Indiana 46219

PHONE: (317) 899-8626
FAX: (317) 898-0897

Eric Holcomb, Governor
Joe McGuinness, Commissioner

March 4, 2020

TO: Jim Poturalski, Senior Director of Engineering & Research
Research & Development

THRU: Luis Laracuente, District Traffic Engineer
Greenfield District Traffic

FROM: Taylor Hartman, Traffic Staff Engineer
Greenfield District Traffic

SUBJECT: Interstate Highway Congestion Policy Exception Request
I-69 Section 6 Contract 5
I-465 in the Westbound/Eastbound direction(s) from I-65 to I-70 (MM 0.1 to MM 9.8 in Marion County)
Contract No. R-41536, Des. No. 1801695

We have reviewed the attached policy exception request and concur with the analyses presented.

IHCP Allowable Closure:	The policy allows a nighttime only (9 p.m. to 6 a.m.) single lane closure from I-65 to SR 37, and nighttime or weekend single lane closure from SR 37 to I-70
Requested Closures:	Single lane closure of Westbound/Eastbound I-465 from 8 p.m. to 5 a.m., Sunday through Thursday nights; from 9 p.m. to 5 a.m. Friday and Saturday nights Double lane closure of Westbound/Eastbound I-465 from 11 p.m. to 5 a.m., Sunday through Thursday nights; from 12 a.m. to 5 a.m. Friday and Saturday nights
Minimum Open Lanes:	1 lane(s) in Westbound/Eastbound direction will remain open during the closure period(s).
Anticipated Start of Closures:	Spring 2021
Expected Duration of Closure:	Fall 2024
Lane Width:	12 ft. minimum in 2021/2022; 11 ft. minimum in 2023/2024
Shoulder Width:	12 ft. standard, 4 ft minimum in 2021/2022; 2 ft. minimum in 2023/2024
Type of barrier used:	Construction Drums and Temporary Concrete Barrier

The analyses indicate that queue within policy limits is anticipated from this closure.

Policy Exception Approved:

Approvals include items in the Analysis and Justification portion of request and include 180 nights of lane restrictions in 2021/2022, ramp closures in 2023/2024, 20 minute traffic stoppages, and Marion County lane closures to modify overhead signs to accommodate I-465 closures under closure approvals. JMP 3/9/2020.

Jim Poturalski, Senior Director of Engineering & Research Date
Research & Development

Enclosures: Policy Exception Request, Queue Analysis

cc: John McGregor, Manager, Traffic Support Section, Indianapolis Traffic Management Center
Mischa Kachler, Supervisor, Work Zone Safety Section, Indianapolis Traffic Management Center
James Colonis, Director, Construction Division, Greenfield District
Valerie Cockrum, Director, Technical Services Division, Greenfield District
Pat Szewczak, Director, Highway Maintenance Division, Greenfield District
Rodger Keller, Manager, Design, Production Division, Greenfield District
Luis Laracuente, Manager, Traffic, Technical Services Division, Greenfield District
Ronald Heustis, Project Manager, Production Division; Innovative Project Delivery
Andy Detrick, District Public Information Officer, Innovative Project Delivery
Chad Nierman, Project Engineer, Greenfield District
Elsadig Ibrahim, Project Engineer, Greenfield District
Jason Rhoades, Project Manager, HNTB
Thomas Heustis, Principal Engineer, Parsons

INDIANA DEPARTMENT OF TRANSPORTATION
Driving Indiana's Economic Growth

Traffic Management Center
8620 East 21st Street
Indianapolis, Indiana 46219

PHONE: (317) 899-8610
FAX: (317) 898-0897

Eric Holcomb, Governor
Joe McGuinness, Commissioner

INTERSTATE HIGHWAYS CONGESTION POLICY
EXCEPTION REQUEST ANALYSIS AND JUSTIFICATION

RE: I-69 Section 6 Contract 5
I-465 in the Westbound/Eastbound direction(s) from I-65 to I-70 (MM 0.1 to MM 9.8 in Marion County)
Contract No. R-41536, Des. No. 1801695
Prime Contractor: TBD

NEED FOR WORK

In order to complete all necessary for the I-69 Section 6 Contract 5 project, single lane and double lane closures are required. The anticipated scope of work that will be completed under lane closure includes, but is not limited to, overhead bridge demolition/construction, temporary widening, shoulder strengthening, pavement patching, and material delivery.

In order to minimize impacts on this heavily traveled corridor, lane reductions will be limited to nighttime closures, 7 days a week. Closure hours are restricted to hours to keep queueing within policy limits. This work is planned for the entire 4 years of construction (spring 2021 through fall 2024). Lane reductions will be permitted on I-465 during the I-65/I-70 North Split project, which will detour traffic along this portion of I-465. Separate analysis for 2021-2022 and 2023-2024 is included in this request.

During the I-65/I-70 North Split project detour, the Design-Build Contractor will not be permitted to reduce lanes on I-465 for more than 180 nights in total. Multiple lane reductions along the corridor, regardless of direction of travel, will only count as a single occurrence towards the 180 night allowance.

The lane and ramp closure exception is separate from the Full Interstate Closure Request for I-465, which requires approval from FHWA.

PLANNED CLOSURES/RESTRICTIONS

Lane Reductions:
The following lane reductions/closures are planned for this project:

- Single lane closure of Westbound/Eastbound I-465 from 8 p.m. to 5 a.m., Sunday through Thursday nights; from 9 p.m. to 5 a.m. Friday and Saturday nights
- Double lane closure of Westbound/Eastbound I-465 from 11 p.m. to 5 a.m., Sunday through Thursday nights; from 12 a.m. to 5 a.m. Friday and Saturday nights

These closures are anticipated to begin spring 2021 and last until fall 2024 (four construction seasons). During the I-65/I-70 North Split project detour, which is anticipated to be during the 2021 and 2022 construction seasons, the Design-Build Contractor will not be permitted to reduce lanes on I-465 for more than 180 nights in total. Multiple lane reductions along the corridor, regardless of direction of travel, will only count as a single occurrence towards the 180 night allowance.

After traffic is no longer detoured through this stretch of I-465, the Design-Build Contractor will be permitted to use lane reduction allowances every night, however the frequency of lane reductions is unknown at this time and will be finalized by the Design-Build Contractor after the project is awarded.

ANALYSIS

Traffic impacts due to the closures were analyzed using INDOT's Queue Analysis Spreadsheet (version 1.29). The traffic volumes used in the analysis were obtained from INDOT's Traffic Count Database System (TCDS). The counts were taken from Location ID 978310 on 8/14/2018 for the segment of I-465 from I-65 to US 31 on the southside of Indianapolis. The capacity used in the analysis is the Highway Capacity Manual's typical value adjusted for the proximity of the work to the travel lane resulting in 1760 PCE/Hr/Ln for a single lane reduction (3 lanes to 2 lanes), and a 1623 PCE/Hr/Ln for a double lane reduction (3 lanes to 1 lane). This capacity corresponds to a 12'-11' ft. lane width.

Two separate analyses were completed for this project. The first analysis is for the years 2021 and 2022, where additional traffic will be detour along this stretch of I-465 during the I-65/I-70 North Split project. Traffic forecasting predicts an increase in volumes by 23% during this time, and traffic counts from TCDS have been adjusted accordingly for this portion of the analysis. Also, the construction zone speed limit during this time will remain 55 mph and lane widths will remain 12'. Shoulders will be maintained at 4' min left and 12' min. right.

The second analysis is for the years 2023 and 2024, when the majority of heavy construction on I-465 is anticipated. Construction zone speed limit will be reduced to 45 mph posted and shoulders will be reduced to a 2' minimum during this time.

The analyses indicate that queue within policy limits should be anticipated as a result of this work. The results indicate that a maximum queue length of approximately 0.4 miles may be experienced for a maximum of 1 hour on Friday night at midnight (12 a.m.) in the Eastbound direction. The results indicate that a maximum queue length of approximately 0.1 miles may be experienced for a maximum of 1 hour on Friday evening at 4 p.m. in the Westbound direction. Please see the attached analyses and charts for further details on the queue modeling.

Additional lane reductions will be required to place/mount/remove all necessary signs for detours and notifications. The Design-Build Contractor will be allowed to restrict lanes on any

interstate in/around Marion County as directed by INDOT nightly between 10 p.m. and 5 a.m. Ramps may be restricted but not fully closed unless prior approval is received from the project engineer. They are expected to restrict no more than half of the lanes (rounded up) in a given segment. Each restriction is expected to be short in duration and signs are expected to be covered until appropriate the night before a full closure and then uncovered within the same evening.

Ramp Closures:
The following service ramp closures are planned for this project:

Ramp	**Number of Days Permitted to Close**
Mann Road Entrance Ramp to I-465 EB (Closure 1, from intersection with Mann Road to I-465 EB)	60
Mann Road Entrance Ramp to I-465 EB (Closure 2, from intersection with Mann Road to I-465 EB)	15
I-465 WB Exit Ramp to Mann Road (from I-465 WB to intersection with Mann Road)	60
I-465 EB Exit Ramp to SR 37/Harding Street (from I-465 EB to intersection with SR 37/Harding Street)	30
I-465 WB Exit Ramp to SR 37/Harding Street (from I-465 WB to intersection with SR 37/Harding Street)	30
SR 37/Harding Street Entrance Ramp to I-465 EB (from intersection with SR 37/Harding Street to I-465 EB)	30
SR 37/Harding Street Entrance Ramp to I-465 WB (from Sta. intersection with SR 37/Harding Street to I-465 WB)	30
East Street SB to I-465 WB Entrance Ramp (from painted gore nose of exit from East Street SB to painted gore nose of entrance to I-465 WB	595

For each ramp closure, traffic will be detoured to an adjacent service interchange and then onto local roadways to reach their destination. Signed detour routes will be implemented for each ramp closure and the Design-Build contractor will be required to notify INDOT at least 28 days in advance of any planned closure lasting more than 2 weeks. The Design-Build Contractor will also be required to analyze all intersections along the detour route to investigate the need to modifications to existing traffic signals and placement of temporary signals.

Temporary Traffic Stoppages:

The Design-Build Contractor will be permitted to utilize temporary traffic stoppages that meet the requirements of INDOT Standard Specifications Section 801.16(c). These 20-minute stoppages are required due to close interchange spacing on I-465 in this urban area. As such, rolling closures would not create a large enough gap in traffic to allow for construction activities such as beam placement/removal.

INDOT's construction staff has done several lane closures, ramp closures, and temporary traffic stoppages similar to these; and will be working closely with the TMC to assure that minimal congestion in the work zone is achieved.

SELECTED WORK SCHEDULE

The permitted lane reduction hours were derived by adjusting the number of lanes open to comply with policy limits. Whereas the project schedule is not known at this time, it is necessary to provide permitted lane reduction times to allow the contractor to complete the required work as efficiently as possible.

ABBREVIATED TRANSPORTATION MANAGEMENT PLAN (TMP)

The following Abbreviated TMP will be followed throughout the construction of this project:

Traffic Control Plan (TCP)

The following is an outline of the TCP:

- The PE/PS (or the Contractor if so designated by the PE/PS) will notify the TMC at least 3-days ahead of any MOT change so that the appropriate ATIS messages (if available) can be displayed to inform motorists of the upcoming closure and for general information concerning the status of traffic operations on the Interstate Highways. The E-mail addresses for these notifications are: indpc@isp.IN.gov and indytmc@indot.IN.gov. The PE/PS (or the Contractor if so designed by the PE/PS) shall call the TMC (317-899-8690x1) immediately prior to implementing any lane or shoulder restriction as a final notification and to provide project contacts / phone numbers that will be available for the duration of the restriction.
- All lane or shoulder restrictions will be closed and/or shifted in accordance with the IMUTCD and INDOT Specifications 105, 107 and 801.
- Unless explicitly stated otherwise in this Approval, Recurring Special Provision 108-C-585, which concerns holiday closures, will be followed.
- PCMS's shall be installed, in series, 2-minimum in each direction for each lane restriction to fully advise motorists of the excessive queues in accordance with the *INDOT Guidelines for Portable Changeable Message Signs (PCMS)*. The guidelines can

be found at: http://www.in.gov/dot/div/contracts/design/PCMS.pdf. Great care should be used to monitor the excessive queues and place the PCMS's in advance of the observed queues to mitigate the risk to all stakeholders.

- PCMS's shall be installed in accordance with the *INDOT Guidelines for Portable Changeable Message Signs (PCMS)*. The guidelines can be found at: http://www.in.gov/dot/div/contracts/design/PCMS.pdf. Care should be used to monitor the excessive queues and place the PCMS's in advance of the observed queues to mitigate the risk to all stakeholders.
- 'Watch for Stopped Traffic' signs shall be placed in advance of the queue.
- The inside and outside shoulders may be utilized for maintaining traffic in accordance with the plans.
- The PE/PS is encouraged to consider the use of ISP support for the work zone as they may be beneficial and protect motorists and workers. Requests should be made as soon as restriction dates are known – at least 3-days in advance of the lane restrictions. Contact Kim Peters (317-899-8619 / kpeters@indot.IN.gov) or Guy Boruff (317-899-8605 / gboruff@insot.IN.gov) to make these requests.

Traffic Operations Plan (TOP)

Lane restriction information will be transmitted by TMC to ITS boards in advance of this area and will notify motorists of the work, well in advance of the closure, as ITS boards are available.

Public Information

Simultaneous to the TMC notification noted above, the PE/PS (or the Contractor if so designated by the PE/PS) shall notify the INDOT District Media Contact responsible for the area of the restriction at least 3-days in advance of the closure. The Media Contacts can be found at www.media.indot.in.gov which redirects to www.in.gov/indot/2364.htm. They will insure that local television news channels, radio stations and newspapers will be notified of this construction. Local commuters will be advised to avoid this area and use alternative local routes if possible. They will also insure that the Indiana Motor Trucking Association is notified to minimize the number of trucks that will use these detour routes.

The Design-Build Contractor will develop a TMP, including a TCP, TOP, and Public Information plan as part of this project.

Prepared by:

Thomas Heustis, P.E.
Principal Engineer
Phone Number: 317-616-4682
Email: thomas.heustis@parsons.com

Reviewed by:

Taylor Hartman, Traffic Staff Engineer
Greenfield District Traffic
Phone Number: 317-467-3943
Email: thartman@indot.in.gov

Department Comments:

INDIANA DEPARTMENT OF TRANSPORTATION

Report for IHCP Queuing Analysis

Prepared by:	**Thomas Heustis**	Position:	**Principal Engineer**
Prepared for:	**Taylor Hartman**	Position:	**Greenfield Traffic Engineer**

Work Zone Information

Route:	I-465 (2021 thru 2022)
Mile marker:	MM 0.1 to 9.8
Positive Direction:	West
Contract:	R-41536
Work Year:	2022
Work Month:	JUN
Work Type:	Design
Work Description:	Overnight Work
Permanent Speed Limit:	55 mph
Work Zone Speed Limit:	55 mph
Workzone Lane Width:	12 ft
Channelizing Devices:	Mixture of Construction Drums, Cones and Barrier Wall.
Additional Information:	On I-465 from I-65 to I-70 in 2021 and 2022, during the I-65/I-70 North Split Project. Note that traffic counts are escalated by 23% to account for additional traffic detoured on this stretch of I-465.

Queuing Formula

$$L = L_0 + \frac{(V - C) * 1\,hr}{(k * N)}$$

Where:

- L= Length of Queue for Specified Hour (mi)
- L_0= Length of Queue in the Hour Prior to Specified Hour (mi)
- V= Hourly Volume (PCE/hr)
- C= Hourly Capacity (PCE/hr)
- k= Jam Density (PCE/mi/lane)
- N= Number of Storage Lanes Upstream of Restriction (lanes)

Jam Density (k)=	190 PCE/mi/ln
N for EB=	3 ln
N for WB=	3 ln

Traffic Information

Count Information	Count Station Number:	978310
	Month, Year of Count:	AUG, 2018
	Rural/Urban:	Urban

Weekend Adjustment Factors

Values from "Hourly Day of the Week Conversion Factors.xlsx" downloaded on 12/4/2019

Factors to Adjust Counts to Annual Value in Current Year

Annual Adj. Factor:	1.0201
Monthly Adj. Factor:	0.953

Factors to Project Annual Value in Current Year to Work Month and Year

Annual Adj. Factor:	1.020
Monthly Adj. Factor:	0.94

Assumed Percent Reduction of Traffic Due to Detouring

Eastbound

Monday-Thursday:	0%
Friday:	0%
Saturday-Sunday:	0%

Westbound

Monday-Thursday:	0%
Friday:	0%
Saturday-Sunday:	0%

Traffic Volumes

Time	Eastbound Volumes (PCE/hr)				Westbound Volumes (PCE/hr)			
	Weekday	Friday	Saturday	Sunday	Weekday	Friday	Saturday	Sunday
Midnight to 1 am	1265	1572	1879	1501	1125	1398	1672	1335
1 am to 2 am	869	1067	1058	878	832	1022	1013	841
2 am to 3 am	917	1043	939	750	730	830	748	598
3 am to 4 am	1045	1202	911	648	793	913	692	492
4 am to 5 am	1659	1624	1108	556	1362	1333	909	456
5 am to 6 am	2950	2812	1492	756	2651	2527	1341	679
6 am to 7 am	5380	5151	2038	1013	4793	4589	1815	902
7 am to 8 am	6628	6445	2373	1087	6625	6442	2372	1087
8 am to 9 am	6341	6267	3678	1593	5997	5927	3479	1507
9 am to 10 am	5363	5596	4544	2418	4704	4908	3986	2121
10 am to 11 am	4970	5222	4627	3503	4354	4575	4054	3069
11 am to Noon	4907	5482	4797	3967	4398	4913	4299	3555
Noon to 1 pm	5222	5891	4966	4627	4445	5014	4227	3938
1 pm to 2 pm	5212	5906	4795	4493	4531	5134	4168	3906
2 pm to 3 pm	5777	6669	4905	4560	5199	6003	4415	4104
3 pm to 4 pm	6635	7399	4616	4468	6256	6976	4353	4213
4 pm to 5 pm	6768	7579	4327	4173	6685	7486	4274	4122
5 pm to 6 pm	6609	6991	4192	4103	6292	6656	3991	3906
6 pm to 7 pm	5558	6502	4696	4304	4625	5410	3908	3581
7 pm to 8 pm	4191	5098	4229	3990	3467	4218	3498	3301
8 pm to 9 pm	3375	4059	3728	3090	2908	3498	3212	2662
9 pm to 10 pm	2779	3203	3081	2264	2411	2779	2673	1964
10 pm to 11 pm	2021	2604	2461	1604	1874	2415	2283	1488
11 pm to Midnight	1558	2181	1898	1273	1619	2266	1972	1323

Note: All Traffic Volumes are in PCEs/hr as defined in the IHCP.

Traffic Volumes

Eastbound Volumes

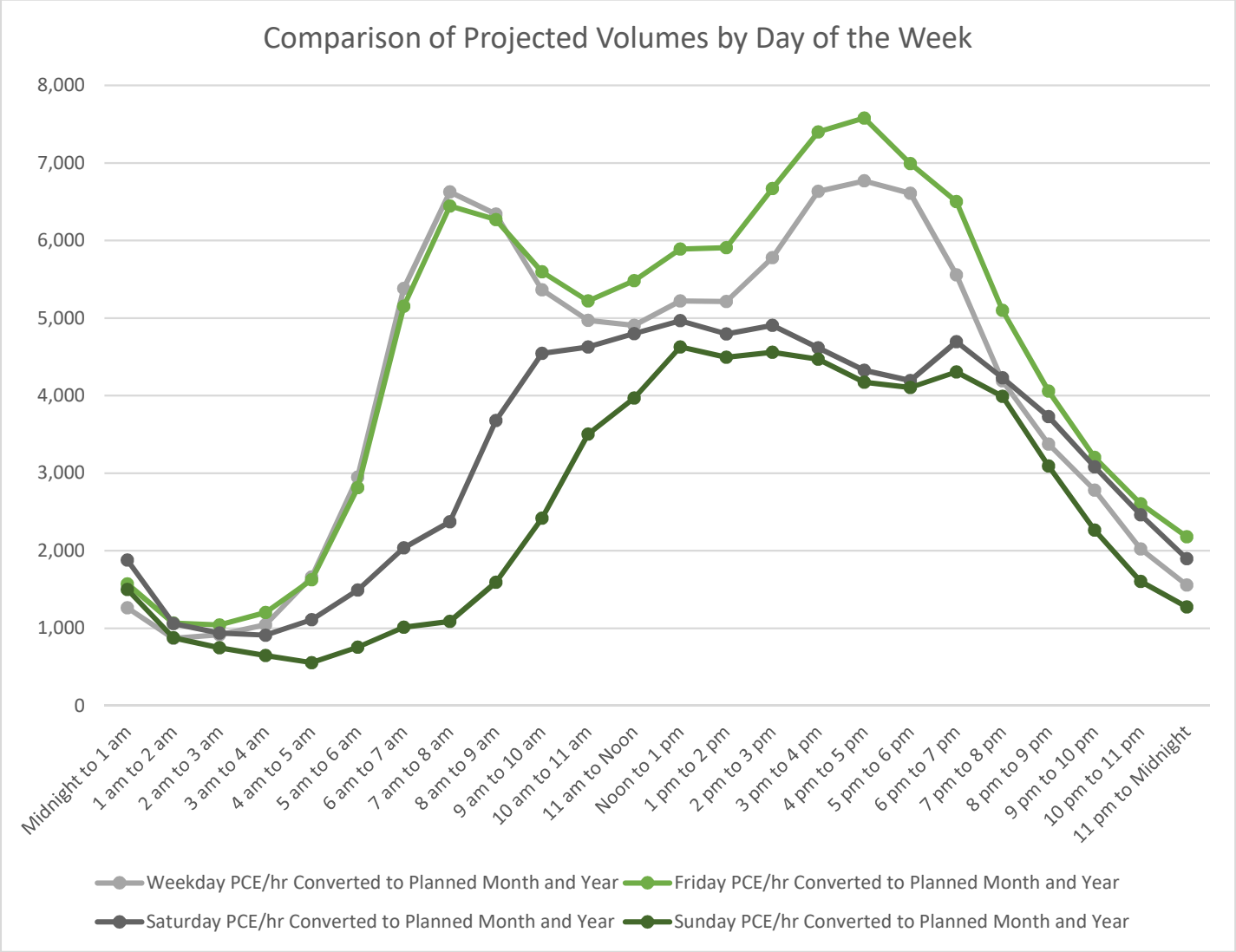

Traffic Volumes

Westbound Volumes

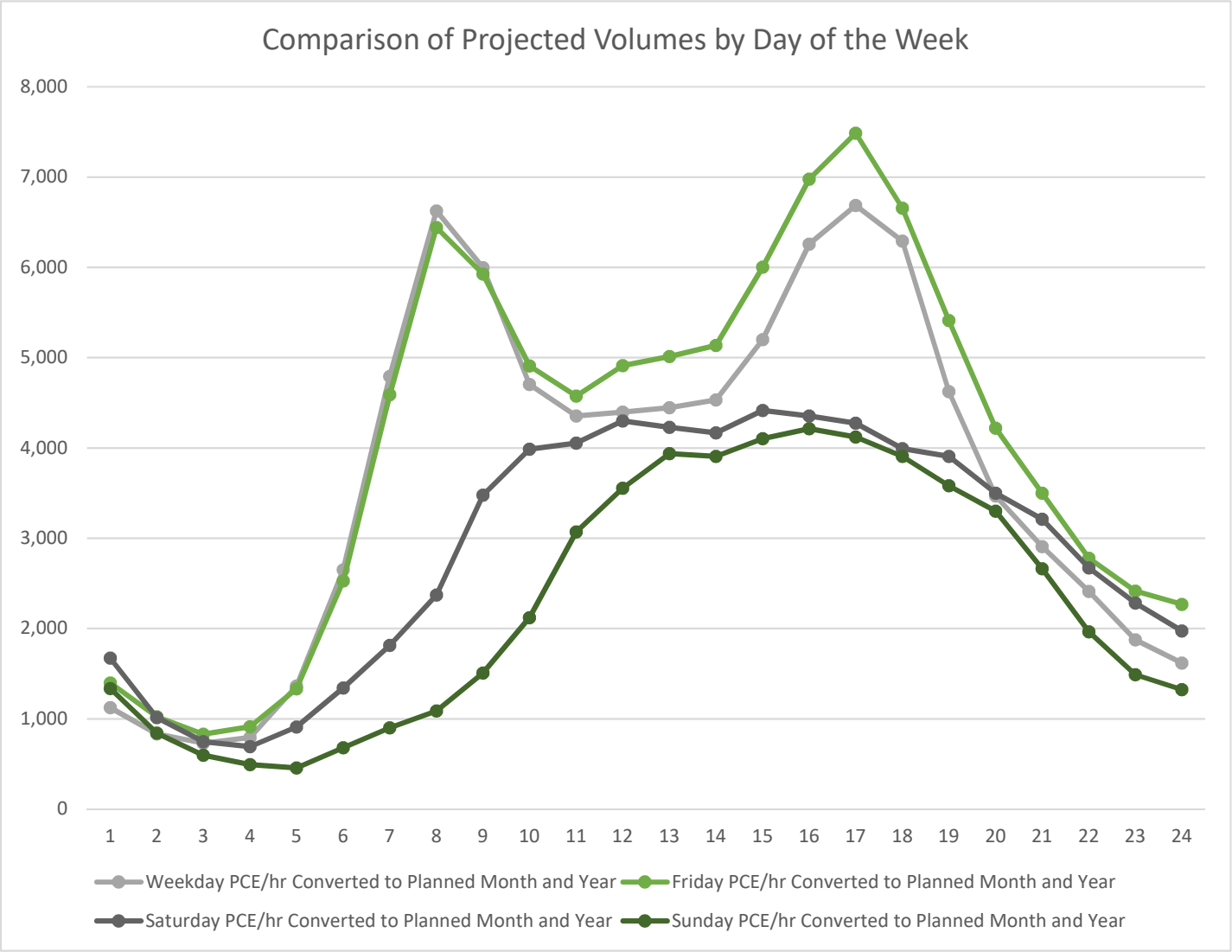

Summary of Alternatives

Eastbound

Alternative 1 (Nighttime Lane Reductions (from 3 to 2 to 1)): Within Policy Limits

Westbound

Alternative 1 (Nighttime Lane Reductions (from 3 to 2 to 1)): Within Policy Limits

Policy Limits Criteria:

i) No queues of any length for > 6 continuous hours or 12 hours in a calendar day
ii) No queues >0.5 mi for > 4 continuous hours
iii) No queues >1.0 mi for > 2 continuous hours
iv) No queues >1.5 mi

INDIANA DEPARTMENT OF TRANSPORTATION

Alternative 1

Nighttime Lane Reductions (from 3 to 2 to 1)

Capacities for Eastbound Traffic (PCE/hr)

Time	Monday	Tuesday	Wednesday	Thursday	Friday	Saturday	Sunday
Midnight to 1 am	1623	1623	1623	1623	1623	1623	1623
1 am to 2 am	1623	1623	1623	1623	1623	1623	1623
2 am to 3 am	1623	1623	1623	1623	1623	1623	1623
3 am to 4 am	1623	1623	1623	1623	1623	1623	1623
4 am to 5 am	1623	1623	1623	1623	1623	1623	1623
5 am to 6 am	7425	7425	7425	7425	7425	7425	7425
6 am to 7 am	7425	7425	7425	7425	7425	7425	7425
7 am to 8 am	7425	7425	7425	7425	7425	7425	7425
8 am to 9 am	7425	7425	7425	7425	7425	7425	7425
9 am to 10 am	7425	7425	7425	7425	7425	7425	7425
10 am to 11 am	7425	7425	7425	7425	7425	7425	7425
11 am to Noon	7425	7425	7425	7425	7425	7425	7425
Noon to 1 pm	7425	7425	7425	7425	7425	7425	7425
1 pm to 2 pm	7425	7425	7425	7425	7425	7425	7425
2 pm to 3 pm	7425	7425	7425	7425	7425	7425	7425
3 pm to 4 pm	7425	7425	7425	7425	7425	7425	7425
4 pm to 5 pm	7425	7425	7425	7425	7425	7425	7425
5 pm to 6 pm	7425	7425	7425	7425	7425	7425	7425
6 pm to 7 pm	7425	7425	7425	7425	7425	7425	7425
7 pm to 8 pm	7425	7425	7425	7425	7425	7425	7425
8 pm to 9 pm	3520	3520	3520	3520	7425	7425	3520
9 pm to 10 pm	3520	3520	3520	3520	3520	3520	3520
10 pm to 11 pm	3520	3520	3520	3520	3520	3520	3520
11 pm to Midnight	1623	1623	1623	1623	3520	3520	1623

Legend:

Values that are less than the Recommended Non-work Capacity

Summary:

Recommended Non-work Capacity = 7425

Number of Hours per week of restrictions = 61 hr(s)

Alternative 1

Nighttime Lane Reductions (from 3 to 2 to 1)

Queuing for Eastbound Traffic (mi)

Time	Monday	Tuesday	Wednesday	Thursday	Friday	Saturday	Sunday
Midnight to 1 am	0.0	0.0	0.0	0.0	0.0	0.4	0.0
1 am to 2 am	0.0	0.0	0.0	0.0	0.0	0.0	0.0
2 am to 3 am	0.0	0.0	0.0	0.0	0.0	0.0	0.0
3 am to 4 am	0.0	0.0	0.0	0.0	0.0	0.0	0.0
4 am to 5 am	0.1	0.1	0.1	0.1	0.0	0.0	0.0
5 am to 6 am	0.0	0.0	0.0	0.0	0.0	0.0	0.0
6 am to 7 am	0.0	0.0	0.0	0.0	0.0	0.0	0.0
7 am to 8 am	0.0	0.0	0.0	0.0	0.0	0.0	0.0
8 am to 9 am	0.0	0.0	0.0	0.0	0.0	0.0	0.0
9 am to 10 am	0.0	0.0	0.0	0.0	0.0	0.0	0.0
10 am to 11 am	0.0	0.0	0.0	0.0	0.0	0.0	0.0
11 am to Noon	0.0	0.0	0.0	0.0	0.0	0.0	0.0
Noon to 1 pm	0.0	0.0	0.0	0.0	0.0	0.0	0.0
1 pm to 2 pm	0.0	0.0	0.0	0.0	0.0	0.0	0.0
2 pm to 3 pm	0.0	0.0	0.0	0.0	0.0	0.0	0.0
3 pm to 4 pm	0.0	0.0	0.0	0.0	0.0	0.0	0.0
4 pm to 5 pm	0.0	0.0	0.0	0.0	0.3	0.0	0.0
5 pm to 6 pm	0.0	0.0	0.0	0.0	0.0	0.0	0.0
6 pm to 7 pm	0.0	0.0	0.0	0.0	0.0	0.0	0.0
7 pm to 8 pm	0.0	0.0	0.0	0.0	0.0	0.0	0.0
8 pm to 9 pm	0.0	0.0	0.0	0.0	0.0	0.0	0.0
9 pm to 10 pm	0.0	0.0	0.0	0.0	0.0	0.0	0.0
10 pm to 11 pm	0.0	0.0	0.0	0.0	0.0	0.0	0.0
11 pm to Midnight	0.0	0.0	0.0	0.0	0.0	0.0	0.0

Legend:

Queues greater than zero, but less than 1.5 miles

Queues greater than or equal to 1.5 miles

Summary:

Maximum Queue Length =	0.4 mi
Total queue length-hours =	1 mi-hrs
Total hours with queue =	7 hrs

INDIANA DEPARTMENT OF TRANSPORTATION

Alternative 1

Nighttime Lane Reductions (from 3 to 2 to 1)

Capacities for Westbound Traffic (PCE/hr)

Time	Monday	Tuesday	Wednesday	Thursday	Friday	Saturday	Sunday
Midnight to 1 am	1623	1623	1623	1623	1623	1623	1623
1 am to 2 am	1623	1623	1623	1623	1623	1623	1623
2 am to 3 am	1623	1623	1623	1623	1623	1623	1623
3 am to 4 am	1623	1623	1623	1623	1623	1623	1623
4 am to 5 am	1623	1623	1623	1623	1623	1623	1623
5 am to 6 am	7425	7425	7425	7425	7425	7425	7425
6 am to 7 am	7425	7425	7425	7425	7425	7425	7425
7 am to 8 am	7425	7425	7425	7425	7425	7425	7425
8 am to 9 am	7425	7425	7425	7425	7425	7425	7425
9 am to 10 am	7425	7425	7425	7425	7425	7425	7425
10 am to 11 am	7425	7425	7425	7425	7425	7425	7425
11 am to Noon	7425	7425	7425	7425	7425	7425	7425
Noon to 1 pm	7425	7425	7425	7425	7425	7425	7425
1 pm to 2 pm	7425	7425	7425	7425	7425	7425	7425
2 pm to 3 pm	7425	7425	7425	7425	7425	7425	7425
3 pm to 4 pm	7425	7425	7425	7425	7425	7425	7425
4 pm to 5 pm	7425	7425	7425	7425	7425	7425	7425
5 pm to 6 pm	7425	7425	7425	7425	7425	7425	7425
6 pm to 7 pm	7425	7425	7425	7425	7425	7425	7425
7 pm to 8 pm	7425	7425	7425	7425	7425	7425	7425
8 pm to 9 pm	3520	3520	3520	3520	7425	7425	3520
9 pm to 10 pm	3520	3520	3520	3520	3520	3520	3520
10 pm to 11 pm	3520	3520	3520	3520	3520	3520	3520
11 pm to Midnight	1623	1623	1623	1623	3520	3520	1623

Legend:

Values that are less than the Recommended Non-work Capacity

Summary:

Recommended Non-work Capacity = 7425

Number of Hours per week of restrictions = 61 hr(s)

Alternative 1

Nighttime Lane Reductions (from 3 to 2 to 1)

Queuing for Westbound Traffic (mi)

Time	Monday	Tuesday	Wednesday	Thursday	Friday	Saturday	Sunday
Midnight to 1 am	0.0	0.0	0.0	0.0	0.0	0.1	0.0
1 am to 2 am	0.0	0.0	0.0	0.0	0.0	0.0	0.0
2 am to 3 am	0.0	0.0	0.0	0.0	0.0	0.0	0.0
3 am to 4 am	0.0	0.0	0.0	0.0	0.0	0.0	0.0
4 am to 5 am	0.0	0.0	0.0	0.0	0.0	0.0	0.0
5 am to 6 am	0.0	0.0	0.0	0.0	0.0	0.0	0.0
6 am to 7 am	0.0	0.0	0.0	0.0	0.0	0.0	0.0
7 am to 8 am	0.0	0.0	0.0	0.0	0.0	0.0	0.0
8 am to 9 am	0.0	0.0	0.0	0.0	0.0	0.0	0.0
9 am to 10 am	0.0	0.0	0.0	0.0	0.0	0.0	0.0
10 am to 11 am	0.0	0.0	0.0	0.0	0.0	0.0	0.0
11 am to Noon	0.0	0.0	0.0	0.0	0.0	0.0	0.0
Noon to 1 pm	0.0	0.0	0.0	0.0	0.0	0.0	0.0
1 pm to 2 pm	0.0	0.0	0.0	0.0	0.0	0.0	0.0
2 pm to 3 pm	0.0	0.0	0.0	0.0	0.0	0.0	0.0
3 pm to 4 pm	0.0	0.0	0.0	0.0	0.0	0.0	0.0
4 pm to 5 pm	0.0	0.0	0.0	0.0	0.1	0.0	0.0
5 pm to 6 pm	0.0	0.0	0.0	0.0	0.0	0.0	0.0
6 pm to 7 pm	0.0	0.0	0.0	0.0	0.0	0.0	0.0
7 pm to 8 pm	0.0	0.0	0.0	0.0	0.0	0.0	0.0
8 pm to 9 pm	0.0	0.0	0.0	0.0	0.0	0.0	0.0
9 pm to 10 pm	0.0	0.0	0.0	0.0	0.0	0.0	0.0
10 pm to 11 pm	0.0	0.0	0.0	0.0	0.0	0.0	0.0
11 pm to Midnight	0.0	0.0	0.0	0.0	0.0	0.0	0.0

Legend:

Queues greater than zero, but less than 1.5 miles

Queues greater than or equal to 1.5 miles

Summary:

Maximum Queue Length =	0.1 mi
Total queue length-hours =	0 mi-hrs
Total hours with queue =	2 hrs

INDIANA DEPARTMENT OF TRANSPORTATION

Report for IHCP Queuing Analysis

Prepared by:	**Thomas Heustis**	Position:	**Principal Engineer**
Prepared for:	**Taylor Hartman**	Position:	**Greenfield Traffic Engineer**

Work Zone Information

Route:	I-465 (2023 thru 2024)
Mile marker:	MM 0.1 to 9.8
Positive Direction:	West
Contract:	R-41536
Work Year:	2024
Work Month:	JUN
Work Type:	Design
Work Description:	Overnight Work
Permanent Speed Limit:	55 mph
Work Zone Speed Limit:	45 mph
Workzone Lane Width:	11 ft
Channelizing Devices:	Mixture of Construction Drums, Cones and Barrier Wall.
Additional Information:	On I-465 from I-65 to I-70 in 2023 and 2024.

Queuing Formula

$$L = L_0 + \frac{(V - C) * 1\,hr}{(k * N)}$$

Where:

- L= Length of Queue for Specified Hour (mi)
- L_0= Length of Queue in the Hour Prior to Specified Hour (mi)
- V= Hourly Volume (PCE/hr)
- C= Hourly Capacity (PCE/hr)
- k= Jam Density (PCE/mi/lane)
- N= Number of Storage Lanes Upstream of Restriction (lanes)

Jam Density (k)=	190 PCE/mi/ln
N for EB=	3 ln
N for WB=	3 ln

Traffic Information

Count Information	Count Station Number:	978310
	Month, Year of Count:	AUG, 2018
	Rural/Urban:	Urban

Weekend Adjustment Factors

Values from "Hourly Day of the Week Conversion Factors.xlsx" downloaded on 12/4/2019

Factors to Adjust Counts to Annual Value in Current Year

Annual Adj. Factor:	1.0201
Monthly Adj. Factor:	0.953

Factors to Project Annual Value in Current Year to Work Month and Year

Annual Adj. Factor:	1.041
Monthly Adj. Factor:	0.94

Assumed Percent Reduction of Traffic Due to Detouring

Eastbound

Monday-Thursday:	0%
Friday:	0%
Saturday-Sunday:	0%

Westbound

Monday-Thursday:	0%
Friday:	0%
Saturday-Sunday:	0%

Traffic Volumes

Time	Eastbound Volumes (PCE/hr)				Westbound Volumes (PCE/hr)			
	Weekday	Friday	Saturday	Sunday	Weekday	Friday	Saturday	Sunday
Midnight to 1 am	1049	1304	1559	1245	933	1159	1386	1107
1 am to 2 am	721	885	877	728	690	847	839	697
2 am to 3 am	761	865	779	622	606	689	620	495
3 am to 4 am	868	998	757	539	658	757	573	408
4 am to 5 am	1376	1347	919	461	1129	1105	754	378
5 am to 6 am	2445	2331	1237	627	2200	2097	1113	564
6 am to 7 am	4464	4273	1690	840	3974	3805	1505	748
7 am to 8 am	5497	5345	1968	902	5495	5343	1967	901
8 am to 9 am	5258	5197	3050	1321	4974	4916	2885	1250
9 am to 10 am	4448	4641	3769	2006	3902	4071	3307	1759
10 am to 11 am	4121	4330	3837	2905	3611	3794	3362	2545
11 am to Noon	4071	4547	3979	3290	3649	4076	3566	2950
Noon to 1 pm	4331	4885	4118	3837	3685	4157	3504	3265
1 pm to 2 pm	4322	4897	3976	3726	3758	4258	3457	3240
2 pm to 3 pm	4790	5530	4068	3781	4312	4978	3662	3404
3 pm to 4 pm	5503	6136	3829	3706	5188	5785	3609	3493
4 pm to 5 pm	5614	6286	3589	3461	5544	6208	3544	3418
5 pm to 6 pm	5482	5799	3477	3403	5219	5520	3310	3240
6 pm to 7 pm	4610	5392	3895	3569	3836	4487	3241	2970
7 pm to 8 pm	3475	4227	3506	3308	2875	3497	2901	2737
8 pm to 9 pm	2800	3367	3092	2563	2412	2901	2664	2208
9 pm to 10 pm	2306	2658	2556	1878	2002	2307	2219	1630
10 pm to 11 pm	1677	2161	2043	1331	1554	2003	1893	1234
11 pm to Midnight	1292	1808	1573	1056	1343	1879	1635	1097

Note: All Traffic Volumes are in PCEs/hr as defined in the IHCP.

Traffic Volumes

Eastbound Volumes

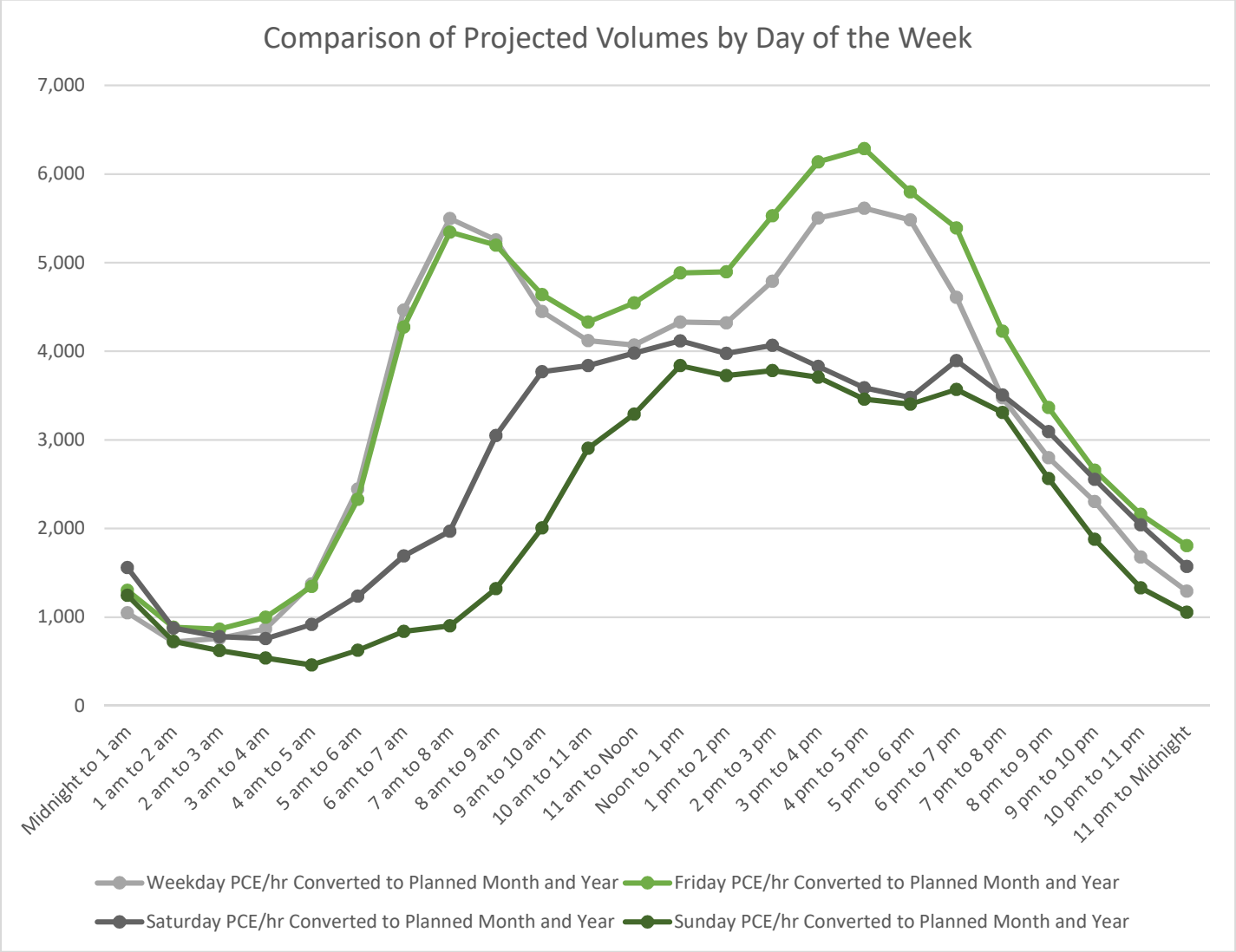

Traffic Volumes

Westbound Volumes

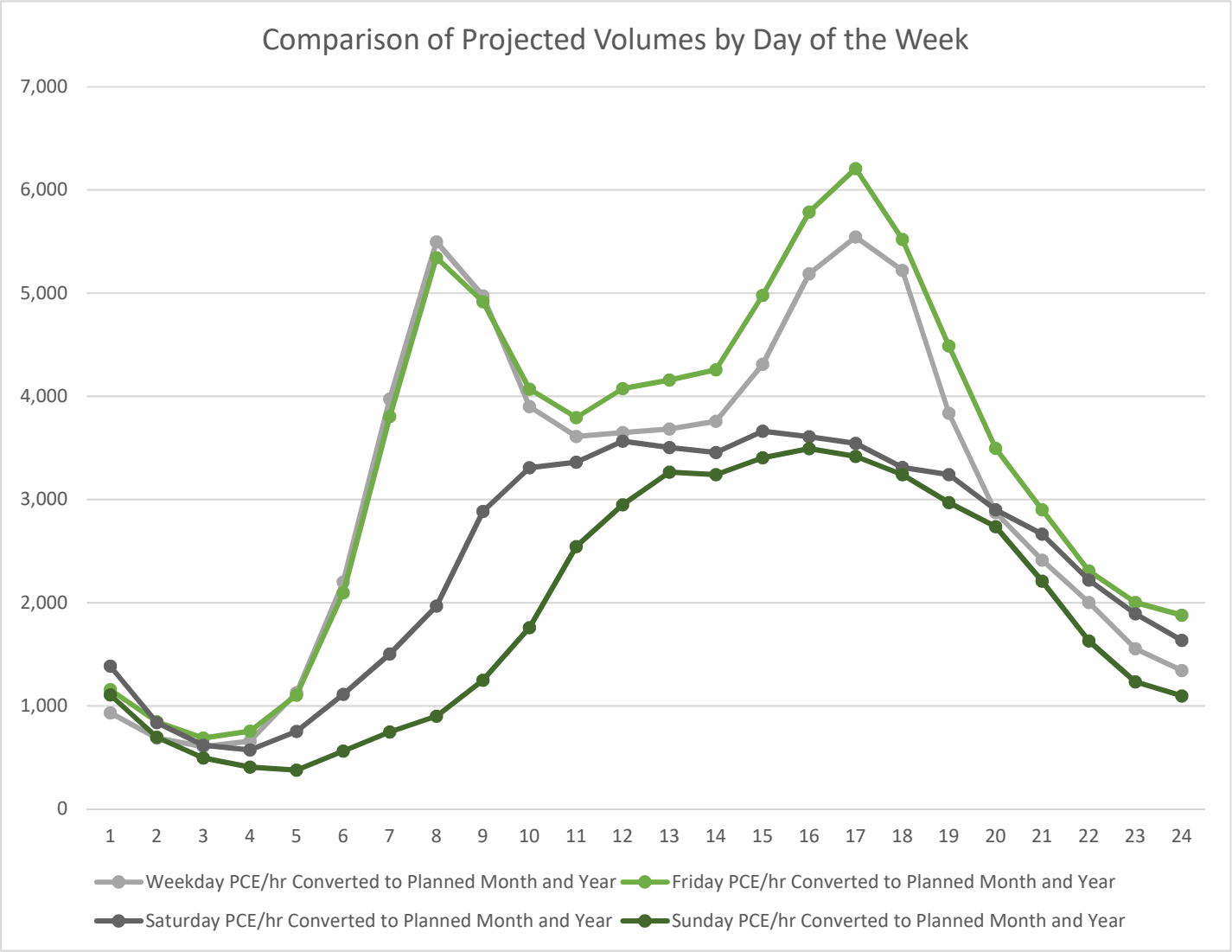

Summary of Alternatives

Eastbound

Alternative 1 (Nighttime Lane Reductions (from 3 to 2 to 1) in 2023-2024): Within Policy Limits

Westbound

Alternative 1 (Nighttime Lane Reductions (from 3 to 2 to 1) in 2023-2024): Within Policy Limits

Policy Limits Criteria:

i) No queues of any length for > 6 continuous hours or 12 hours in a calendar day
ii) No queues >0.5 mi for > 4 continuous hours
iii) No queues >1.0 mi for > 2 continuous hours
iv) No queues >1.5 mi

INDIANA DEPARTMENT OF TRANSPORTATION

Alternative 1

Nighttime Lane Reductions (from 3 to 2 to 1) in 2023-2024

Capacities for Eastbound Traffic (PCE/hr)

Time	Monday	Tuesday	Wednesday	Thursday	Friday	Saturday	Sunday
Midnight to 1 am	1623	1623	1623	1623	1623	1623	1623
1 am to 2 am	1623	1623	1623	1623	1623	1623	1623
2 am to 3 am	1623	1623	1623	1623	1623	1623	1623
3 am to 4 am	1623	1623	1623	1623	1623	1623	1623
4 am to 5 am	1623	1623	1623	1623	1623	1623	1623
5 am to 6 am	7425	7425	7425	7425	7425	7425	7425
6 am to 7 am	7425	7425	7425	7425	7425	7425	7425
7 am to 8 am	7425	7425	7425	7425	7425	7425	7425
8 am to 9 am	7425	7425	7425	7425	7425	7425	7425
9 am to 10 am	7425	7425	7425	7425	7425	7425	7425
10 am to 11 am	7425	7425	7425	7425	7425	7425	7425
11 am to Noon	7425	7425	7425	7425	7425	7425	7425
Noon to 1 pm	7425	7425	7425	7425	7425	7425	7425
1 pm to 2 pm	7425	7425	7425	7425	7425	7425	7425
2 pm to 3 pm	7425	7425	7425	7425	7425	7425	7425
3 pm to 4 pm	7425	7425	7425	7425	7425	7425	7425
4 pm to 5 pm	7425	7425	7425	7425	7425	7425	7425
5 pm to 6 pm	7425	7425	7425	7425	7425	7425	7425
6 pm to 7 pm	7425	7425	7425	7425	7425	7425	7425
7 pm to 8 pm	7425	7425	7425	7425	7425	7425	7425
8 pm to 9 pm	3520	3520	3520	3520	7425	7425	3520
9 pm to 10 pm	3520	3520	3520	3520	3520	3520	3520
10 pm to 11 pm	3520	3520	3520	3520	3520	3520	3520
11 pm to Midnight	1623	1623	1623	1623	3520	3520	1623

Legend:

Values that are less than the Recommended Non-work Capacity

Summary:

Recommended Non-work Capacity = 7425

Number of Hours per week of restrictions = 61 hr(s)

Alternative 1

Nighttime Lane Reductions (from 3 to 2 to 1) in 2023-2024

Queuing for Eastbound Traffic (mi)

Time	Monday	Tuesday	Wednesday	Thursday	Friday	Saturday	Sunday
Midnight to 1 am	0.0	0.0	0.0	0.0	0.0	0.0	0.0
1 am to 2 am	0.0	0.0	0.0	0.0	0.0	0.0	0.0
2 am to 3 am	0.0	0.0	0.0	0.0	0.0	0.0	0.0
3 am to 4 am	0.0	0.0	0.0	0.0	0.0	0.0	0.0
4 am to 5 am	0.0	0.0	0.0	0.0	0.0	0.0	0.0
5 am to 6 am	0.0	0.0	0.0	0.0	0.0	0.0	0.0
6 am to 7 am	0.0	0.0	0.0	0.0	0.0	0.0	0.0
7 am to 8 am	0.0	0.0	0.0	0.0	0.0	0.0	0.0
8 am to 9 am	0.0	0.0	0.0	0.0	0.0	0.0	0.0
9 am to 10 am	0.0	0.0	0.0	0.0	0.0	0.0	0.0
10 am to 11 am	0.0	0.0	0.0	0.0	0.0	0.0	0.0
11 am to Noon	0.0	0.0	0.0	0.0	0.0	0.0	0.0
Noon to 1 pm	0.0	0.0	0.0	0.0	0.0	0.0	0.0
1 pm to 2 pm	0.0	0.0	0.0	0.0	0.0	0.0	0.0
2 pm to 3 pm	0.0	0.0	0.0	0.0	0.0	0.0	0.0
3 pm to 4 pm	0.0	0.0	0.0	0.0	0.0	0.0	0.0
4 pm to 5 pm	0.0	0.0	0.0	0.0	0.0	0.0	0.0
5 pm to 6 pm	0.0	0.0	0.0	0.0	0.0	0.0	0.0
6 pm to 7 pm	0.0	0.0	0.0	0.0	0.0	0.0	0.0
7 pm to 8 pm	0.0	0.0	0.0	0.0	0.0	0.0	0.0
8 pm to 9 pm	0.0	0.0	0.0	0.0	0.0	0.0	0.0
9 pm to 10 pm	0.0	0.0	0.0	0.0	0.0	0.0	0.0
10 pm to 11 pm	0.0	0.0	0.0	0.0	0.0	0.0	0.0
11 pm to Midnight	0.0	0.0	0.0	0.0	0.0	0.0	0.0

Legend:

Queues greater than zero, but less than 1.5 miles

Queues greater than or equal to 1.5 miles

Summary:

Maximum Queue Length =	0.0 mi
Total queue length-hours =	0 mi-hrs
Total hours with queue =	0 hrs

INDIANA DEPARTMENT OF TRANSPORTATION

Alternative 1

Nighttime Lane Reductions (from 3 to 2 to 1) in 2023-2024

Capacities for Westbound Traffic (PCE/hr)

Time	Monday	Tuesday	Wednesday	Thursday	Friday	Saturday	Sunday
Midnight to 1 am	1623	1623	1623	1623	1623	1623	1623
1 am to 2 am	1623	1623	1623	1623	1623	1623	1623
2 am to 3 am	1623	1623	1623	1623	1623	1623	1623
3 am to 4 am	1623	1623	1623	1623	1623	1623	1623
4 am to 5 am	1623	1623	1623	1623	1623	1623	1623
5 am to 6 am	7425	7425	7425	7425	7425	7425	7425
6 am to 7 am	7425	7425	7425	7425	7425	7425	7425
7 am to 8 am	7425	7425	7425	7425	7425	7425	7425
8 am to 9 am	7425	7425	7425	7425	7425	7425	7425
9 am to 10 am	7425	7425	7425	7425	7425	7425	7425
10 am to 11 am	7425	7425	7425	7425	7425	7425	7425
11 am to Noon	7425	7425	7425	7425	7425	7425	7425
Noon to 1 pm	7425	7425	7425	7425	7425	7425	7425
1 pm to 2 pm	7425	7425	7425	7425	7425	7425	7425
2 pm to 3 pm	7425	7425	7425	7425	7425	7425	7425
3 pm to 4 pm	7425	7425	7425	7425	7425	7425	7425
4 pm to 5 pm	7425	7425	7425	7425	7425	7425	7425
5 pm to 6 pm	7425	7425	7425	7425	7425	7425	7425
6 pm to 7 pm	7425	7425	7425	7425	7425	7425	7425
7 pm to 8 pm	7425	7425	7425	7425	7425	7425	7425
8 pm to 9 pm	3520	3520	3520	3520	7425	7425	3520
9 pm to 10 pm	3520	3520	3520	3520	3520	3520	3520
10 pm to 11 pm	3520	3520	3520	3520	3520	3520	3520
11 pm to Midnight	1623	1623	1623	1623	3520	3520	1623

Legend:

Values that are less than the Recommended Non-work Capacity

Summary:

Recommended Non-work Capacity = 7425

Number of Hours per week of restrictions = 61 hr(s)

Alternative 1

Nighttime Lane Reductions (from 3 to 2 to 1) in 2023-2024

Queuing for Westbound Traffic (mi)

Time	Monday	Tuesday	Wednesday	Thursday	Friday	Saturday	Sunday
Midnight to 1 am	0.0	0.0	0.0	0.0	0.0	0.0	0.0
1 am to 2 am	0.0	0.0	0.0	0.0	0.0	0.0	0.0
2 am to 3 am	0.0	0.0	0.0	0.0	0.0	0.0	0.0
3 am to 4 am	0.0	0.0	0.0	0.0	0.0	0.0	0.0
4 am to 5 am	0.0	0.0	0.0	0.0	0.0	0.0	0.0
5 am to 6 am	0.0	0.0	0.0	0.0	0.0	0.0	0.0
6 am to 7 am	0.0	0.0	0.0	0.0	0.0	0.0	0.0
7 am to 8 am	0.0	0.0	0.0	0.0	0.0	0.0	0.0
8 am to 9 am	0.0	0.0	0.0	0.0	0.0	0.0	0.0
9 am to 10 am	0.0	0.0	0.0	0.0	0.0	0.0	0.0
10 am to 11 am	0.0	0.0	0.0	0.0	0.0	0.0	0.0
11 am to Noon	0.0	0.0	0.0	0.0	0.0	0.0	0.0
Noon to 1 pm	0.0	0.0	0.0	0.0	0.0	0.0	0.0
1 pm to 2 pm	0.0	0.0	0.0	0.0	0.0	0.0	0.0
2 pm to 3 pm	0.0	0.0	0.0	0.0	0.0	0.0	0.0
3 pm to 4 pm	0.0	0.0	0.0	0.0	0.0	0.0	0.0
4 pm to 5 pm	0.0	0.0	0.0	0.0	0.0	0.0	0.0
5 pm to 6 pm	0.0	0.0	0.0	0.0	0.0	0.0	0.0
6 pm to 7 pm	0.0	0.0	0.0	0.0	0.0	0.0	0.0
7 pm to 8 pm	0.0	0.0	0.0	0.0	0.0	0.0	0.0
8 pm to 9 pm	0.0	0.0	0.0	0.0	0.0	0.0	0.0
9 pm to 10 pm	0.0	0.0	0.0	0.0	0.0	0.0	0.0
10 pm to 11 pm	0.0	0.0	0.0	0.0	0.0	0.0	0.0
11 pm to Midnight	0.0	0.0	0.0	0.0	0.0	0.0	0.0

Legend:

Queues greater than zero, but less than 1.5 miles

Queues greater than or equal to 1.5 miles

Summary:

Maximum Queue Length =	0.0 mi
Total queue length-hours =	0 mi-hrs
Total hours with queue =	0 hrs

I-69 FINISH LINE

DETOUR ROUTES

I-465 EB Closure

A I-465 EB closed

B Detour: I-70 EB to I-65 SB to I-465

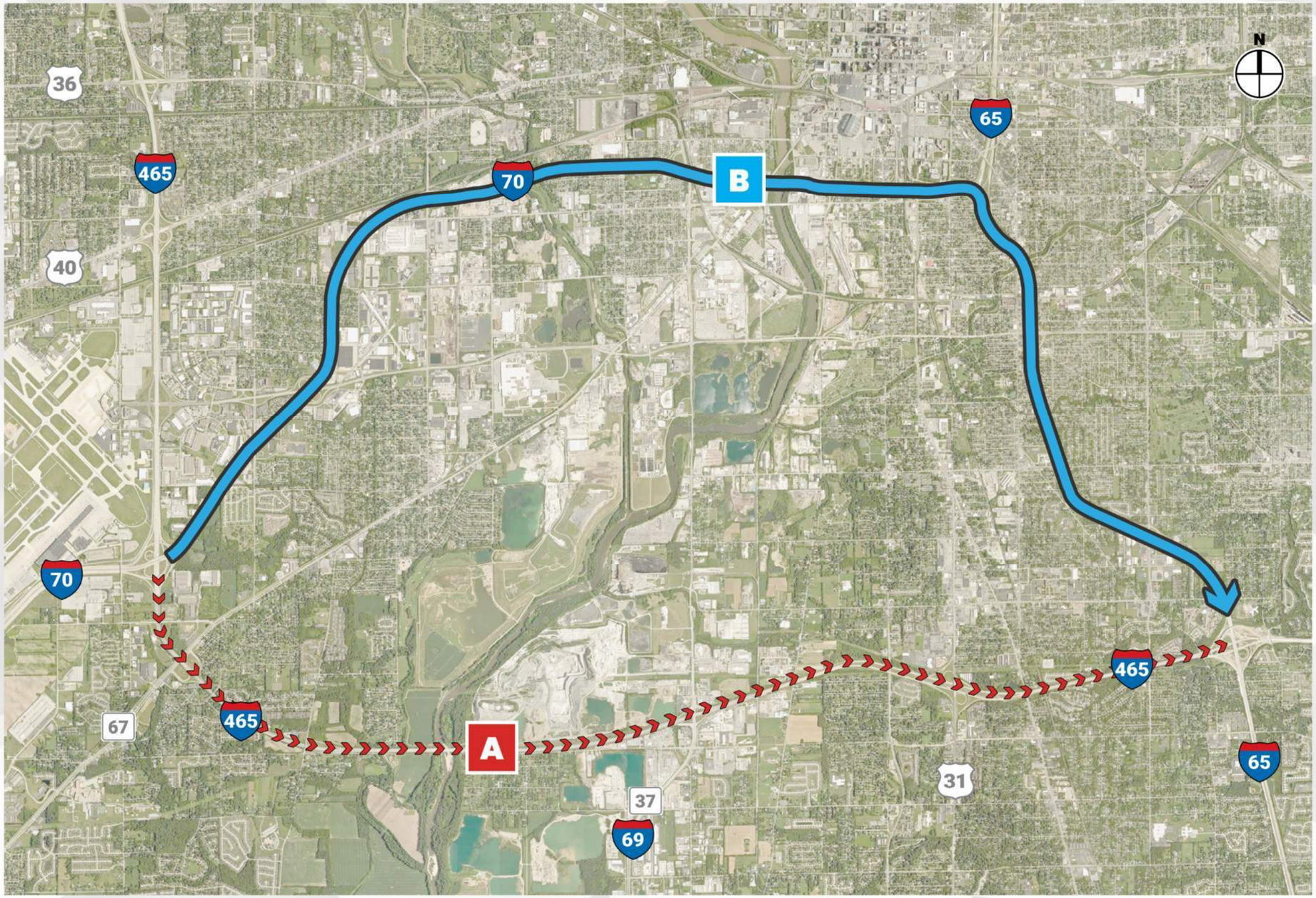

INDIANA DEPARTMENT OF TRANSPORTATION INDOT

NextLevel

I-69 FINISH LINE

DETOUR ROUTES

I-465 WB Closure

A I-465 WB closed

B Detour: I-65 NB to I-70 WB to I-465 WB

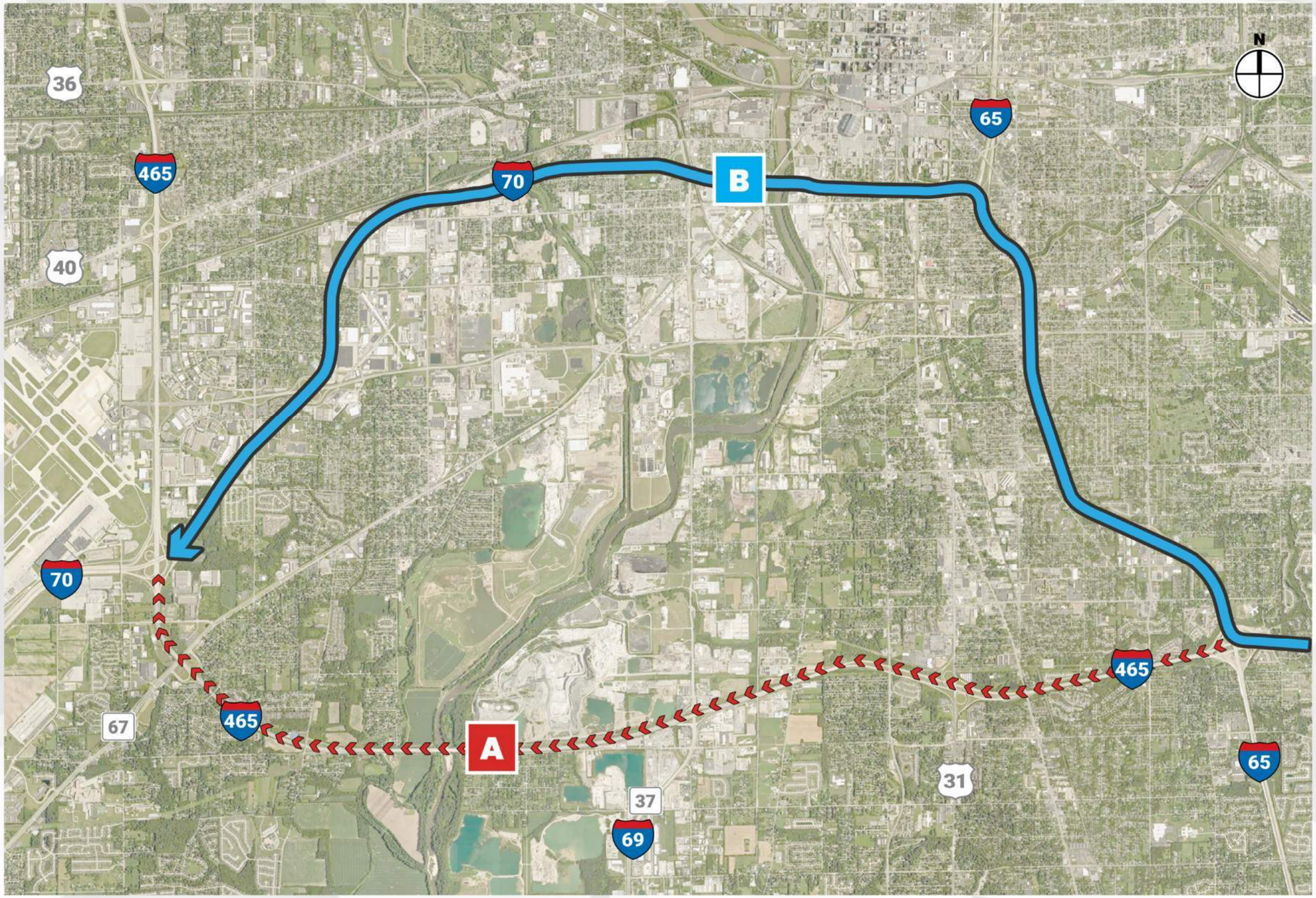

INDIANA DEPARTMENT OF TRANSPORTATION INDOT

NextLevel

I-69 FINISH LINE

RAMP CLOSURES

Mann Rd and I-465

A Mann Road Entrance to I-465 Eastbound

B I-465 Westbound Exit to Mann Road

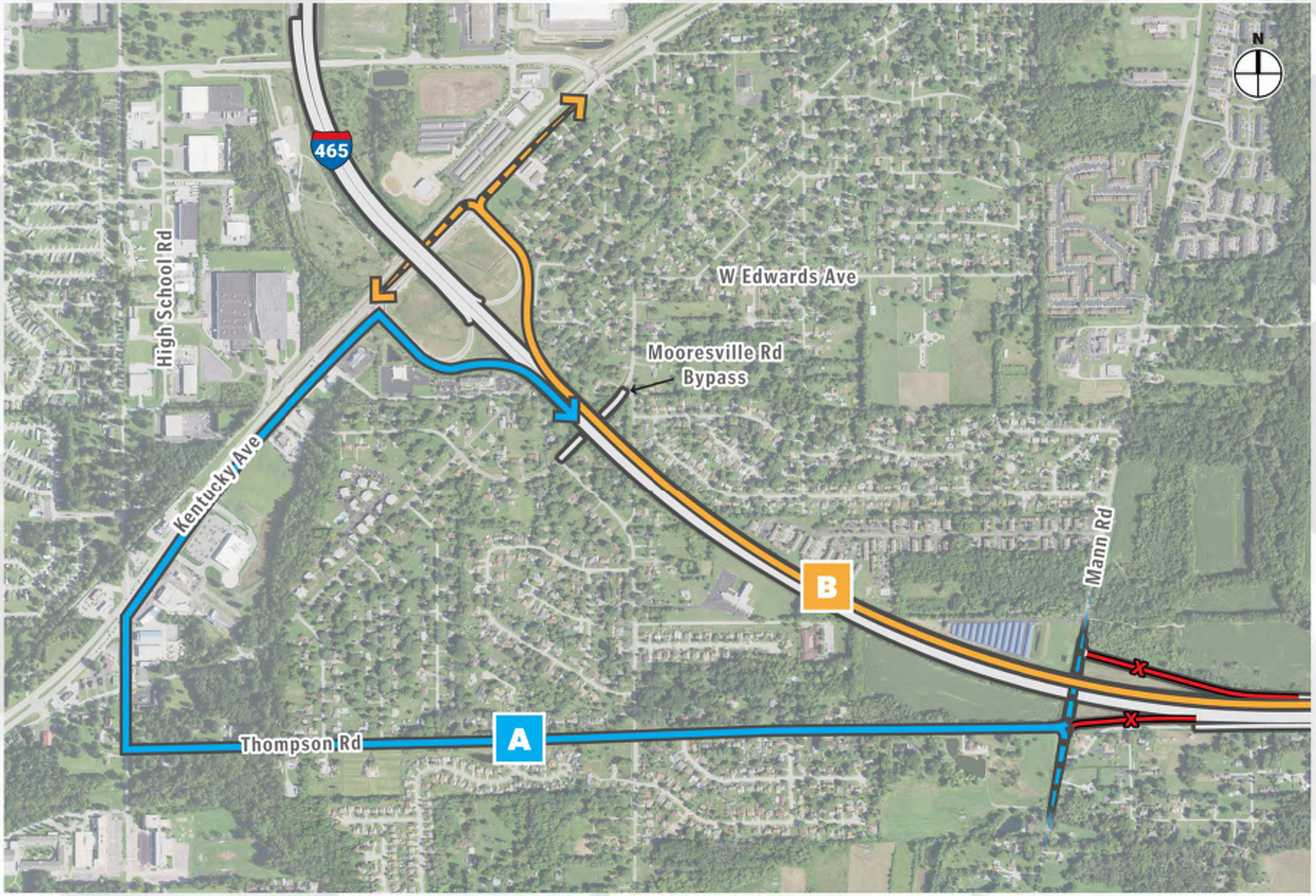

NextLevel

I-69 FINISH LINE

EASTBOUND RAMP CLOSURES

Harding St and I-465

A I-465 Eastbound Exit to Harding Street

B Harding Street Entrance to I-465 Eastbound

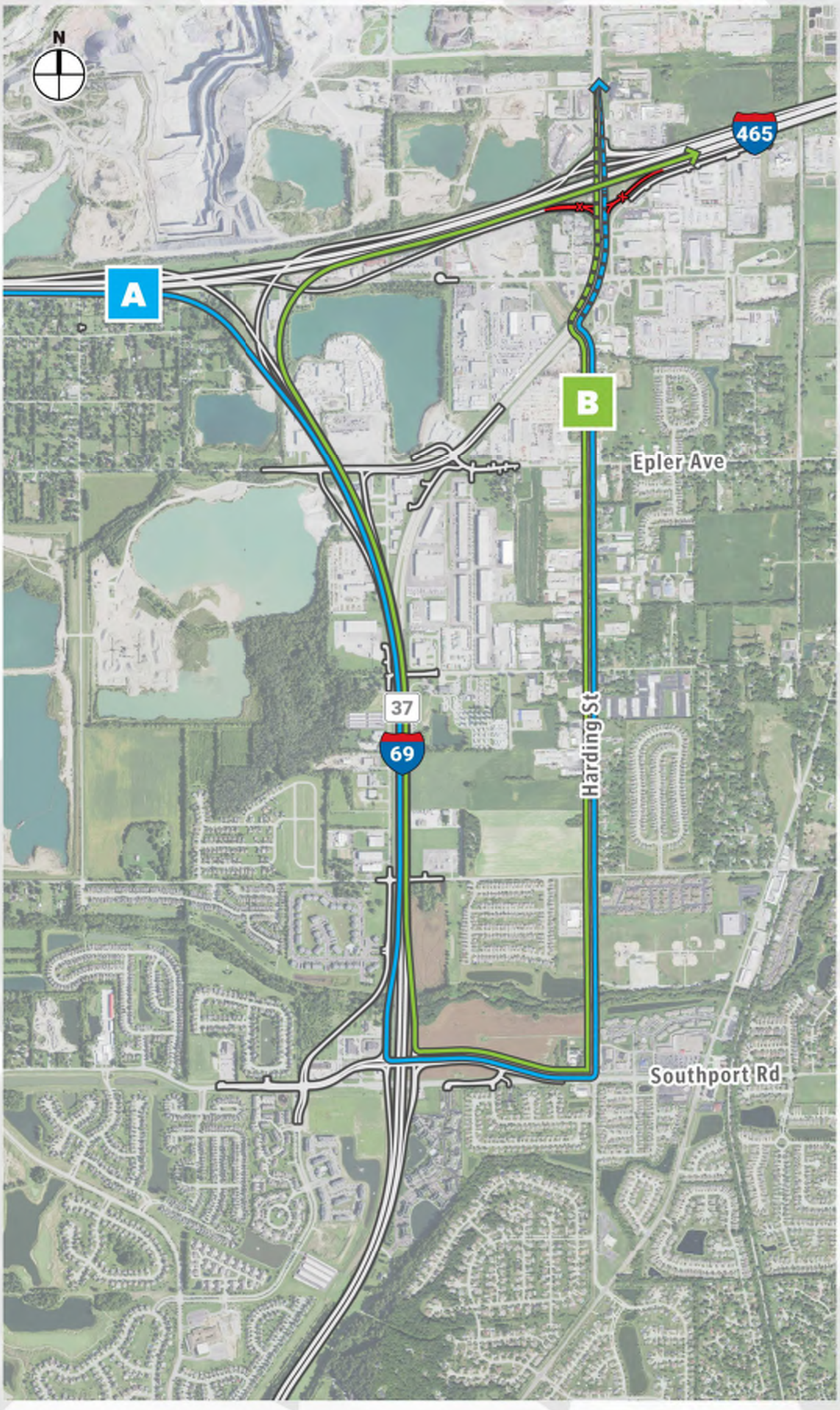

NextLevel

I-69 FINISH LINE

WESTBOUND RAMP CLOSURES

Harding St and I-465

A I-465 Westbound Exit to Harding Street

B Harding Street Entrance to I-465 Westbound

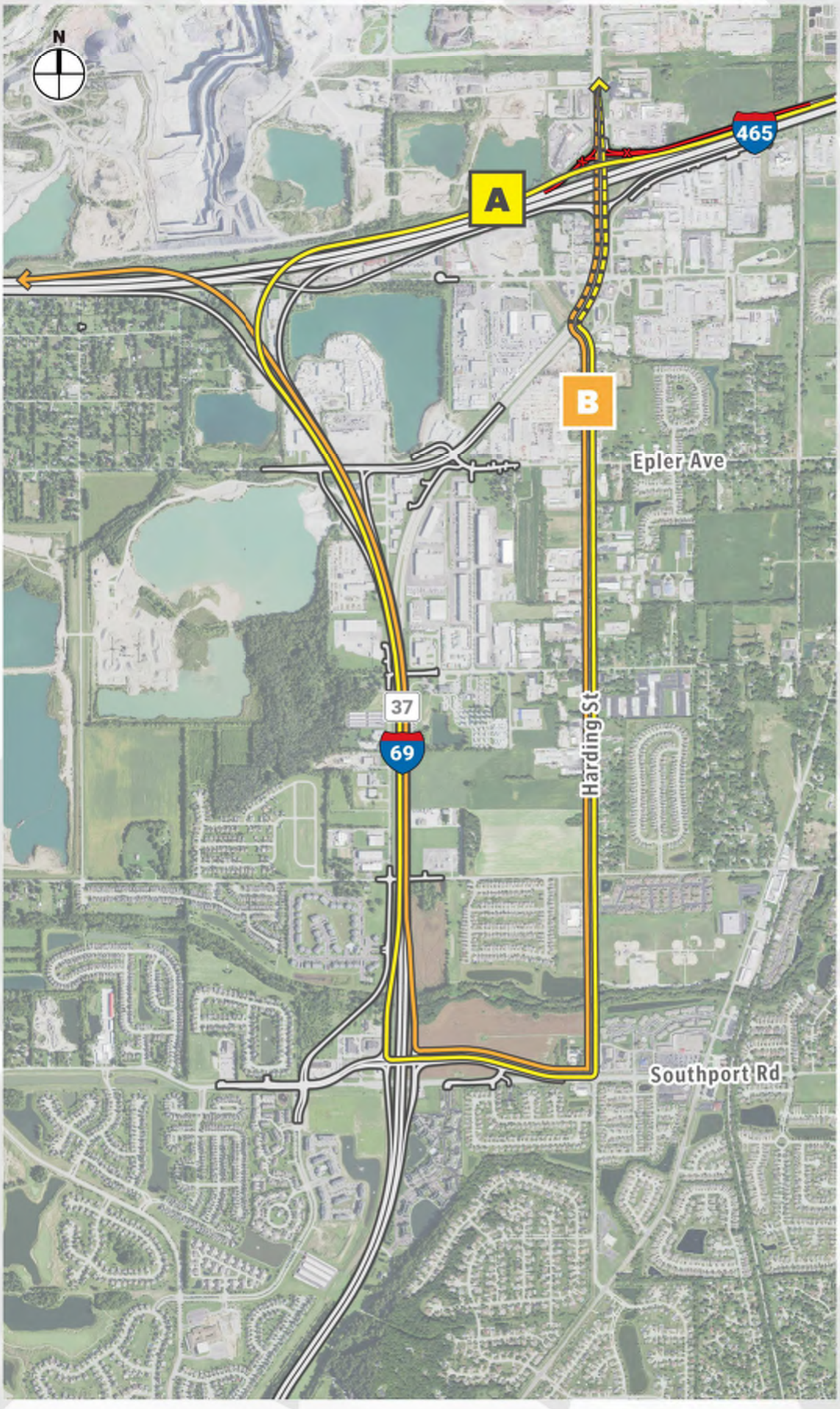

NextLevel

I-69 FINISH LINE

RAMP CLOSURES

East St and I-465

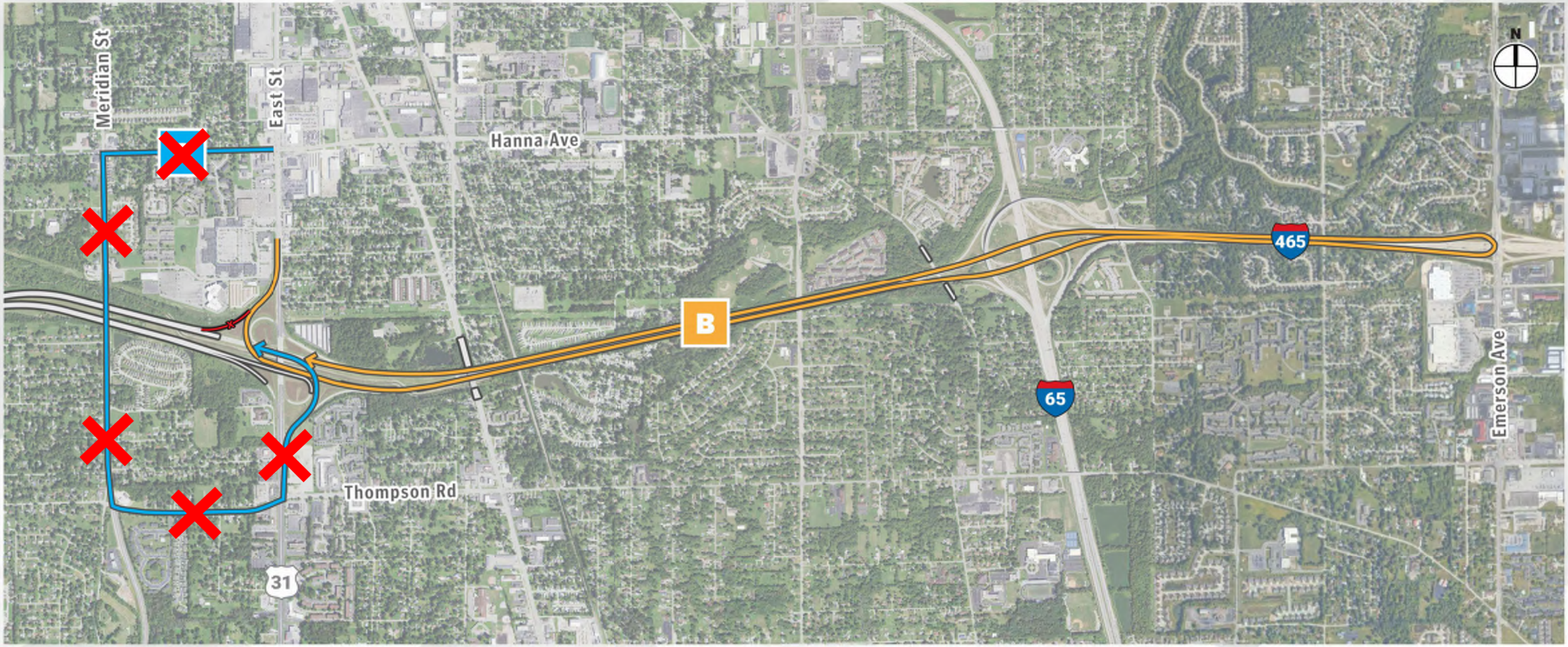

~~A Option A~~

B Option B

NextLevel

I-69 FINISH LINE

LOCAL DETOUR CONCEPT

Mooresville Rd Bypass Closure

NextLevel

I-69 FINISH LINE

LOCAL DETOUR CONCEPT

Mann Rd Closure

Detour route

Road closure

Local traffic only (barriers present)

NextLevel

I-69 FINISH LINE

LOCAL DETOUR CONCEPT

Madison Ave Closure

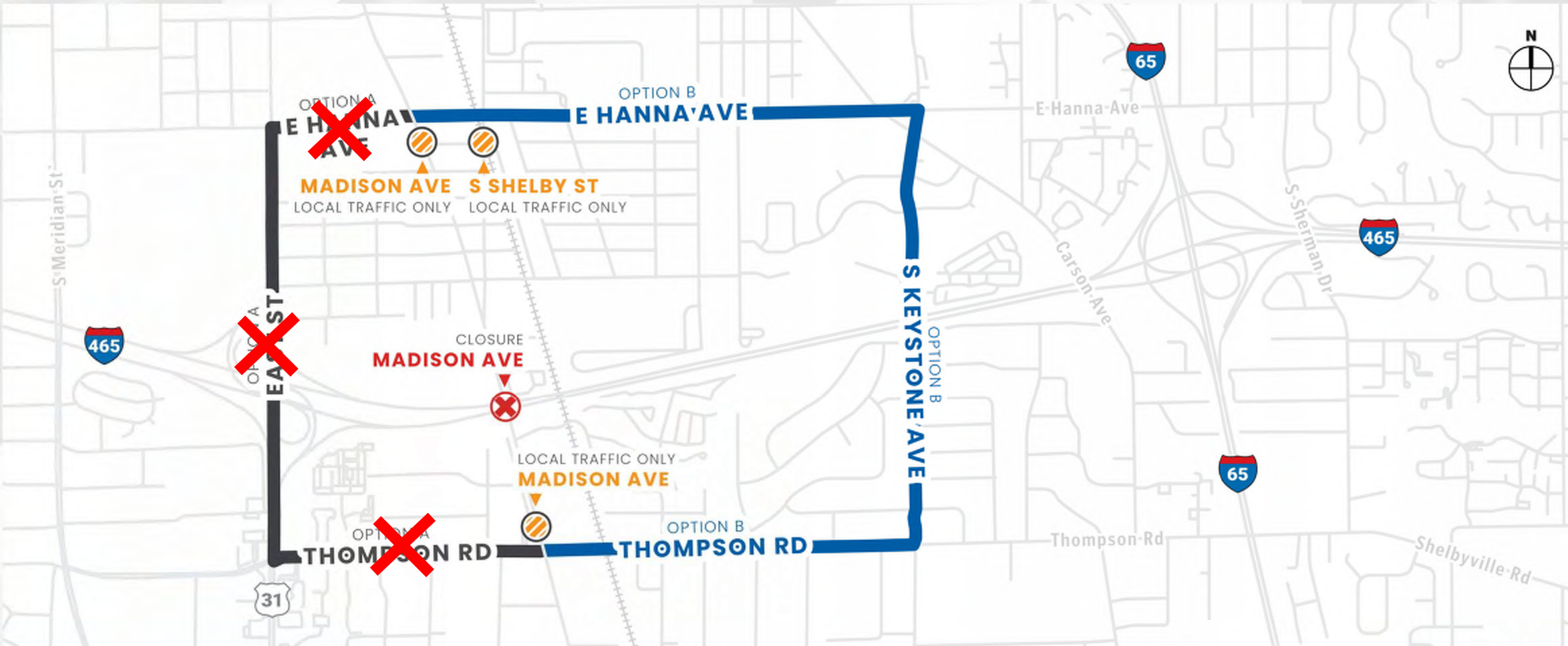

Option A detour

Option B detour

Road closure

Local traffic only (barriers present)

NextLevel

I-69 FINISH LINE

LOCAL DETOUR CONCEPT

Keystone Ave Closure

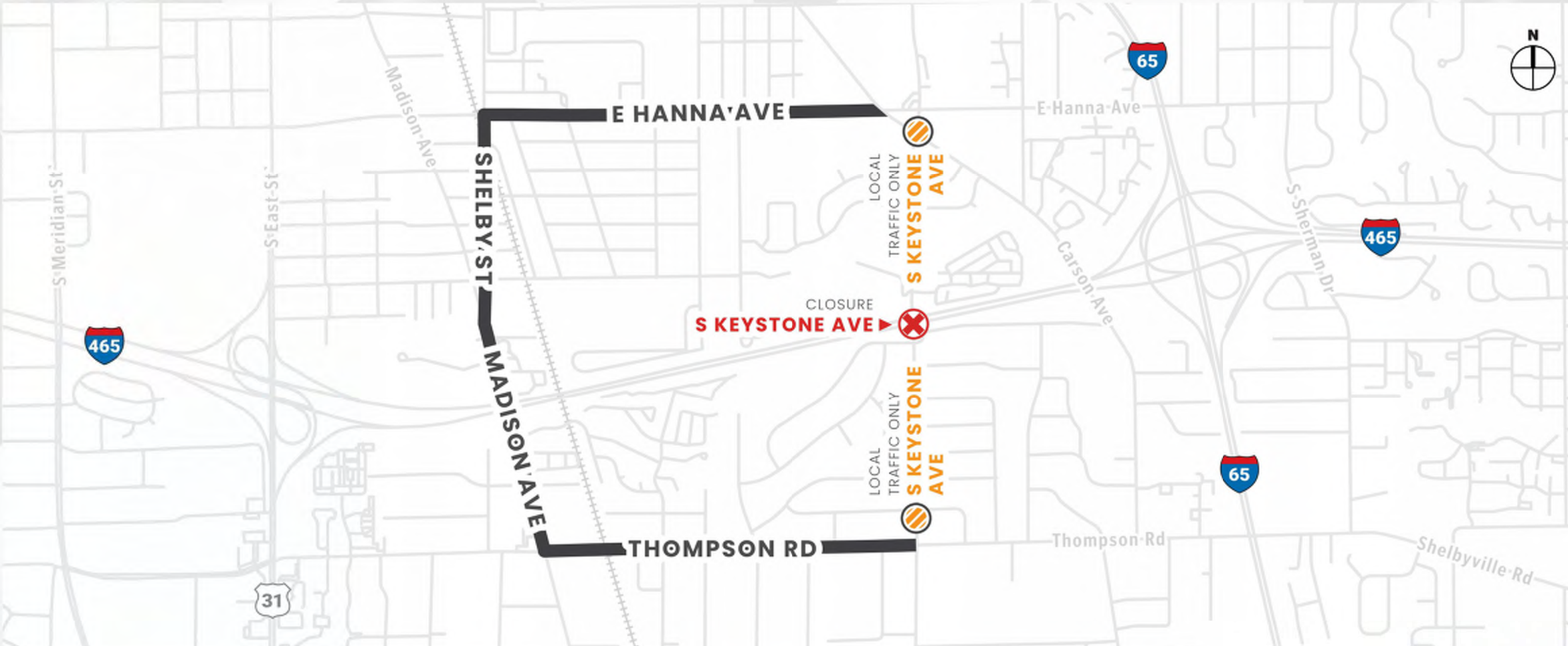

Detour route

Road closure

Local traffic only (barriers present)

NextLevel

I-69 FINISH LINE

LOCAL DETOUR CONCEPT

Carson Ave Closure

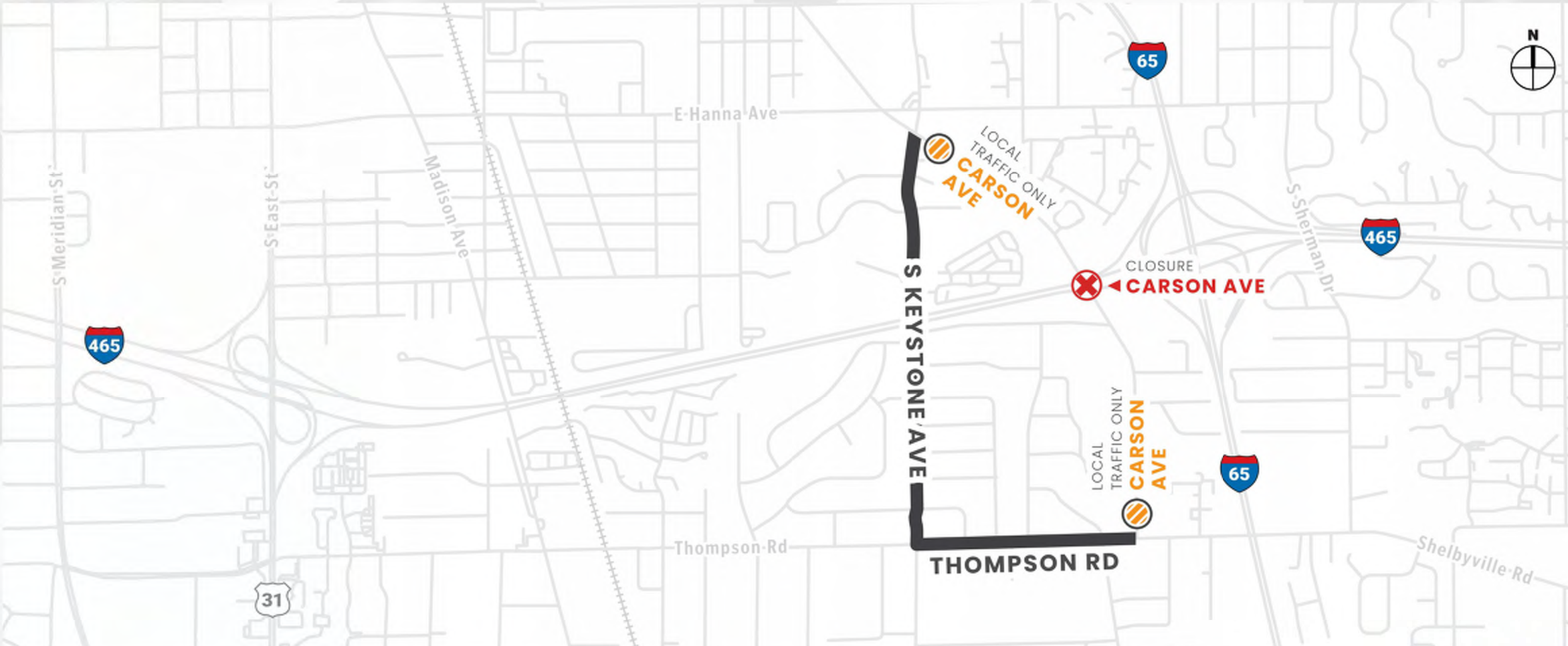

Detour route

Road closure

Local traffic only (barriers present)

NextLevel

I-69 FINISH LINE

LOCAL DETOUR CONCEPT

Epler Ave Closure

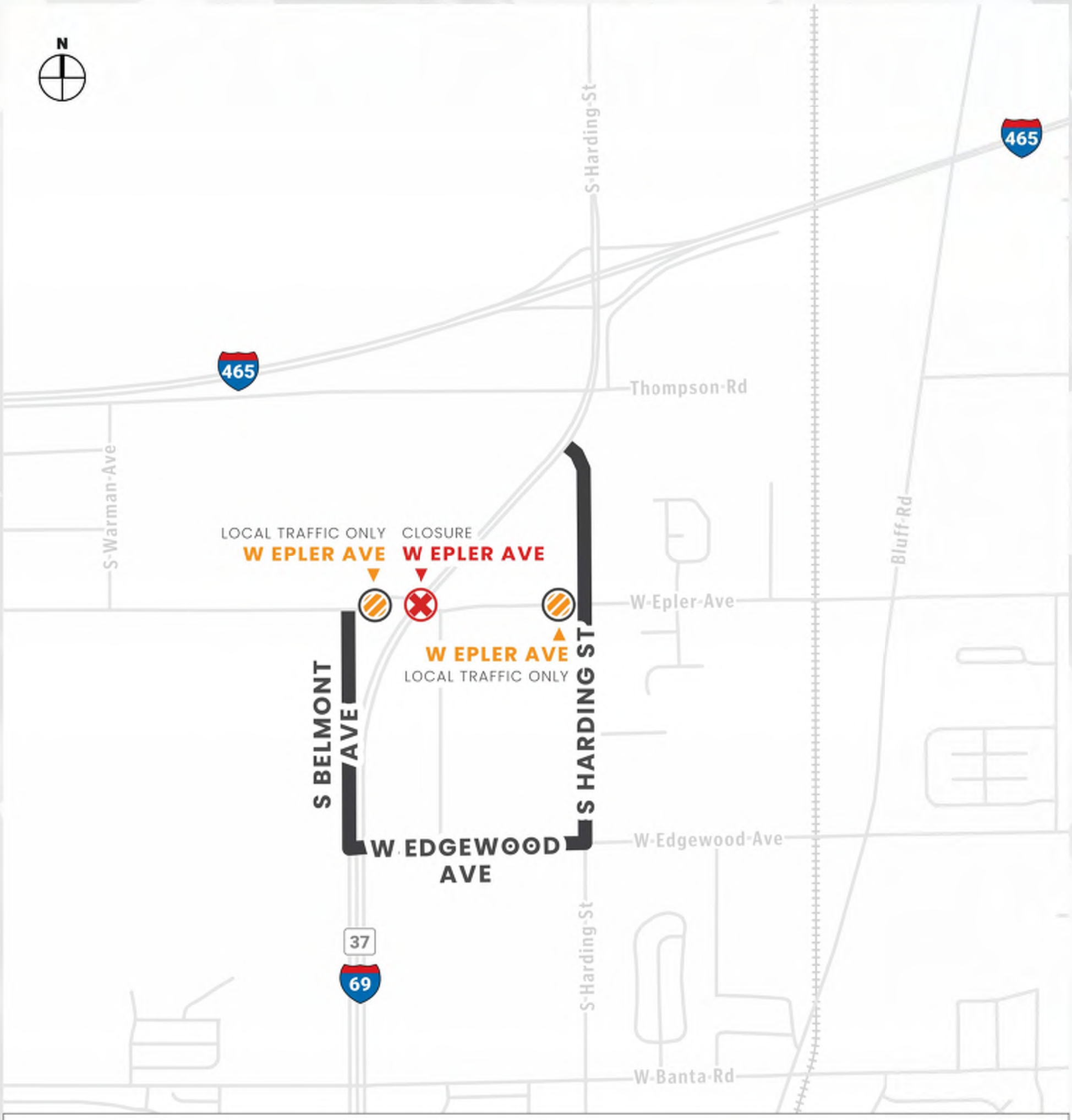

NextLevel

I-69 FINISH LINE

LOCAL DETOUR CONCEPT

Edgewood Ave Closure

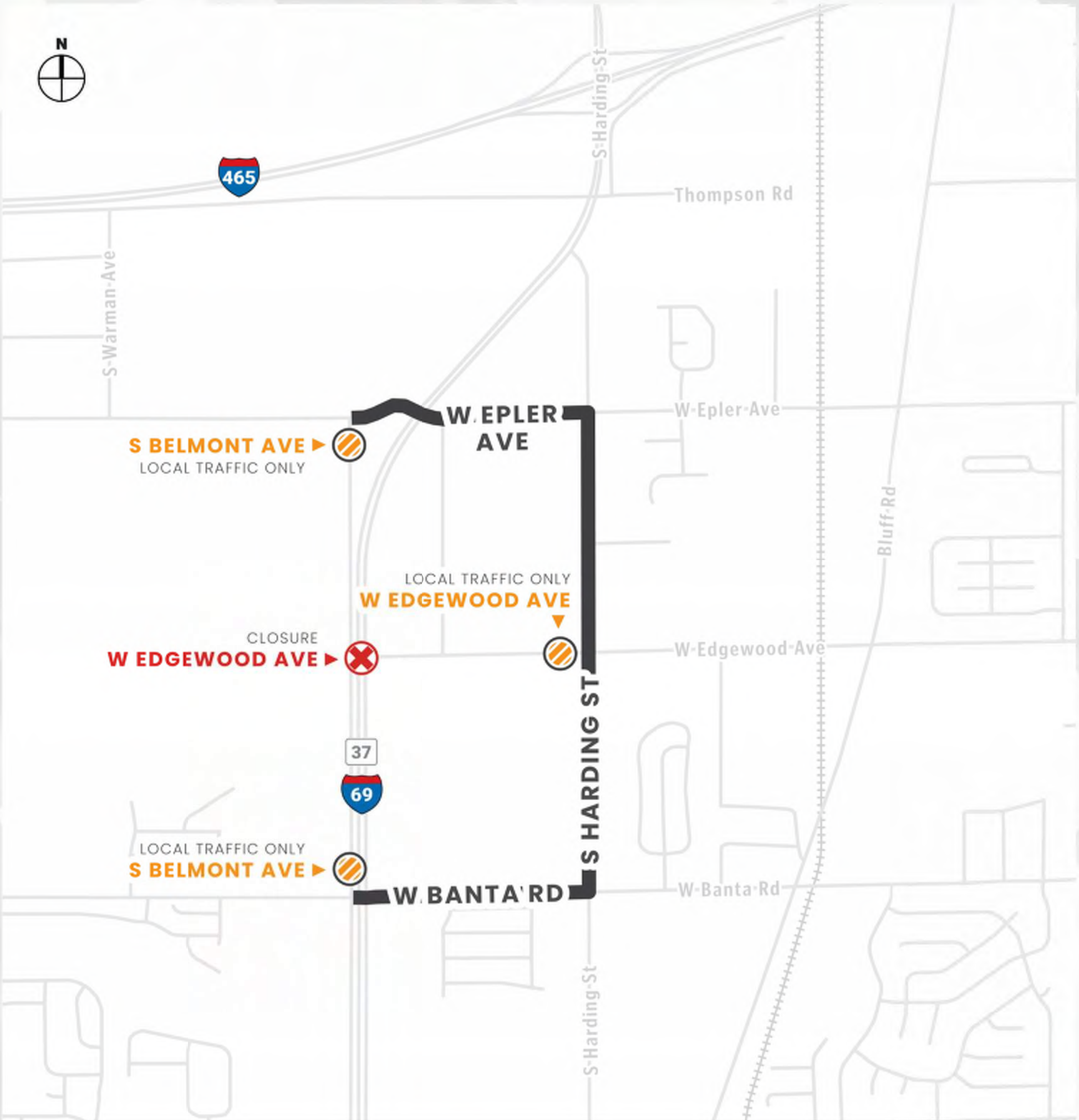

NextLevel

I-69 FINISH LINE

LOCAL DETOUR CONCEPT
Banta Rd Closure

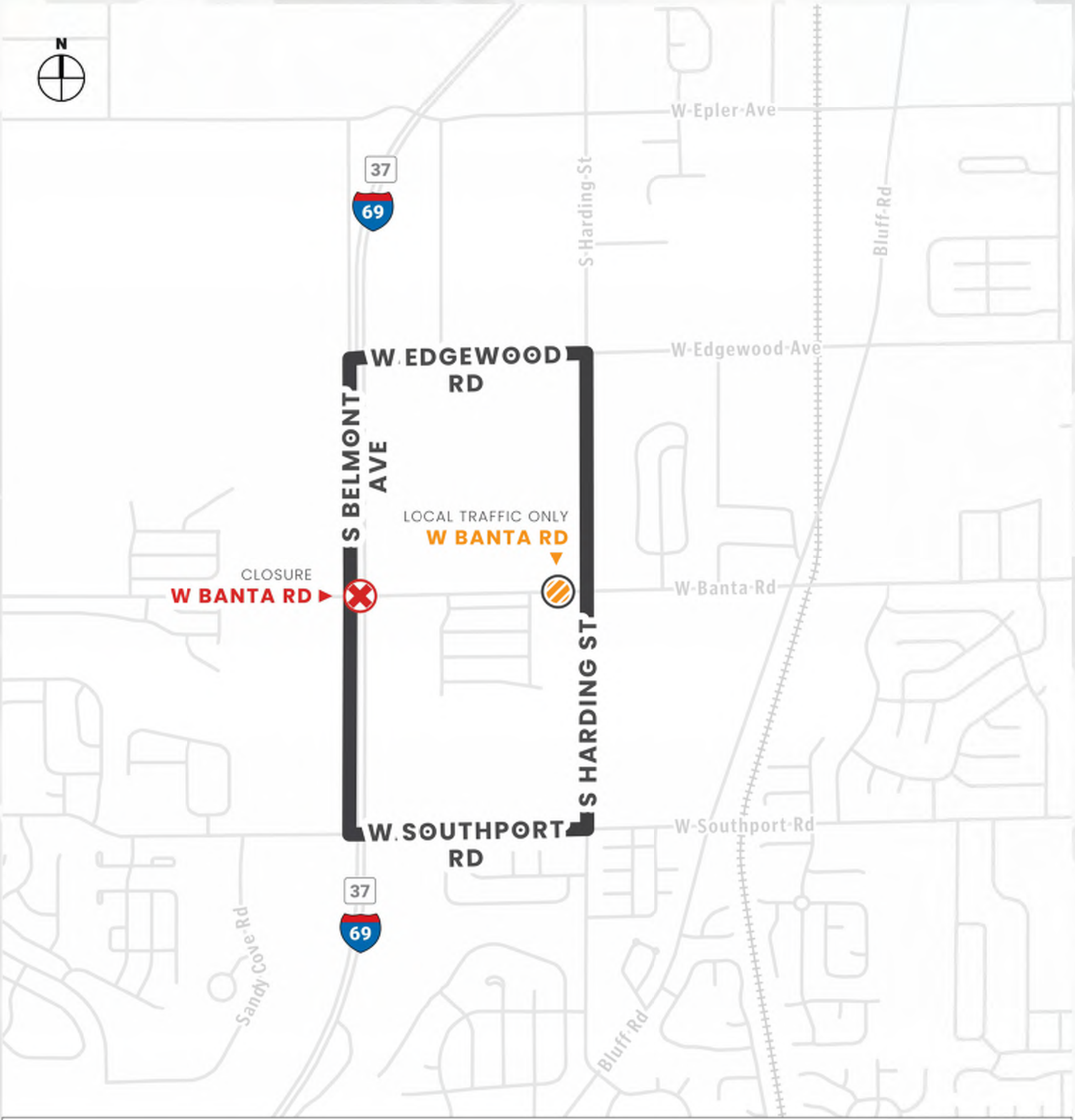

NextLevel

ATTACHMENT 13-1

Reinforced Soil Slopes

Description

This Work shall consist of preparing the design, furnishing the materials, and constructing the reinforced soil slope, RSS, to the lines, grades and dimensions shown in the Design Documents, this special provision, any additional requirements specified by the RSS system supplier in the approved shop drawings and as directed by IFA.

General Requirements

The RSS system shall consist of reinforced fill, soil reinforcement, a facing treatment, and incidental materials designed to provide adequate stability of slopes with inclines of up to 70 degrees which are resistant to erosion and requiring little or no long-term maintenance. Tiered vegetated facing treatment shall be used, unless otherwise specified in the Design Documents.

Reference Standards

American Society for Testing and Materials (ASTM)

1. ASTM D 422 Particle-Size Analysis of Soils
2. ASTM D 698 Laboratory Compaction Characteristics of Soil –Standard Effort
3. ASTM D 1238 Melt Flow (HDPE and PP)
4. ASTM D 1248 Molding and Extrusion (HDPE)
5. ASTM D 1505 Specific Gravity (HDPE)
6. ASTM D 2455 Carboxyl End Group (PET)
7. ASTM D 4218 Carbon Black Content (HDPE)
8. ASTM D 4318 Liquid Limit, Plastic Limit and Plasticity Index of Soils
9. ASTM D 4355 Deterioration of Geotextiles by Exposure to Light, Moisture and Heat in a Xenon Arc Type Apparatus
10. ASTM D 4595 Tensile Properties of Geotextiles – Wide-Width Strip
11. ASTM D 4603 Intrinsic Viscosity (PET)
12. ASTM D 4884 Strength of Sewn or Bonded Seams of Geotextiles
13. ASTM D 5262 Unconfined Tension Creep Behavior of Geosynthetics
14. ASTM D 5321 Shear Strength of Soil-Geosynthetic and Geosynthetic-Geosynthetic Interfaces by Direct Shear
15. ASTM D 6637 Tensile Properties of Geogrids by Single or Multi-Rib Tensile Method
16. ASTM D 6706 Geosynthetic Pullout Resistance in Soil
17. ASTM D 7737 Individual Geogrid Junction Strength

Geosynthetic Research Institute (GRI)

1. GRI:GG4(a) Long-Term Design Strength of Stiff Geogrid
2. GRI:GG4(b) Long-Term Design Strength of Flexible Geogrid

American Association of State Highway and Transportation Officials (AASHTO) and Federal Highway Administration (FHWA) Documents

1. AASHTO LRFD Bridge Design, 8th Edition, 2017.
2. AASHTO LRFD Bridge Construction Specifications, 4th Edition, 2017
3. FHWA/NHI-10-024 and 025, GEC 11 Design and Construction of Mechanically Stabilized Earth Walls and Reinforced Soil Slopes Volumes 1 and 2.

Design Requirements

The design shall be completed in accordance with the reference standards utilizing AASHTO load, resistance, and stability design criteria. The bottom of the RSS shall be established no less than 3 ft below the finished grade at the face of the RSS. No less than a 4-ft wide horizontal bench shall be provided in front of an RSS founded on slopes. Design submittals not in accordance with these reference standards and design criteria or technical/administrative criteria specified will be rejected in their entirety until compliance is achieved.

The RSS supplier shall be responsible for all internal and external stability aspects of the slope at all stages of construction. The design shall provide the required factors of safety/resistance factors using the soil reinforcement long-term nominal tensile strength (T_{al}) and pullout resistance for the reinforced fill proposed.

The soil reinforcement coefficient of interaction and mechanical interlock with the proposed reinforced fill material shall be selected and documented with appropriate test data. The soil reinforcement shall be dimensionally stable and able to retain its geometry under construction stresses and have high resistance to damage during installation considering ultraviolet degradation and all forms of chemical and biological degradation encountered in the reinforced fill. Soil reinforcement coverage ratios must be maintained at no less than 50 percent, and the maximum vertical spacing between primary reinforcement layers is 1.5 feet.

The appropriate test data documenting the connection design capacity with minimal elongation will be required as part of the submittal package for approval. Lap splices in the primary direction of the soil reinforcement will not be allowed.

The design computations shall indicate the factor of safety for the temporary construction and permanent slopes, considering both internal stability and external stability.

External loads, such as those applied through structure foundations, light and sign foundations, from traffic or railroads, and slope surcharge, shall be accounted for in the stability design. The presence of all appurtenances behind, in front of, or passing through the reinforced fill such as drainage structures, utilities, structure foundation elements or other items shall be accounted for in the stability design. The design shall address hydrostatic and erosive forces. Minimum live loads of 250 psf shall be used.

Design-Build Contractor shall avoid placement of utilities within the reinforced fill. Where placement of utilities within reinforced fill is unavoidable, Design-Build Contractor shall provide for access to the utility such that the integrity of the RSS is maintained in the event access to the utility is required in the future.

The design of the soil reinforcement shall account for the strength reduction due to long-term creep, chemical and biological degradation, stage construction issues, and installation damage and shall insure stress levels are below the allowable at the end of a 75-year design life. All components of the RSS, including elements used to form the facing treatment, shall be designed for a 75-yr design life.

Submittals

A minimum of 45 days prior to the Stage 3 Review Submission for the RSS, the Design-Build Contractor shall submit complete design calculations and shop drawings to IFA for review and approval. All submittals shall be sealed by a Registered Professional Engineer and shall contain all details, dimensions, quantities and cross sections necessary to construct the RSS and in accordance with Section 105 of Standard Specifications and, as a minimum, include the following:

1. Plan, Elevation and Cross section sheet(s) as shown in the Design Documents:
   i) Plan view showing the horizontal alignment and offset from the CL of the roadway to the toe and top of the RSS. Beginning and end stations for the RSS system and transition areas shall be shown. These views shall be developed from the plan view begin and end stations of the RSS System.
   ii) Elevation view indicating stations and elevations at the top and bottom of the RSS system. The stations and elevations of the final ground line along the length of the wall shall also be indicated. These views shall be developed from the elevation view top and bottom lines of the RSS system.
   iii) Location, length, size, coverage ratio, and type of soil reinforcement shall be shown. The stations or elevations where changes in soil reinforcement occur shall be clearly indicated.
   iv) Typical cross section(s) showing the elements and limits of the RSS system. These views shall include the reinforced fill, soil reinforcement, facing treatment, and their relationship to the right-of-way limits, excavation cut slopes, retained embankment, existing ground conditions and the finished grade line.
   v) Facing treatment details indicating type, elements and all dimensions necessary to construct the facing system. The details shall include facing interaction with the soil reinforcement and reinforced fill. The specifications for installation and establishment of vegetated facings shall be provided and shall be in accordance with the details on the plans. The selected facing shall provide a stable and erosion and sloughing resistant surface layer that will permit compaction against and near the face of the slope.
   vi) Locations of signs, lighting, guardrail posts, future locations of piles, and other infrastructure within the reinforced fill shall be indicated. Details for placing soil reinforcement around such elements shall also be provided.
   vii) Any general notes required for construction.
2. Design Computations: The shop drawings shall be supported by detailed computations for each design section indicating the design criteria specified have been met.
3. Manufacturer’s Certification: The Design-Build Contractor shall include manufacturer’s certifications and test results indicating that the proposed soil reinforcement, reinforced fill and facing treatment are in accordance with the design parameters used and the materials portion of this specification. IFA reserves the right to obtain random samples of materials for testing by IFA to confirm the certification values. No Work or ordering of materials for the structure shall commence until the submittal has been approved by IFA.
4. Design-Build Contractor’s certification:
   i) The specific RSS system proposed for use on this project shall have been successfully used on a minimum of five similar projects and been successfully installed on a minimum of 1,000,000 square feet of

elevation view.

ii) The Design-Build Contractor shall have a minimum of 20,000 square feet of experience with the proposed RSS system. Contact names and telephone numbers shall be listed for projects used to document the 20,000 square feet.

Delivery, Storage and Handling

The Design-Build Contractor shall check all materials upon delivery to ensure that the proper type, grade, color and material certification have been received. The Design-Build Contractor shall protect materials from damage due to jobsite conditions and in accordance with the manufacturer's recommendations. Damaged materials shall not be incorporated into the Work.

Materials

Definitions

1. Soil Reinforcement - geosynthetic formed by a regular network of integrally connected tensile elements with apertures of sufficient size to allow interlocking with surrounding soil, rock or earth and function as ground reinforcement.
2. Reinforced Fill - compacted fill that is within the reinforced soil volume as shown on the plans.
3. Foundation Soil – soil beneath entire RSS.
4. Retained Soil – soil behind reinforced fill of the RSS.
5. Facing Treatment – the elements used at the face of the slope to provide a stable condition and to promote a vegetated condition with little to no maintenance required.

Soil Reinforcement

Geosynthetic Reinforcement - shall be evaluated in accordance with FHWA GEC 011 with the following additions and clarifications.

1. The minimum RF_{ID} shall be ≥ 1.05.
2. The minimum RF_D shall be ≥ 1.10.
3. The minimum FS_{UNC} shall be ≥ 1.5.
4. Geogrids providing a minimum junction strength of 40 lbs per foot in accordance with GRI: GG2 and all geotextiles shall have a minimum mass of 8 oz/sy and meet the strength requirements of AASHTO M-288 Class 1 geotextile.
5. Geogrids not providing a minimum stiffness (flexural rigidity) of 30,000 mg-cm in accordance with ASTM D1388 and all geotextiles shall be staked during placement in accordance with Section 3.1.B.
6. PET geosynthetics shall be coated with a suitable coating immutably bonded to the PET bundles. The coating shall contain a minimum of 1% carbon black measured in accordance with ASTM 4218. Geogrids not meeting this requirement and all geotextiles shall use a minimum RF_D = 1.6.
7. PET geosynthetics shall possess a Molecular Weight ≥ 25,000 g/m in accordance with GRI: GG8 and a carboxyl end group number ≤ 30 in accordance with GRI: GG7. PET geosynthetics not meeting these criteria shall use a minimum RF_D = 2.0.
8. HDPE geogrids shall have a melt flow index value≥ 0.88. HDPE geogrids not meeting these criteria shall use a minimum RF_D = 2.0.
9. Manufacturing Quality Control - The geosynthetic manufacturer shall have a quality control program that includes QC testing no less frequently than each 400,000 square feet of production. The testing, as a minimum, shall include Tensile Strength in accordance with ASTM D4595.

Reinforced Fill

Reinforced fill shall consist of soil meeting the Requirements presented in Table 3-1 of GEC 011.

Facing Treatment

The facing treatment shall be vegetated unless otherwise specified in the Design Documents.

The vegetated facing treatment materials shall include any top soil, compost, seeding, sod, erosion controls, watering provisions, or other vegetative systems complying with Section 621 of the Standard Specifications. R S S shall be constructed such that the vegetated portion of the slope is completed prior to the latest seeding dates shown in Section 621.12 of the Standard Specifications.

The tiered facing shall be established using cellular confinement or permanent welded wire forms.

Construction Requirements

General

The Design-Build Contractor shall obtain technical assistance from the supplier during slope erection to demonstrate proper construction procedures and shall include any costs related to this technical assistance in this item.

The foundation soils supporting the RSS shall be graded for a width equal to the length of the lowest soil reinforcement length. Cut slope surfaces shall be benched to allow the RSS to be keyed into existing retained embankment. Prior to soil reinforcement placement, the foundation soils shall be compacted.

Foundation soils found to be unsuitable shall be removed and replaced as directed by the Design-Build Contractor’s geotechnical engineer. Water shall be diverted from the area where soil reinforcement is being placed and soil is being compacted.

At each soil reinforcement level, the reinforced fill shall be roughly leveled and compacted before placing the soil reinforcement. Reinforcement placement shall be installed in accordance with the manufacturer’s recommendations and as shown on the approved shop drawings.

Place only that amount of reinforcement required for immediately pending Work to prevent undue damage. After a layer of soil reinforcement has been placed, the next succeeding layer of reinforced fill shall be placed and compacted. After the required facing treatment is installed and a series of reinforced fill lifts are placed to the next level of soil reinforcement, the next soil reinforcement layer shall be installed, and the process shall be repeated until the RSS height is completed. Soil reinforcement layers shall be laid flat, pulled tight prior to backfilling, and held in place with pins or other methods. Each soil reinforcement layer shall be placed to within 3 inches vertically of that shown on the shop drawings.

Where future foundations, such as light and sign foundations, are planned to be installed through the reinforced soil fill, temporary casing or other

means of providing future construction access shall be provided. Excavation, including drilling, through the reinforced fill is not permitted.

Reinforced fill shall be placed and compacted in accordance with the contract requirements. Reinforced fill shall not be placed under freezing conditions. Reinforced fill shall be placed, spread, and compacted in such a manner to avoid the development of wrinkles and/or displacement of the soil reinforcement. Where retained embankment is to be placed behind the RSS, embankment placement shall closely follow placement of the reinforced fill. Reinforced fill and retained embankment shall be graded away from the slope crest and rolled at the end of each work day to prevent ponding of water on surface of the reinforced soil mass.

A minimum fill thickness of 6 inches is required prior to operation of tracked vehicles over the soil reinforcement and turning of tracked vehicles shall be kept to a minimum to prevent displacing the soil reinforcement. If approved by IFA, rubber-tired equipment may pass over the reinforcement at speeds of less than 5 mph. Sudden braking and sharp turning shall be avoided. No rubber-tired wheel traffic will be allowed in direct contact with coated geosynthetic geogrid, as damage to the coating could result.

Compaction adjacent to the backside of the facing treatment shall be achieved by use of light weight mechanical tampers, rollers, vibratory system or other methods to provide short- and long-term erosion and facing stability.

For the vegetated facing treatment, the construction of any top soil, compost, seeding, sod, mulching, erosion controls, watering, shall be in accordance with the Standard Specifications unless otherwise specified in the approved shop drawings.

Construction and construction tolerances shall be in accordance with AASHTO Bridge Construction Specifications Section 7 with the following additions or clarifications:

1. A minimum of 1 cubic foot of unit drainage fill shall be used for each square foot of slope face and shall be placed between and behind the facing units and shall extend back from the face of the wall a minimum of 2 feet. Geotextile is not an acceptable substitute for unit drainage fill unless the entire reinforced fill zone is in accordance with Section 7.3.6.3 and connection strength requirements can be met without unit drainage fill.
2. Soil reinforcement shall be staked at the corners and on 12-foot centers along the roll edges to prevent wrinkling or other distortion of the reinforcement during backfill placement.

Basis of Item

The RSS shall be quantified in square feet of vertical projected slope face area. The RSS will be quantified from the top of the RSS to the bottom of the RSS for the length of the slope as shown in the Design Documents. Any additional face area below or above the top or bottom of plan lines to satisfy the design stability requirements or stepping of the facing will be not be measured but considered included in the measured area defined above.

The items list shall include the following:

Item No.	Item Description	Unit Symbol

203-11340 Reinforced Soil Slope .....SFT

The following shall be considered incidental to this item:

Design, supply, and installation of the RSS including any excavation, base leveling pad, foundation soil preparation, soil reinforcement and placement of soil reinforcement, compaction, unit drainage fill, reinforced backfill, retained backfill, facing elements and facing treatment, subdrain, and other items specified on the approved shop drawings, equipment, materials and labor necessary to construct the RSS.

ATTACHMENT 13-2

EMBANKMENT OTHER THAN ROCK, WITH STRENGTH OR DENSITY CONTROL

SECTION 202.23, BEGIN LINE 997, DELETE AND INSERT AS FOLLOWS:

203.23 Embankment other than Rock, with Strength or Density Control

The compaction will be determined by dynamic cone penetrometer, DCP, testing in accordance with ITM 509 and the moisture content in accordance with ITM 506. ~~Soil classification will be performed in accordance with ITM 512 and the following DCP blow counts will be used for compaction control:~~

A test strip shall be constructed for density verification. Density verification for each test strip will be in accordance with AASHTO T 310 in direct transmission mode for each type of material. This test strip procedure shall be used to estimate the number of DCP blow counts to represent 95% percent compaction requirements in accordance with AASHTO T 180.

The test section shall be approximately 225 ft long and 24 ft wide and consist of no less than two lifts and be made where embankment fill is being constructed. The natural ground surface shall be proof rolled in accordance with 203.26 prior to construction of the test section lift. The soil in the test section shall meet the requirements of 203.09 and 203 23. The DCP and moisture acceptance tests on each underlying lift will meet the specification requirements. The moisture acceptance tests on the top lift will meet the specification requirements.

The roller shall be checked to assure that the equipment complies with the specification requirements. The speed of the roller and the frequency of vibratory rollers shall be consistent throughout the test section. There shall be no stopping or turning within the established test section.

Procedure – Number of Roller Passes

Initially roll the top lift of the test section with four to six applications of the compaction roller.

- Note 1: A roller application is defined as one pass of the roller over the entire test section.
- Note 2: The roller that is used for normal production compaction shall be used for the test section.

Following the initial applications with the compaction roller, obtain 10 random DCP tests for 12 in. in accordance with 203.23 and 10 density tests in accordance with AASHTO T 310 with a 12-in. depth and conducted in direct transmission mode. Tests shall be spaced uniformly throughout the test section at the following locations. Each location shall be marked with paint.

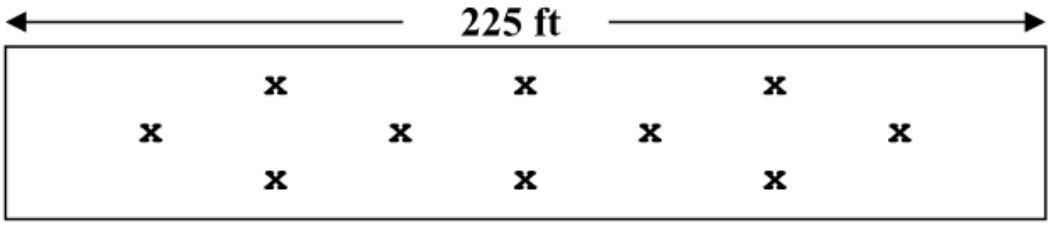

Average the 10 DCP test values and the AASHTO T 310 density test values. When the average of the 10 AASHTO T 310 density tests meet the 95% compaction requirements of AASHTO T 180, the number of roller passes that was used and the corresponding average DCP blow count is reported. The test section is complete.

Additional rolling is required when the average AASHTO T 310 density test values do not meet the 95% compaction requirements of AASHTO T 180. After the additional roller passes are complete, test the same 10 random locations 1 ft from each original test site with the DCP and density test.

The information recorded from the test section shall include the date, location, number of passes to achieve the target density value, average DCP blow count to meet target density and the DCP test data for the initial passes and each additional pass of the roller, and the type of roller used to compact the test section shall be reported.

The moisture compaction range for all soil types shall be as follows:

Soil Type	Moisture Compaction Range
Clay (< 105 lb/cu ft)	-2 to +2% of optimum moisture content
Clay (105 - 114 lb/cu ft)	-2 to +1% of optimum moisture content
Silty and Sandy (> 114 lb/cu ft)	-3% to optimum moisture content
Granular	5 to 8%

DCP testing and verification testing, AASHTO T 310 in direct transmission mode, will be performed in accordance with the Frequency Manual at random locations determined in accordance with ITM 802.

Moisture testing will be performed in accordance with the Frequency Manual.

If the embankment material is too wet or too dry, either the material shall be aerated to remove excess moisture or watered and disked to increase the moisture content, until in either case the moisture content is within the specified range. Sufficient moisture tests will be made to ensure that this range is maintained throughout the embankment.

The embankment material shall be placed in uniform level layers, left properly shaped as set out above, and compacted with approved compacting equipment. Compacting equipment shall include at least one 3-wheel roller or other approved compacting equipment capable of providing a smooth and even surface on the embankment as directed.

Each lift shall be disked or treated by some other mechanical means which shall ensure the

breaking up of any existing lumps and clods.

The loose depth of each lift shall be such that the required compaction can be obtained, but in no case shall it exceed 8 in. Where a tamping roller is used, the loose depth of lift shall not exceed the length of the tamper feet. The surface area of the end of each foot of the tamping roller shall be no less than 5 1/2 sq in.

ATTACHMENT 13-3

Method of Making Strength, Stiffness and Density Tests

SECTION 203.24, LINE 1125, INSERT AND REPLACE AS FOLLOWS:

203. 24 Method of Making Strength, Stiffness and Density Tests

The strength of chemically modified or compacted soils will be determined by DCP in accordance with ITM 509. The stiffness of chemically modified soils or aggregates will be determined by the LWD, in accordance with ITM 508. The density of soils and aggregates, as a percent of compaction, will be based on the maximum dry densities unless otherwise specified or directed. DCP field compaction tests will be performed in accordance with this section. The required compaction shall be obtained before additional material is placed.

(a) Laboratory

The DCP criteria will be established on representative soils by performing ASTM D 1140, AASHTO T 88, AASHTO T 89, AASHTO T 90, and AASHTO T 180 using Method A for soils and Method D for granular materials.

The optimum moisture content, maximum dry density, and gradation of aggregates will be determined by performing AASHTO T99 Method C, AASHTO T 11 and AASHTO T 27 on representative sample of aggregates.

(b) Field

The soil strength of compacted soils or compacted chemically modified soils will be determined by DCP in accordance with ITM 509 and the stiffness of chemically modified soils or aggregates will be determined by LWD in accordance with ITM 508. The moisture content will be determined in accordance with ITM 506 or AASHTO T 255.

At the discretion of IFA, verification of in situ field density and associated DCP values may be performed in accordance with AASHTO T 310 in direct transmission mode to a depth of 12 in. This testing criteria will govern in the event of a discrepancy in the acceptance.

Acceptance testing of chemically modified soils and coarse aggregates will be determined by LWD testing in accordance with ITM 508. The allowable deflection will be determined from a test section or will be specified. Test sections shall be constructed in accordance with ITM 514 in the presence of a representative of the INDOT Geotechnical Services Division for other materials not included in the Tables to determine the allowable deflection. The compaction procedures shall be in accordance with 203.23, 215, 301, 302, and 303. Proofrolling of compacted aggregate shall be performed in accordance with 203.26.

The allowable average deflection and maximum deflection for chemically modified soils, aggregate over chemically modified and untreated soils shall be in accordance with the following:

Table 1. Allowable Average Deflection and Maximum Deflection for Chemically Modified Soils and Aggregate over Chemically Modified Soils

Material Type	***Allowable Average Deflection (mm)***	***Maximum Deflection at a Single Test Location (mm)***
Lime Modified Soil	*≤ 0.30*	*0.35*
Cement Modified Soil	*≤ 0.27*	*0.31*
Aggregate over Lime Modified Soil	*≤ 0.30*	*0.35*
Aggregate over Cement Modified Soil	*≤ 0.27*	*0.31*

Table 2. Aggregate over Untreated Soils: Where Proofrolling Can Be Performed

Material Thickness	***Allowable Average Deflection (mm)***	***Maximum Deflection at a Single Test Location (mm)***
6 in. Thick Coarse Aggregate No. 53	*≤ 0.51*	*0.57**
12 in. Thick Coarse Aggregate No. 53	*≤ 0.34*	*0.40***
18 in. Thick Coarse Aggregate No. 53	*≤ 0.31*	*0.35***

** When deflection exceeds this value, the area shall be recompacted or undercut as directed. The failed area will be delineated prior to excavation. Deflection will be measured based on the top 6 in. thick coarse aggregate No. 53 material placed for undercut.*
*** The Design-Build Contractor shall recompact the coarse aggregate No. 53 in accordance with 301.06*

Table 3. Aggregate over Untreated Soils: Where Proofrolling Cannot be Performed

Material Thickness	***Allowable Average Deflection (mm)***	***Maximum Deflection at a Single Test Location (mm)***
6 in. Thick Coarse Aggregate No. 53	*≤ 0.60*	*0.65**
12 in. Thick Coarse Aggregate No. 53	*≤ 0.47*	*0.52***
18 in. Thick Coarse Aggregate No. 53	*≤ 0.44*	*0.49***

** When deflection exceeds this value, the area shall be recompacted or undercut as directed. The failed area will be delineated prior to excavation. Deflection will be measured based on the top 6 in. thick coarse aggregate No 53 material placed for undercut.*

*** The Design-Build Contractor shall recompact the coarse aggregate No. 53 in accordance with 301.06.*
Note: IFA will perform the moisture test on in-situ soils prior to placement of coarse aggregate. If the result of the moisture test is > 13%, IFA will contact the Geotechnical Section.

Acceptance of the compaction of chemically modified soils or aggregate will be determined by averaging three LWD tests obtained at a random station determined in accordance with ITM 802, for each 1,500 ft length of chemically modified soil for each two-lane pavement section, or for each 800 t of compacted aggregate. Where the construction area is 8 ft wide or more, the location of the three tests will be at 2 ft from each edge of the construction area and at 1/2 of the width of the construction area. Where the construction area is less than 8 ft wide, the location of the three LWD tests will be spaced at 1/2 of the width of the construction area and spaced 5 ft apart in the longitudinal direction. The average deflection shall be equal to or less than the maximum deflection determined by the test section.

If the average deflection is not equal to or less than the maximum deflection for aggregates, a sample of the aggregate shall be obtained in accordance with AASHTO T 2 and a moisture content test shall be performed in accordance with AASHTO T 255 or ITM 506 to determine if the moisture content is within the acceptable limits. If the moisture content is not within the acceptable limits, additional LWD tests may be taken at the same locations after 24 h if the moisture content is within the acceptable limits at the time of testing. The aggregate will be accepted if the LWD tests are equal to or less than the maximum deflection.

ATTACHMENT 14-1

UNIQUE SPECIAL PROVISIONS

STRUCTURES

A. Bridge Inspection Coordination.....2
B. Terminal Joint Retrofit, Polymer Modified Asphalt 6
C. Modified Terminal Joints.....8
D. Metallized Structural Steel.....12
E. Sound Barrier Fire Hydrant Access Door Feature.....25
F. Pile Sleeves for Mechanically Stabilized Earth Retaining Walls.....26
G. Pile Driving Vibration Monitoring.....28
H. Alternate Class C Concrete.....29
I. Structural Mass Pour Concrete.....30
J. Formliner for Piers and MSE Walls.....35
K. Embedded Galvanic Anodes.....39
L. Stainless Steel Reinforcing Bars.....42
M. Precast Prestressed High Strength Concrete.....45
N. Post-Tensioning Works.....56
O. Anti-Graffiti Coat.....71
P. Modified Surface Seal.....72
Q. Disk Bearings.....76
R. Waterway Maintenance of Traffic 80
S. Articulated Concrete Block 81
T. Limiting Movement Criteria for Permanent Earth Retention System for Cut-Wall Application.....83
U. Temporary Causeway.....84
V. Pump Around.....86
W. Sound Barrier Systems.....88

BRIDGE INSPECTION COORDINATION

The following routine, fracture critical, underwater or special bridge inspections are due to be performed by the INDOT's Bridge Inspection Office, or its authorized representative, on each bridge within the construction limits of the Project.

Structure Number	NBI Number	Location	Inspection Type	Last Inspection Date (MM/DD/YY)	Frequency (Mos.)	First Scheduled Inspection (MM/YY)	Second Scheduled Inspection (MM/YY)
037-49-05024 BNBL	012430	0.4 miles north of County Line Road	Routine	07/03/19	24 Months	07/21	07/23
037-49-05024 JASB	012440	0.4 miles north of County Line Road	Routine	07/03/19	24 Months	07/21	07/23
CV 037-049-141.56	93003305	1.07 miles north of County Line Road	Culvert	08/05/19	60 Months	08/24	08/29
037-49-05025 BNBL	012450	2.23 miles south of I-465	Routine	07/03/19	24 Months	07/21	07/23
037-49-05025 JASB	012460	2.23 miles south of I-465	Routine	07/03/19	24 Months	07/21	07/23
I465-157-04721 B	051000	0.34 miles east of SR 67	Routine	08/14/18	24 Months	08/20	08/22
I465-158-04459 B	051010	1.19 miles east of SR 67	Routine	08/14/18	24 Months	08/20	08/22
I465-158-04458 CEBL	051020	2.44 miles west of SR 37	Routine	08/14/18	24 Months	08/20	08/22
I465-158-04458 CWBL	051030	2.44 miles west of SR 37	Routine	08/14/18	24 Months	08/20	08/22
I465-159-04456 FEBL	051040	1.97 miles west of SR 37	Routine	08/13/18	24 Months	08/20	08/22
I465-159-04456 FEBL	051040	1.97 miles west of SR 37	Underwater	10/30/18	60 Months	10/23	10/28
I465-	05105	1.97	Routine	08/13/18	24	08/20	08/22

159-04456 FWBL	0	miles west of SR 37			Months		
I465-159-04456 FWBL	051050	1.97 miles west of SR 37	Underwater	10/30/18	60 Months	10/23	10/28
I465-161-08742	051058	0.17 miles west of SR 37	Routine	08/13/18	24 Months	08/20	08/22
I465-161-04455 BEBL	051060	2.1 miles west of US 31	Routine & Special	08/13/18	24 Months	08/20	08/22
I465-161-04455 BWBL	051070	2.1 miles west of US 31	Routine & Special	08/13/18	24 Months	08/20	08/22
I465-161-02246 BEBL	051080	0.53 miles east of SR 37	Routine	07/27/18	24 Months	09/20	09/22
I465-161-02246 JBWB	051090	0.53 miles east of SR 37	Routine	07/27/18	24 Months	09/20	09/22
I465-162-04454 CEBL	051100	0.81 miles east of SR 37	Routine	07/25/18	24 Months	07/20	07/22
I465-162-04454 BWBL	051110	0.81 miles east of SR 37	Routine	07/25/18	24 Months	07/20	07/22
I465-162-04452 CEBL	051120	0.45 miles west of US 31	Routine	07/25/18	24 Months	07/20	07/22
I465-162-04452 BWBL	051130	0.45 miles west of US 31	Routine	07/25/18	24 Months	07/20	07/22
I465-162-04451 BWBL	051140	0.31 miles west of SR 31	Routine	07/25/18	24 Months	07/20	07/22
I465-162-04451 BWBL	051140	0.31 miles west of SR 31	Special	04/18/18	60 Months	04/23	04/28
(I465)31-49-04450 B	051150	0.10 miles west of US 31	Routine & Special	07/25/18	24 Months	07/20	07/22
031-49-04448 B	009440	0.22 miles	Routine	07/25/18	24 Months	07/20	07/22

		north of SR 135					
(I465)31-49-04449 B	051160	0.10 miles east of US 31	Routine & Special	07/25/18	24 Months	07/20	07/22
I465-163-04447 BEBL	051170	0.38 miles east of US 31	Routine	07/25/18	24 Months	07/20	07/22
(I465)431-49-04445 B	032565	0.57 miles east of US 31	Routine & Special	07/25/18	24 Months	07/20	07/22
I465-164-02245	051180	0.71 miles east of US 31	Routine	07/24/18	24 Months	07/20	07/22
I465-164-04444 CEBL	051190	1.21 miles east of US 31	Routine	07/24/18	24 Months	07/20	07/22
I465-164-04444 BWBL	051200	1.21 miles east of US 31	Routine	07/24/18	24 Months	07/20	07/22
I465-164-04798 A	051210	0.68 miles west of the intersection of I-65 and I-465	Routine	07/24/18	24 Months	07/20	07/22
CV I465-049-00.30	93002944	0.031 miles west of Carson Ave	Culvert	03/28/19	60 Months	03/24	03/29
I465-165-04442 B	051220	1.96 miles east of US 31	Routine	07/24/18	24 Months	07/20	07/22
I465-155-09161	076488	0.44 miles south of I-70	Routine	08/20/18	24 Months	08/20	08/22
I465-156-02152 JBNB	050980	0.79 miles south I-70	Routine	08/20/18	24 Months	08/20	08/22
I465-156-02152 BSBL	050990	0.79 miles south of I-70	Routine	08/20/18	24 Months	08/20	08/22
49-3710L	4900373	0.58 miles	Routine	07/12/18	24 Months	07/20	07/22

		east of Mann Road					

Each bridge inspection shall be identified in the schedule of Work in accordance with 108.04 and in accordance with the Technical Provisions. Portions of each bridge replaced, reconstructed, or repaired and subsequently used for maintenance of traffic will be inspected prior to being opened to traffic. Design-Build Contractor shall notify IFA a minimum of two weeks prior to the construction completion of a bridge and prior to being opened to traffic for INDOT to perform its initial inspection.

Notice from IFA will be given no less than seven days prior to each bridge inspection. Access, coordination and cooperation for the required bridge inspections shall be provided by the Design-Build Contractor.

TERMINAL JOINT RETROFIT, POLYMER MODIFIED ASPHALT

Description

This Work shall consist of constructing a terminal joint with a 3 in. polymer modified asphalt product topping in accordance with 105.03.

Materials

Polymer modified asphalt shall consist of polymer modified asphalt binder and manufacturer-specific aggregate. The product shall be one of the following:

FibreJoint by Fibrecrete Preservation Technologies
131 St. James Way
Mount Airy, NC 27030
www.fibrecretept.com

Matrix 501 or Matrix 502 by Crafco, Inc.
420 N. Roosevelt Ave.
Chandler, AZ 85226
www.crafco.com

RP 6297 or 6297 W/AGG by Right Pointe
234 Harvestore Drive
Dekalb, IL 60115
www.rightpointe.com

Thorma-Joint by Dynamic Surface Applications
373 Village Road
Pennsdale, PA 17756
www.dsa-ltd.com

Wabo Expandex by Watson Bowman Acme Corp.
95 Pineview Drive
Amherst, NY 14228
www.wbacorp.com

The backer rod and steel plate components of the above products shall be omitted. The binder and aggregate may be pre-blended or blended on site. The product shall be in accordance with ASTM D 6297, Standard Specification for Asphaltic Plug Joints for Bridges. A Type C certification shall be submitted and shall include the product trade name and manufacturer.

Construction Requirements

The Design-Build Contractor shall construct the sleeper slab, polyethylene bond breaker, and HMA intermediate mixtures in accordance with 503.03. The intermediate HMA layers shall end 3 in. below the surface of the adjacent pavement to place the required thickness of polymer modified asphalt. The total thickness of the polymer modified joint material shall not exceed 4 in. HMA Surface, Type B shall be omitted.

The manufacturer’s instructions for the polymer modified asphalt product shall be provided to IFA at least one week prior to placement. Instructions shall cover the 3 in. surface placement and all product modifications required for patching a depth in excess of 3 in.

The existing terminal joint asphalt material shall be removed to the top of the existing sleeper slab. Removal shall be by milling in accordance with

306 or as directed by IFA. The exposed vertical faces of the adjacent concrete shall be clean, free of asphalt or other contaminants, and dry prior to polymer modified asphalt placement. Damage to adjacent concrete surfaces during removal shall be repaired as directed by IFA.

The polymer modified asphalt shall be prepared in accordance with the manufacturer's instructions. Each lift shall be allowed to cool for a minimum of 15 minutes prior to placing successive lifts. The binder and aggregate shall be mixed and placed in lifts not to exceed 2.5 in. The top lift shall be between ½ in. and 1.0 in. The completed joint surface shall match the grade of the adjacent pavement.

The completed joint shall be allowed to cool to a surface temperature less than 150°F and shall not be tacky prior to being opened to traffic.

Basis of Item

The polymer modified asphalt terminal joint shall be quantified by the square foot. Asphalt removal and surface preparation shall not be quantified.

The items list shall include the following:

Item No.	Item Description	Pay Unit Symbol
503-12480	Terminal Joint, Retrofit Polymer Modified Asphalt	SFT

The following shall be considered incidental to this item:

Removing existing asphalt joint material, surface preparation, repairing sleeper slabs and adjacent pavement, and all incidental labor, equipment, and materials required to complete this Work.

SECTION 503, BEGIN LINE 9, DELETE AND INSERT AS FOLLOWS:

503.02 Materials

Materials shall be in accordance with the following:

Chemical Anchor System.....901.05
Dowel Bars.....910.01(b)10
Epoxy Coated Reinforcing Bars.....910.01(b)9
Joint Filler.....906.01
Joint Materials.....906
PCC Sealer/Healers.....901.06
Reinforcing Bars.....910.01
Concrete, Class A.....702
Support Devices.....910.01(b)9
Threaded Tie Bar Assembly.....910.01(b)2
Curing Materials.....912.01

For Jointed Reinforced Concrete Pavement, materials for the concrete shall be in accordance with 502.03 and the concrete mix criteria shall be in accordance with 502.04.

SECTION 503, BEGIN LINE 114, DELETE AND INSERT AS FOLLOWS:

(e) Terminal Joints

~~Terminal joints shall consist of a sleeper slab, polyethylene bond breaker, and HMA mixtures. The polyethylene bond breaker shall be an approved polyethylene sheeting having a thickness of 6 mils or greater. HMA mixtures shall consist of type B surface and intermediate mixtures in accordance with 402.04. A MAF in accordance with 402.05 will not apply. Aggregate requirements of 904.03(d) do not apply. The portion of the sleeper slab on which the polyethylene bond breaker is to be placed shall be finished to a smooth trowel finish.~~

A terminal joint of the type specified shall be constructed at the locations as shown on the Design Documents. The embankment shall be shaped to the required grade and section, free from all ruts, corrugations, or other irregularities, and uniformly compacted and approved in accordance with 203. The embankment shall be furnished within a tolerance of ½ in. from the grade as shown on the Design Documents. The subgrade shall be prepared as shown on the Design Documents and in accordance with 207. The sleeper slab shall be placed on top of the prepared subgrade.

A modular joint is required for an integral structure with an expansion length greater than 400 ft. to the terminal joint. The modular joint shall be in accordance with 724.

1. Terminal Joint, Type CRCP

Terminal joint, type CRCP shall consist of sleeper slabs, polyethylene bond breaker, pre-compressed foam joint, and CRCP transition slab. The polyethylene bond breaker shall be an approved polyethylene sheeting having a thickness of 10 mils or greater. The portion of the sleeper slab on which the polyethylene bond breaker is to be placed shall be finished to a smooth trowel finish. The pre-compressed foam joint shall be in accordance

with the Recurring Special Provision titled "Pre-Compressed Foam Joint" and as shown on the Design Documents. The CRCP transition slab shall be in accordance with the Special Provision titled "Continuously Reinforced Concrete Pavement" and as shown on the Design Documents.

2. Terminal Joint, Type PCCP

Terminal joint, type PCCP shall consist of a sleeper slab, polyethylene bond breaker, pre-compressed foam joint, and jointed reinforced concrete pavement, JRCP, transition slabs. The polyethylene bond breaker shall be an approved polyethylene sheeting having a thickness of 6 mils or greater. The portion of the sleeper slab on which the polyethylene bond breaker is to be placed shall be finished to a smooth trowel finish. The pre-compressed foam joint shall be in accordance with the Recurring Special Provision titled "Pre-Compressed Foam Joint" and as shown on the Design Documents. The longitudinal and transverse joints of the jointed reinforced concrete pavement transition slabs shall be in accordance with 503 and as shown on the Design Documents. The concrete delivery and placement of concrete for JRCP shall be in accordance with 502 and as shown on the Design Documents. Steel reinforcement shall be epoxy coated and placed in accordance with 703. The metal chairs, spacers, clips, wire, or other mechanical means used for fastening or holding reinforcement in place shall be epoxy coated.

3. Terminal Joint, Type HMA

Terminal joint, type HMA, shall consist of a sleeper slab, concrete lug, polyethylene bond breaker, and pre-compressed foam joint. The polyethylene sheeting having a thickness of 6 mils or greater. The portion of the sleeper slab on which the polyethylene bond breaker is to be placed shall be finished to a smooth trowel finish. A type A construction joint shall be constructed as shown on the plans. The pre-compressed foam joint shall be in accordance with 724 and as shown on the Design Documents.

The saw cut shall be sealed with hot pour joint sealant in accordance with 906.02(a)2.

SECTION 503, AFTER LINE 151, INSERT AS FOLLOWS:

(h) ***Expansion Joint with Load Transfer***

Expansion joints with load transfer shall be constructed at the locations shown on the Design Documents. The joint shall be an assembly of dowel bars, expansion caps, and joint filler components as shown on the Design Documents. The components shall be supported by an approved welded wire assembly which holds the components rigid and in proper alignment during placement of the concrete.

Damaged or repaired joint filler shall not be used. The joint filler shall be held in a position which is normal to the surface and secured in place. The bottom of the joint filler shall be set firmly in place on top of the subgrade. The top of the joint filler shall be parallel to the pavement surface and be the full width of the pavement. The expansion joint assembly shall be held in place in accordance with 503.04(g). Finished joints shall deviate no more than ¼ in. in the horizontal alignment from a straight line. There shall be no offsets between adjacent sections when the joint filler consists of more than one section. No plugs or leakage of concrete shall be allowed to occur through the joint filler or into the air gap of expansion caps.

The expansion joint opening shall be sealed with hot pour joint sealant in accordance with 906.02(a)2.

SECTION 503, DELETE LINES 239 THROUGH 250.

SECTION 503, LINE 239, INSERT AS FOLLOWS:

503.07 Basis of Item

D-1 contraction joints, expansion joint with load transfer, pre-compressed foam joints, structural expansion joint M, and terminal joints shall be quantified by the linear foot as measured along the centerline of the joint. The sleeper slabs, reinforcing bars, bond breaker, sealants shall not be quantified. When required, removing an existing terminal joint or sleeper slab shall not be quantified.

Jointed reinforced concrete pavement shall be quantified by the square yard.

Subgrade treatment, type IC shall be quantified in accordance with 207.

Retrofitted tie bars shall be quantified by the number of units installed.

The items list shall include the following:

Item No.	***Item Description***	***Unit Symbol***
503-05240	*D-1 Contraction Joint*	*LFT*
503-03489	*Retrofitted Tie Bars*	*EACH*
503-12476	*Jointed Reinforced Concrete Pavement, 13 in.*	*SYS*
503-12478	*Terminal Joint, Type PCCP*	*LFT*
503-05310	*Terminal Joint, Type CRCP*	*LFT*
503-12477	*Terminal Joint, Type HMA*	*LFT*
503-12479	*Expansion Joint with Load Transfer*	*LFT*
724-12103	*Pre-Compressed Foam Joint*	*LFT*
724-51927	*Structural Expansion Joint, M*	*LFT*

The following shall be considered incidental to these items:

Furnishing and placing all materials.

Dowels, dowel bar assemblies, expansion caps, joint filler, and joint sealants.

Sleeper slab, reinforcing bars, bond breaker, sealants, JRCP and CRCP transition panels, and removing an existing joint and sleeper slab.

Retrofitted tie bars or CRCP replacement used to repair damaged CRCP due to fault or negligence, remediation of random cracking, or the replacement of broken deformed bars.

SECTION 503, DELETE LINES 245 THROUGH 271.

METALLIZED STRUCTURAL STEEL

Description

This Work shall consist of applying a thermal sprayed, metallized, coating system to new structural steel and includes requirements for surface preparation, application of metallic coating by wire arc spray, sealer, and topcoat in accordance with SSPC-CS 23.00/AWS C2.23M/NACE No. 12, 105.03, the Design Documents, and as described herein.

Materials

Materials furnished shall be marked by the manufacturer with a batch number or marking to identify each batch to be used. The coating materials shall be in accordance with the specifications of the material manufacturer and the requirements of this specification. The Design-Build Contractor shall provide manufacturer's product data sheets and manufacturer's data with respect to procedures and material specifications for the coating wire, sealer, topcoat, or any other materials used in this process and manufacturer's material safety data sheets in accordance with 29 CFR 1910.1200 for all hazardous materials to be used at the job site prior to beginning any Work outlined in this specification.

Abrasive

Abrasives shall be hard and sharp to produce an angular surface profile on the steel substrate as described in the Surface Preparation section below. The blast cleaning abrasive shall be angular aluminum oxide, chilled iron grit, steel grit, or garnet. Steel grit hardness shall be Rockwell C of 51 or greater. Garnet abrasive shall conform to the requirements of SSPC-AB 1, Type 1, Class A, and shall be an appropriate grade to produce the specified blast profile. Aluminum oxide abrasives shall be commercially pure materials of the appropriate gradation to produce the specified blast profile.

Shot or other abrasives producing a round surface profile shall not be used. Coal slag shall not be used.

Mineral and slag abrasives

Mineral and slag abrasives and non-metallic abrasives shall be selected and evaluated per SSPC-AB 1. The results of the tests specified in section 4.1 thru 4.4 of SSPC-AB 1 and documented in accordance with section 5.4 of SSPC-AB 1 shall be provided on the Type A certification.

Recycled Abrasives

The abrasive shall be cleaned of paint, chips, rust, mill scale, and other foreign material after each use and before each reuse according to SSPC-AB 2. The Design-Build Contractor shall use equipment specifically designed for cleaning the abrasive. The abrasive shall be checked for oil content and water-soluble contamination according to SSPC-AB 2 at the frequency defined in the Surface Preparation section.

Metallic Abrasive

Recycled ferrous metallic abrasives shall be in accordance with the chemical and physical properties of SSPC-AB 2.

Non-metallic Abrasive

Recycled non-metallic abrasive shall meet all requirements of SSPC-AB 1 each time that it is placed in the blast pot.

Metallic Abrasive

New and remanufactured steel grit shall be selected and evaluated per

SSPC-AB 3. The results of the tests specified in Section 4.1.3 and section 5 of SSPC-AB 3 shall be provided on the Type A certification.

Metallizing Wire

The metallizing wire shall be in accordance with AWS C.25 or ASTM B833. The zinc wire shall be 99.99% Zinc - UNS (Z13005). The following shall be provided to IFA in the Type A certification for the metallizing wire:

- a manufacturer's certification that the raw material used to manufacture the wire meets the requirements of this provision
- a copy of all the chemical composition test results
- wire diameter measurements

The chemical composition analysis and wire diameter measurements shall be tested at the frequency defined in ASTM B833.

Sealers and Topcoats

The sealer shall be compatible with the topcoat and with the metallized substrate. The sealer and topcoat shall be provided by a single manufacturer. The cured film of the sealer and topcoat shall not contain any contaminants in concentrations which exceed the regulatory levels of 40 CFR 261.24, table 1, when tested in accordance with EPA TCLP, or contain any other material which will require characterization as a hazardous waste for the disposal of the dried film.

Sealer

The sealer shall be a low viscosity acrylic, epoxy, phenolic, silicone, or polyurethane, and shall be colored white. The sealer shall be formulated to penetrate and fill the pores in the metallized coating. The sealer shall have a minimum fineness of grind of 5 Hegman when determined in accordance with ASTM D1210. The information specified in section 10 of ASTM D1210 shall be provided on the Type A certification.

Topcoat

The topcoat shall be a two-component polyester or acrylic aliphatic polyurethane suitable for use as a topcoat over metallizing sealers. The general requirements as specified in 909.01 shall apply.

The mixed paint shall be in accordance with the following requirements.

Volatile organic compounds, ASTM D3960, Max.....336 g/L
Volume solids, ASTM D2697, Min.....60%
Set-to-touch, ASTM D1640, 5 mils wet film thickness, 25 ± 1°C,
50 ± 10% relative humidity, Min.....30 min
Total solids ASTM D2369, Min.....70%
Specular gloss, 60°, ASTM D 523, Max.....50
Viscosity, ASTM D562, Kreb Units, Max.....100
Contrast ratio, ASTM D2805, 5 ± 0.5 mils wet film thickness,
dried 24 h @ 25 ± 2°C on Leneta Form 2A or 2C, Min.....0.95
Dry hard, ASTM D1640, 5 mils wet film thickness, 25 ± 1°C,
50 ± 10% relative humidity, Max.....24 h

The color of the dried paint film shall match color number 26270, medium-gray, of Aerospace Material Specification Standard 595A.

Inaccessible Areas

Areas inaccessible to the metal spraying equipment as determined by IFA shall use the structural steel paint system in accordance with 619.09(a) with

the exception that the topcoat shall be in accordance with the Topcoat section of this provision.

Construction Requirements

The Design-Build Contractor performing the Work shall be SSPC-QP2 certified in accordance with 619.03. The area to be coated includes all steel surfaces including, but not limited to, inside box sections and bearings. If exposed, the top of the top flange of the girders or beams shall not be coated.

Reference Standards

Listed below are the industry standards which shall apply to this Work. At least one copy of each of these referenced standards, manufacturer's product data sheets for application of sealer, or sealer and topcoat and manufacturer's material safety data sheets for each hazardous material shall be provided to IFA.

ASTM

ASTM B833	Standard Specification for Zinc Wire for Thermal Spraying (Metallizing)
ASTM C633	Test Method for Adhesive/Cohesive Strength of Flame Sprayed Coatings
ASTM D1200	Standard Test Method for Viscosity by Ford Viscosity Cup
ASTM D3276	Standard Guide for Painting Inspectors (Metal Substrates)
ASTM D3925	Sampling Liquid Paints and Related Pigmented Coatings
ASTM D4285	Method for Indicating Oil or Water in Compressed Air
ASTM D4417	Test Method for Field Measurement of Surface Profile of Blasted Steel
ASTM D4541	Test Method for Pull-Off Strength of Coating Using Portable Adhesion Testers
ASTM E337	Standard Test Method for Measuring Humidity with a Psychrometer (the Measurement of Wet- and Dry-Bulb Temperatures)

AWS

AWS C2.16/C2.16M	Guide for Thermal-Spray Operator Qualification
ANSI/AWS C2.18-93	Guide for the Protection of Steel with Thermal Spray Coatings of Aluminum, Zinc, and their Alloys and Composites
AWS C2.23M/C2.23	Specification for the Application of Thermal Spray Coatings of Aluminum, Zinc, and their Alloys and Composites for the Corrosion Protection of Steel
AWS C.25/C2.25M	Specification for Thermal Spray Feedstock – Solid and Composite Wire and Ceramic Rods
AWS TS 1	Recommended Safety Practices for Thermal Spraying, 1973

2.3 ISO

ISO 8502-3	Preparation of Steel Substrates Before Application of Paint and Related Products – Tests for the Assessment of Surface Cleanliness – Part Assessment of Dust on Steel Surfaces Prepared for Painting (Pressure-Sensitive Tape Method)

NACE

NACE Std RP0287	Field Measurement of Surface Profile of Abrasive Blast Cleaned Steel Surfaces Using a Replica Tape

SSPC

SSPC Publication	The Inspection of Coatings and Linings: A Handbook of Basic Practice for Inspectors, Owners, and Specifiers
SSPC-AB 1	Mineral and Slag Abrasives
SSPC-AB 2	Cleanliness of Recycled Ferrous Metallic Abrasives
SSPC-AB 3	Newly Manufactured or Re-Manufactured Steel Abrasives
SSPC-PA 1	Shop, Field, and Maintenance Painting
SSPC-PA 2	Measurement of Dry Paint Thickness with Magnetic Gages
SSPC-PA Guide 3	A Guide to Safety in Paint Application
SSPC-QP 2	Standard Procedure for the Qualification of Painting Contractors (Field Removal of Hazardous Coatings from Complex Structures)
SSPC Guide 6	Guide for Containing Debris Generated During Paint Removal Operations
SSPC Guide 7	Guide for the Disposal of Lead-Containing Surface Preparation Debris
SSPC-SP COM	Surface Preparation Commentary
SSPC-SP 1	Solvent Cleaning
SSPC-SP 5/ NACE No. 1	White Metal Blast Cleaning
SSPC-SP 7	Brush-Off Blast Cleaning
SSPC-SP 10/ NACE No. 2	Near-White Blast Cleaning
SSPC-TR 3	Dehumidification and Temperature Control During Surface Preparation, Application, and Curing for Coatings/Linings of Steel Tanks, Vessels, and Other Enclosed Spaces
SSPC-VIS 1	Guide and Reference Photographs for Steel Surfaces Prepared by Dry Abrasive Blast Cleaning

Design-Build Contractor Submittals

Quality Control Plan, QCP

A QCP in accordance with Section 8.0 of Indiana Test Methods, ITM, 803 shall be submitted at the preconstruction conference. The following revisions are made to Section 8.5.2 of ITM 803:

(k) Metallizing application and recoatability;
(l) Seal coat application and recoatability;
(m) Topcoat application and cure;

In addition to the requirements above, the QCP shall also include quality control procedures for training and qualification requirements for blast cleaning, thermal spray operation, and quality control inspection. The thermal spray operation procedure shall also be in accordance with the arc spray equipment supplier's recommended procedures. The Design-Build Contractor shall also include the detailed procedures that will be used to meet the requirements of this specification for surface preparation, metallizing, applying the sealer and topcoat and quality control. The procedures shall detail application process, in-process quality control, and job control record to be used for the contract Work as well as the Design-Build Contractor's safety plan, inspection standards, inspector qualifications and tools, test procedures, pollution control system, safety plan, and inspection/test logs. The information shall also include the in-process quality control checkpoints and procedure for repairing the metallized coating.

No Work described in this specification may begin until written notice has been received that the QCP has been accepted by IFA.

Equipment List

The Design-Build Contractor shall provide a list to IFA of the equipment to be used for surface preparation, thermal spraying, sealing and topcoating, and in-process quality control.

Qualifications of Key Personnel and Thermal Spray Operators

The Design-Build Contractor shall submit evidence for each individual that is in direct charge of the thermal spray operators has successfully performed the surface preparation and application of metallized coatings on a minimum of three steel structures similar in scope and complexity to the project covered by this specification. The Design-Build Contractor shall list information by individual and include the following:

1. Name of individual and proposed position for this Work
2. Information about each previous assignment including:
    a. Position or responsibility
    b. Employer, if other than the current Design-Build Contractor
    c. Name and location of the facility owner
    d. Dates Work was carried out
    e. A brief description of structure
    f. Description of Work carried out on structure by the individual

Operator Testing

Each thermal spray operator shall be evaluated according to AWS C2.16/C2.16M:2017 (Sections JK-1, and AS-1), and pass the relevant tests prior to performing any thermal spray Work. The quality control inspector, as described in the Quality Control Inspector, QCI, section shall witness and certify in writing that each thermal spray operator has been tested and passed the relevant tests prior to performing any thermal spray Work. Unless waived

by IFA in writing, the operator tests shall be performed in the presence of IFA. At the discretion of IFA or QCI, any operator may be required to be retested at any time. The Design-Build Contractor shall provide all materials and equipment necessary for these tests at no additional cost to IFA.

Job Reference Standard, JRS

The Job Reference Standard, JRS, shall be representative of the whole job or major sections of the job. The JRS shall be prepared by the Design-Build Contractor performing the metallizing under the supervision of the quality control inspector and shall be the pass/fail sample for all Work including blast cleaning, metallizing, sealing, and topcoating.

The JRS is made with the actual field equipment, the process parameters and procedures for surface preparation; thermal spraying; sealing and topcoating and in process QC check points that will be used for the contracted Work. The JRS is made on a steel plate approximately 18 in. by 18 in. by 1/4 in. that has any sharp edges ground smooth. The JRS shall be blast cleaned, metallized, sealed and topcoated in accordance with this specification and AWS C2.23M/C2.23:2018. Two JRSs are required. One will remain the property of IFA. The other will become the property of INDOT Central Office – Office of Materials Management and is deliverable after acceptance by IFA.

The JRS shall be processed to illustrate the four coating steps: blast cleaning, metallizing, sealing and topcoating each in equal parts. The entire coupon is blast cleaned; one quarter remains blast cleaned only; one quarter is blast cleaned/metallized; one quarter is blast cleaned/ metallized/sealed; one quarter is blast cleaned/metallized/sealed/ topcoated.

The QCI shall make thickness and tensile bond measurements of the unsealed metallized coating as required in the Quality Control and Assurance section of this specification. This plate, when accepted by IFA, will be used as the visual standard to determine the acceptability of the thermal sprayed coating system.

Quality Control and Assurance

Quality Control Inspector, QCI

The Design-Build Contractor shall provide a quality control inspector, QCI. The QCI shall have documented training in the applicable test procedures of ASTM D3276 and SSPC-CS 23.00 and shall have a minimum of two years of verifiable experience in the inspection of metallizing bridges or similar structures. The QCI shall be employed by a company possessing a valid SSPC-QP 5 certification and a copy of the QP 5 certification shall be provided with the QCP. The QCI shall be either a NACE Certified Coatings Inspector or have an SSPC Protective Coating Specialist Certification. The QCI shall be available for inspection and not delay coating operations.

Compressed Air Quality

Blast cleaning and metallizing compressed air shall be tested daily in accordance with ASTM D4285, Standard Test Method for Indicating Oil or Water in Compressed Air. If the cloth or blotter retains oil or other contaminants, the QCI shall suspend abrasive blasting operations until retests verify that the problem is corrected.

Visual Inspection Requirements

Prior to sealing, the thermal sprayed coating shall have a uniform appearance, in accordance with the Spray Pattern specifications. If the coating is inferior to the JRS, the Design-Build Contractor shall correct the coating

by an acceptable repair method, as defined in the QCP.

Metal Thickness Conformance

The QCI shall inspect the Work for thickness conformance as necessary to ensure a uniform coating of the specified thickness. The QCI's thickness inspection procedure shall be as specified in the QCP.

Coating thickness shall be measured in accordance with SSPC-PA 2, using a mutually approved magnetic thickness and eddy current gauge with a digital readout and a probe. Such gauge shall be furnished to IFA but shall remain the property of the Design-Build Contractor. The gauge shall be:

PosiTector 6000 FRS3 with separate probe by DeFelsko Corporation.

The gauge shall be calibrated according to SSPC-PA 2.

The metallized coating thickness shall be measured according to AWS C2.23M/C2.23. One measurement line or spot measurement shall be taken every 100 to 200 sq ft of applied metallized coating. The Design-Build Contractor shall use a measurement line for flat surfaces. The Design-Build Contractor shall take the average value of five readings taken in a line at 1 in. intervals. The Design-Build Contractor shall use a measurement spot for complex geometries and geometry transitions. The spot measurement should be approximately 1 to 2 sq in. A gauge reading that is unusually high or low shall be discarded provided it is not consistently repeated. No single spot measurement shall be less than 80% of the specified minimum thickness or greater than 25 mils.

Thickness Less Than Contract Specification

If upon inspection and prior to sealer application, the metallized coating thickness is less than the contract requirement, the Design-Build Contractor shall apply, within the same work day, additional coating to meet the minimum thickness requirement.

Bend Test

The bend test is used as a qualitative test for proper surface preparation, equipment setup, and spray parameters. The bend test coupons shall be low carbon steel, 0.050 in. thick, 2 in. wide by 4 in. to 8 in. long. These coupons shall be blast cleaned and arc sprayed according to the requirements of this specification. The bend test is a pass/fail test. Once sprayed, the coupons shall be bent 180 degrees around a 1/2 in. diameter mandrel. The bend test passes if on the bend radius there is no cracking or spalling or only minor cracking that cannot be lifted from the substrate with a knife blade. The bend test fails if the coating cracks with lifting from the substrate. Every operator is subject to a complete re-test at the sole discretion of IFA.

Tensile Bond, Adhesion, and Measurement Schedule

The metallized coating's tensile bond strength shall be measured according to ASTM D4541 using a self-aligning adhesion tester and the results shall be documented. One portable tensile-bond measurement shall be made every 500 sq ft at a location randomly selected by IFA. The adhesion test shall be performed in the presence of IFA. The minimum tensile bond strength for the metallized zinc coating shall be 500 psi.

If the tensile bond is less than the contract specification, the degraded metallized coating shall be removed and reapplied. The tensile bond strength of the metallized coating shall be measured before the application of the sealer. Damage to the coated surface shall be repaired as directed in the specifications.

Sealer and Topcoat Conformance

Each coat of the sealer and topcoat shall be inspected for compliance with the manufacturer's requirements and the JRS. Acceptance of each coat is required prior to application of the next coat.

Repair of Defective Areas

All coated areas which have been rejected or damaged shall be repaired according to the Design-Build Contractor’s written repair procedure and shall meet the requirements of this specification. Any touch-up of rejected or damaged areas shall be completed by the Design-Build Contractor prior to final acceptance of the Work.

Pre-Construction Meeting

A pre-construction meeting shall be held prior to beginning any Work described in this specification. At a minimum, specific items addressed for metallizing shall include the Design-Build Contractor’s work plan, safety plan, inspection standards, inspector qualifications and tools, test procedures, pollution control system, safety plan, and inspection/test logs. All of the above-mentioned items shall also be included in the Design-Build Contractor’s QCP.

Equipment

Equipment and Techniques

The metal spraying equipment shall be of electric arc spray type. Flame spray is not permitted. The equipment shall be portable and capable of spraying 3/16 in. diameter maximum wire of zinc at a controllable rate. The wire shall be automatically dispensed to the spray gun. The spray gun shall be equipped with an arc shorting control device. The spray gun shall operate with oil-free and dry compressed air at 90 psi minimum. The air quality shall be in accordance with ASTM D4285. The spray equipment shall be capable of the following:

1) Spray for 3 minutes without sputtering or shutdown.
2) Produce test specimens that are acceptable for visual standards, the bend test, minimum three repetitions, and the tensile bond strength specified in the Visual Inspection Requirements, Bend Test, and Tensile Bond, Adhesion, and Measurement Schedule sections.
3) Start and stop spraying test consisting of eight "10-second spray, 5-second off" sequences without fusing or sputtering that could cause discontinuities or clumps of improperly melted sprayed metal on the work surface. This proof of equipment function shall be demonstrated by spraying the feedstock material specified in this specification.

The equipment shall be operated in accordance with the manufacturer's latest written instructions including, but not limited to, air pressure, gun to work piece standoff distance, and gun angle relative to the work surface.

Stages of Work

Thermal spray safety procedures in AWS TS 1 shall be followed when thermal spraying. The safety precautions recommended for thermal spray applicators are generally the same as those for welders. At a minimum, the applicator shall be concerned with eye, respiratory, and noise protection. In addition to following procedures described in the equipment manufacturer's operating manual, the precautions set forth in the spray material manufacturer's Material Safety Data Sheets shall be observed. The Design-Build Contractor shall provide a detailed safety program to IFA for acceptance prior to commencing Work. Any safety devices such as respirators deemed necessary by IFA shall be provided to IFA personnel. Additional safety information is available in AWS C2.16/C2.16M, Annex A. The Design-Build Contractor shall not use open combustion in the

enclosure.

Pollution, environmental, control and hazardous waste disposal shall be in accordance with 619.07, SSPC Guide 6 – Class 2A or better with method A, level 0 emission containment, and SSPC Guide 7, as well as all current regulations and laws as may apply. The Design-Build Contractor shall be responsible for all containment and disposal, and as such, bears the entire liability if the Indiana Department of Environmental Management, IDEM, Indiana Department of Natural Resources, IDNR, or any other jurisdictional agency finds pollution of the ground or water resulting from improper or poor containment and disposal practices.

When the QCI believes a section of Work is ready for acceptance, the QCI shall contact IFA and arrange for inspection of the Work to proceed to the next quality control checkpoint.

Precleaning

The structure shall be precleaned in accordance with 619.08(a) and (b) prior to any blast cleaning. The pressure washing shall remove only the contaminants, oils, greases, asphalt cement, diesel fuel deposits, and other petroleum products that interfere with coating adhesion or reduce coating life and not remove large amounts of paint.

Removal of Surface Defects

Surface irregularities interfering with the performance of the coating, such as sharp edges or carburized edges, shall be removed by grinding before any blast cleaning is performed.

Surface Preparation

The surface shall be abrasive blast cleaned to an SSPC-SP 5/NACE No. 1 white metal blast. The abrasive type, size, and hardness shall be selected to produce an angular surface profile of 2.5 to 5.0 mils. Shot blasting or peening is not acceptable. The abrasive shall be checked at the beginning of each shift and at 4 hour intervals for oil content and water-soluble contamination according to SSPC-AB 2.

The surface profile shall be measured in accordance with ASTM D4417, Method B or C. Surface profile readings shall be taken at least one per every 200 sq ft of blasted surface. Profile readings shall be taken at random locations including, but not limited to, flanges, webs, and cross frames.

The level of soluble salts on the blast cleaned steel substrate shall be measured in accordance with SSPC-TU 4, class A cell retrieval method. Soluble salt concentration levels shall be taken at least once per every 200 sq ft of blasted surface. The maximum allowable concentration will be 5 µg/cm2. For areas where the level of soluble salt concentration exceeds 5 µg/cm2, corrective action shall be proposed and submitted in writing. Corrective action measures shall not begin until written notice has been received that the corrective action is accepted by IFA.

The blast cleaned surface shall be inspected for surface profile, oil contamination, dust, blasting residue, and soluble salts, and accepted prior to the application of the metallized coating.

The Design-Build Contractor performing the metallizing Work shall also perform the abrasive blast operation in preparation for all metallized coatings. This responsibility shall not be passed to any other contractor or sub-contractor.

Waste Residue Sampling

After the first day of existing coating removal operations, the Design-Build Contractor, under the supervision of the QCI and in the presence of IFA, shall collect two 4 ounce random samples of blast/paint residue. One of these samples will be shipped for testing within 24 h in a manner described in the QCP. IFA will retain custody of each waste residue sample until it is shipped. The other waste residue sample will be retained by IFA. The samples shall be analyzed for full Toxicity Characteristic Leaching Procedure, TCLP. Waste residue shall be placed in an approved container. The containers shall be labeled and maintained to comply with 40 CFR 264. On bridges with hazardous-based coatings, the waste residue generated shall be treated at a facility rendering it to a non-hazardous state and disposed of in accordance with all applicable federal, state, and local regulations.

Holding Period and Flash Coat

The holding period, or time between the completion of the final anchor-tooth blasting, or final brush blasting, and completing the thermal spraying, shall be no greater than 6 h or before flash rusting occurs. In high-humidity and damp environments, shorter holding periods may be used. If rust bloom occurs, the Design-Build Contractor shall blast clean the surface to meet the requirements of the blast cleaning/surface finish requirements in the Waste Residue Sampling section of this specification. Rust bloom shall be the overriding consideration. In low-humidity environments or in enclosed spaces, it may be possible to retard the oxidation of the steel and hold the surface finish for more than six h using industrial dehumidification equipment. The Design-Build Contractor shall validate the temperature-humidity envelope for the work enclosure by spraying and analyzing bend coupons, by tensile-bond test, or both. For small and movable parts, if more than 15 minutes is expected to elapse between completion of surface preparation and the start of thermal spraying, or if the part is moved to another location, the prepared surface shall be protected from moisture, contamination, and finger/hand marks. Wrapping with clean print-free paper is normally adequate.

A flash coat of at least 2 mils of metallized coating shall be applied within 6 h of blasting or before flash rusting occurs, whichever is sooner. This single layer shall cover the peaks of the surface profile. This thin coating is intended to temporarily preserve the surface preparation. Before applying additional sprayed metal to the specified thickness, the first layer of coating shall be visually inspected to verify that the coating surface has not become contaminated. Any contamination between coats shall be removed in accordance with the Design-Build Contractor’s written procedures before any additional material is applied. The coating shall be sprayed to achieve the specified thickness as soon as possible and within 36 h after initial coating.

The flash coat, holding period, and final metallized coating will be acceptable provided the final coating meets the quality requirements of the Application of Metallized Coating section below.

Application of Metallized Coating

Steel Surface

The steel surface to be thermal sprayed shall be inspected and meet the requirements of the Waste Residue Sampling section prior to applying metallic coating.

Environmental Conditions

Metallizing shall not be performed when the steel surface temperature is

32°F or lower. The temperatures shall be monitored using a recording thermometer. The Design-Build Contractor may use a heated enclosure in accordance with SSPC-TR3/NACE -6A192 that uniformly and continuously heats the enclosure to maintain the minimum required steel surface temperature during all blasting, metallizing, sealing, and topcoating operations.

If the Design-Build Contractor elects to use industrial dehumidification equipment within an enclosure, the steel surface temperature shall be maintained at a temperature above 32°F and at least 15°F above the dew point and the maximum relative humidity within the enclosure shall not exceed 54%.

Metallizing shall not be applied to a surface which shows any sign of surface moisture. Metallizing or abrasive blasting shall not be performed when the steel temperature is less than 5°F above the dew point; if the steel surface is wet, damp, frosted, or ice-coated; during periods of rain, fog, or mist unless the above moisture criteria is met; or if the relative humidity is 85% or greater.

Surfaces to be metallized shall be dust free.

Spray Pattern

The metallized coating shall be applied in multiple, overlapping passes to ensure uniform coverage. Each layer or pass shall be applied at right angles to the previous layer. Spraying shall be performed in a block pattern, typically 2 ft square. The metallized coating shall not exceed 4 mils in thickness in a single layer.

Metallized Coating Thickness

The applied metallized coating thickness shall be between 10 mils and 12 mils.

Metallized Coating Properties

The coating shall be firmly adherent, free of spots, lumps, blisters, chips, or loosely adhering particles. The metallized coating shall be inspected and accepted according to all the requirements of this section before application of the sealer.

Application of Sealers and Topcoats

The sealer and topcoat shall be applied according to manufacturer's recommendations.

Sealer

Sealer shall be applied at a rate to obtain a nominal dry film thickness of 2.0 mils and shall be applied the same day as the metallized coating. If the sealer cannot be applied within 8 h of the completion of metallizing, the metallized coating shall be visually inspected to verify that the metallized coating has not been contaminated. The metallized coating shall be inspected to ensure that it is dust free by using the clear cellophane tape test method ISO 8502-3 before applying the sealer. The sealed metallized coating shall be inspected and accepted prior to application of the topcoat.

Topcoat

The topcoat shall be applied over the sealed metallized coating according to the manufacturer's recommended procedures for use of the product with a thermal sprayed coating system and SSPC-PA1. The topcoat shall be applied within one to five calendar days of application of the sealer, but in no instance shall the topcoat be applied before the sealer has cured according to temperature and moisture considerations as furnished by the sealer manufacturer. The topcoat

shall be applied at a rate to obtain a nominal dry film thickness of 4.0 mils or the dry film thickness as recommended by the manufacturer for use with a thermal sprayed coating system.

Stencil Information

After the topcoat has been approved, project identification information shall be painted with a stencil in 2 in. black capital letters onto the outside of both fascia beams or girders, at the right end of the beam or girder and near the end bent, which reads as follows:

_____
Bridge Number

_____
Contract Number

METALLIZED-Zn_____
Date

Final Acceptance

IFA will base final acceptance upon the results of the adhesion tests and dry film thickness measurements obtained during the Work. The Design-Build Contractor shall supply a report certified in writing by the QCI that documents and contains the raw field data demonstrating compliance to all aspects of this specification. IFA will review this report, progressive project documentation, and progressive field measurements to determine the final acceptability of the metallized coating.

Basis of Item

Pollution control, surface preparation, metallizing, seal coating, topcoating, and the structural steel paint system shall not be quantified.

The items list shall include the following:

Item No.	**Item Description**	**Unit Symbol**
619-03778	Metallizing.....	LS

The following shall be considered incidental to this item:

Maintaining traffic including furnishing, placing, moving, removal, remobilization/demobilizing of all temporary traffic control devices, and maintenance of all temporary traffic control devices.

Pollution control including devices and equipment required when cleaning and coating the structure, labor and material necessary to provide this item, including class 2A or better method A level 0 emission containment and disposal of spent materials.

Sampling, testing, grinding, repair of test areas, performing corrective actions.

QCI, tests, testing equipment, the JRS.

Removing the existing coating and obtaining the specified surface profile.

Using the structural steel paint system in areas deemed inaccessible to the metal spraying equipment.

SOUND BARRIER FIRE HYDRANT ACCESS DOOR FEATURES

Description

This Work shall consist of designing, furnishing and installing doors, handles, signs, and raised pavement markers (RPM), in accordance with 105.03.

Materials

The door shall have no locks. The handle shall be of the lever type. Signs and RPMs shall meet the requirements of 919.01 and 921.02, respectively. The door shall have a plunging type deadbolt that is controlled by the highway side lever handle with no key or locking mechanism. An exterior grade closing mechanism shall be included to cause the door to close automatically.

Construction Requirements

One handle shall be placed on the highway side of the fire hydrant access door to make it accessible from the highway side only. The right-of-way side shall not have a handle. The gap between the door's threshold and the bottom of the door shall have enough clearance to accommodate vegetation growth, snow and ice, or any other potential obstructions.

There shall be three signs for each door, mounted on the highway side. The first sign above the door frame shall state, "Fire Hydrant Access". The legend of the second sign, mounted just below the first sign, shall be the street name or highway number of the roadway the hydrant is accessed from. The third sign shall be positioned on the door itself and shall indicate the perpendicular distance in feet between the nearest point on the highway edge line to the fire hydrant.

A blue RPM shall be installed in the shoulder edge line at the nearest point perpendicular to the door.

Basis of Item

Access doors shall not be quantified. Furnishing access doors and all materials, equipment, and labor necessary to install access doors shall be considered incidental to the quantity of pay items in accordance with Recurring Special Provision 620-R-483.

PILE SLEEVES FOR MECHANICALLY STABILIZED EARTH RETAINING WALLS

Description

This Work shall consist of installing 24 in. diameter, Type 3 Pipe as pile sleeves through mechanically stabilized earth retaining wall fill in accordance with 105.03 and at the locations shown on the Design Documents.

Materials

Materials shall be in accordance with 701.02 and the following:

Ribbed Polyethylene Pipe.....907.20
Smooth Wall Polyethylene Pipe.....907.21
Profile Wall Polyvinyl Chloride Pipe.....907.22
Smooth Wall Polyvinyl Chloride Pipe.....907.23
Corrugated Aluminum Alloy Pipe.....908.04

The minimum thickness of 2 5/8 in. by 1/2 in. corrugated aluminum alloy pipe, lock seam, shall be 1/16 in. The minimum thickness of 2 5/8 in. by 1/2 in. corrugated aluminum alloy pipe, riveted, shall be 1/16 in. The dimension ratio for smooth wall polyethylene pipe shall be 26.

Bentonite Grout.....913.06

The piles shall be backfilled with uncrushed gravel, class D or higher, in accordance with 904 and the following gradation requirements.

Sieve Size	% Passing
1/2 in.	100
No. 50	0-5
No. 100	0-2

#11 or #12 gravel or pea gravel from an INDOT approved CAPP source will meet these gradation requirements.

Construction

The piles shall be driven and sleeved in accordance with the applicable portions of 701 prior to the construction of the mechanically stabilized earth retaining walls.

The pile sleeves shall extend from the base of the excavation for the mechanically stabilized earth retaining walls to 2 in. below the bottom of the bridge end bents. The pile sleeves shall be placed within 1 in. of the plan location and shall be sufficiently braced so that the sleeves shall remain within 2 in. of the plan location after placing the embankment material. The area between the pile and the pile sleeves shall be backfilled with uncrushed gravel. The top of the pile sleeves shall be sealed with bentonite grout to prevent concrete and structural backfill from entering the annular space between the pile and the pile sleeve. The bottom of the bridge bent shall be isolated from the top of the pile sleeve by expanded polystyrene.

Basis of Item

Pile sleeves shall be quantified per each.

The items list shall include the following:

Item No.	Item Description	Pay Unit Symbol
701-08253	Pile Sleeve.....	EACH

The following shall be considered incidental to this item:

Maintaining pile sleeve placement during construction of mechanically stabilized earth retaining walls, backfilling pile sleeves with uncrushed gravel, sealing and isolating the top of the pile sleeves and all miscellaneous materials, equipment, and other necessary incidentals.

PILE DRIVING VIBRATION MONITORING

Description

This Work shall consist of seismograph monitoring during pile driving of all piles at all substructures in accordance with 105.03, the Design Documents, and as described herein.

Definitions

Geophone or vibration transducer: A sensor used to monitor ground vibrations, particle velocity components.

Peak particle velocity: The maximum of any one of the three mutually perpendicular ground motion velocity components of a vibration measured in directions vertical, radial, and perpendicular to the vibration source in inches per second, in./sec.

Seismograph: An instrument used to record the magnitude and frequency of ground vibrations sensed by a geophone.

Quality Assurance

The Design-Build Contractor shall engage the service of a qualified, independent Registered Professional Engineer in the State of Indiana, acceptable to IFA to conduct the vibration monitoring.

Prior to starting pile driving, the Design-Build Contractor, IFA, and the Registered Professional Engineer shall jointly conduct a pre-construction survey of the existing site.

Monitoring shall be performed by personnel trained in the use of a seismograph, records shall be analyzed and results reported by personnel familiar with analyzing and reporting the frequency content of a seismograph record.

Prior to pile driving, the data collector shall obtain baseline readings of ambient vibrations. The vibration during the pile driving shall be measured with the seismograph sensor placed at a location closest to the piles being driven. The vibration during pile driving shall be limited to a peak particle velocity of not more than 0.5 in./sec. Vibration shall be monitored during driving of all piles at all substructures and throughout all pile driving if peak particle velocity measurements exceed 0.3 in./sec.

The Design-Build Contractor shall be responsible for all damages resulting from the pile driving operations and shall take whatever measures are necessary to maintain peak particle velocity within the specified limits.

Basis of Item

Vibration monitoring shall be quantified as a lump sum.

The items list shall include the following:

Item No.	Item Description	Unit Symbol
701-05787	Instrumentation, Integrity Testing and Data Collection, Vibration Monitoring	LS

ALTERNATE CLASS C CONCRETE

SECTION 702, BEGIN LINE 11, DELETE AND INSERT AS FOLLOWS:

Concrete in superstructure, integral *and semi-integral* bent~~s~~ *diaphragms*, *approach slabs*, and railings shall be *alternate* class C. Concrete in bent caps, unless poured integrally with the superstructure; pier caps; abutment caps; pier stems; abutment walls; mudwalls; columns; crashwalls; collision walls; and wingwalls, unless poured with integral end bents, shall be class A. Concrete in footings shall be class B.

SECTION 702, LINE 37, INSERT AS FOLLOWS:

Silica Fume 901.04

SECTION 709, BEGIN LINE 80, DELETE AND INSERT AS FOLLOWS:

In lieu of concrete surface sealing for concrete barrier wall, bridge decks, reinforced concrete bridge approaches, ~~pier and bent caps,~~ bridge railing, and bridge railing transitions, an alternate concrete mix design ~~may~~ *shall* be used. *In lieu of concrete surface sealing for pier and bent caps an alternate concrete mix design may be used.*

The concrete mix design shall be as specified, except either 3% silica fume by weight of cementitious material shall be added to the mix design or 30% ground granulated blast furnace slag substitution based on the required cement content shall be incorporated into the mix. The substitution of ground granulated blast furnace slag shall be in accordance with 702.05. A water-reducing admixture or a water-reducing retarding admixture shall be used in the mix design, and the amount of water added shall be adjusted accordingly. The use of these admixtures shall be in accordance with
702.05.

~~When one of these alternate concrete mix designs are used in lieu of a concrete surface sealer, a~~ *A* finish in accordance with 702.21 ~~will~~ *shall* be required.

STRUCTURAL MASS POUR CONCRETE

Description

This Work shall consist of furnishing and placing a concrete structural element, of large cross section, that is free of cracks resulting from thermal gradients created by the heat of hydration during the curing process in accordance with 105.03 and as described herein.

This shall be accomplished through appropriate mix design and management of the concrete temperature and temperature differential. Structural mass pour concrete is defined as any Class A or Class C concrete placements with a least dimension greater than 4 ft and as shown on the Design Documents. This specification shall not apply to concrete placed in drilled shafts.

Materials

The mass pour concrete structural element shall utilize Class A or Class C concrete in accordance with 702.02 and 702.03, except as follows:

1. The coarse aggregate shall be size No. 5 or No. 8. An AASHTO M 43 size coarse aggregate meeting the gradation requirements of #467, #4 or #357 may be used if approved by IFA. In addition, the minimum clearance between reinforcing bars shall be at least 1.5 times the nominal maximum size of the coarse aggregate.

2. The maximum slag cement substitution is 60% based on the required cement content. Increased slag cement percentage may be considered but is subject to IFA review and approval.

3. Cooling of materials prior to addition to the mixer will be allowed to reduce the temperature of the concrete in its plastic state. The normal practices as identified in ACI 207.4R – 05 are considered acceptable for pre-cooling materials prior to and at the time of concrete batching.

4. Other acceptable methods that are developed by the Design-Build Contractor and approved by IFA in writing may be used.

Thermal Control

The maximum concrete temperature at time of placement shall not exceed 70°F and shall not be less than 40°F. The maximum concrete temperature during the period of heat dissipation shall not exceed 150°F. The temperature differential between the interior of the section and the outside surface of the section shall not exceed the limits specified in the following table:

Hours After Placement Hours	Maximum Temperature Differential °F
0-24	20
24-48	30
48-72	40
>72	50

Thermal control of each placement shall be maintained until the temperature of the interior is within 50°F of the average outside air temperature. The average outside air temperature shall be determined by

averaging the daily high and low temperature of the preceding seven calendar days.

Thermal Control Plan

A thermal control plan shall be written to describe the procedures used during the period of heat dissipation following concrete placement. The thermal control plan shall describe the procedures used to ensure that the maximum temperature and temperature differential between the interior of the section and the outside surface of the section do not exceed the restrictions specified. The thermal control plan shall be submitted to IFA at least 30 days before the first intended structural mass pour concrete placement. Compliance with this specification may result in long cooling times. Therefore, consideration shall be given to options that control heat of hydration which are compatible with the desired construction schedule and erection procedures.

Mass pour concrete shall not be placed until the thermal control plan has been approved by IFA, and the equipment and materials necessary to facilitate the plan are on site and ready for use.

For mass pour concrete placements, the thermal control plan shall be developed by a Registered Professional Engineer in the State of Indiana who is competent in the modeling, design, and temperature control of mass pour concrete in structural elements. The Registered Professional Engineer shall be known as the Thermal Control Engineer, TCE. The TCE shall be knowledgeable of Section 207.02R-95 of the ACI Manual of Concrete Practice entitled "Effect of Restraint, Volume Change and Reinforcement on Cracking of Mass Concrete". The TCE shall follow the guidelines outlined in Section 207.4R-05 of the ACI Manual of Concrete Practice entitled "Cooling and Insulating Systems for Mass Concrete" to formulate, implement, administer, and monitor a thermal control plan.

The TCE shall have administered at least three mass pour concrete projects of similar dimension and thermal control requirements to those shown on the Design Documents and the projects shall have been completed within the past three years. The TCE shall be responsible for making adjustments as necessary to ensure compliance with these specifications.

The thermal control plan shall include, but is not limited to, the following:

1. The mix design for the mass pour concrete.

2. The adiabatic heat generation for the mix design being used. This shall be determined by laboratory testing in accordance with ASTM C186.

3. Identification of any modeling software used to predict maximum temperature and temperature differential resulting from the heat of hydration generated in mass pour concrete.

4. Methods to monitor and control the maximum temperature and the temperature differential temperature within the concrete to prevent thermal cracking. Methods of curing and a remedial action plan shall be defined.

5. List at least three mass pour concrete projects of similar dimension and thermal control requirements to those shown on the Design Documents. The projects shall have been administered by the TCE and shall have been completed within the past three years. The list of

projects shall include the names and phone numbers of the owner's representative who can verify the TCE's participation on those projects.

6. Qualifications of all technicians employed to inspect or monitor mass pour concrete placements.

7. If necessary, design of a post-cooling system consisting of non-corrosive piping to be embedded in the structural mass. Details of the grouting operations shall be provided. The grout shall be a pre-packaged material and shall be identified on the Design Documents.

8. Provide information on the temperature sensing and recording equipment to be used and the details of the installation and location of the temperature probes for each planned mass pour concrete placement.

9. Details of mass pour concrete placement to ensure prevention of cold joints during placement.

Temperature Sensing and Recording

For each placement of structural mass pour concrete, two temperature sensors shall be installed at each of the following five locations, for a total of 10 temperature sensors. Additional sensors may be installed at other locations within the concrete placement, as required and detailed in the thermal control plan.

- Center of the placement.
- Midpoint of the side which is the shortest distance from the center, having 2 to 3 in. of cover.
- Midpoint of the top surface, having 2 to 3 in. of cover.
- Corner of the placement which is furthest distance from the center, having 2 to 3 in. of cover.
- Air temperature.

The purpose of the two sensors at each location is to provide a primary sensor and secondary back up sensor. A back-up readout device for the sensors shall also be provided. The back-up system is intended to be used to complete the monitoring of a placement should the primary system fail.

Temperatures shall be electronically recorded automatically by an approved recorder furnished by the Design-Build Contractor. The equipment shall be capable of continuously recording at least one reading every 30 minutes for the duration of the mass concrete temperature monitoring period. The sensors and recorder shall be accurate to within ± 2°F in the temperature range of the 32°F to 212°F.

Production

The TCE, or qualified technician employed by the TCE, shall personally inspect and approve the installation of monitoring devices and verify that the process for recording temperature data is effective for the first placement of each size and type of concrete component. Recording of temperature data shall begin when the concrete placement is complete and shall continue past the maximum temperature differential, not maximum temperature, and a decreasing temperature differential is confirmed for compliance with these

specifications. For placements other than the first, a qualified technician may inspect and monitor the temperature sensing and recording system for the purpose of:

1. Reviewing temperature data.

2. Being in contact with the TCE during mass pour concrete placement should adjustments be made as a result of the temperature differential being exceeded.

3. Implement adjustments to temperature control measure for mass pour concrete as directed by the TCE.

4. If conditions change, such as a drop in the ambient temperature or a change in insulation resulting in an increase in the temperature differential, the recording of the temperature data shall be resumed. A copy of all recorded temperature data shall be furnished to IFA as they are determined.

The TCE or qualified technician shall report temperature data at intervals not exceeding four hours. The TCE shall furnish IFA a final report within three days of completing monitoring of each structural element. The report shall include all recorded temperature data and pertinent information and actions taken to implement the thermal control plan.

If the maximum concrete temperature or differential temperature within the structural mass pour concrete placement exceeds the specified limits, immediate corrective action as directed by the Design-Build Contractor or the TCE shall be taken. Future placement of structural mass pour concrete shall be suspended and a revised thermal control plan shall be submitted to IFA for approval. Further placement of mass pour concrete shall not occur without written approval from IFA.

Acceptance

Application of loads and acceptance of mass pour concrete shall be in accordance with 702.24, except that sulfate resistant concrete will be tested for compliance based on flexural strength of beam specimens. ITM 402 may be used as an alternate method to determine flexural strength.

If the maximum temperature of the mass pour concrete after placement exceeds 150°F, but is less than 160°F, the concrete will be accepted if no cracking or other unacceptable defects are identified. If cracking or unacceptable defects are identified, the mass pour concrete will be adjudicated as a failed material in accordance with 105.03. If the maximum concrete temperature equals or exceeds 160°F, the mass pour concrete will be adjudicated as a failed material in accordance with 105.03.

If a temperature differential between the internal center of concrete placement and the concrete 2 to 3 in. from the exposed surface exceeds the specified amount, the mass pour concrete will be accepted if no cracking or other unacceptable defects are identified. If cracking or unacceptable defects are identified, the mass pour concrete will be adjudicated as a failed material in accordance with 105.03.

The mass pour concrete shall be inspected for cracks after the temperature monitoring is discontinued. The Design-Build Contractor shall provide access for inspection. The Design-Build Contractor shall be responsible for repair of cracks identified. A clear concrete sealer shall be applied in accordance with 709 to a crack that is less than 0.007 in. in width. A crack that is 0.007

in. or greater in width shall be repaired by epoxy injection in accordance with 727.

Basis of Item

Class A and Class C structural mass pour concrete shall be quantified by the cubic yard in accordance with the neat lines and quantities shown on the Design Documents, or as directed by IFA. No deductions shall be made for the volume of embedded reinforcement, encased piles, temperature sensors or mechanical cooling ducts.

The items list shall include the following:

Item No.	Item Description	Unit Symbol
702-51005	Concrete, A, Substructure, Modified.....	CYS
702-92857	Concrete, C, Substructure, Modified.....	CYS

The following shall be considered incidental to this item:

Material, forms, falsework, falsework piling, placement, curing, finishing and necessary incidentals.

Thermal control plan; temperature sensing and recording of structural mass pour concrete; monitoring and implementation of thermal control; installation, operation and grouting of post-cooling system; and any incidentals.

FORMLINER FOR PIERS AND MSE WALLS

Description

This Work shall consist of constructing simulated natural split-face block masonry textured surfaces on all areas so designated on the Design Documents for barrier, piers, and MSE walls, in accordance with 105.03 and 702.

Formed Textured Surfaces

Where formliner is designated, concrete surfaces shall be formed using a form lining system made of high-strength urethane elastomer materials capable of withstanding anticipated concrete pour pressures without leakage or causing physical defects. Formliners shall attach easily to forms and be removable without causing concrete surface damage. Provide drafts to all patterns to ensure clean release of formliners. The formliners shall be designed to form surfaces conforming to the design intent including the shape, lines and dimensions described herein and on the Design Documents.

Formliners shall produce a highly realistic finish. Textured surfaces shall exhibit rough and natural finishes. Simulated stones surfaces should exhibit the rough, natural, split finish of real stone laid in place and have a maximum surface relief of no more than 3/4 in. and an average relief of 3/8 in. Simulated textured surfaces having a smooth, slick or shiny surface will be rejected. Recesses and texture shall be formed with crisp, sharp edges and a natural relief to the shape and dimensions described herein and shown on the approved Working Drawings.

Formliner for the "I-69 Smooth Geometric" MSE wall panels shall be as follows based on an assumed panel size, exposed panel dimensions, of 10 ft long by 5 ft high:

- Stacked, smooth stone block pattern
- Thirteen rows high
- See Attachment 6-1 (Conceptual Aesthetics and Landscape Plans) for smooth stone block sizes.
- See Attachment 6-1 (Conceptual Aesthetics and Landscape Plans) for stone block relief above the nominal panel thickness. Where adjacent surfaces have the same relief, insert a 1/4 in. by 1/4 in. reveal to continue the horizontal pattern.
- Panels shall be sized to allow for full size blocks without simulated grout lines around the perimeter of the panel.

Formliner for the "I-69 Concise Hex" MSE wall corner pilaster shall be as follows:

- One vertical centered recess in each face.
- Recess shall be a v-shaped cut 8 in. wide by 3 in. deep.

Formliner for the "I-69 Concise Hex" pier shall be as follows:

- One vertical recess in the front and back face of the column.
- Recess shall be a v-shaped cut 1 ft-2 in. wide by 4 in. deep.
- V-shaped recess shall start at the bottom of the pier cap and proceed down to the top of crashwall or footing.

Formliner for the "I-465 Split-Face Geometric" MSE wall panels shall be as follows based on an assumed panel size, exposed panel dimensions, of 10 ft long by 5 ft high:

- Stacked split-face stone pattern

- See Attachment 6-1 (Conceptual Aesthetics and Landscape Plans) for split-face stone block sizes.
- See Attachment 6-1 (Conceptual Aesthetics and Landscape Plans) for split-face stone block relief above the nominal panel thickness.
- Panels shall be sized to allow for full size blocks without simulated grout lines around the perimeter of the panel.

Formliner for the "I-465" MSE wall corner pilaster shall be as follows:

- Stacked, smooth stone block pattern
- Simulated grout lines shall be 1 in. wide by 1 in. deep between blocks.
- Smooth stone blocks shall be 4 ft wide by 1 ft-6 in. high. Full size blocks shall start at the bottom of the coping and proceed as full-sized blocks to 1 ft below finished grade.

Formliner for the "I-465" piers shall be as follows:

- Stacked, smooth stone block pattern
- Simulated grout lines shall be 1 in. wide by 1 in. deep between blocks.
- Smooth stone blocks shall be 1 ft 5 in. high. Full size blocks shall start at the bottom of the pier cap and proceed down as full-sized blocks with the bottom most block just above the crashwall or footing reduced in height as necessary to fit.
- Smooth stone blocks shall wrap the full perimeter of the pier column
- Formliner shall be used on all surfaces of the pier columns.

If snap ties are to be used, the ties shall be made of non-corrosive materials when the portion permanently embedded in the concrete is less than 1 1/2 in. from the finished surface.

Form release agents shall be fully compatible with the formliner material and the modified surface seal finish to be applied to the textured surfaces.

Submittals

Within 60 calendar days of execution and approval of the commencement of construction, the Design-Build Contractor shall submit the following to IFA for approval:

1. Product data including the manufacturer's technical information and use instructions for formliner placement and release.

2. Actual samples of formliners to be used.

3. Qualification data for firms and the person specified below under Quality Assurance to demonstrate their capabilities and experience. Design-Build Contractor shall include a list of completed projects with project names, addresses, names of architects, engineers and owners, plus any other pertinent information.

4. Working Drawings indicating formliner layout and termination details. Design-Build Contractor shall indicate backup, rustication, reveal, and chamfer strip locations. Include jointing, form tie location, pattern placement, pattern match details, and end, edge and other special conditions. Design-Build

Contractor shall indicate tolerances and procedure of installation and separation.

After IFA approves the Working Drawings and prior to commencement of production or construction of the piers and MSE wall panels, the Design-Build Contractor shall submit the following to IFA for approval:

1. Test Panel Mock-ups and Concrete Test Panels as specified below under Quality Assurance.

Quality Assurance

1. Manufacturer's Qualifications: The formliner manufacturer shall have five years minimum experience making liners used to create formed concrete surfaces matching natural stone shapes and textures.

2. Installer Qualifications: The formliner installer shall have had a minimum of five consecutive years of experience in textured formed concrete construction.

3. Test Panel Mock-ups and Test Panels, Split-Face block Patterns Only: Design-Build Contractor shall construct test panel mock-ups of textured and formed surfaces to be used for the pier columns and MSE wall panels for quality control comparison of surface texture and pattern characteristics between the approved sample mock-ups and the actual Work as it is installed. The test panel mock-ups shall be constructed using urethane foam or other suitable lightweight material to produce a surface that simulates that produced when casting concrete. The test panel mock-ups shall be a minimum of 3 in. thick, 5 ft wide, and 5 ft high. The test panel mock-ups shall be provided near the Project Site or field office and IFA shall be notified at least one week in advance.

Upon approval of the test panel mock-up, three concrete test panels shall also be constructed and shall be provided near the Project Site or field office. At a minimum, each concrete test panel for the pier column shall be 2.5 ft thick by 5 ft tall by 10 ft long providing a half-section of the column including the recess on the sides. At a minimum, each concrete test panel for the MSE walls shall be 6 in. thick by 5 ft tall by 10 ft long. Materials used in constructing the concrete test panels shall comply with the applicable requirements of 702 for formwork and concrete. Concrete mix for the concrete test panels shall be Class A. The formliner used for the concrete test panels shall produce the same pattern that is intended for use on the structures. Surface seal shall also be applied to the test panels. Additional concrete test panels will be required if results of the initial test panel do not meet the requirements of these special provisions. IFA shall be notified at least one week in advance.

Following completion of the structure, the Design-Build Contractor shall remove and dispose of the test panels in accordance with 202.

Test panels shall be considered incidental to the Work.

Construction Requirements

Design-Build Contractor shall match pattern features at formliner joints to make the formed concrete surface appear uniform and continuous without grout leakage at the joints. When concrete vertical and horizontal construction joints

are required, the Design-Build Contractor shall place formliner joints in the valley of the grooves, or as approved by IFA. Following removal of forms, the Design-Build Contractor shall finish improperly formed joints to achieve a smooth and uniform cast concrete surface. No visible vertical and horizontal seams or conspicuous form marks created by butt-joining formliners will be allowed. Where it is not possible to locate a vertical or horizontal groove at a construction joint, the concrete surface shall be finished to reduce visibility of the construction joints.

Formwork shall be stripped in accordance with the formliner manufacturer's recommendations to avoid concrete surface deterioration or weakness planes in the substrate. Form tie holes shall be finished in accordance with 702 using approved patching materials.

Surfaces of formliners to be re-used shall be cleaned and repaired. Split, frayed, delaminated or otherwise damaged formliner material will not be acceptable for exposed surfaces. Formliners shall be cleaned and free of concrete buildup prior to each pour. Design-Build Contractor shall not use "patched" forms for exposed concrete surfaces unless approved by IFA.

Basis of Item

Formliner for piers and MSE wall panels shall not be quantified. Formliner for piers and MSE wall panels shall be considered incidental and shall be included in the quantity of Concrete, A, Substructure, and Face Panels, Concrete in accordance with 702.28 and 731.13.

EMBEDDED GALVANIC ANODES

Description

This Work shall consist of furnishing and placing discrete embedded galvanic anodes in accordance with 105.03.

Materials

The galvanic anodes shall be supplied by one of the following:

BASF Construction Chemicals, LLC
889 Valley Park Drive
Shakopee, MN 55379
(800) 443-9517

The Euclid Chemical Company
19218 Redwood Road
Cleveland, OH 44110
(800) 321-7628

Sika Corporation
201 Polito Avenue
Lyndhurst, NJ 07071
(800) 933-7452

Vector Corrosion Technologies, Inc.
8413 Laurel Fair Circle, Ste 200A
Tampa, FL 33610
(813) 830-7566

The galvanic anodes shall conform to the requirements of ASTM B418, Type II and shall contain no less than 100 grams of zinc per anode. A Type C Certification in accordance with 916, including the vendor name, product names, and a statement certifying the compatibility of the galvanic anode and the patching material, shall be furnished for the galvanic anodes.

Construction Requirements

The galvanic anode manufacturer shall prepare and submit Working Drawings in accordance with 105.02. The Working Drawing shall include calculations for the manufacturer's recommended spacing, calculations showing the provided zinc content meets or exceeds the minimum required zinc content, manufacturer's installation instructions and details, and certification by the manufacturer that the proposed patching materials are compatible with the galvanic anodes.

A qualified representative of the galvanic anode manufacturer shall be present at the beginning of the Work to ensure adequate workmanship and inspection of the anode installation.

Galvanic anodes shall be kept dry and stored in their original unopened box at temperatures less than 100 °F.

Discrete galvanic anodes shall be installed within partial and full depth cavities, new portions of bridge deck, and along the perimeter of the cavity interface with existing concrete as shown on the Design Documents. The spacing of the anodes shall be as per the manufacturer's recommendations, but shall not exceed 28 in. The minimum required zinc content in each direction shall be calculated as follows:

$$\text{Zinc} = 1.7 \times \gamma_{Steel} + 4.0$$

where:

Zinc = minimum required zinc content, grams/inch

γ_{Steel} = steel density ratio defined as the ratio of the total surface area of all of the reinforcing bars within or below the patch to the surface area of the patch that could be exposed to chlorides. In locations where two or more layers of reinforcing bars have more than 12 in. of space between them, and the lower layer of reinforcing is located below the depth of the patch, only the reinforcing bar layer closest to the surface is required to be included in the calculation. The surface area of each bar = 3.14 x bar diameter x length of bar within the patch. At locations where the existing concrete is being widened, the steel density ratio shall be calculated based on a one-foot tributary width of the existing concrete section.

The anodes shall be placed at the required spacing in each direction for partial depth patches and at the required spacing around the perimeter of full depth patches. At locations where existing concrete structures are being widened, the anodes shall be placed at the required spacing along the interface of the existing and new concrete. Anodes shall be attached to the layer of reinforcing steel closest to the surface that could be exposed to chlorides.

Existing concrete shall be removed in accordance with the applicable sections of 202, 710, and 722. Any reinforcement that has lost 50% or more of its original cross-sectional area or any reinforcement that has been damaged during concrete removal shall be removed and replaced in accordance with the applicable sections of 202, 710, and 722. After all loose or unsound concrete has been removed in the areas to be repaired and as shown on the Design Documents and as directed by IFA, the continuity of the existing reinforcing bars within the repair area shall be tested. The DC resistivity between all reinforcing bars, as measured with a multi-meter, shall be less than 1.0 ohms. Continuity between bars shall be restored at locations where the resistivity is greater than 1.0 ohms by use of uncoated tie wires.

The discrete galvanic anodes shall be positioned no further than 4 in. and no less than 1 in. from the edge of the patch. The surface of the reinforcing bars in the areas to be connected to the anodes shall be prepared by removing all concrete and cleaning to a near-white surface condition. The anodes shall be firmly and securely attached to the reinforcing bars by tightly wrapping the wire ties around the exposed uncoated and cleaned reinforcing bars at least one full turn in opposite directions, and in accordance with the manufacturer's recommendations. Attachment shall be made immediately after reinforcing bar surface preparation, and the anodes should be positioned in the plane of the reinforcing with a minimum cover of 1 in. to the surface of the patch. Anodes shall have a minimum of 1 in. clearance to the bottom of the patch and shall allow the patching material to completely encase the anode. Where sufficient space is available, the anode may be positioned below the reinforcing bars. The DC resistivity between the anodes and the reinforcing bars, as measured with a multi-meter, shall be less than 1.0 ohms.

The anodes shall be pre-wet to a saturated surface dry condition immediately prior to installing the patching material in order to minimize moisture loss of the anode mortar and to improve adhesion.

Basis of Item

Embedded galvanic anodes shall be quantified per each, complete in place.

The items list shall include the following:

Item No.	**Item Description**	**Unit Symbol**
703-08247	Embedded Galvanic Anode.....	EACH

The cost material, labor, equipment, incidental work to establish continuity of reinforcement, shall be included in the cost of embedded galvanic anode.

The cost of removing portions of existing concrete structures shall be included in present structure remove portion pay item.

The cost of material, labor, equipment, and incidental work for patching existing concrete piers, end bents, abutments, wingwalls, retaining walls, concrete structure surfaces other than bridge decks, and patching concrete drainage structures shall be included in patching concrete structures pay item.

The cost of material, labor, equipment, and incidental work for patching existing bridge decks shall be included in the bride deck overlay or bridge deck patching pay item.

STAINLESS STEEL REINFORCING BARS

Description

This Work shall consist of furnishing all labor, materials, equipment, and incidentals necessary for placing stainless steel reinforcing bars, lap splices, mechanical connectors, chairs and supports, inserts, dowels, and tie wire in accordance with 105.03, 703, the Design Documents, and as specified herein.

Materials

Materials for this Work shall be in accordance with the following:

Reinforcing bars shall be deformed and shall meet the requirements of ASTM A955 except for Section 6, Chemical Composition and Section 15, Finish. Acceptable alloys are listed by Uniform Numbering System for Metals and Alloys (UNS) designation in Table 1. Surfaces shall be finished in accordance with Table 1 and the requirements of ASTM A380.

Table 1
Stainless Steel Alloys for Reinforcing Bars and Dowels

UNS Designation	S31653		S31803		S20910		S24100		S32304	
AISI Type	316LN		2205		XM-19		XM-28		2304	
Common or Trade Name	Type 316 Low Carbon Nitrogen Added		Type 2205 Duplex		Nitronic 50		Nitronic 32 Enduramet 32 18-Cr-2Ni-12Mn		Type 2304 Duplex SAF 2304 Fe-23Cr-4Ni-0.1N	
Required Condition	As rolled		As rolled		As rolled		As rolled		As rolled	
Required Finish	Descaled and white pickled		Descaled and white pickled		Descaled and white pickled		Descaled and white pickled		Descaled and white pickled	
Grade	60	75	60	75	60	75	60	75	60	75
Minimum Tensile Strength (ksi)	90	95	90	95	90	95	90	95	90	95
Minimum Yield Strength (ksi)	60	75	60	75	60	75	60	75	60	75
Minimum Elongation in 2 inches (%)	25	20	25	20	25	20	25	20	25	20

Mechanical connectors for reinforcing bars are defined as systems which connect the bars without raising their temperature above 1,300°F.

Mechanical connectors shall be provided which develop at least 150% of the specified minimum ultimate strength of the reinforcing bars in compression and in tension. Where bars of different sizes or strengths are connected, the

Design-Build Contractor shall match the strength of the smaller or weaker bar.

Spliced reinforcing bars that slip more than 0.040 in. when measured between guage points clear of the splice sleeve shall not be allowed when the reinforcing bars are loaded in tension to 67% of the specified minimum yield strength of the reinforcing bar.

The splice sleeve and connection hardware shall be fabricated from an alloy listed in Table 1. The surface shall be finished in accordance with Table 1 and the requirements of ASTM A380.

Chairs and continuous supports shall be fabricated from an alloy listed in Table 1. The surface shall be finished in accordance with Table 1 and the requirements of ASTM A380.

Concrete inserts shall be fabricated from an alloy listed in Table 1. The surface shall be finished in accordance with Table 1 and the requirements of ASTM A380. Concrete inserts with closed-back ferrule threaded to receive UNC threaded bolts or rods shall be provided in the size shown. Concrete inserts shall be provided with the following minimum lengths and safe working loads:

Bolt or Rod Diameter (Inches)	**Insert Length (Inches)**	**Safe Working Load in Shear or Tension (Pounds)**
3/4	4 1/2	4,000
1	5 1/2	6,000
1 1/4	7 1/2	10,000
1 1/2	9 1/2	16,000

Dowels shall be provided meeting the requirements of ASTM A955 except for Section 6, Chemical Composition and Section 15, Finish. Acceptable alloys are listed by Uniform Numbering System for Metals and Alloys, UNS, designation in Table 1. The surface shall be finished in accordance with Table 1 and the requirements of ASTM A380.

Tie wire shall be 16-gauge and shall meet the requirements of ASTM A555 and shall be fabricated from an alloy listed in Table 1, in dead soft annealed condition and passivated according to ASTM A380.

Where stainless steel inserts are specified, inserts shall be provided that meet the requirements as described herein.

For stainless steel reinforcing bars, splice samples shall be provided that meet the requirements as described herein.

Tie wires shall be provided meeting the requirements as described herein for blocks supporting stainless steel reinforcing bars.

Stainless steel reinforcing bars shall only be tied with stainless steel tie wire meeting the requirements as described herein.

Stainless steel reinforcing bars shall be supported with stainless steel metal chairs and continuous supports meeting the requirements as described herein.

Stainless steel reinforcing bars shall not be tied to plain or epoxy-coated steel reinforcing bars. Direct contact is not acceptable. When stainless steel reinforcing bars or dowels must be near plain or epoxy-coated reinforcing

bars, nylon or polyethylene spacers shall be used to maintain a minimum 1 in. clearance between the two metals and bind them with nylon cable ties. Where insufficient space exists to maintain this minimum, either bar may be sleeved with a continuous polyethylene or nylon tube extending at least 1 in. in each direction past the point of closest contact between the two dissimilar bars.

Construction

Construction for this Work shall meet the following requirements:

Placing and Fastening

Prior to placing reinforcing bars, all grease, dirt, mortar and other foreign substances shall be removed.

Reinforcing bars shall be placed in the position indicated and within the allowable tolerances specified. Before concrete is placed, all reinforcing bars shall be securely fastened and supported with chairs or other devices.

Inspection

Concrete shall not be placed until the reinforcing bar is inspected and permission for placing concrete has been granted by IFA. All concrete placed in violation of this provision will be rejected and shall be removed.

Bar Splices

Bar splices will be allowed only where shown on the Design Documents. Splices shall not be allowed unless a minimum of 2 in. can be provided between the spliced bar and the nearest adjacent bar.

Splices for bar sizes No. 11, or smaller, shall be made by means of a mechanical connector or by placing the bars in contact and wiring them together for the full length of a lap splice.

Splices for bars larger than No. 11 shall be made by use of a mechanical connector.

Splices made with mechanical connectors shall be installed in accordance with the manufacturer's written requirements.

Placement in Structural Slabs

Placing and fastening shall be in accordance with 703.06.

Basis of Item

Stainless steel reinforcing bars shall be quantified per pound, complete in place.

The items list shall include the following:

Item No.	Item Description	Unit Symbol
703-06028	Reinforcing Bars, Stainless Steel.....	LBS

The following shall be considered incidental to this item:

Furnishing all materials, equipment, labor, installation, metal chairs, spacers, clips, wire, or other mechanical means used for fastening or holding reinforcement in place, laps, and all incidentals necessary to complete this Work.

PRECAST PRESTRESSED HIGH STRENGTH CONCRETE

Description

This Work shall consist of fabricating, furnishing, and installing precast prestressed high strength concrete structural members having a design 28 day concrete compressive strength, f'c, as specified herein, in accordance with 105.03, 707, and the Design Documents.

Materials

Materials shall be in accordance with 702.03 and the following:

Admixtures and Admixture Systems.....912.03
Coarse Aggregates, Class A or Higher, Size No. 91.....904
Concrete Curing Materials.....912
Concrete Sealers.....909.09, 909.10
Elastomeric Bearings.....915.04
Fine Aggregates, Size No. 23.....904
Portland Cement, Types I, II, or III.....901.01
Reinforcing Bars.....910.01
Silica Fume.....901.04
Uncoated 7 Wire Strand.....910.01(b)7
Water.....913.01

Prestressing strands used in high strength concrete shall be uncoated 7 wire, low-relaxation, Grade 270 strands.

Structural steel for steel intermediate diaphragms shall be in accordance with 910.02(a) and shall be galvanized in accordance with ASTM A123 after cutting, bending, and welding. Bolts for steel intermediate diaphragms shall be 7/8 in. and in accordance with 910.02(f), except they shall be Type 1. All bolts, nuts, washers, and similar threaded fasteners shall be galvanized in accordance with ASTM A123 or may be mechanically zinc coated in accordance with ASTM B695, Class 50.

All high strength concrete structural members shall be manufactured in an INDOT approved plant in accordance with ITM 814.

High Strength Concrete Mix Design

The high strength concrete mix design shall be in accordance with the mix criteria stated herein. The mix design shall be submitted a minimum of 14 days prior to the trial batch and shall include the following:

(a) A list of all ingredients
(b) The source of all materials
(c) The gradation of the aggregates
(d) The absorption of the aggregates
(e) The SSD bulk specific gravity of the aggregates
(f) The specific gravity of silica fume
(g) The batch weights
(h) The names of all admixtures
(i) The range of admixture dosage rates as recommended by the manufacturer

Mix Design Criteria

The mix design shall be air entrained and shall produce concrete having the following properties:

Concrete Properties Requirements:
Maximum cementitious content .....800 lbs/cu yd

Silica fume content .....5.0%-6.5% of cementitious by weight
Air content .....6.5%±1.5%
Maximum water cementitious ratio 0.340
Maximum Concrete Temperature .....78°F
Minimum release strength .....8,000 psi
Minimum 28 day strength .....10,000 psi
Slump .....4 in. to 8 in.
Relative Yield .....1.000 ± 0.020

Air entraining cement will not be permitted.

Chemical admixture types F or G shall be used in combination with an air entraining admixture. High range water reducing, HRWR, and high range water reducing retarding, HRWRR, admixture systems may be used.

Chemical admixture types B, C, and E will be allowed only with IFA's written permission.

The amount of water present in the chemical admixtures shall be included when determining the water cementitious ratio.

Concrete temperature requirement is after delivery to the casting site, but prior to placement in the structural members.

Trial Batch

A trial batch shall be produced at least four weeks prior to beam fabrication. The concrete will be tested to verify that the mix design meets the concrete mix criteria. A minimum of 3 cu yds of concrete shall be batched at the plant facility to accurately represent the mix design and provide an amount of concrete to perform all tests from the same batch. The concrete shall be batched and mixed in accordance with the applicable requirements of 702.06 and 702.07. To ensure adequate dispersion of the silica fume, the batching sequence shall be reviewed for concurrence prior to batching of the concrete.

The Design-Build Contractor will test the trial batch and submit results to IFA. Trial batch concrete shall not be used for more than one test, except the concrete used for the unit weight may be used to conduct the air content test.

Four 6 in. diameter by 12 inch cylinders shall be cast. Two cylinders shall be tested for compressive strength at 3 days and averaged for a result. Two cylinders shall be tested for compressive strength at 28 days and averaged for a result.

All facilities and materials necessary to prepare and initially cure cast specimens shall be provided.

Following the trial batch demonstration all required test results and final mix design shall be submitted to IFA.

Except for adjustments to compensate for routine aggregate moisture fluctuations, changes in aggregate, SSD, batch weights shall be documented and submitted to the DMTE for approval, prior to use. Changes to the dosage amounts of admixtures will be allowed. A new mix design shall be prepared and successfully demonstrated for changes in the source of a material, the amounts of cementitious materials, increase in target water cementitious ratio, or the addition or deletion of admixtures.

Test Methods and Procedures

The following test methods and procedures shall apply for the Design-Build Contractor's process control and acceptance, with exceptions as listed below.

Air Content (a).....AASHTO T 152
Compressive Strength .....AASHTO T 22
Making and Curing Specimens .....AASHTO T 23
Moisture Content, Aggregate .....AASHTO T 255
Relative Yield .....AASHTO T 121
Sampling Fresh Concrete (b).....AASHTO T 141
Sampling Stockpiles Aggregates .....ITM 207
Sieve Analysis of Aggregates (c).....AASHTO T 27
Slump .....AASHTO T 119
Specific Gravity and Absorption, Coarse Aggregate (d) .AASHTO T 84
Specific Gravity and Absorption, Fine Aggregate (d)....AASHTO T 85
Temperature of Concrete .....AASHTO T 309
Water Cementitious Ratio .....ITM 403

(a) The exceptions for determining the air content shall be as follows:

1. The aggregate correction factor shall be determined in accordance with 6.4.3 except that the volume of water shall not be removed from the assembled and filled apparatus.

2. The aggregate correction factor test shall be rerun for confirmation if the test results for gravel are greater than 0.4% or if the test results for crushed stone are greater than 0.6%.

(b) The exception for sampling fresh concrete in the field shall be that the entire sample may be obtained from one portion of the load after at least 0.25 cu yds of concrete has been discharged.

(c) The exceptions for conducting a sieve analysis on aggregates are in accordance with 904.06.

(d) The exceptions for determining SSD bulk specific gravity and absorption for fine and coarse aggregate shall be that bulk specific gravity will be reported to the nearest 0.001 and the absorption reported to the nearest 0.01% point.

CONSTRUCTION REQUIREMENTS

General Requirements

Production of high strength concrete structural members shall not begin until the compression strength test results from the 28 day trial batch cylinders are acceptable to IFA.

Dimensions and design requirements for structural members shall be as shown on the Design Documents. Lengths and dimension tolerances shall be as shown on the Design Documents or as otherwise specified by IFA. A beam which is to include a field attached curb shall have curb reinforcement located longitudinally within 3/4 in. of the locations shown on the Design Documents. If detailed drawings are not included in the Design Documents, Working Drawings shall be submitted for approval in accordance with 105.02. Certified mill test

reports shall be furnished for all uncoated 7 wire strands.

Where temperature requirements are specified herein, the Design-Build Contractor shall provide IFA with written verification that the temperature requirements have been met.

Prior to the beginning of fabrication, a prefabrication meeting shall be held at the fabrication facility or another agreed upon location. The meeting shall be conducted by the Design-Build Contractor and attended by the fabricator's production supervisor and quality control inspector, and IFA. The Design-Build Contractor shall take notes of the meeting and distribute copies to all attending parties within five days of the date of the meeting. Items to be discussed at the meeting shall include a minimum of: fabrication and shipping schedule including hours of operation; line of communication between Design-Build Contractor and IFA; material test reports; Working Drawings; special fabrication methods; fabrication hold points for inspection; final inspection and acceptance of materials; method of shipment.

Structural steel diaphragms shall be fabricated and erected in accordance with 711. Steel diaphragms shall include all connection angles, plates, and associated hardware required for a complete installation. The Design-Build Contractor shall replace, re-galvanize, or repair all damaged galvanized material.

Steel and Concrete Requirements

(a) Reinforcing Bars

A tight coat of concrete grout extending 1/2 in. maximum from the top of high strength concrete structural members will be allowed to remain on reinforcing bars extending from high strength concrete structural members. All loose and flaky material on these reinforcing bars shall be removed. Lap splices shall be in accordance with 703.06.

(b) Prestressing Strands

The splicing of straight prestressing strands is acceptable provided that the location of the splice does not occur within a concrete structural member. Splicing of draped strands is not allowed. Spliced prestressing strands shall have the same twist or lap. For single strand tensioning, slippage of the splices should be considered in computing the elongation. For multiple strand tensioning, either all of the strands shall be spliced or not more than 10% of the strands shall be spliced. If all of the strands are spliced the average splice slippage shall be considered in computing the elongation. If 10% or less of the strands are spliced, no slippage allowance will be required.

Wire breaks will be allowed to remain on the prestressed concrete casting bed as follows:

Number of Strands in Bed	Wire Breaks
19 or fewer	0
20 through 39	1
40 through 59	2
60 or more	3

The ends of each allowed wire break shall be tied to the strand. If more than the permissible number of wire breaks appears in a particular strand pattern, or if more than one broken wire appears in an individual strand, such strands shall be removed and replaced.

The tolerance for the center of gravity for a prestressing strand group shall be ± 1/4 in. The tolerance for the longitudinal position of handling devices shall be ± 6 in.

(c) Concrete

The amount of time from mixing to placement and consolidation shall be a maximum of 30 minutes. The concrete shall not be retempered with additional amounts of chemical admixture types F or G after the initial mixing has been completed.

1. Cold Weather Concrete

Cold weather concrete shall be in accordance with 702.11, except the maximum concrete temperature shall be as specified herein.

2. Hot Weather Concrete

When it is necessary to fabricate high strength concrete structural members during times of hot weather the mix water may be chilled or an appropriate amount of ice may be added to the concrete mix to produce concrete of the temperature specified herein.

3. Acceptance Testing

Acceptance of high strength concrete structural members will be based on tests for slump, air content, and compressive strength. All slump, air content, and compressive strength tests shall be performed in the presence of IFA. Slump and air content measurements shall be obtained each time cylinders are made. Compressive strengths of the structural members shall be determined from cylinder sets described herein. The 28 day compressive strength shall be equal to or greater than the specified concrete compressive strength. The compressive strength of the concrete for each structural member will be determined from the average strength of the cylinder set representing that member. No individual compressive strength within a cylinder set representing a structural member shall be less than 90% of the specified concrete compressive strength.

All molds, facilities, labor, and materials necessary to prepare, cure, and test the cylinder sets shall be furnished.

a. Cylinder Set

A cylinder set shall consist of at least three cylinders obtained from three separate batches or loads of concrete used in casting a structural member. The batches or loads to be sampled may be as directed by IFA. All cylinders for acceptance shall be 6 in. diameter by 12 in., molded and field cured in accordance with ASTM C31. The Design-Build Contractor may make additional cylinder sets for use in acceptance testing.

All cylinders shall be identified by use of IFA-marked cylinder identification tags which are inserted a maximum of 3/8 in. into the top of each freshly molded cylinder. The cylinder number, a unique structural member identification number, temperature, air content, and slump of the concrete represented by each cylinder shall be referenced to the numbers on these cylinder identification tags and provided to IFA by the end of each day in which cylinders are cast.

Cylinders shall be stored as near as possible to the point of deposit of the concrete represented. All surfaces of the cylinders shall be protected from the elements in the same manner as the formed structural members. Cylinders shall be cured at the same temperature and moisture environment as the structural members.

Cylinders shall be in the moisture condition resulting from the selected curing treatment prior to testing. To meet these conditions, the cylinders shall be removed from the molds at the time the structural member is removed from the form Work. Cylinders shall be tested in accordance with ASTM C39. The Design-Build Contractor shall have on file a certificate of calibration for the testing machine. All cylinders in a cylinder set, for a given age, shall be broken within the time tolerances shown in ASTM C39. IFA will remove cylinder identification tags prior to the Design-Build Contractor testing the cylinders.

b. High Strength Concrete Structural Members

A minimum of two cylinder sets shall be made for each structural member cast. One cylinder set shall be tested and used to determine when the high strength concrete structural member has met or exceeded the required strength for detensioning the prestressing bed. If an additional cylinder set has been made, the Design-Build Contractor may test this set to determine if the required strength for detensioning of the prestressing bed has been met or exceeded, or if the required 28 day compressive strength has been met or exceeded prior to an age of 28 days. IFA will accept the results from compression testing of the additional cylinder set, in place of either the detensioning strength test results, or the 28 day compressive strength test results, if the results equal or exceed the respective compressive strength requirements. If an additional cylinder set was not made, or if the additional cylinder set does not meet or exceed the 28 day compressive strength requirement, the remaining cylinder set shall be tested at 28 days of age to determine the acceptability of the structural members.

Coring of high strength concrete structural members shall not be performed. High strength concrete structural members that have been cored will not be accepted. Compressive strength results for cylinders that exceed 28 days in age or results from cylinders that do not have the marked cylinder identification tag intact will result in the high strength concrete structural members not being accepted.

(d) Other Requirements

Inspection of the high strength concrete structural member during manufacture and checking and testing aggregates, cement, concrete, and steel specimens shall be performed. Inspection, checking, and testing performed will not relieve the Design-Build Contractor or the fabricator from performing their own quality control inspection, testing, and checking as necessary to maintain quality control over the manufacturing, handling, and curing procedure. A permanent record of the force applied to and measured elongation obtained for each prestressing strand and the identification of the strand and high strength concrete structural member to which the record applies shall be provided. This record shall be certified that it accurately represents the force applied and measured elongation by the fabricator’s production supervisor and provided to IFA prior to shipment.

Forms

High strength concrete structural members shall be manufactured in steel forms which are unyielding, smooth, mortar-tight, and of sufficient rigidity to prevent distortion due to pressure of the concrete. They shall be designed so that the finished concrete is in accordance with the required dimensions and contours. The design of the forms shall take into account the effect of vibration of the concrete as it is placed. Forms shall be chamfered 3/4 in. in accordance with 702.13(a). Exposed edges of curbs shall be beveled or edged. Forms shall be set and maintained true to the lines designated until the concrete is sufficiently hardened or for periods hereinafter specified. Interiors of forms

shall be treated with an approved formulated form coating which allows them to be released without adhering, discoloring, or otherwise damaging the concrete. Form coating materials shall not come in contact with either reinforcing bars or prestressing strands.

Placing and Finishing Cement Concrete

The temperature of the prestressing strands and forms shall be monitored between the time of the application of prestressing force and the placing the concrete. During hot weather, approved means shall be undertaken to cool the forms immediately prior to placing the concrete.

When abutment anchorage set-ups where prestressing strands are anchored to abutments that are independent from the form, thermal adjustments shall be made if the temperature of the prestressing strands at the time of tensioning differs by more than 25°F from the temperature of the concrete mixture during placement. This requirement will not apply to self-stressing beds.

Void boxes, inserts, and attachments shall be securely fastened to maintain the proper position during concrete placement and consolidation. All voids shall have weep holes or otherwise be vented during beam production until after the initial concrete set, then sealed before the beams are shipped.

Concrete, during and immediately after depositing, shall be consolidated with vibrators and suitable spading tools. Vibration shall be applied at the point of deposit and in the area of freshly deposited concrete. The vibrators used may be internal, external, or a combination of both. Internal vibration shall be of sufficient duration and intensity to consolidate thoroughly but shall not be continued so as to cause segregation. Vibration shall not be continued at any one point so that localized areas of grout are formed.

The entire operation of depositing and consolidating the concrete shall be conducted so that the concrete will be smooth, dense, and free from any honeycomb or pockets of segregated aggregates. The concrete in each HSHPC structural member shall be placed in one continuous operation. The outside vertical faces of fascia high strength concrete structural members and the exposed face and top of the curb section, if applicable, shall be finished in accordance with 702.21. The tops of all beams and the outside faces and bottom flanges of the fascia beams shall be sealed in accordance with 709.

Removal of Forms and Curing

Curing shall be in a suitable enclosure to minimize heat and moisture loss and insulated blankets may be used. The concrete in the form shall be maintained at a minimum temperature of 50°F during the entire curing cycle. Curing for high strength concrete structural members shall be done by wet curing without supplemental heat or by accelerated curing. During the period of initial set of the high strength concrete structural member and during the accelerated curing by radiant heat, the concrete shall be kept wet by the method outlined below for wet curing without supplemental heat. Side forms may be removed when no distortion, slump, or misalignment of the concrete will result.

Approval shall be obtained before curing is done by any means other than those outlined below.

(a) Wet Curing without Supplemental Heat

When wet curing without supplemental heat is used, the exposed surfaces of the high strength concrete structural members shall be covered by two layers of wet burlap and the burlap shall be kept wet to ensure that free water is present at all times. In lieu of using wet burlap, the Design-Build Contractor

may propose an alternate method which provides a moist environment with free water being present at all times. The Design-Build Contractor shall receive written approval from IFA prior to using the proposed alternate method. Additional curing of high strength concrete structural members will not be required provided the minimum specified ultimate strength can be obtained.

In high strength concrete structural members, wet curing without supplemental heat shall continue until such time as the compressive strength of the concrete reaches or exceeds the strength specified for transfer of prestress or detensioning. At this point wet curing is considered to have concluded. Detensioning shall be performed after wet curing has concluded, provided the compressive strength of the concrete in the high strength concrete structural member has met or exceeded the required strength for detensioning.

(b) Accelerated Curing

When accelerated curing of the concrete is used, it shall be done by low pressure steam or radiant heat curing. Radiant heat may be applied by means of pipes circulating steam, hot oil or hot water, or by electric heating elements. When steam is used, the jets shall be positioned so that they do not discharge directly on the concrete, forms, or cylinders. The steam shall be at 100% relative humidity to prevent loss of moisture and to provide moisture for proper hydration of the cement.

Except to maintain a minimum concrete temperature of 50°F, heat shall not be applied until the concrete has attained initial set. The time of initial set may be determined by ASTM C403. Once the penetration resistance, as performed in accordance with ASTM C403, equals or exceeds 500 psi accelerated curing may begin. When the initial set is not determined by ASTM C403, the initial application of heat shall be a minimum of 4 h after final concrete placement. When retarders are used and the initial set is not determined by ASTM C403, this time shall be increased to a minimum of 6 h after final concrete placement. Heat shall always be applied at a controlled rate following the initial set of the concrete, and an effective method of retaining the heat and moisture in the concrete shall be used during the entire curing cycle.

During the initial application of radiant heat or live steam, the temperature measured in the concrete shall increase at an average rate not exceeding 36°F/h. The maximum concrete temperature shall not exceed 158°F. A minimum of three time and temperature recording devices capable of recording temperatures in degrees Fahrenheit at intervals not exceeding 15 minutes shall be provided throughout a contiguous form group and common heat source. The time and temperature recording devices shall be located at the portions of the contiguous form group likely to experience the maximum temperatures during curing.

The curing temperature shall be sustained until the concrete has reached the minimum required strength for detensioning the high strength concrete structural members.

As the application of heat is discontinued, the concrete temperature shall decrease at a rate not to exceed 50°F/h. When the concrete temperature has reached 40°F or less above the ambient temperature outside the curing enclosure, accelerated curing is considered to have concluded. Detensioning shall be performed after accelerated curing has concluded, provided the compressive strength of the concrete in the high strength concrete structural member has met or exceeded the required strength for detensioning. A thermometer shall be provided to monitor ambient air temperatures. This thermometer does not need to have recording capabilities.

The time and temperature recording devices shall be used to verify compliance with the heating and cooling rates contained herein.

When multiple high strength concrete structural members are cast in the same bed, all members shall meet or exceed the specified release strength prior to detensioning. Additional curing of high strength concrete structural members will not be required provided the minimum specified ultimate strength can be obtained.

A grinder or other methods that induce minimal amounts of heat into the prestressing strand shall be used to cut off prestressing strands. The ends of the concrete high strength concrete structural member where prestressing strands have been cut to be flush with the end of the member shall be coated with bituminous mastic sealant in accordance with 907.11. All prestressing strands that are exposed and protrude from the end of the beam shall be protected from rusting by use of a spray, brush, or roller-applied rust-inhibiting paint or other material that is not considered detrimental to bonding with concrete.

Handling and Shipping

High strength concrete structural members shall not be subjected to excessive abuse which produces crushing or undue marring of the concrete. All high strength concrete structural members damaged during handling, storing, transporting, or erecting shall be replaced. Unless otherwise approved, high strength concrete structural members shall be handled with a suitable hoisting device provided with a spreader sling. The spreader shall be of sufficient length to prevent horizontal forces being produced in the structural member due to lifting and shall be equipped with leads and hooks at each end. The high strength concrete structural members shall be lifted by the devices shown on the Design Documents. Proposed alternate lifting devices and procedures shall be approved prior to use and shown on the Working Drawings. If any other method of handling is used, it shall be shown on the Working Drawings and approved prior to use. If the method produces horizontal forces in the structural member, sufficient reinforcement shall be added to compensate for them.

The high strength concrete structural members shall remain in an upright position at all times and shall be supported as indicated herein when in storage and during transportation to the construction site.

In storage, all high strength concrete structural members shall be fully supported across their width on battens not less than 4 in. wide with one being placed at each end at the centerline of the bearing. The supports of the structural members while in storage shall be maintained in a level position so no twisting occurs.

During transportation, the high strength concrete structural members shall be supported with truck bolsters or battens no less than 4 in. wide which are padded with no less than 1/2 in. of rubber. The ends of I-beams, U-beams, and bulb-T beams shall extend no more than the depth of the beam and not more than 3.5 ft beyond the supports. The ends of box-beams shall extend no more than 1 1/2 times their depth and not more than 3 feet beyond the supports. The ends of slabs shall extend no more than the depth of the beam beyond the supports. Supports of cantilever beams shall be as shown on the Design Documents. Trucks with double bolsters will be allowed, provided the beams are fully seated on the outer bolsters and the inner bolsters are no more than 8 ft from the ends of the beams. Wood blocks or other suitable material shall be placed under the tie chains to prevent chipping the concrete.

Placing High Strength Concrete Structural Members

Erection of high strength concrete structural members shall commence at the centerline and proceed out to the curb, one member at a time. As each structural member is placed, the transverse tie bars, if shown on the Design Documents, shall be inserted and secured. Any shifting of the structural members shall be done while they are held free of the supports by the hoisting device. The use of a steel pinch bar will not be allowed. High strength concrete structural members shall be set to proper line and grade with uniform bearing on bridge seats, mortar joints, or bearing pads as required on the Design Documents. When required, high strength concrete structural members shall be secured to the pier or bent with dowel rods. Holes for dowels shall be filled with mortar at fixed ends and with crack or joint filler at expansion ends. Longitudinal keyway joints shall be cleaned. A coat of cement mortar shall be scrubbed on the surface. The joint shall be filled with a non-shrinking grout composed of one part portland cement, two parts No. 23 fine aggregate, and an approved non-shrinking additive or a non-shrink, non-metallic cementation grout in accordance with ASTM C1107. All bolts or drains shown on the Design Documents as necessary or desirable to be placed in the concrete shall be placed by the methods and at the locations shown on the Design Documents. Necessary tie rods, tie bolts, and hardware for tying high strength concrete structural members together shall be furnished.

Dowel holes shall not be grouted nor concrete or the forming thereof, be placed in floor slabs, diaphragms, or shear keys prior to receipt of complete documentation of the acceptability of the high strength concrete structural members and bearing pads, including the satisfactory laboratory reports and certifications in accordance with 915.04(e). Neither the high strength concrete structural members, nor the bearings will be considered incorporated into the Work, and neither will be paid for until this documentation is accomplished satisfactorily.

Railing, when required, shall be of the type shown on the Design Documents. The component parts shall be in accordance with 706, unless otherwise indicated on the Design Documents. Other high strength concrete structural members shall be placed in the structure in accordance with the Design Documents and the specifications or special provisions indicated for the type of structure being built.

Cranes or other heavy erection equipment may be operated on the high strength concrete structural members only if approved in writing and if a proposed operating procedure is submitted showing loading, distribution of loads, resulting stresses, and that the design of the high strength concrete structural members is satisfactory to allow. However, such approval shall not relieve the Design-Build Contractor of any damage from this operation.

Basis of Item

Precast prestressed high strength structural members shall be quantified per linear foot for structural member, concrete, of the type and size specified. Structural steel for intermediate diaphragms shall not be quantified.

The items list shall include the following:

Item No.	**Item Description**	**Unit Symbol**
707-XXXXX	Structural Member, Concrete, ____, ____ (type, size)	LFT

The following shall be considered incidental to this item:

Conducting a trial batch, high strength concrete, reinforcing bars, elastomeric bearing pads, modifications to bearing pads, bearing beams or bearing assemblies, bearing plates, expanded polystyrene, threaded reinforcing bars, threaded inserts in fascia beams, hex bolts, sealer on the outside face and bottom flange of fascia beams and on the tops of all beams, and other necessary incidentals.

Providing all molds, cylinder identification tags, facilities, labor, and materials necessary to prepare and cure the test specimens.

Removing and replacing prestressing strands due to excessive wire breakage and replacing high strength concrete structural members damaged during handling, storing, transporting or erecting.

All materials, including galvanizing, labor, and equipment necessary for furnishing and installing steel intermediate diaphragms.

Time and temperature recording devices and their monitoring.

Field office and providing the field office items listed herein.

POST-TENSIONING WORKS

Description

This Work shall consist of post-tensioning precast or cast-in-place concrete by furnishing, placing, tensioning, and grouting prestressing steel in accordance with details shown on the Design Documents, in accordance with 105.03, 707, and as described herein. It includes prestressing by either the pretensioning or post-tensioning methods or by a combination of these methods.

This Work shall include furnishing and installing any appurtenant items necessary for the particular post-tensioning system to be used, including ducts, anchorage assemblies, post-tensioning strands, grouting ducts, local zone reinforcing bars, all documentation of the operation, and testing.

Materials

Ducts

Duct material shall be corrugated plastic and made from either polyethylene or polypropylene. Ducts shall be embedded in concrete. The minimum acceptable radius of curvature shall be established by the duct supplier according to standard methods. The duct shall have a thickness as shown in Table 1. Ducts shall have a white coating on the outside or shall be of white material with ultraviolet stabilizers added.

Polyethylene duct shall be fabricated from resins meeting or exceeding the requirements of ASTM D3350 with a cell classification of 345464A.

Polypropylene duct shall be fabricated from resins meeting or exceeding the requirements of ASTM D4101 with a cell classification range of PP0340B14541 to PP0340B67884. Resin containing antioxidants with a minimum oxidation induction time, in accordance with ASTM D3895 of not less than 20 minutes shall be used.

Rigid smooth black polyethylene ducts for use where the tendon is not embedded in concrete shall be rigid pipe manufactured from 100% virgin polyethylene resin meeting the requirements of ASTM D3350 with a minimum cell class of 344464C. A resin containing antioxidants with a minimum OIT according to ASTM D3895 of not less than 40 minutes shall be used. The duct shall be manufactured with a dimensional ratio, DR, of 17.0 as established by either ASTM D3350 or ASTM F714 as appropriate for the manufacturing process used.

The duct areas shall be in accordance with Article 5.4.6.2 of the AASHTO LRFD Bridge Design Specifications.

Table 1

Duct Shape	Duct Diameter (inch)	Duct Thickness (inch)
Flat	Any size	0.08
Round	I.D. < 2.375	0.08
Round	2.375 < I.D. < 4.0	0.10
Round	I.D. > 4.0	0.12

A type C certification in accordance with 916 shall be provided for the duct.

Duct Fittings

Coupling and transition fittings for ducts formed by sheathing shall be

polyethylene or polypropylene and shall be air and watertight and of sufficient strength to prevent distortion or displacement of the ducts during concrete placement and tendon grouting.

A type C certification in accordance with 916 shall be provided for the duct fittings.

Inlets, Outlets, Valves and Plugs

Grout inlets, outlets, and threaded plugs shall be made of either ASTM A240 Type 316 stainless steel, nylon, or polyolefin materials. Products made of nylon shall have a cell class of either S-PAO141, weather resistant, S-PA0231, or S-PA0401, with an ultimate strength not less than 10,000 psi with UV stabilizer added, in accordance with ASTM D5989. Products made of polyolefin shall contain antioxidants with a minimum oxidation induction time of not less than 20 minutes in accordance with ASTM D3895.

Inlets, outlets, valves, and plugs shall be designed and tested to resist a minimum pressure of 150 psi. Inlets and outlets shall have a minimum inside diameter of 3/4 in. for multi-strand tendons and 3/8 in. for single-bar or four-strand tendons.

A type C certification in accordance with 916 shall be provided for the inlets, outlets, valves, and plugs.

Permanent Grout Caps

Permanent grout caps shall be made from polymer or ASTM A240 Type 316L stainless steel. The resins used in the polymer shall be nylon, Acrylonitrite Butadiene Styrene (ABS) or polyester. For products made from nylon, the cell class of the nylon according to ASTM D5989 shall be S-PA0141, weather resistant, S-PA0231 or S-PA0401, with an ultimate strength not less than 10,000 psi with UV stabilizer added. The cap shall be sealed with "O" ring seals or precision fitted flat gaskets placed against the bearing plate. A grout vent shall be placed on the top of the cap. Grout caps shall be rated for a minimum pressure rating of 150 psi. ASTM A240 Type 316L stainless steel bolts shall be used to attach the cap to the anchorage.

A type C certification in accordance with 916 shall be provided for the permanent grout caps.

Grout

Grout shall be a cement-based, thixotropic, prebagged grout supplied by a grout manufacturer. The grout shall be prebagged in plastic lined or coated containers, stamped with the date of manufacturer, lot number, and mixing instructions. Materials with a total time from manufacturer to usage shall not exceed six months, and on-site storage shall be limited to one month. Grout materials shall be stored in a weatherproof location, and any grout exposed to excessive moisture which contain clumps shall be rejected. Storage in the open may be allowed by IFA, in which case a raised platform and adequate waterproof covering shall be provided.

The grout shall be mixed in accordance with the manufacturer's recommendations. The water used in the grout shall be potable, clean, and free of injurious quantities of substances known to be harmful to portland cement or prestressing steel.

Grouts shall achieve a non-bleeding characteristic. Grout shall contain no aluminum powder or gas generating system that produces hydrogen, carbon dioxide, or oxygen. Cementitious grout shall meet or exceed the specified

physical properties stated in 10.9.3 of the AASHTO LRFD Bridge Construction Specifications.

A type B certification in accordance with 916 shall be provided for the prebagged grout. The limits of the physical properties stated in the AASHTO LRFD Bridge Construction Specifications shall be shown on the certification.

Epoxy Grout for Anchorage Protection

The epoxy grout used for encapsulation and protection of post-tensioning anchorages shall be a three component epoxy grout consisting of resin, hardener, and aggregate, with all components supplied by the epoxy grout manufacturer. No additional fillers shall be added. Products shall be delivered in original containers with manufacturer's name, date of manufacture, product identification label and batch numbers. Materials shall be used within the manufacturer's recommended shelf life and shall be stored in full compliance with manufacturer's recommendations. The epoxy grout shall be mixed and installed in accordance with the manufacturer's recommendations.

The epoxy grout system shall meet the following requirements.

Physical Test	Specification	Requirement
Compressive Strength Cubes 7 Day Cure at 77°F	ASTM C 579B	>10,000 psi
Tensile Strength at 7 days	ASTM C 307	>2,100 psi
Flexural Strength at 7 Day Cure at 77°F	ASTM C 580	>3,600 psi
Modulus of Elasticity 7 day Cure at 77°F	ASTM C 580	< 2,100,000 psi
Coefficient of Thermal Expansion at 74 to 210°F	ASTM C 531	< 20 x 10 - 6 in/in/°F
Peak Exotherm, Specimen 12 x 12 x 3 in.	ASTM D 2471	< 150°F
Slant Shear at 7 days (Bond Strength to Concrete)	ASTM C 882	> 3000 psi
Thermal Compatibility	ASTM C 884	5 Cycles Passed
Linear Shrinkage at 7 days	ASTM C 531	0.025%
Flowability and Bearing Area	ASTM C 1339	90% Contact area
Gel Time, Specimen 12 x 12 x 3 in.	ASTM D 2471	< 4 h

A type B certification in accordance with 916 shall be provided for the epoxy grout. The limits of the physical tests shown above shall be shown on the certification.

Elastomeric Coating System

An elastomeric coating system shall be used to provide a waterproof barrier over post-tensioning anchorages or other areas shown on the Design Documents. The components of the coating system shall be supplied by a single manufacturer and sold as a waterproof coating system. The surface preparation and application of the coating system shall be applied in accordance with the manufacturer's specifications.

Upon curing, all coatings and/or coating systems shall produce an adherent coating that is visually uniform and capable of performing according to its designated purpose for a service life greater than 20 years. The composition of the coating shall be at the discretion of the manufacturer, but the finished product shall meet all requirements of this specification. All coatings shall be designed for a marine, coastal environment and shall be self-curing. Coatings that are multi-component shall be prepackaged in required ratios for ease of mixing.

A type C certification in accordance with 916 shall be provided for the elastomeric coating system.

Tendons

Tendons shall be uncoated 7 wire stand and shall be in accordance with 910.01(b) 7.

Anchorage Assemblies and Couplers

Post-tensioning anchorages shall be designed and tested to resist at least 95% of the actual ultimate tensile strength of the prestressing steel, when tested in an unbonded state, without exceeding the anticipated anchor set. Tendon couplers shall not be used unless shown on the Design Documents or approved by IFA. All embedded portions of the anchorage assembly shall be galvanized in accordance with ASTM A123. All local zone reinforcing required by the design calculations provided in accordance with the Working Drawings shall be epoxy coated and in accordance with section 910.01.

A type C certification in accordance with 916 shall be provided for the anchorage assemblies and couplers.

Material Traceability

Stored and installed post-tensioning system shall be fully traceable to production lots and installation records. The post-tensioning system supplier shall maintain a complete list of all traceability numbers and documentation for materials supplied to the Project. Records kept by Design-Build Contractor shall maintain traceability of stored and installed post-tensioning system materials to specific tendon numbers. Traceability documentation and records shall be formally transferred to IFA.

Traceability shall be provided for all load-bearing or load-transfer components of the post-tensioning system. Specifically included are the following components/materials: strand, bar, bearing plates, wedge plates, wedges, nuts, couplers, duct, duct couplers, pipe, trumpets, grout tubes, and permanent grout caps. Traceability for miscellaneous installation aids not permanently incorporated in the structure is not required.

Construction Requirements

Personnel Qualifications

The Foremen of each installation and stressing crew shall have a minimum of five years of bridge construction experience with a minimum of two years of

experience in post-tensioning related operations and a minimum of one year as the foreman in responsible charge of post-tensioning related operations. The Foremen shall be certified as PTI Level 1 and 2 Multistrand and Grouted PT Specialist. At least one other member of each installation and stressing crew shall be certified as PTI Level 1 Multistrand and Grouted PT Specialist.

The Foremen of each grouting crew shall have a minimum of five years of bridge construction experience with a minimum of two years of experience in post-tensioning related operations and a minimum of one year as the foreman in responsible charge of post-tensioning related operations. The Foremen and the person operating the grouting and pumping equipment shall each be certified as ASBI Certified Grouting Technicians. At least one other member of each grouting crew shall be certified as having completed the ASBI Grouting Training program.

Working Drawings and Grout Plan

The Design-Build Contractor shall prepare and submit to IFA Working Drawings and Grout Plan, in accordance with 105.02, for the post-tensioning system proposed for use. Preparation of the post-tensioning Working Drawings and grout plan shall be completed by a Registered Professional Engineer in the State of Indiana with a minimum of five years' experience in post-tensioned concrete. Fabrication or installation of post-tensioning material shall not begin until IFA has approved the drawings.

The Working Drawings and Grout Plan of the post-tensioning system shall show complete details and substantiating calculations of the method, materials, and equipment the Design-Build Contractor proposes to use in the post-tensioning operations.

The Working Drawings, including stressing calculations, shall be in accordance with section 5.0 of PTI/ASBI M50.3-12 Guide Specification for Grouted Post-Tensioning.

The grouting procedures shall be devised to ensure that the ducts shall be properly filled by grout. These procedures shall cover in detail, the following:

(a) Type, quantity and brand of materials used in grouting, including all certifications required;
(b) Type of equipment needed, including capacity in relation to demand and Working condition, as well as provisions for back-up equipment and spare parts;
(c) Types and locations of inlets and outlets;
(d) Types and sizes of grout hoses and connections;
(e) Duct cleaning methods prior to grouting;
(f) Mixing and pumping procedures;
(g) Direction of grouting;
(h) Sequence of use of the inlets and outlets;
(i) Procedures for handling blockages; and
(j) The names of the persons in charge and the other personnel who will perform the grouting operation, including their relevant experience and skill.

The Design-Build Contractor shall record the progress of the gouting operations for each duct in accordance with section 5.6.7 of PTI M55.1-12 and submit a written report to IFA within 72 h of grouting.

Working Drawings and Grout Plan shall be submitted in accordance with 105.02.

Construction Hold Points

A hold point is a mandatory verification point that requires the Design-Build Contractor to notify or submit the identified items to IFA beyond which work shall not proceed until approval is given by IFA. The following hold points shall apply:

(a) Prior to placement of concrete around the ducts, inspection and approval of the PT ducts, inlets and outlets, anchorage, reinforcing steel, and pre-concreting duct pressure test;
(b) Prior to beginning the installation of PT strand, inspection and approval of the strands, PT duct proving and post-concreting duct pressure testing;
(c) Prior to commencement of grouting operations, inspection and approval of the grouting apparatus and set up, and approval of the stressing records;
(d) Prior to commencement of the preparation and encapsulation of the anchor heads, inspection and approval of grouting.

Duct Placement

Ducts shall be rigidly supported at the proper locations in the forms by ties to reinforcing bars which are adequate to prevent displacement during the concrete placement. Supplementary support bars shall be used where needed to maintain proper alignment of the duct. Hold-down ties to the forms shall be used when the buoyancy of the ducts in the fluid concrete would lift the reinforcing bars. Duct for longitudinal or transverse post-tensioning in the flanges shall be supported at intervals not to exceed ft. Ducts in webs for longitudinal post-tensioning shall be tied to stirrups at intervals not to exceed 2 ft and shall be supported on each side of a duct joint.

Joints between sections of duct shall be coupled with positive connections which do not result in angle changes at the joints and will prevent the intrusion of cement paste.

After placing ducts, reinforcement and forming is complete, an inspection shall be made to locate possible duct damage. All unintentional holes or openings in the duct shall be repaired prior to concrete placing.

Grout openings and vents shall be securely anchored to the duct and to either the forms or to reinforcing bars to prevent displacement during concrete-placing operations. After installation in the forms, the ends of ducts shall at all times be sealed to prevent the entry of water or debris.

Duct Position Tolerances

Tolerances	Vertical Position (inch)	Lateral Position (inch)
Horizontal tendons in slabs or in slab regions of larger members	± 1/4	± 1/2
Longitudinal draped superstructure tendons in webs. Tendon over supports or in middle third of span.	± 1/4	± 1/4
Tendon in middle half of web depth	± 1/2	± 1/4
Longitudinal, generally horizontal, superstructure tendons usually in top or bottom of member	± 1/4	± 1/4
Horizontal tendons in substructure and foundations	± 1/2	± 1/2

	Longitudinal position (inch)	Transverse position (inch)
Vertical tendons in webs	± 1	± 1/4
Vertical tendons in pier shafts	± 1/2	± 1/2

Additionally, the following shall apply:

1. In all other cases, locate tendons within ± 1/4 in. in any direction.
2. Entrance and exit angles of tendon paths at anchorages or at faces of concrete shall be within ±3° of desired angle measured in any direction and any deviations in the alignment are accomplished with smooth transitions without any kinks.
3. Angle changes at duct joints shall not be greater than ±3° in any direction and shall be accomplished with smooth transitions without any kinks.
4. Locate anchorages within ±1/4 in. of desired position laterally and ±1 in. along the tendon except that minimum cover requirements shall be maintained.
5. Position anchorage confinement reinforcing in the form of spirals, multiple U-shaped bars or links, to be properly centered around the duct and to start within 0.5 in. of the back of the main anchor plate.
6. If conflicts exist between the reinforcement and post-tensioning duct, the Design-Build Contractor shall adjust the reinforcing.

Inlets and outlets shall be at least ¾ in. diameter. Connection to ducts shall be made with metallic or plastic structural fasteners. The inlets and outlets shall be mortar tight, taped as necessary, and constructed with either mechanical or shrink wrap connections. Inlets and outlets shall provide means for injection of grout through the vents and for sealing to prevent leakage of grout. Low-point inlets and outlets shall remain open until grouting is started.

All ducts shall be supplied with inlets and outlets at the following locations:

(a) At the anchorage area of the tendon;
(b) At the high points of the duct, when the vertical distance between the highest and lowest point is more than 20 in.;
(c) Where outlets are placed at the high points, at a distance not to exceed 39 in. in both directions from the high-point outlets;
(d) An inlet shall be placed at or near the lowest point of a tendon;
(e) Outlets shall be placed at all low points, and shall be free draining;
(f) At major changes in the cross section of the duct, such as couplers and anchorages; and
(g) At other locations shown on the Design Documents.

After the ducts have been placed, the openings at the ends of the ducts shall be sealed to prevent the entry of moisture.

Pre-Concreting Duct Pressure Test

Prior to testing, inlets, outlets, and drains shall either be capped or have their shut-off valves closed. The Design-Build Contractor shall pressurize the completed duct assembly to an air pressure of 5 psi and lock off the outside air source and inspect for leaks. The Design-Build Contractor shall monitor and measure the pressure maintained within the closed assembly. Locations of leakage shall be identified, repaired, or reconstructed, and the repaired

reassembled duct system retested. The cycle of testing, repair, and retesting of each completed duct assembly shall continue until the completed duct assembly completes a one minute test with a maximum pressure loss of 2 psi.

Proving of Post-Tensioning Ducts

Upon completion of concrete placement, the Design-Build Contractor shall prove that the post-tensioning ducts are free and clear of any obstructions or damage and are able to accept the post-tensioning tendons by passing a torpedo through the ducts. The torpedo shall have the same cross-sectional shape as the duct, and be 1/4 in. smaller all around than the clear nominal dimensions of the duct. For straight ducts, a torpedo at least 2 ft long shall be used. For curved ducts, the length shall be determined so that when both ends touch the outermost wall of the duct, the torpedo is ¼ in. clear of the innermost wall. If the torpedo will not travel completely through the duct, the member shall be rejected unless a workable repair is approved by IFA.

Post-Concreting Duct Pressure Test

Before placing the strands, install all grout caps, inlets and outlets and test the tendon with compressed air to determine if duct connections require repair. In the presence of IFA, pressure the tendon to 50 psi and lock-off the outside air source. Record the pressure loss for 1 minute. A pressure loss of up to and including 25 psi is acceptable for tendons having a length of equal to or less than 150 ft and a pressure loss of up to and including 15 psi is acceptable for tendons longer than 150 ft. If the pressure loss exceeds the allowable, repair the leaking connections using methods approved by IFA and retest.

Placement of PT Strands

Post-tensioning steel shall not be removed from its protective packaging until immediately prior to installation in the forms and placement of concrete. Openings in the packaging shall be resealed as necessary to protect the unused steel.

The Design-Build Contractor shall demonstrate to the satisfaction of IFA that the ducts are free of water and debris immediately prior to installation of the steel.

Anchorage devices or block-out templates for anchorages shall be set so that their axis coincides with the axis of the tendon and anchor plates are normal in all directions to the tendon.

After tendons are placed in ducts, the openings at the ends of the ducts shall be sealed to prevent the entry of moisture.

Tendons shall be grouted within 15 days of placement.

In Place Friction Test

A minimum of one tendon in each tendon group type shall tested for in place friction. Tendon group types include cantilever tendons, continuity tendons, draped external tendons, or continuous profiled tendons passing through one or more spans. The selected tendon shall represent the size and length of the group of tendons being tested. The in-place friction test is not required for straight tendons used in flat slabs.

The test procedure shall consist of stressing the tendon at an anchor assembly with a load cell or a second certified jack at the dead end. The test specimen shall be stressed to 80% of ultimate tendon strength in eight equal

increments. For each increment, the gauge pressure, elongations and load cell force shall be recorded. The test shall account for any wedge seating in both the live end (i.e., back of jack) and the dead end (i.e., back of load cell) and any friction within the anchorages, wedge plates and jack as a result of slight deviations of the strands through these assemblies. For long tendons requiring multiple jack pulls with intermediate temporary anchoring, an accurate account of the elongation at the jacking end allowing for intermediate wedge seating and slip of the jack's wedges shall be kept.

If the elongation's fall outside a ± 5% range compared to the anticipated elongations based on expected friction coefficients, the reason shall be investigated and detailed calculations confirming the final tendon forces are in agreement with the requirements of the released-for-construction drawings shall be submitted to IFA.

Significant shortfall in elongations may indicate poor duct alignment and/or obstructions. Such elongations shall be corrected or compensated for in a manner acceptable to IFA.

One successful friction test for each tendon group in each structure will be required.

If there are irreconcilable differences between forces and elongations, or other difficulties during the course of routine stressing operations, IFA may require additional in place friction tests.

The apparatus and methods used to perform the test shall be submitted to IFA.

Tensioning

Tendons shall be tensioned by hydraulic jacks to produce the forces shown on the Design Documents or on the approved Working Drawings with appropriate allowances for all losses. Losses to be provided for shall be as specified in Articles 5.9.3 of the AASHTO LRFD Bridge Design Specifications, 8th Edition. The losses shall also include the anchor set loss appropriate for the anchorage system employed.

The strand stress prior to seating and immediately following shall not exceed the values allowed in Article 5.9.2 of the AASHTO LRFD Bridge Design Specifications, 8th Edition.

Prior to tensioning any member, the Design-Build Contractor shall demonstrate to the satisfaction of IFA that the tendons are free and unbonded in the duct.

All strands in each tendon, except for those in flat ducts with not more than four strands, shall be stressed simultaneously with a multi-strand jack.

Except as provided herein or when specified on the Design Documents or on the approved Working Drawings, tendons in continuous post-tensioned members shall be tensioned by jacking at each end of the tendon.

Individual wire failures may be accepted by IFA, provided not more than one wire in a strand is broken and the area of the broken wires does not exceed 2% of the total area of the post-tensioning steel in the member.

Prestressing Equipment

Hydraulic jacks used to stress tendons shall be capable of providing and

sustaining the necessary forces and shall be equipped with either a pressure gage or a load cell for determining the jacking stress. The jacking shall provide an independent means by which the tendon elongation can be measured. The pressure gauge shall have an accurately reading dial at least 6 in. in diameter or a digital display, and each jack and its gage shall be calibrated as a unit with the cylinder extension in the approximate position that it will be at final jacking force, and shall be accompanied by a certified calibration chart or curve. The load cell shall be calibrated and shall be provided with an indicator by means of which the prestressing force in the tendon may be determined. The range of the load cell shall be such that the lower 10% of the manufacturer's rated capacity will not be used in determining the jacking stress. When approved by IFA, calibrated proving rings may be used in lieu of load cells.

Recalibration of gages shall be done at least annually and whenever gage pressure and elongations indicate materially different stresses. Certified calibration charts and curved shall be submitted to IFA prior to stressing.

Measurement of Stress

A record of gauge pressures and tendon elongations for each tendon shall be provided by the Design-Build Contractor to IFA. Elongations shall be measured to an accuracy of 0.0625 inch. Stressing tails of post-tensioned tendons shall not be cut off until the stressing records have been approved.

The stress in tendons during tensioning shall be determined by the gage or load-cell readings and shall be verified with the measured elongations. Calculations of anticipated elongations shall utilize the modulus of elasticity, based on nominal area, as furnished by the manufacturer for the lot of steel being tensioned.

All tendons shall be tensioned to a preliminary force as necessary to eliminate any take-up in the tensioning system before elongation readings are started. This preliminary force shall be between 5% and 25% of the final jacking force. The initial force shall be measured by a dynamometer or by other approved method, so that its amount can be used as a check against elongation as computed and as measured. Each strand shall be marked prior to final stressing to allow measurement of elongation and to ensure that all anchor wedges are set properly.

It is anticipated that there may be discrepancy in indicated stress between jack gauge pressure and elongation. When a discrepancy between gauge pressure and elongation is greater than 5% in tendons greater than 50 ft long or 7% in tendons 50 ft or less, the source of the error shall be determined and corrected before proceeding.

Record of Stressing Operation

A record of the following post-tensioning operations shall be kept for each tendon installed:

1. Project contract number, structure number, and beam line identification,
2. Design-Build Contractor and foreman names,
3. Tendon location, size, and type,
4. Date and time of initial installation,
5. Complete strand identification and data,
6. Assumed and actual cross-sectional area;
7. Assumed and actual modulus of elasticity,
8. Date and time stressing completed,
9. Jack and gage numbers per end of tendon,
10. Required jacking force,
11. Gage pressures at 20%, 40%, 60%, and 100% of the jacking force,

12. Charting of anticipated and actual elongations at 20%, 40%, 60%, and 100% of the jacking force,
13. Anticipated and actual anchor sets,
14. Stressing sequence,
15. Stressing mode indicating which end or ends of the tendon were stressed,
16. Witnesses, crew and inspector names,
17. Date grouted, days from stressing to grouting, grouting pressure applied, and injection locations, and
18. Record of any relevant information including problems encountered and resolution, pourback and bitumastic dates.

IFA shall be provided with a complete copy of all stressing operations and the jack calibration forms.

Within 4 h after stressing and prior to grouting, tendons shall be protected against corrosion or harmful effects of debris by temporarily plugging or sealing all openings and vents.

Grouting Equipment

The pump shall be a positive displacement type and be able to produce an outlet pressure of at least 0.150 ksi. The pump shall have seals adequate to prevent introduction of oil, air, or other foreign substances into the grout, and to prevent loss of grout or water.

A pressure gauge having a full-scale reading of no greater than 0.300 ksi shall be placed at some point in the grout line between the pump outlet and duct inlet.

The grouting equipment shall contain a screen having clear opening of 1/8 in. maximum size to screen the grout prior to its introduction into the grout pump.

The grouting equipment shall utilize gravity feed to the pump inlet from a hopper attached to and directly over it. The hopper shall be kept at least partially full of grout at all times during the pumping operation to prevent air from being drawn into the post-tensioning duct.

The grouting equipment shall be capable of continuously grouting the largest tendon in the Project in no more than 20 minutes.

The group machinery shall have a mixing tank with a high-speed shear colloidal mixer, a holding tank with an agitator, and a circulation system allowing the grout from the holding tank to be moved back to the mixing tank. The placing pump shall have exact pressure control capabilities and shall be fed by gravity from the holding tank.

Mixing of Grout

A chloride ion test shall be performed prior to adding water.

Water shall be added to the mixer first followed by cement grout. Grout shall be mixed in accordance with the manufacturer’s instructions using a colloidal mixer to obtain a homogeneous mixture. The accuracy of the batching shall be ±1% for the mixing water. A fluidity test shall be performed on the mixed grout prior to beginning the injection process. Target flow rates as a function of mixer type used and ambient temperature shall be obtained from the grout manufacturer. The grouting process shall not be started until proper grout properties have been obtained.

The grout shall be used within 30 minutes of the first addition of water. Water shall not be added to increase flowability which has been decreased by delayed use of the grout.

Grout Testing

1. Chloride Ion Test. One test per 40,000 lb of material before the addition of water shall be completed. A minimum of one test on mixed grout per project shall be completed. The test shall be in accordance with AASHTO LRFD Bridge Construction Specifications, 4th Edition, table 10.9.3-2.
2. Pressure Bleeding Test. One test per day shall be completed. The sample shall be taken at the mixer. The test shall be in accordance with AASHTO LRFD Bridge Construction Specifications, 4th Edition, table 10.9.3-2.
3. Mud balance tests. A minimum of two tests per day shall be completed. Additional tests shall be completed when there is a visual or apparent change in the characteristics of the grout at the mixer and the grout at the duct outlet. The test shall be in accordance with ANSI/API Mud Balance Test, Section 4.4.8. The acceptable range of wet density shall be established for the optimized grout using the minimum and maximum water dosage per this specification and the grout manufacturer's recommendations.
4. Strength test. A minimum of one test per day shall be completed. The test shall be in accordance with AASHTO LRFD Bridge Construction Specifications, 4th Edition, table 10.9.3-2.
5. Fluidity Tests. One test at the mixer and one test at the duct outlet shall be performed every 2 h of grouting operations for each duct. The test shall be in accordance with AASHTO LRFD Bridge Construction Specifications, 4th Edition, table 10.9.3-2. In addition to the requirements given in the aforementioned table, the efflux time shall be within 5 seconds of the values established during laboratory testing.

Grout tests performed by the Design-Build Contractor will be monitored by IFA.

Injection of Grout

All grout vents shall be opened before grouting starts. Injection and ejection vents with positive shut-offs shall be provided. Grout shall be injected from near the lowest end of the tendons in an uphill direction while maintaining a continuous one-way flow. Grout shall be allowed to flow from the first injection vent until any entrapped air has been removed prior to closing that vent. Remaining vents shall be closed in sequence in the same manner. A continuous flow of grout at a rate between 17 and 50 ft of duct per minute shall be maintained. The flow rate of grout shall be slow enough to avoid air entrapment and segregation of the grout and ensure complete filling of the duct.

The method of injecting grout shall ensure complete filling of the ducts and complete surrounding of the tendon or bar with grout. Grout shall be pumped through the duct and flow continuously at the first outlet after the inlet, until no visible slugs water or air are ejected and consistency of the grout is equivalent to that of the grout injected, at which time the outlet shall be closed.

All outlets shall be closed in a similar manner one after another in the direction of the flow except that at intermediate crests; outlets placed a short distance downstream of the crest shall be closed before their associated crest outlet.

The pumping pressure at the injection vent shall not exceed 150 psi.

Normal operations shall be performed at approximately 75 psi. If the actual grouting pressure exceeds the maximum allowed, the injection vent shall be closed and the grout shall be injected at the next vent that has been, or is ready to be closed, as long as a one-way flow is maintained. Grout shall not be injected into a succeeding vent from which grout has not yet flowed.

Grout shall be pumped through the duct and continuously wasted at the ejection vent until no visible signs of bleed water or air are ejected. A fluidity test shall be performed on each tendon.

The inlets shall be sealed off under pressure once the post tensioning duct is completely filled and all outlets have been closed. All vent, inlet and outlet tubes shall be elevated above the level of the tendon to where they are connected until the grout has hardened to help capture any entrapped air or bleed water.

The duct shall not be flushed with water under any circumstance such as, but not limited to, the removal of corrosion inhibitor and the clearing of a blockage.

Temperature

The temperature of the grout shall be 40°F or higher for three consecutive days from the time of grouting or until job-cured 2 in. cubes of grout reach a minimum compressive strength of 800 psi. Grouting shall only be performed when the ambient temperature is 40°F or higher and is not to fall below 40°F for the following three days. Grout shall not be above 90° during mixing or pumping.

Post-Grouting Inspection

All inspections shall be performed in the presence of IFA. Valves, caps and pipes at inlets and outlets shall not be removed or opened until the grout has set and cured for a minimum of 24 h. Also, the filled ducts shall not be subject to shock or vibration, nor shall any falsework be removed, within 24 h of grouting. Within 72 h of grouting, all inlets and outlets shall be opened to facilitate inspection. Inspection of the gout shall be performed within 1 h of opening the inlets and outlets.

All inlets, outlets, and anchorages shall be inspected to ensure complete filling with grout. Drilling equipment shall be capable of automatic shut-off when steel is encountered. All inlets and outlets shall be capped and sealed within 1 h of the completion of inspection.

Vacuum-grouting, when necessary, shall be completed within 120 h of inspection.

Frequency of Inspection

For longitudinal superstructure post tensioning ducts:

1. All inlets and outlets at anchors and post tensioning duct high points shall be inspected by drilling and probing with an endoscope to detect defects.
2. For bridges with more than 20 post tensioning ducts but where no duct is longer than 150 ft, all inlets and outlets at anchors and post tensioning duct high points shall be inspected by drilling and probing with an endoscope or probe until no defects are found in 20 consecutive post tensioning ducts. Thereafter, inspection may be reduced by 50%. If a defect is found, then the last five post tensioning ducts grouted shall be inspected and the next 20 consecutive post tensioning ducts shall be inspected before once again reducing frequency of inspection

to 50% if no voids are found. This cycle shall continue throughout all post tensioning duct grouting operations.

Drilled inspection holes that do not encounter voids shall be filled with grout or epoxy using an injection tube extending to the bottom of the drilled hole.

Incomplete Grouting

When any post tensioning duct grouting operation has been prematurely terminated before the ducts could be completely filled with grout, the post tensioning ducts shall be drilled into and explored for voided areas using an endoscope to determine the extent and volume of voids. Grout inlets and outlets shall be installed and the voids filled using volumetric measuring vacuum grouting equipment.

Vacuum grouting equipment shall include a device for measuring the volume of the voids so that the amount of grout injected can be checked against the anticipated amounts in order to give some assurance that the voids have been filled.

Unless otherwise approved by IFA, grout for vacuum grouting shall be the same as that used to grout the post tensioning ducts.

Grouting Report

A report on post tensioning duct grouting, inspection, vacuum grouting and sealing shall be provided from the Design-Build Contractor to IFA within 72 h of completing sealing. The post tensioning duct grouting report shall include the following:

1. Project contract number and structure number;
2. Identification of the post tensioning duct;
3. Date tendon was stressed;
4. Date grouted, including start and completion times;
5. Grout manufacturer name, lot number and bag number;
6. Number of days from stressing to grouting;
7. Type of grout;
8. Post tensioning ducts grouted in same grouting operation;
9. Injection end;
10. Applied grouting pressure;
11. Ratio of actual to theoretical quantity of grout;
12. Summary of any problems with grouting and corrective action taken;
13. Date of filling voids by vacuum grouting;
14. Estimated volume of voids measured during vacuum grouting process;
15. Quantity of grout injected by vacuum grouting;
16. Summary of any problems with vacuum grouting and corrective action taken;
17. Confirmation and date of sealing of inlets and outlets; and
18. Type of epoxy used to fill recesses containing sealed inlets and outlets.

Protection of Anchorages

The anchorages of post-tensioning bars and tendons shall be protected within seven days of the completion of grouting, and in accordance with section 14.0 of PTI/ASBI M50.3-12 Guide Specification for Grouted Post-Tensioning. All blockouts shall be filled with epoxy grout with material properties in accordance with this specification. The application of the elastomeric coating may be delayed by up to 45 days if approved by IFA. Substrate pulloff testing in accordance with ASTM C1583/C1583M shall be performed prior to installation of the epoxy grout. The test will be considered passing if the bond is capable of resisting at least 175 psi.

Basis of Item

The completed and accepted post-tensioned tendons shall be quantified by the lump sum.

The items list shall include the following:

Item No.	Item Description	Unit Symbol
707-01065	Post-Tensioning.....	LS

The following shall be considered incidental to this item:

Furnishing and stressing all temporary and permanent tendons, anchorage assemblies not embedded in the concrete, ducts and ducts supports not embedded in the concrete, steel deviation pipes, grouting, reinforcing bars required to resist local stresses imposed in the concrete by anchorage devices, anchorage protection, furnishing samples of materials and devices, testing of post-tensioning tendons, and for all labor, materials, tools, equipment and incidentals necessary for completing the Work in accordance with these Specifications.

ANTI-GRAFFITI COAT

Description

This Work shall consist of preparing surfaces and furnishing and applying anti-graffiti coating in accordance with 105.03 and as shown on the Design Documents.

Materials

The anti-graffiti coating shall be a sacrificial, wax-based emulsion type coating.

Construction Requirements

Prior to application, the Design-Build Contractor shall inspect all surfaces to be treated and correct all flaws in the substrate that would ultimately affect the performance or appearance of the anti-graffiti coating.

Surface preparation, method of application, application techniques, coating thickness, time of application, rate of application, temperature requirements for application and curing time for the anti-graffiti coating shall be in accordance with the written requirements of the manufacturer.

The Design-Build Contractor shall allow substrate to fully cure and newly coated surface to fully cure before application. Application shall be performed by an experienced applicator in accordance with the manufacturer's recommendations. The number of coats and coverage rates shall at no time be less than the manufacturers written requirements.

The Design-Build Contractor shall protect plants and vegetation from over-spray and adjoining surfaces that are not to have the anti-graffiti coating applied. The Design-Build Contractor shall protect the public in an area used by the public. The Design-Build Contractor shall comply with all federal, state, and local environmental restrictions.

The Design-Build Contractor shall apply surface seal in accordance with 709 prior to applying the anti-graffiti coating.

Basis of Item

Only those measurement necessary to verify application rates will be made; however, the Design Documents shall include the approximate square feet for information only.

The items list shall include the following:

Item No.	**Item Description**	**Unit Symbol**
709-0773	Anti-Graffiti Coat.....	LS

MODIFIED SURFACE SEAL

Description

This Work shall consist of preparing surfaces and applying a combination concrete stain and sealer in accordance with 105.03 and as described herein.

Materials

Modified surface seal shall consist of a material that stains and seals the concrete. The material shall provide an opaque appearance and the specular gloss in accordance with ASTM D 523 shall range from 8 to 20 at 60°. The material used shall be a water-based all-acrylic stain with VOC less than 150 grams per liter and shall contain no toxic heavy metals.

Acceptable products shall allow moisture and vapor transmission, be formulated for exterior application with resistance to freeze/thaw, moisture, alkali, acid and mildew, mold or fungus, discoloration or degradation, and meet the following requirements:

Water Vapor Transmission, ASTM D1653, Method B, Wet Cup:
5 Perms, Minimum
Scaling Resistance, ASTM C672, 50 cycles:
No scaling
Chloride Ion Penetration Resistance, AASHTO T259/T260:
1/16 in. to 1/2 in. deep, 75% minimum reduction in chloride ion migration as compared to an untreated sample
1/2 in. to 1 in. deep, 85% minimum reduction in chloride ion migration as compared to an untreated sample
ASTM G 153, Cycle 1, 2500 hrs:
No cracking, crazing or adhesive loss

Only one material shall be used at an individual location. It shall be delivered to the Project Site in undamaged sealed containers bearing the manufacturer's original labels. The manufacturer's brand name, date of manufacture, batch number, and color shall be clearly marked on each container. All material shall be from the same lot or batch unless otherwise authorized. A copy of the manufacturer's printed instructions shall be made available to INDOT upon request.

The material shall be stored in airtight, upright containers. The containers shall be stored in a dry enclosure where the temperature is kept in a temperature range as recommended by the manufacturer. Material which has been subjected to freezing will be rejected.

The stain material shall have a shelf life of not less than 12 months. The color of the applied stain material shall be in accordance with Red-Green-Blue variations. Such color shall match the color identification number shown on the Design Documents or in other special provisions.

All materials shall be furnished, prepared, applied, cured, and stored according to the product manufacturer's directions and as specified herein. Special attention shall be given to the recommended temperature range for application.

(a) Material Testing

The testing shall be performed by a recognized laboratory in accordance with ITM 806.

The applied material shall be subjected to and shall satisfy the

requirements of the tests listed above, prior to use.

(b) Certification

Before the stain is applied, a type B certification in accordance with 916 shall be furnished attesting that the commercial product furnished is in accordance with the same formula as that previously subject to the tests specified above and approved. Copies of the test reports shall be attached to the certification. Reports for tests made more than four years prior to shipment to the contract will not be accepted.

A service record shall be supplied which shows that the material has a satisfactory service record on concrete surfaces for a period of not less than five years prior to the date of submission of the service record. The coating shall also have shown satisfactory service characteristics without peeling, chipping, flaking, or non-uniform change in texture or color. A specific structure for the specific product shall be named for the service record.

Construction Requirements

Surface Preparation

The surfaces which are to receive the material shall be given a finish in accordance with 702.21. Air pockets of up to 1/4 in. in width and depth will not require grouting prior to application of the stain. Air pockets larger than 1/4 in. in width and depth shall be filled with a grout mix composed of one-part portland cement, two parts screened and washed sand graded to pass the No. 16 sieve with not more than 5% retained on the No. 30 sieve, and sufficient water to produce a thick liquid mix. The grout shall be applied to fill the air pockets and voids by using burlap pads, float sponges or other acceptable methods. As soon as the grout has taken its initial set, the surface shall be brushed to remove all loose grout, leaving the surface smooth and free of air pockets and voids.

Minor defects shall be finished to blend with the balance of the textured surfaces. Visible vertical or horizontal seams or conspicuous form marks shall be repaired to the satisfaction of IFA and at no additional cost to IFA. Prior to applying the material, regardless of whether the concrete surface has been previously sealed, the surface to be coated shall be water-blasted to remove flaking coatings, dirt, oil and other substances which could be deleterious to the application of the material. Sandblasting will not be allowed for cleaning concrete surfaces. Pressure washing with water at a pressure of 3000 psi at a rate of 3 to 4 gallons per minute using a fan nozzle held perpendicular to the surface at a distance of 12 in. to 24 in. shall be used. Overblasting, exposing additional air pockets, or disfiguring the surface shall be prevented. Final cleaning shall be done with compressed air. The air compressor shall be equipped with suitable separators, traps, or filters which shall remove water, oil, grease, or other substances from the air line.

Prior to applying the material, the surfaces shall have been prepared in accordance with the manufacturer’s recommendations and shall be in a condition consistent with the manufacturer’s requirements.

Surface Color

The material shall stain the concrete and provide an opaque appearance as shown on the Design Documents or other special provisions.

Application

The application, including equipment used, shall be in accordance with

the manufacturer's recommendations. The material shall be applied by qualified personnel experienced in the Work.

Enough coats of the material shall be used to attain an opaque appearance. The application of the material shall follow the surface preparation operations and be by air or airless sprayer. Each coat shall be allowed to thoroughly dry before applying additional coats. The final coat shall be applied in a uniform manner, moving in one direction. The application rates used shall be in accordance with the manufacturer's recommendations.

The Design-Build Contractor shall use sufficient material to provide color uniformity but avoid buildups and runs. The material shall be applied only when the ambient air and surface temperatures, humidity and dew point during application are in the ranges recommended by the manufacture. The material shall not be applied onto frozen surfaces or if rain is imminent. If rain occurs on a freshly applied surface, recoating may be required, at IFA's sole discretion, based on the extent of rain damage.

The material shall not be applied if dusty conditions exist in the vicinity of the surfaces to be coated. When dust conditions are beyond the control of the Design-Build Contractor, or are generated off-site, application shall not take place until more favorable conditions exist. The application of the modified surface seal shall be scheduled as one of the final finishing operations to minimize construction generated dust. A wet edge shall be maintained at all times to prevent lap marks. Stopping and starting in the middle of a section of concrete will not be allowed.

Finishing

The material shall be tightly bonded to the structure and walls to present a uniform color appearance accentuating the concrete texture. If necessary, additional coats shall be applied to produce the desired surface color uniformity. However, the additional coating thickness shall not diminish the appearance of the concrete texture.

The material shall be entirely removed from the structure and walls upon their failure to positively adhere without chipping, flaking or peeling, or attaining the desired surface color uniformity and concrete texture appearance. The material shall be reapplied after proper surface preparation until the desired finished product is achieved.

Appearance

The Design-Build Contractor shall apply the sealer and finish coat to a minimum 10 ft by 5 ft test area at the coverage rate recommended by the manufacturer. The test area shall include both horizontal and vertical surfaces and different concrete textures. The test areas shall demonstrate the coatings visual effects, including but not limited to, finish sheen, color and coverage rate.

Uniform appearance and the final color shall visually match the test section. Re-coating, removal, and re-application or other methods recommended by the manufacturer shall be performed to correct the final appearance.

Basis of Item

Only those measurements necessary to verify application rates will be made; however, the Design Documents shall include the approximate square feet for information only. This accepted quantities for this Work shall be in accordance with 709.08.

The following shall be considered incidental to this item:

Material, surface preparation, labor, and all other incidentals required for this Work shall be included in the lump sum of surface seal.

DISK BEARINGS

Description

This Work shall consist of designing, fabricating, and furnishing multi-rotational, high load disk bearings and installing disk bearing assemblies at the locations shown on the Design Documents in accordance with 105.03, the Indiana Design Manual, and the AASHTO LRFD Bridge Design and Construction Specifications, and as described herein.

Materials

Disk bearings shall consist of a polyether urethane structural element, disk, confined by upper and lower steel bearing plates. The bearing shall be equipped with a shear resisting mechanism, positive location device, or both, to prevent lateral movement of the disk. Bearings shall adequately provide for thermal expansion and contraction, rotation, camber changes, and creep and shrinkage of structural members, where applicable. Bearing assemblies shall include the bearing device, distribution plates, distribution pads, and connection hardware.

Disk bearings shall be supplied as fixed bearings; guided expansion bearings; non-guided expansion bearings; and uplift bearings as designated by the Design Documents. Disk bearings may be used as an alternate to a pot bearing.

All materials shall be new and unused, with no reclaimed material incorporated in the finished bearing.

The physical properties of the polyether urethane elements shall be in accordance with AASHTO LRFD Bridge Construction Specifications, Table 18.3.2.8-1.

All steel except stainless steel components of the bearing shall conform to the requirements of the type of steel designated on the contract Design Documents.

Stainless steel shall conform to the requirements of ASTM A240 – Type 304. Higher grades of stainless steel are permissible. Stainless steel in contact with the polytetrafluoroethylene, PTFE, Sheet shall be polished to a bright mirror finish, less than 20 micro-inches root mean square. The minimum thickness of the stainless steel shall be 0.063 in.

The PTFE sheet shall be manufactured from pure virgin, not reprocessed, PTFE resin. The PTFE sheet shall meet the applicable material requirements of AASHTO LRFD Bridge Construction Specifications, Section 18.8.2. The finished PTFE sheet shall be resistant to all acids, alkalis, and petroleum products, stable at temperatures from -360°F to +500°F, non-flammable, and non-absorbing of water. The minimum thickness of the PTFE sheet shall be 0.188 in.

The elastomeric rotational element shall be molded as a single piece. Separate layers are not allowed.

General Design Requirements

The Design-Build Contractor shall provide disk bearings for the loads and movements shown on the Design Documents. However, the Design-Build Contractor shall use the anchor rod size, length, spacing and masonry plate thickness as shown on the Design Documents and provide an overall height of the bearing assembly that is at least the height shown on the contract Design Documents,

but no more than 1/8 in. greater than this height. Otherwise, bearing seat elevations as shown on the Design Documents will need to be revised.

Qualification Requirements

Disk bearings and the bearing supplier shall be subject to the qualification requirements for acceptance listed below.

Disk bearings shall be designed and constructed in accordance with AASHTO LRFD Bridge Design Specifications 4th Edition, Section 14, and AASHTO LRFD Bridge Construction Specifications 2nd Edition, Section 18.

The supplier shall show previous history in the design and fabrication of disk bearings. Documentation showing a minimum of five years' experience and 10 bridge installations shall be provided to IFA.

Sliding bearings shall be stiff in shear. Negligible shear displacements shall occur within the vertical load support element.

The vertical load support element, elastomeric disk shall be designed for rotational fatigue at the design vertical load. Rotational loading shall be static dead load rotation plus cyclic live load rotation. Unless otherwise specified, the minimum number of cyclic design rotations shall be 5 million. Bearings that rely upon lateral confinement of the elastomer to sustain the vertical load shall simultaneously include 1/2 the design horizontal load. In lieu of long term testing, accelerated rotational fatigue life testing may be performed with 15,000 complete cycles at +/- 0.02 radians on a minimum of 3 full size bearings. Rotational fatigue test results shall be provided to IFA.

Submittals

The Design-Build Contractor shall submit eight copies of drawings and calculations to IFA for review and shall have received acceptance prior to constructing the girder seats and fabrication of disk bearings. These drawings shall include, but not be limited to, the following information:

(1) Plan and elevation of each disk bearing size.
(2) Complete details and sections showing all materials, with ASTM or other designations, incorporated in the disk bearings.
(3) Vertical and horizontal load capacities.
(4) Bearing seat and all bearing connection details.

The Working Drawings and calculations shall be stamped by a Registered Professional Engineer from the State of Indiana and shall be employed by the bearing supplier with at least five years of documented history of disk bearing design experience.

Fabrication

The Design-Build Contractor shall provide IFA with written notification 30 days prior to the start of bearing fabrication. The bearing fabricator shall be certified by the American Institute of Steel Construction, AISC, for Simple Steel Bridges Category.

All steel surfaces exposed to the atmosphere, except stainless steel surfaces and metal surfaces to be welded, shall be shop coated in accordance with the Design Documents. Prior to coating, the exposed steel surfaces shall be cleaned in accordance with the recommendations of the coating's manufacturer. Metal surfaces to be welded shall be given a coat of clear lacquer, or other protective coating approved by IFA. The coating shall be removed at the time of

welding. No painting shall be done to these surfaces prior to completing welding.

Stainless steel sheet shall be attached to its steel substrate with a continuous seal weld.

All welding shall conform to, and all welders shall be qualified in accordance with, the requirements of the American Welding Society, AWS.

Except as noted, all bearing surfaces of steel plates shall be finished or machined flat within 0.010 in./ft. Out-of-flatness greater than 0.010 in./ft on any plate shall be cause for rejection. The bottom surfaces of lower bearing plates, masonry plates, designed to rest on bearing pads shall not exceed an out-of-flatness value of 0.0625 in./ft. Oxygen cut surfaces shall not exceed a surface roughness value of 1000 micro-inches as defined by ANSI B46.1.

Gross bearing dimensions shall have a tolerance of −0, + 1/8 in.

Every bearing shall have the project identification number, lot number, and individual bearing number indelibly marked with ink on a side that will be visible after erection.

After assembly, including sole plates and masonry plates, bearing components shall be held together with steel strapping or other means, to prevent disassembly until the time of installation. Packaging shall be adequate to prevent damage from impact as well as from dust and moisture contamination during shipping and storage.

Sampling and Testing

Production bearing sampling and testing shall be performed in accordance with AASHTO LRFD Bridge Construction Specifications, Section 18.3.4.

Each bearing shall be visually examined both during and after testing. Any resultant defects, such as bond failure, physical destruction or cold flow of PTFE to the point of debonding, shall be cause for rejection. Defects such as extruded or deformed elastomer or cracked steel shall also be cause for rejection.

Construction Requirements

Installation

Bearings delivered to the bridge site shall be stored under cover on a platform above the ground surface. Bearings shall be protected at all times from damage. When placed, bearings shall be dry, clean, and free from dirt, oil, grease, or other foreign substances.

Bearing devices shall not be disassembled unless otherwise allowed by IFA or the manufacturer.

Bearings shall be installed in accordance with the alignment plan and installation scheme as shown on the Design Documents. Upon final installation of the bearings, IFA, in the presence of the manufacturer’s representative if required, shall inspect the bearing components to assure that they are level and parallel to with ± 0.005 radians. Any deviations in excess of the allowed tolerances shall be corrected.

Bearings assemblies shall be handled by their bottom surfaces only and shall not lifted by their tops, sides or shipping bands.

Caution shall be taken to ensure that the steel temperature directly adjacent to the polyether urethane rotational element does not exceed 225°F. The polyether urethane disk shall not be exposed to direct flame or sparks.

Certificate of Compliance

In addition to records of test results, the Design-Build Contractor's disk bearing supplier shall submit Certificates of Compliance for the disk bearings indicating the materials, fabrication, testing, and installation are as specified herein.

Basis of Item

Disk Bearings fabricated and installed shall be quantified per each and shall be defined as one complete bearing assembly including anchor bolts, masonry plate, steel sole plate, bearing device, distribution plates, distribution pads, connection hardware and any incidental material needed to complete the Work.

The items list shall include the following:

Item No.	Item Description	Unit Symbol
707-10188	High Load Multi-Rotational Bearings, Guided.....	Each
707-10188	High Load Multi-Rotational Bearings, Fixed.....	Each
707-10188	High Load Multi-Rotational Bearings, Guided, Uplift...	Each

The following shall be considered incidental to this item:

Furnishing all labor, materials, tools, equipment and incidentals required to complete the Work in accordance with the Standard Specifications, this Special Provision, the manufacturer's requirements and as directed by IFA.

WATERWAY MAINTENANCE OF TRAFFIC

SECTION 801.03, BEGIN LINE 160, INSERT AS FOLLOWS:

The Design-Build Contractor shall provide a line of buoys 200 feet upstream and downstream of the I-465 over White River bridges to warn boats or other water craft of the work zone. The buoys on these lines shall have a maximum spacing of 30 ft. Each buoy line shall be equipped with two Type D Construction Signs stating "Caution in-Channel Restrictions and Overhead Work Ahead" to be located near the opening in the temporary causeway. The Design Build Contractor shall provide a safe channel for watercraft to pass through the work zone and opening in the temporary causeway. The channel shall be a minimum of 12 ft wide and shall be delineated with buoys spaced at 10 ft maximum spacing. The Design Build Contractor shall provide signing at the entrance to the channel and on each side of the channel noting the location of the channel. The signing shall state "Channel Thru Work Zone" and provide directional arrows. With approval from IFA, the Design-Build Contractor may close the channel to watercraft during operations to ensure the safety of the public. All buoys shall conform to 312 IAC 5-4. The buoys shall be equipped with Type "A" construction warning lights. Any equipment operated within the limits of the waterway shall be equipped with Type "A" construction warning lights.

The buoy lines shall be in place prior to any in-channel work and shall be maintained and left in place until the work is completed.

SECTION 801.17, BEGIN LINE 914, INSERT AS FOLLOWS:

Buoy lines, Type D construction signs used to delineate the buoy line, channel delineation and channel signing shall not be quantified.

SECTION 801.18, BEGIN LINE 914, INSERT AS FOLLOWS:

The furnishing, placing, moving, removal and maintenance of buoy lines, and signing and warning lights used to delineate a buoy line shall be considered incidental to Maintaining Traffic.

ARTICULATED CONCRETE BLOCK

Description

This Work shall consist of furnishing and installing a precast articulated concrete block revetment system in accordance with 105.03.

Materials

Materials shall be in accordance with the following:

Geotextiles..... 918.02
Concrete Block..... ASTM D6684-04
Cable and Fittings..... ASTM D6684-04

The Design-Build Contractor shall utilize a precast articulated concrete block system. This shall be a system of concrete blocks laterally and longitudinally cabled into a prefabricated mat placed over geotextile. The blocks may also be longitudinally cabled together with a side pattern for interlocking with an adjacent row of blocks. The system shall consist of all open cells. Open cell systems shall have a minimum of 15% open area.

Concrete block shall be manufactured by a certified precast concrete producer.

A type "A" certification in accordance with 916 shall be provided for the precast articulated concrete block system. The certification shall include the following tests and results:

The precast concrete blocks shall have a minimum compressive strength of 4000 psi for an average of three units. Water absorption shall be limited to a maximum 9.1 lbs/cu ft. for an average of 3 units. Units shall be sampled and tested in accordance with ASTM D6684-04, Standard Specification for Materials and Manufacture of Articulating Concrete Block Revetment Systems.

Cables and fittings shall be as recommended by the manufacturer and shall meet the following criteria:

In cable-tied ACBR systems, the cables shall be stainless steel, galvanized steel, or polyester. Selection of cable and fittings shall be in accordance with ASTM D6684-04.

A type "A" Certification in accordance with 916 shall be provided for the cable used to connect concrete blocks prior to installation.

Soil anchor stakes for the Articulated Concrete Block system shall be in accordance with the manufacturer's recommendations. A type "C" certification in accordance with 916 shall be provided for soil anchors prior to installation. The certification shall state that the soil anchor stakes meet the testing requirements set out in the Articulated Concrete Block system manufacturer's recommendations.

Submittals

The Design-Build Contractor shall submit the following information to IFA at least 21 days prior to commencing Articulated Concrete Block system construction:

(a) Type and source of the selected Articulated Concrete Block system
(b) Type and source of cables and fittings
(c) Type and source of anchor system

(d) Construction method and sequence
(e) A copy of the articulated concrete manufacturer's specifications and literature including material and installation recommendations and instructions.
(f) Working and installation drawings, stamped by a professional engineer, specific for the project for the fabrication of the Articulated Concrete Block system, and installation recommendations, as applicable, specifically related to the project.

Construction Requirements

Excavation for the Articulated Concrete Block system shall be as shown on the Plans and in accordance with 203. Excavation for blocks toed in for anchors shall be made to the neat lines as shown on the plans.

Geotextile fabric shall be placed in accordance with 616.11 on the subgrade prior to placing the Articulated Concrete Block system.

Articulated Concrete Block systems shall be placed side by side, fastened together and anchored to provide one homogeneous erosion protection system. The mats shall arrive at the jobsite assembled according to lengths and widths as specified on the working drawings.

Basis of Item

Articulated Concrete Block will fabricated and installed shall be quantified per square yard and shall be defined by the finished surface area, including the area occupied by courses used as toed-in anchors, complete in place.

The items list shall include the following:

Item No.	**Item Description**	**Unit Symbol**
621-09815	Articulated Concrete Block.....	SYS

The following shall be considered incidental to this item:

The design, testing, grading, furnishing of all labor, materials, equipment and incidentals required to complete the Work in accordance with the Standard Specification, this Special Provision, the manufacturer's requirements and as directed by IFA.

LIMITING MOVEMENT CRITERIA FOR PERMANENT EARTH RETENTION SYSTEM FOR CUT-WALL APPLICATION

The Design-Build Contractor shall limit maximum lateral wall movements during and following construction of the cut-wall to 1.0 percent of the excavation depth that is shown on the Plans.

The Design-Build Contractor shall limit maximum settlement of the ground behind the cut-wall during and following construction of the wall to less than 0.5-inch.

If these limits are exceeded, the Design-Build Contractor shall submit in writing to the IFA for approval a plan of corrective measures to prevent or limit all additional movement or settlement. The plan of corrective measures shall be implemented upon written approval by IFA.

TEMPORARY CAUSEWAY

Description

This Work shall consist of furnishing, installing, and maintaining a temporary causeway in accordance with 105.03.

The temporary causeway shall be part of the temporary erosion control plan and shall be constructed with the other temporary erosion control measures in accordance with 205.

Materials

Materials shall be in accordance with 205.02 and 908.02.

Construction Requirements

The Design-Build Contractor may use an alternate method for the river Work as shown on the Plans, pending the approval of IFA.

The Design-Build Contractor shall make the appropriate permit amendments for selected method.

The Design-Build Contractor shall install one "Authorized Vehicles Only" sign (R5-11) and one "No Pedestrians" sign (R5-10c) at each end of the temporary causeway.

A minimum 12 ft opening in the temporary causeway shall be maintained at all times.

The Design-Build Contractor shall coordinate with IDNR to determine when the temporary causeway may be constructed in the White River.

The erosion and sediment control measures adjacent to the river area shall be installed prior to construction of the temporary causeway. All work shall stay within the construction limits. Disturbance within the construction limits shall be minimized.

Work shall not be conducted during rain events.

Temporary pipe thickness shall be per 713.05.

Maintenance and Inspection

The temporary causeway shall be inspected within 24 hours of each rainfall event and at least once every seven calendar days. All damage shall be repaired immediately.

Removal

Temporary causeway shall be removed after construction in the river is complete and permanent erosion control features have been established. Any areas disturbed by the temporary causeway shall be returned to their original condition and re-vegetated as needed.

Basis of Item

Temporary Causeway shall be quantified as a lump sum.

The items list shall include the following:

Item No.	Item Description	Unit Symbol
713-04331	Temporary Causeway.....	LS

The following shall be considered incidental to this item:

All design, coordination, permit addendums, materials, installation and removal, maintenance, and all necessary incidentals for the causeway.

The “Authorized Vehicles Only” sign (R5-11) and “No Pedestrians” sign (R5-10c) shall be quantified as part of Construction Sign, B.

PUMP-AROUND

Description

This work shall consist of furnishing, installing, and maintaining a pump-around in accordance with 105.03.

The pump-around shall be part of the temporary erosion control plan and shall be constructed with the other temporary erosion control measures in accordance with 205.

Materials

Materials shall be in accordance with 205.02.

Construction Requirements

The Design-Build Contractor may use an alternate method for the channel work as shown on the plans, pending the approval of IFA. If an alternate method is proposed, the Design-Build Contractor shall make the appropriate permit application or amendment.

Traversing the channel with equipment within the work area where no work is proposed shall be avoided. If equipment is required to traverse such a reach for access to another area, timber mats or similar measures shall be used to minimize disturbance to the channel. A temporary channel crossing shall be used only when necessary and as approved.

The erosion and sediment control measures adjacent to the channel area shall be installed before construction of the pump-around can begin. All work shall stay within the construction limits. Disturbance within that area shall be minimized.

Work shall not be conducted during rain events.

Pump-Around

The pump-around shall be in accordance with the following:

Dewatering of the channel shall be performed by using a mechanical pump. The intake suction hose shall be floated as long as possible to prevent the pump from pulling sediment from the bottom of the pooled area.

Dikes shall be installed at the upstream and downstream ends of the work area as shown in the details, and the channel flow shall be pumped around the work area. The pump shall discharge onto a stable velocity dissipater consisting of riprap or sandbags or other approved equal medium.

Water trapped within the work area shall be pumped to a sediment filtering measure such as a dewatering basin, sediment bag, or other approved device. The sediment filtering measure shall be located such that the water drains back into a stabilized area and into the channel below the downstream dike.

Dewatering Filter Bag

A dewatering filter bag shall be securely connected to the end of the discharge hose.

The dewatering bag shall be a single-use or reusable type of bag and shall be constructed of non-woven, polypropylene geotextile material. The bag shall have the following minimum specifications:

Permittivity – 1.4 sec-1

Grab Tensile – 205 lbs
Weight – 8 oz/sys
Apparent Opening Size – 80 US Sieve

The dewatering bag shall be placed on a flat surface and on riprap or sandbags to help increase the flow through the dewatering bag and help dissipate the velocity.

Water shall be pumped from the channeled area at a rate not to exceed the maximum manufacturer's recommended flow rate of the dewatering bag.

Dewatering bags shall be placed in a location in which runoff from the bag will pass through additional sediment control measures prior to leaving the site.

Following the completion of the dewatering, the sediment accumulated within the dewatering bag shall be removed from the bag and placed in an upland area.

Maintenance and Inspection

The diversion measures shall be inspected within 24 hours of each rainfall event and at least once every seven calendar days. The sediment and debris from the channel or upstream clean water dike shall be removed. The dikes shall be repaired as needed. All outlets shall be checked and repaired as needed to prevent washouts. The dewatering filter bag shall be checked and cleaned.

Removal

Pump-around shall be removed after construction in the main channel is complete and permanent erosion control features have been established. Any areas disturbed by the pump-around measures shall be returned to their original condition and re-vegetated as needed.

Basis of Item

Pump-around will be quantified for at the contract unit price per each.

The items list shall include the following:

Item No.	Item Description	Unit Symbol
205-11626	Pump-Around.....	EACH

The following is considered incidental to this item:

Furnishing all materials, equipment, labor, installation, maintenance, and removal required for dewatering and operation of the temporary pump-around.

Temporary channel crossings if required.

SECTION 620, BEGIN LINE 1, DELETE AND INSERT AS FOLLOWS:

SECTION 620 – ~~BLANK~~ *SOUND BARRIER SYSTEMS*

620.01 Description

This Work shall consist of furnishing materials and placing of a sound barrier system and a coping in accordance with 105.03.

620.02 General Design Requirements

The sound barrier system shall be either wall mounted, bridge mounted or ground mounted, and shall consist of wall attachments or post foundations, vertical support posts, and sound barrier panels. For the purposes of this section, "panel" is defined as the reflective or absorptive component mounted between the posts, piers or columns.

All appurtenances behind, in front of, under, over, mounted upon, or passing through the wall, including drainage structures, fire hydrant access openings, highway signage, emergency access openings, utilities or other appurtenances shown on the Plans, shall be accounted for in the design of the sound barrier system.

See the Plans for locations and details regarding access doors in the sound barrier. Access doors for wall mounted sound barrier shall only swing outward, away from the roadway.

If the sound barrier manufacturer needs additional information to complete the design, the Design-Build Contractor shall be responsible for obtaining such information. The Design-Build Contractor shall be responsible for field verifying wall locations in areas of all existing traffic poles, utility poles, roadway lighting poles, drainage pipes, underdrain outlets, and bridge expansion joints and all other locations where the sound barrier system may conflict with existing conditions.

The wall shall be realigned and designed to box out openings where conflicts occur with existing light poles and traffic control devices. The Design-Build Contractor shall establish and account for the existing locations of all underdrain outlets, drainage pipes, and bridge expansion joints in the final wall plans. If the Design-Build Contractor discovers that overhead utilities will be within 6 ft of the sound barrier, the Design-Build Contractor shall notify IFA in accordance with 104.02 and 105.16.

The sound barrier wall design shall follow the general dimensions of the wall envelope as shown on the plans. The top of the sound barrier shall be at or above the acoustical profile line shown, unless otherwise noted on the plans. Changes in elevation shall be accomplished by stepping the sound barrier sections at the vertical support posts. Steps shall not exceed 3 ft vertically unless otherwise specified on the plans. Barrier heights shall be selected in groups of no fewer than three successive panels, except where barriers are to be stepped down for barrier termination. ~~*The ends of the sound barrier shall be tapered or stepped down to a height of 8 ft within the sound barrier end transitions or as shown on the plans.*~~ *The bottom of ground mounted sound barrier shall be embedded a minimum of 6 in. into the ground. The bottom of wall mounted or bridge mounted sound barrier shall follow within 3 in. a profile 6 in. below the top of the*

existing concrete barrier railing or wall.

Caisson footings, vertical support posts, and connections for ground mounted sound barrier shall be designed as specified by the manufacturer, with minimum post spacing of 15 ft. Exceptions will be allowed due to site-specific conditions such as access doors, drainage requirements or utility accommodations. These shall be reviewed and approved through the working drawing process. The foundation design shall use the COM 624P or LPILE Program. The foundation design shall be based on the soil model shown on the plans based on cyclic loading and shall consider the effects of a sloping ground surface. The post deflection shall be limited to L/100, measured from the top of the caisson to the top of the wall. The foundation depth shall not be less than 7.5 ft and shall not exceed the depth of the soil model except where the Design-Build Contractor elects to drill deeper borings to extend the model. The foundation diameter shall not be less than 18 in. and shall not be less than 6 in. larger than the diagonal dimension of the post being used. The foundation shall be designed by the sound barrier manufacturer. Vertical support posts shall be attached to caisson footings by means of anchor bolts, or embedded wide flange steel posts.

A sound barrier system shall be selected for the type specified from those which are on the INDOT's list of approved Sound Barrier Systems. The materials used in the sound barrier system shall be the same as those used for approval of the sound barrier system.

The structural design of the sound barrier system shall be in accordance ~~with the AASHTO LRFD Bridge Design Specifications for Structural Design of Sound Barriers,~~ with AASHTO LRFD Bridge Design Specifications 8th Edition (2017), Chapter 15, except as otherwise directed by the IFA. The sound barrier system shall be designed to withstand wind pressure ~~as shown on the plans, as applied perpendicular to the barrier, in each direction.~~ per AASHTO LRFD Bridge Design Specifications 8th Edition (2017), Section 15.8.2.

The post spacing for sound barriers mounted on any structure or safety barrier shall be limited to a distance that does not overstress the existing structure or safety barrier. The spacing shall also be limited to a distance that allows the sound barrier to conform to the existing horizontal and vertical alignments. ~~The allowable loads on a structure or barrier will be shown on the plans. If no allowable loads are shown, the Contractor shall contact the project designer for this information.~~ The allowable loads on a structure shall be as shown on the plans. The allowable loads on a ~~or~~ sound barrier shall be in accordance with AASHTO LRFD Bridge Design Specifications 8th Edition (2017), Chapter 15. Sound Barrier that is protected by guardrail or concrete traffic barrier, as shown on the Plans, need not be designed for vehicular collision forces. Any deviation of wall locations from what is shown on the plans shall require the approval from IFA for this design deviation to remain valid.

When sound barriers are to be installed on a bridge structure, design calculations shall be completed to demonstrate the structure loading limits will not be exceeded.

All materials shall have a minimum predicted maintenance free structural and acoustical lifespan of 20 years. All colorings and coatings shall have a minimum predicted maintenance free lifespan of 10 years.

The types of acoustic sound barrier systems that are accepted are as follows:

Type 1, single sided absorptive, sound barrier systems and their components shall be designed to achieve a sound transmission loss equal to or greater than 20 decibels at all frequencies when tested in accordance with ASTM E 90. Type 1 sound barrier systems shall be designed to have a minimum noise reduction coefficient of 0.70 on the roadway side. Type 1 sound barrier systems shall be tested in accordance with ASTM C 423. Material samples for this test shall be provided with the coating applied, so as to determine that the color coating does not inhibit the acoustic performance. The sample shall be mounted in accordance with ASTM E 795, type A.

Type 2, double-sided absorptive, sound barrier systems and their components shall be designed to achieve a sound transmission loss equal to or greater than 20 decibels at all frequencies when tested in accordance with ASTM E 90. Type 2 sound barrier systems shall be designed to have a minimum noise reduction coefficient of 0.70 on the roadway and non- roadway sides. Type 2 sound barrier systems shall be tested in accordance with ASTM C 423. To determine that the color coating does not inhibit the acoustic performance, material samples for this test shall be provided with the coating applied. The sample shall be mounted in accordance with ASTM E 795, type A.

A type 2 barrier system may be substituted for a type 1 barrier system at the Design-Build Contractor's discretion.

All molded finishes shall have 1 in. minimum relief. All rolled finishes shall have a minimum 3/4 in. relief. Relief is defined by material that is provided in excess of the minimum wall thickness required to meet the noise reduction coefficient required for the absorptive surfaces. Fluted finishes shall be coped at each end to avoid cracking.

Corrugations, ribs, or battens on sound barrier panels shall be oriented vertically when erected. The sound barrier shall be designed to prevent entrapment and ponding of water. The sound barrier shall not be designed with openings promoting the perching or nesting of birds, or the collection of dirt, debris, or water. The sound barrier shall not be designed with hand holds or grips promoting scaling or climbing of the system.

Fire hydrant access points shall be designed with additional reinforcement or bracing and protective coating around the opening as necessary to maintain structural integrity.

Closure plates shall be provided where new sound barrier is constructed adjacent to existing sound barrier. Where bridge mounted walls cross over expansion joints, expansion closure plates shall be used. The wall manufacturer shall provide expansion closure plates for each expansion joint unless directed otherwise by IFA. The minimum thickness of closure plates shall be 3/16 in.

The calculations for sound barriers which also retain earth must show that the walls are adequate for earth retention. The earth retention areas shall be shown on the Plans. The exposed face of the sound barrier earth retaining panel will match the adjacent panel's color and texture.

(a) Precast Panel Design Criteria

Base-plated or embedded reinforced precast concrete posts may be substituted for wide flanged steel posts with the approval of IFA. Proposed substitutions for wide flanged steel posts shall be shown on working drawings submitted for approval.

Support posts shall have color as shown on the plans. Embedded reinforced precast concrete posts must also match the adjoining wall in texture. Sound barrier systems utilizing stacked panels shall have ship-lapped or tongue and groove horizontal joints or other approved design which blocks the passage of light.

(b) Aesthetic Criteria

Sound barriers shall meet the following aesthetic requirements:

Sound barrier panel texture requirements:

Roadway and non-roadway side top panel – 12-inch-high smooth band.

Roadway side – split-face random ashlar texture. Face shall be cast and not stamped or impressed.

Non-roadway side – textures shall be determined in accordance with 620.03

Sound barrier color requirements:

1) *Roadway side panels (including top of top panel) – light tan (SAE-AMS-STD-595, color No. 37769).*

Roadway side galvanized steel posts – light tan (SAE-AMS-STD-595, color No. 37769).

Non-roadway side panels – colors shall be determined in accordance with RSP 620.03

Non-roadway side galvanized steel posts – color shall match selected panel color as determined in accordance with RSP 620.03.

(c) ***Masonry Design Criteria***

Reinforced masonry vertical support posts shall be faced to have color as shown on the Plans.

Steel support posts shall have color as shown on the Plans.

620.03 Submittals

The Design-Build Contractor shall submit a minimum of three alternative textured finishes for the residential side of the wall to IFA. These shall include the following colors:

(a) Light gray (SAE-AMS STD 595, color No. 36492),
(b) Light brown (SAE-AMS STD 595, color No. 30450),
(c) Light tan (SAE-AMS STD 595, color No. 37769).

The colors will be presented to the public for their input in accordance with 620.05. The final wall pattern and color will be approved before production of the wall panels may begin.

The Design-Build Contractor shall submit design calculations in accordance with 105.02. Calculations for sound barriers on bridge structures shall include an analysis of the bridge structure that demonstrates the additional loads imposed by the sound barrier, including dead

load and wind load, will not exceed the structural capacity of the bridge. The Design-Build Contractor shall submit Working Drawings in accordance with 105.02 after design calculations are approved and before beginning wall construction operations. Design calculations and Working Drawings shall meet the following minimum requirements:

(a) Design calculations shall include all structural design calculations and vertical support post design calculations.

(b) Design calculations for bridge mounted installations shall include the design unit weight and mass of the sound barrier and support systems.

(c) Design calculations for bridge mounted installations shall demonstrate that the structural loading limits of the structure, as shown on the Plans, will not be exceeded.

(d) Working Drawings shall include all details, dimensions, quantities, and cross sections necessary to construct the sound barrier systems and shall include, but not be limited to, the following:

1. A plan and elevation sheet or sheets for each sound barrier systems location.

2. An elevation view of the sound barrier systems which shall include the elevation at the top of the wall at all horizontal and vertical break points at least every 50 ft along the face of the wall.

3. A plan view of the wall that indicates the offsets from the construction centerline to the face of the wall at all changes in horizontal alignment. A plan view and elevation view which detail the placing position.

4. A typical cross section or cross sections showing elevation relationship between ground conditions and the sound barrier systems locations.

5. All general notes required for constructing the wall.

6. Each sheet shall show the complete project identification number.

7. All horizontal and vertical curve data affecting the wall.

8. A listing of the summary of quantities on the elevation sheet for each wall.

9. A list of manufacturer's recommendations with respect to maintenance, including repair of graffiti and other damages.

10. Typical sections and elevation views for bridge mounted installations.

(e) Working Drawings shall include a detailed plan of aesthetic treatment for the entire sound barrier system, manufacturer-recommended installation requirements and sequence of

construction, manufacturer-recommended repair requirements for damage caused by vandalism or graffiti prior to final acceptance, and a detailed bill of materials.

620.04 Materials

Materials shall be in accordance with the following:

Cast-in-Place Portland Cement Concrete, Class A 702
Coarse Aggregate, Class A or Higher, Size No. 91 904
Coarse Aggregate, Class D or Higher, Size No. 5.....904
Coarse Aggregate, Class D or Higher, Size No. 8.....904
Concrete Masonry Units 905.06
Fine Aggregate, Size No. 23.....904
Joint Mortar 901.08, 907.12
Paint 909.02
Portland Cement .....901.01(b)
Precast Concrete.....707
Reinforcing Bars 910.01
Structural Aluminum Posts .....910.14(d)
Structural Steel.....910
Water 913.01

Steel structural components shall be in accordance with ASTM A 36. Structural steel components shall be hot dipped galvanized in accordance with ASTM A 123, coating grade 100 or painted in accordance with 619.11 and 619.12. Exposed surfaces of galvanized components shall be coated in accordance with 619.09(b). The galvanized surfaces shall be prepared using a light brush-off blast cleaning in accordance with SSPC-SP 16. The surface profile shall be 15 to 30 microns in accordance with ASTM D 4417, prior to painting.

All structural steel hardware shall be in accordance with ASTM F 3125, grade A 325 and shall be hot dipped galvanized in accordance with ASTM A 153 or shall be made of nonferrous material or stainless steel. All other non-structural fastening devices shall be made of nonferrous metal or stainless steel. Plastic members shall be connected with either screws or bolts. Aluminum members shall be connected with stainless steel fasteners. Anchor bolts shall be of the size shown with a minimum of 10 in. of 7NC threads on the upper end. Anchor bolts shall be in accordance with ASTM F 1554. The threads, nuts, and washers shall be galvanized in accordance with ASTM A 153 or be mechanically galvanized and conform to the coating thickness, adherence, and quality requirements of ASTM A 153, where required.

Solid portland cement concrete or composite concrete shall be coated or contain an integral pigment, as specified by the manufacturer, and shall meet the specified color requirements. Integral pigment shall be certified to be in accordance with ASTM C 979. The coating shall be tested for accelerated weathering in accordance with ASTM D 6695. The test panel substrate shall be of the same portland cement concrete or composite concrete material used in the sound barrier system component. Cured coating or integral pigment shall not contain heavy metals that exceed the requirements of 40 CFR 261.24.

Concrete class A for the coping shall be in accordance with the applicable requirements of 702, except the coarse aggregate for pre-cast units may be size No. 91 in accordance with 904. Reinforcing steel in the coping shall be in accordance with the applicable requirements of 703. The coping may be precast or cast-in-place.

Masonry block shall be tested in accordance with ASTM C 90 and as follows:

a. *The average compressive strength of 3 units shall be a minimum of 3,000 psi with no single unit being less than 2,700 psi.*

b. *The units shall be tested for water absorption in accordance with ASTM C 140. The maximum absorption shall be 7%.*

c. *Joint reinforcement for masonry block systems shall be in accordance with ASTM A 951.*

d. *Mortar for masonry block systems shall be in accordance with ASTM C 270; type S, Table 1 proportion requirements.*

e. *Portland cement-lime or mortar cement may be used. Masonry cement shall not be used. Grout for masonry shall be in accordance with ASTM C 476.*

f. *Aggregate for masonry grout shall be in accordance with ASTM C 404.*

Masonry blocks shall be coated or contain an integral pigment, as specified by the manufacturer, and shall meet the specified color requirements. The integral pigment shall be certified to be in accordance with ASTM C 979. The coating shall be tested for Accelerated Weathering in accordance with ASTM D 6695. The test panel substrate shall be of the same masonry blocks used in the sound barrier system component. Cured coating or integral pigment shall not contain heavy metals that exceed the requirements of 40 CFR 261.24.

Certifications shall be provided for each of the materials to be supplied for the sound barrier system. Certifications shall be in accordance with a type C in accordance with 916, unless noted otherwise. A type A certification in accordance with 916 shall be provided for compressive strength and absorption test values for masonry block, sampled and tested in accordance with ASTM C 140. All test reports required to substantiate compliance shall be in accordance with the test method/material requirements cited herein. An INDOT approved laboratory shall conduct the testing.

620.05 Information for Public Input

Colored flyers with appropriate graphics shall be developed by the Design-Build Contractor and furnished to IFA.

Wall color photos shall be provided for each color in accordance with 620.03 along with photos of each available texture alternative. A minimum of three wall samples of the non-roadway side textures shall be provided. All samples of the wall textures shall be a minimum of 3 sq ft in area, with a distinguishable pattern.

Based on comments received, IFA will select the final finishes and colors for each wall. Each wall shall have the selected color used throughout the entire wall on the ~~roadway and the~~ non-roadway sides. The Design-Build Contractor shall propose approach process for patterns and color options to IFA for approval.

620.06 Construction Requirements

Sound barrier components shall not be stored on the right-of-way unless written permission is given by IFA. Requests for permission to store materials on the right- of-way will not be accepted until after the contract has been awarded.

The sound barrier supplier shall provide technical instruction, guidance in preconstruction activities including the preconstruction conference, and on-site technical assistance during construction. The Design-Build Contractor is responsible for following installing instructions from the supplier unless otherwise directed in writing by IFA.

Clearing and grading shall be in accordance with 201 and 202, as required.

The foundations for ground mounted sound barrier systems shall be constructed as shown on the working drawings. Holes for footings shall be drained of free water prior to installing any components. Placing concrete shall be in accordance with 702.

The integrity of the sound barrier system continuity shall be such that no light will be visible through any vertical joint between sound barrier panels and vertical support posts, through any horizontal joints between sound barrier panels, between the bottom of any ground mounted sound barrier and the adjacent ground, or between the bottom of any wall mounted sound barrier and the top of the adjacent wall. Exceptions may be allowed as necessary for drainage as indicated on the plans.

Sound barrier wall posts shall be placed vertical with a tolerance of 1/2 in. per 10 ft on each axis. Sound barrier wall posts shall be placed at the distance indicated on the plans with a tolerance of 1 in. from centerline to centerline. Sound barrier wall posts shall be aligned to within 1 in. when measured from a straight line from the 2 adjacent posts. Sound barrier wall posts shall be at the height as shown on the Plans. The posts shall project above the top sound barrier wall panel by 1 1/2 in. ± 1/2 in. The top of the sound barrier wall shall be at or above the acoustical profile. Steel posts embedded in concrete shall have bottom cover of 8 in. ± 4 in. Field-cut steel posts shall be primed with an organic zinc primer and painted in accordance with 619.

After post erection, the area shall be backfilled to within 6 in. of the required final grade or as specified on the plans. The aggregate pad shall be placed as required. Positive drainage of the work area shall be maintained.

An aggregate pad of No. 2 Stone shall be included that extends a minimum of 4 in. outside of each side of the panel and 4 in. below the bottom of the panel.

The sound barrier system and sound barrier system components shall be maintained until final acceptance. Elements of the sound barrier system that are damaged or destroyed, including

due to graffiti or other vandalism, shall be repaired or replaced as directed by IFA. Repairs and repainting shall be conducted in accordance with the manufacturer's guidance and 620.02.

After construction of the sound barrier system the site shall be restored to the original condition with grading, seeding and sodding in accordance with the plans.

(a) Construction Requirements for Precast Panels

Sound barrier wall panels shall be placed in accordance with the plans and centered between adjacent posts. The sound barrier wall panels shall be of sufficient length to span the entire length between posts less 1/2 the width of the smallest retaining flange.

Panels may be field-cut to facilitate erection in accordance with the manufacturer's recommendation. Field-cut panels shall be cut to have the least impact on any patterns present in the textured or colored finish. Field-cut panels or other field cut components shall be painted in accordance with the manufacturer's guidance.

(b)Construction Requirements for Masonry

All grouting and reinforcing work for masonry block systems shall be performed by masonry craftworkers holding current International Masonry Institute, IMI, Grouting and Reinforcing Certification. Proof of certification shall be submitted prior to the beginning of work.

620.07 Acceptance

The Design-Build Contractor shall submit 2 ft by 2 ft sound barrier panel samples or five masonry block units in the colors and textures proposed and a 2 ft sample of painted support post, prior to the approval of the working plans. Once approved, these samples will be used as a control sample to verify delivered products meet the aesthetic requirements. The sound barrier system will be accepted for color based on a visual comparison between the control sample and the color of the wall as constructed in place.

The sound barrier system will be accepted for quality based on a visual inspection of the components of the system by IFA. The sound barrier system shall be subject to rejection due to failure to be in accordance with the requirements specified herein. In addition, the following defects may also be sufficient cause for rejection:

(a) Defects that indicate imperfect fabrication

(b) Defects in physical appearance such as cracks, checks, dents, scrapes, chips, stains, or color variations.

IFA will determine whether a defective sound barrier shall be repaired or shall be rejected. Repair, if allowed, shall be completed by the Design-Build Contractor, as approved by IFA.

620.08 Basis of Item

Wall mounted sound barrier panels, bridge mounted sound barrier panels, ground mounted sound barrier panels, wall mounted sound barrier erection, bridge mounted sound barrier erection, and ground mounted sound barrier erection shall be quantified by the square

foot of wall surface area in accordance with the limits of the sound barrier envelope as shown on the plans. The vertical and horizontal distance for each section of the wall defines the sound barrier envelope. The vertical distance extends from the elevation at the bottom of the lowest panel to the elevation of the acoustic profile for each section of the wall. The horizontal distance extends from centerline to centerline of adjacent posts for each section of wall. Coping will not be measured.

No measurement will be made for any required brackets needed for the attachment of signs to the sound barrier.

IFA may choose to acquire additional precast sound wall panels or masonry blocks in the colors and patterns selected on the project. A maximum of 12 panels of each type shall be delivered to the District Office. If IFA elects to acquire additional precast sound wall panels or masonry blocks, the Design-Build Contractor shall provide the material as extra work in accordance with 104.03.

Partial payment will be made for sound barrier panels stockpiled on the Project Site or at the Design-Build Contractor's approved storage location within the State of Indiana. Partial payment will be based on the delivered cost of the sound barrier panels, as verified by invoices that include freight charges. The Design-Build Contractor shall furnish the invoices and all required certifications. Partial payment will not exceed 75% of the contract unit price for bridge mounted, ground mounted or wall mounted sound barrier panels. Prior to authorizing the partial payment, verification will be obtained that all required inspection has been made and that the panels are acceptable.

Collection of all information not shown on the Plans, revisions due to conflicts, sound barrier system details, all additions or incidentals necessary to provide complete plans, and any redesigning of Plans or details will be quantified by the contract lump sum for sound barrier design and layout.

The items list shall include the following:

Item Description ***Unit Symbol***

Sound Barrier Design and Layout ..... LS

Sound Barrier Erection, _____, _____ .....SFT
mounting type, type***

Sound Barrier Panels, _____, _____ .....SFT
mounting type, type***

** Type of sound barrier system: (BM) bridge mounted, (GM) ground mounted, (WM) wall mounted*
*** Type 1 or 2*

The following are considered incidental to these items:

Sound barrier panel materials, including vertical support posts, coping, aggregate pad mortar, grout and joint reinforcement for masonry block, fasteners, closures, expansion plates, openings and incidentals shall be included in the cost of the sound barrier panels for the type of sound barrier panels. Any formliner and color required by Project aesthetics.

The design, furnishing and installation of brackets for project signage that attach to the sound barrier. The Design-Build Contractor shall follow notes provided in the plans and follow guidelines in the Manual on Uniform Traffic Control Devices, MUTCD, regarding required positioning of the brackets and signage.

All labor and materials to prepare and erect the sound barrier.

Foundation preparation and construction with associated work.

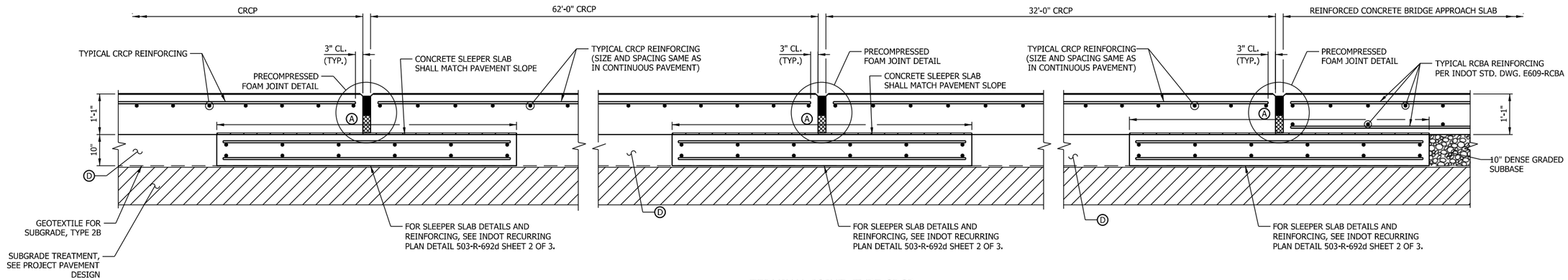

TERMINAL JOINT, TYPE CRCP

SCALE: ¾" = 1'-0"

BILL OF MATERIALS	
CONCRETE	
CONCRETE, CLASS "A" (C)	XXX CYS
MISCELLANEOUS	
TERMINAL JOINT, TYPE CRCP	XX LFT
PRECOMPRESSED FOAM JOINT (C)	XX LFT

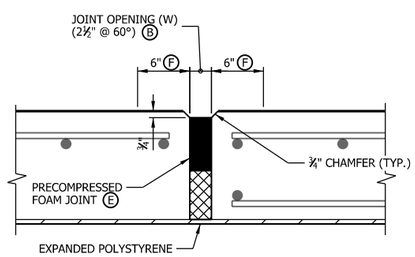

PRECOMPRESSED FOAM JOINT DETAIL

SCALE: 1½" = 1'-0"

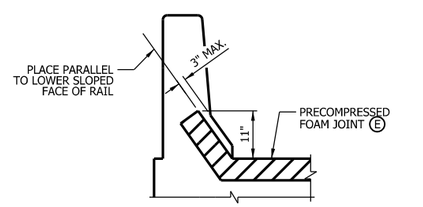

PRECOMPRESSED FOAM JOINT DETAIL AT RAIL

SCALE: ¾" = 1'-0"

NOTES:

1. FOR ADDITIONAL INFORMATION ON TERMINAL JOINT, TYPE CRCP, SEE SPECIAL PROVISIONS.
2. ALL SLEEPER SLAB CONCRETE SHALL BE CLASS A.
3. ALL REINFORCING BARS SHALL BE EPOXY COATED.
4. MIN. LAP FOR #5 = 3'-6".
5. FOR ADDITIONAL REINFORCING BAR NOTES AND DETAILS, SEE STANDARD DRAWING E703-BRST-01.

LEGEND:

CRCP DENOTES CONTINUOUSLY REINFORCED CONCRETE PAVEMENT

(A) LIMITS OF POLYETHYLENE BOND BREAKER (MIN. THICKNESS 10 MILS)

(B) THE JOINT OPENING WIDTH SHALL BE CONSTRUCTED BASED ON THE ACTUAL AMBIENT TEMPERATURE AT THE TIME OF CONSTRUCTION, WITH THE MANUFACTURER'S JOINT SETTING TABLE. THE BRIDGE EXPANSION LENGTH SHALL BE AS SHOWN ON THE PLANS. THE MINIMUM AND MAXIMUM JOINT OPENING WIDTH SHALL BE AS SHOWN BELOW:
EXPANSION LENGTH 250 FT. OR LESS
W (MIN.) = 1.3 IN.
W (MAX.) = 3.7 IN.
EXPANSION LENGTH GREATER THAN 250 FT. AND LESS THAN 400 FT.
W (MIN.) = 1.0 IN.
W (MAX.) = 4.0 IN.

(C) FOR INFORMATION ONLY, INCLUDED IN THE COST OF "TERMINAL JOINT, TYPE CRCP".

(D) 440 LBS/SYS QC/QA-HMA, 3, 64, BASE, 19.0 MM, ON 6 IN. OF COMPACTED AGGREGATE, NO. 53, SEE PROJECT PAVEMENT DESIGN

(E) THE PRECOMPRESSED FOAM JOINT SHALL ACCOMMODATE BOTH THE MINIMUM AND MAXIMUM JOINT OPENING WIDTHS AS SHOWN HEREIN.

(F) NEXT GENERATION CONCRETE SURFACE SHALL BE TERMINATED 6 IN. BEFORE JOINT.

DRAFT
NOT FOR CONSTRUCTION

RECOMMENDED FOR APPROVAL
DESIGN ENGINEER DATE

DESIGNED: JJO DRAWN: CLF
CHECKED: BDL CHECKED: JJO

INDIANA
DEPARTMENT OF TRANSPORTATION

TERMINAL JOINT DETAILS: TYPE CRCP

HORIZONTAL SCALE	BRIDGE FILE
AS NOTED	TBD
VERTICAL SCALE	DESIGNATION
AS NOTED	TBD
SURVEY BOOK	SHEETS
ELECTRONIC	1 of 1
CONTRACT	PROJECT
B-36910	1600808

cfitts
1/15/2020 9:18:47 am
model: Sheet cre alt D2
file: c:\caddlib\pw\cfitts\greatlakes\d0144328\terminal joint.dgn

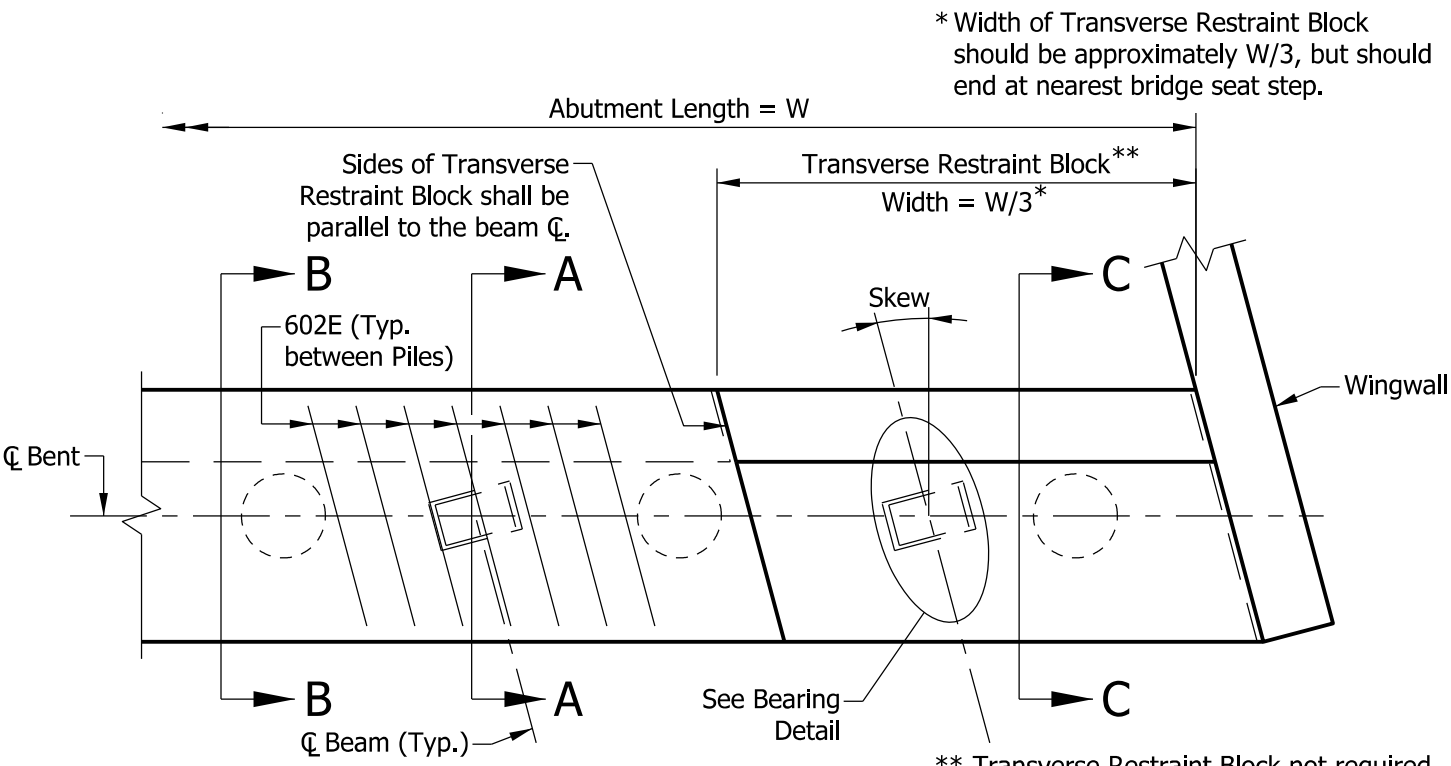

PILE CAP PLAN

** Transverse Restraint Block not required where stepped bridge seats provide lateral restraint in both directions.

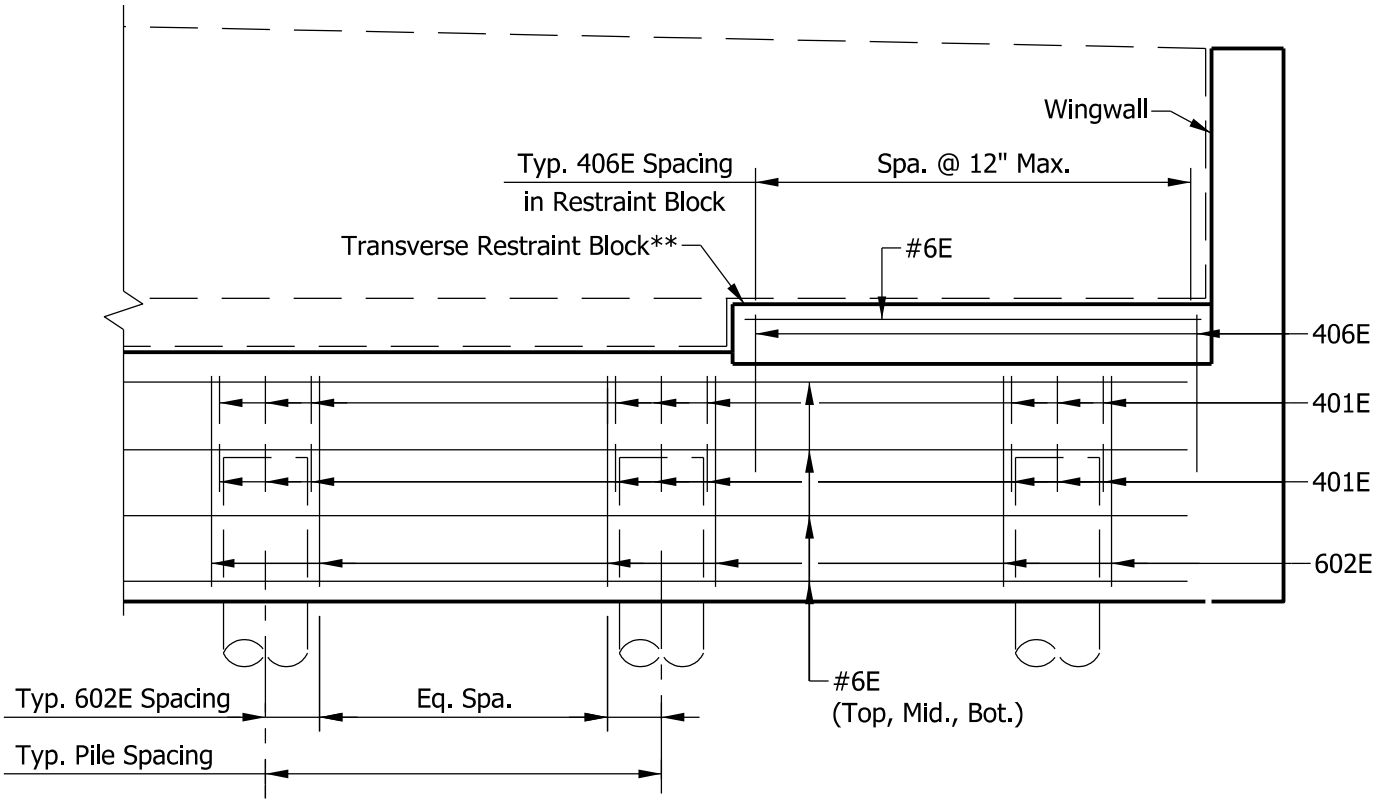

PILE CAP ELEVATION

SEMI-INTEGRAL END BENT DETAILS

Figure 409-3A

(Sheet 1 of 7)

DRAFT 09/13/19

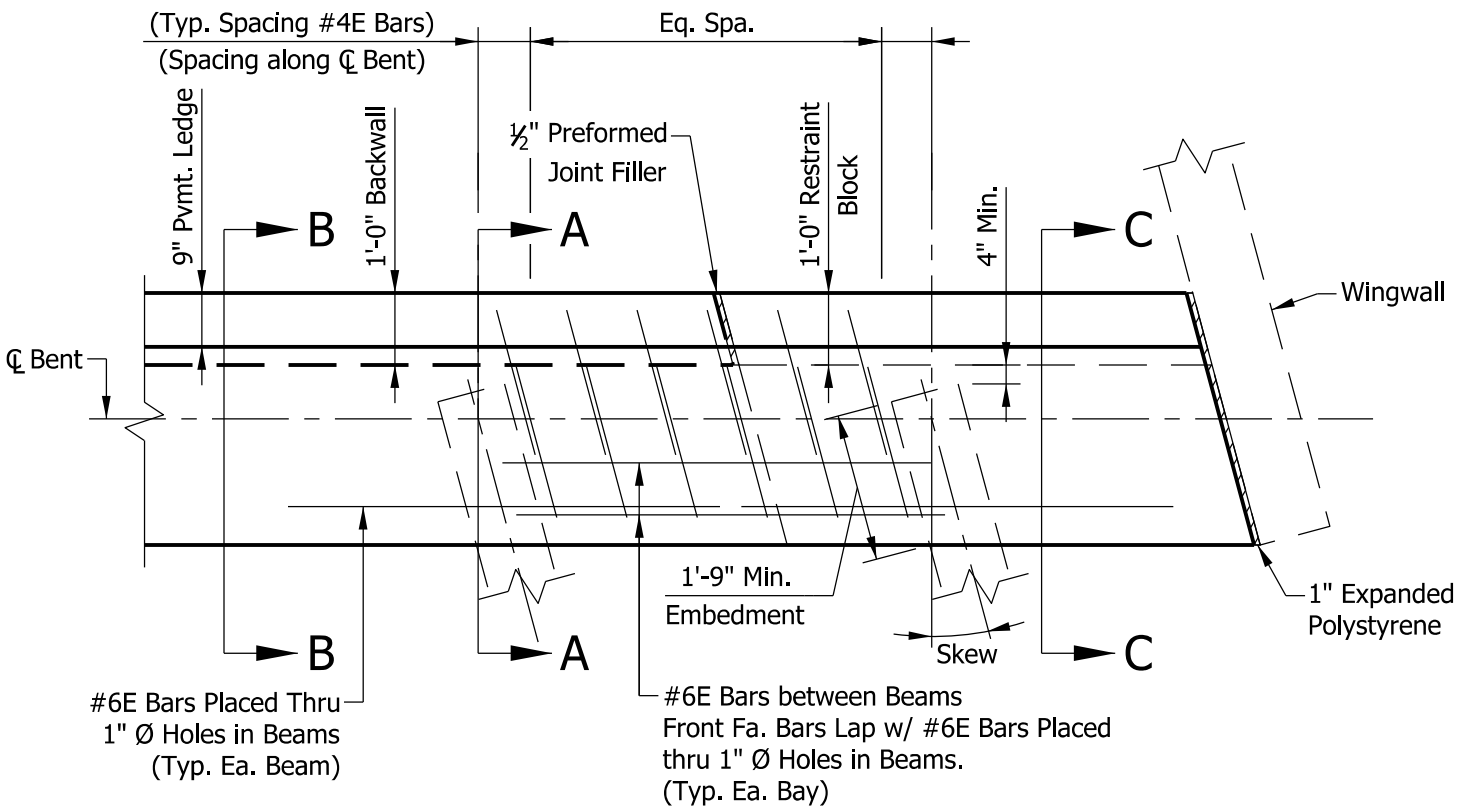

END DIAPHRAGM PLAN

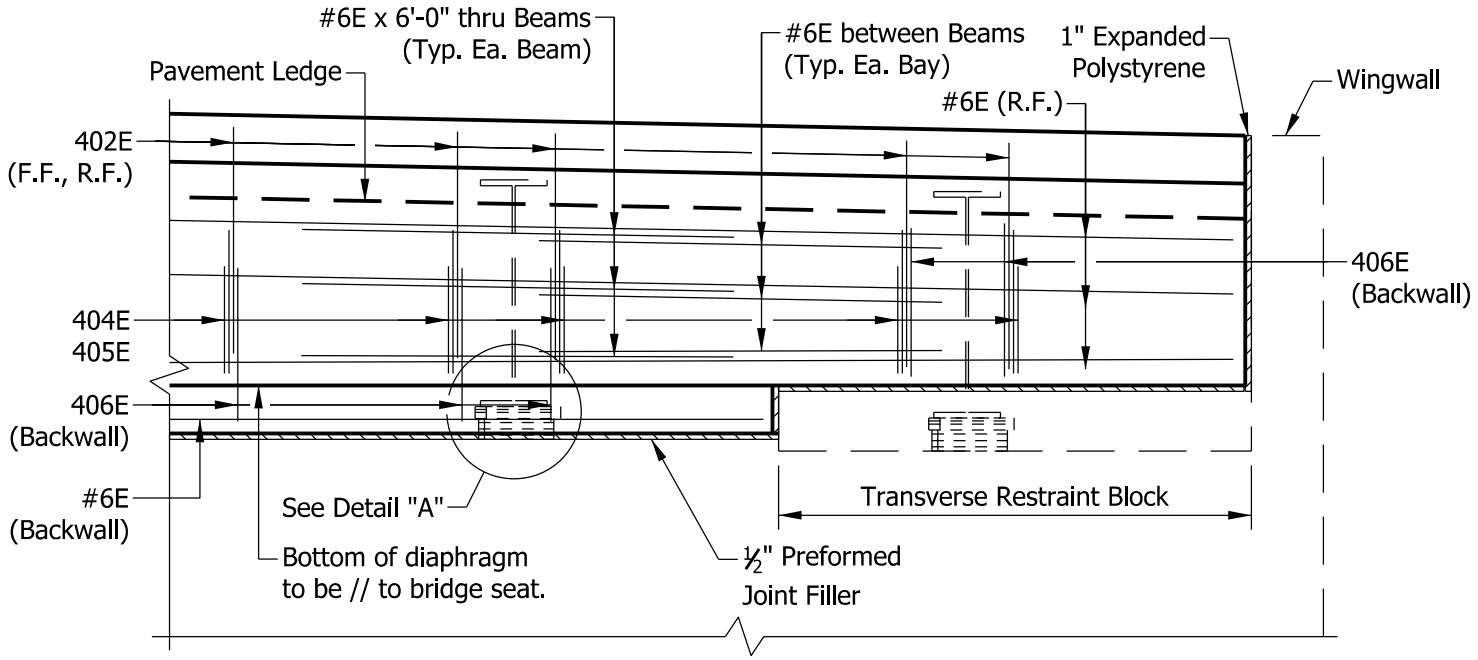

END DIAPHRAGM ELEVATION

SEMI-INTEGRAL END BENT DETAILS

DRAFT 09/13/19

Figure 409-3A

(Sheet 2 of 7)

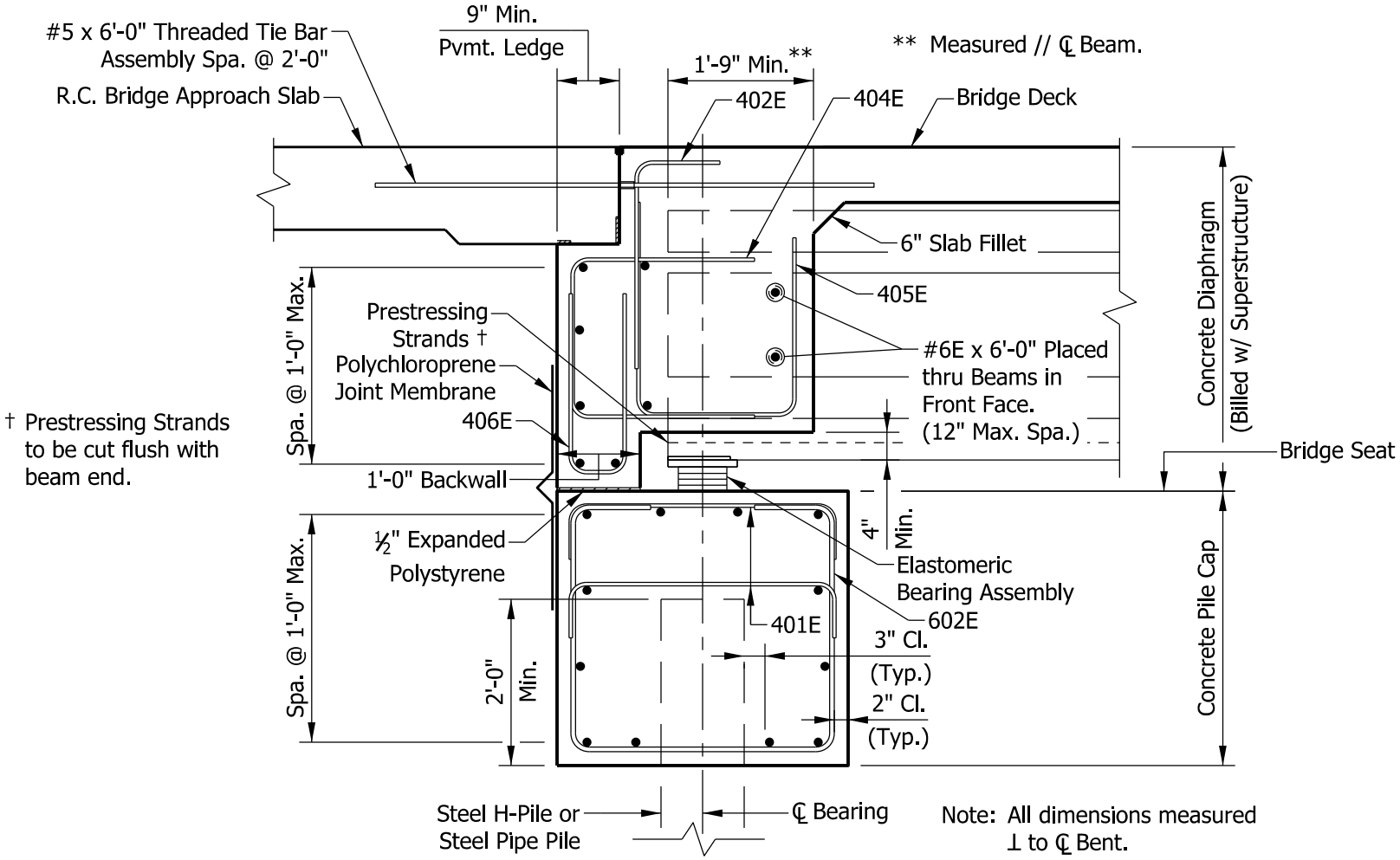

SECTION A-A THROUGH CONCRETE BEAM

DRAFT 09/13/19

SEMI-INTEGRAL END BENT DETAILS
Figure 409-3A
(Sheet 3 of 7)

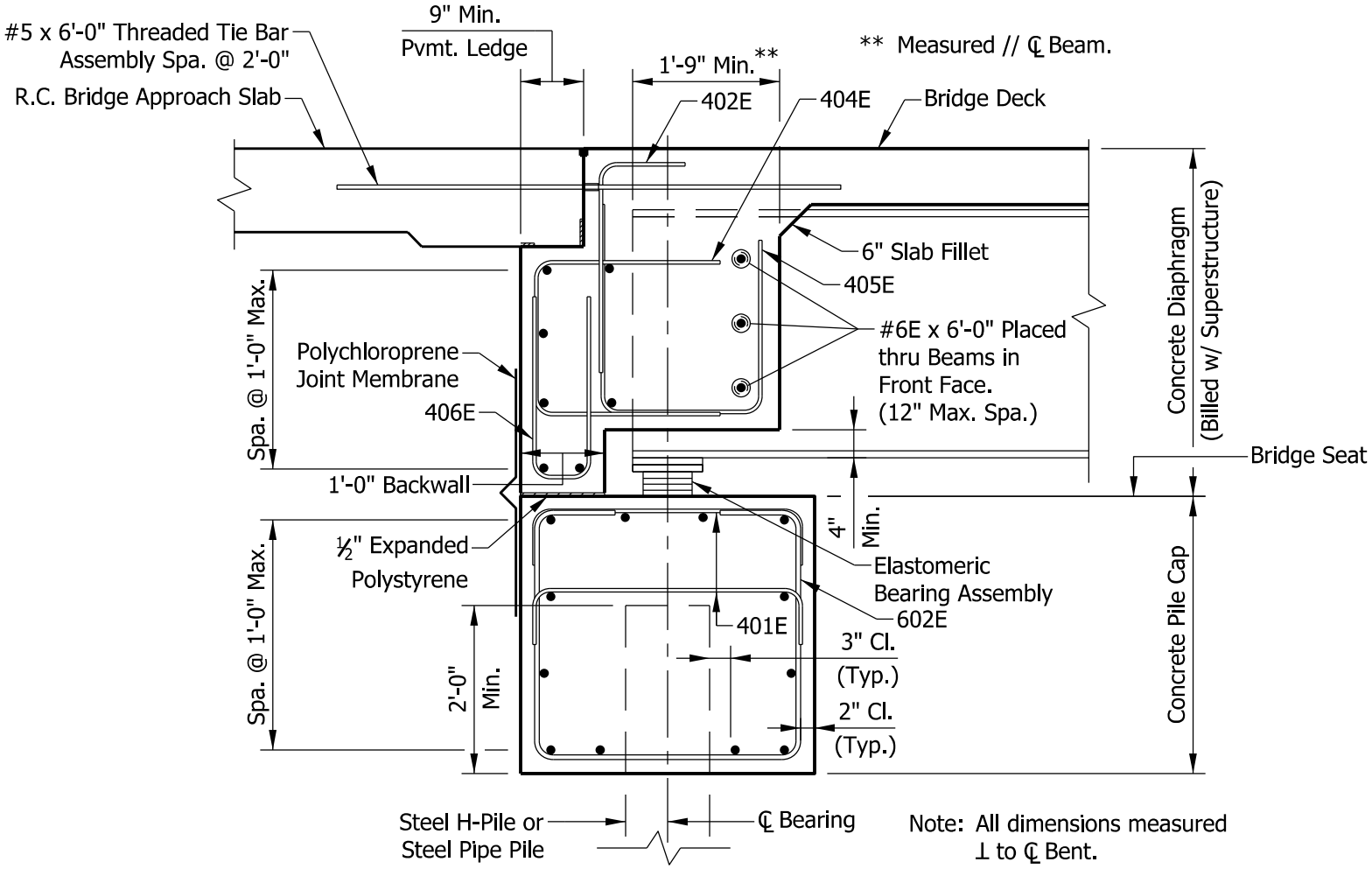

SECTION A-A THROUGH STEEL BEAM

DRAFT 09/13/19

SEMI-INTEGRAL END BENT DETAILS
Figure 409-3A
(Sheet 4 of 7)

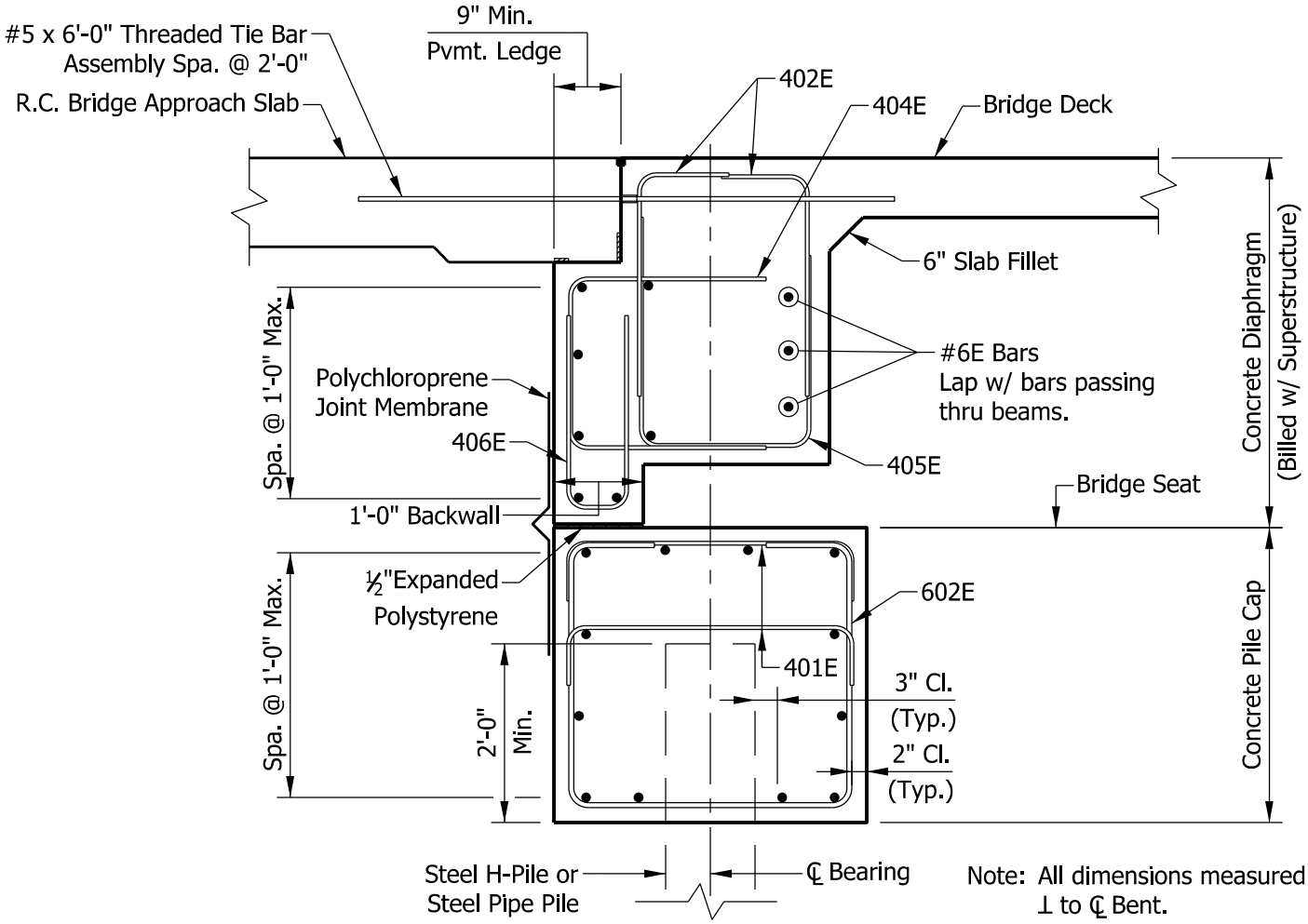

SECTION B-B BETWEEN BEAMS

DRAFT 09/13/19

SEMI-INTEGRAL END BENT DETAILS
Figure 409-3A
(Sheet 5 of 7)

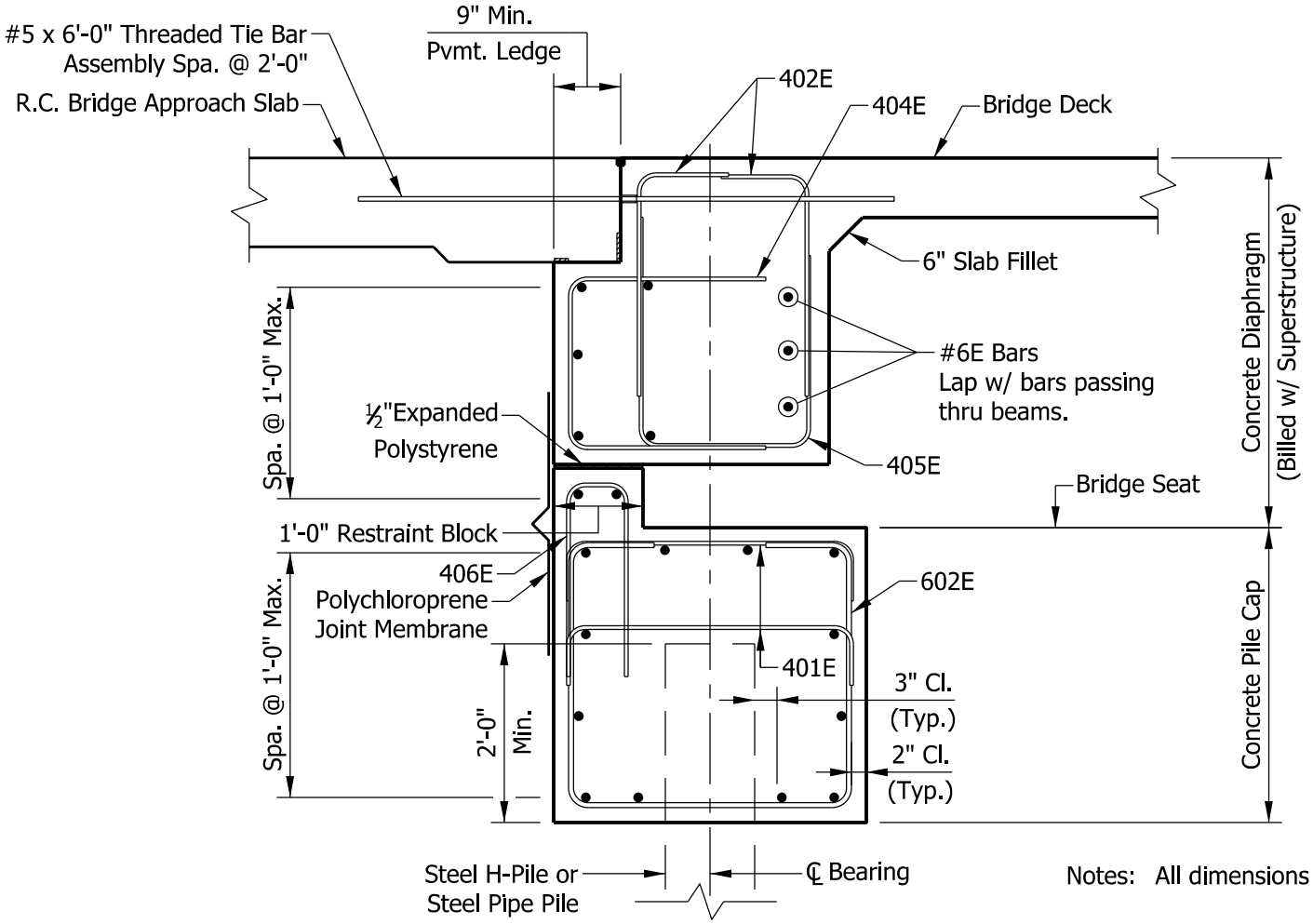

Notes: All dimensions measured ⊥ to ℄ Bent.

Transverse Restraint Block not required when stepped bridge seats provide lateral restraint in both directions.

SECTION C-C BETWEEN BEAMS
THROUGH TRANSVERSE RESTRAINT BLOCK

DRAFT 09/13/19

SEMI-INTEGRAL END BENT DETAILS
Figure 409-3A
(Sheet 6 of 7)

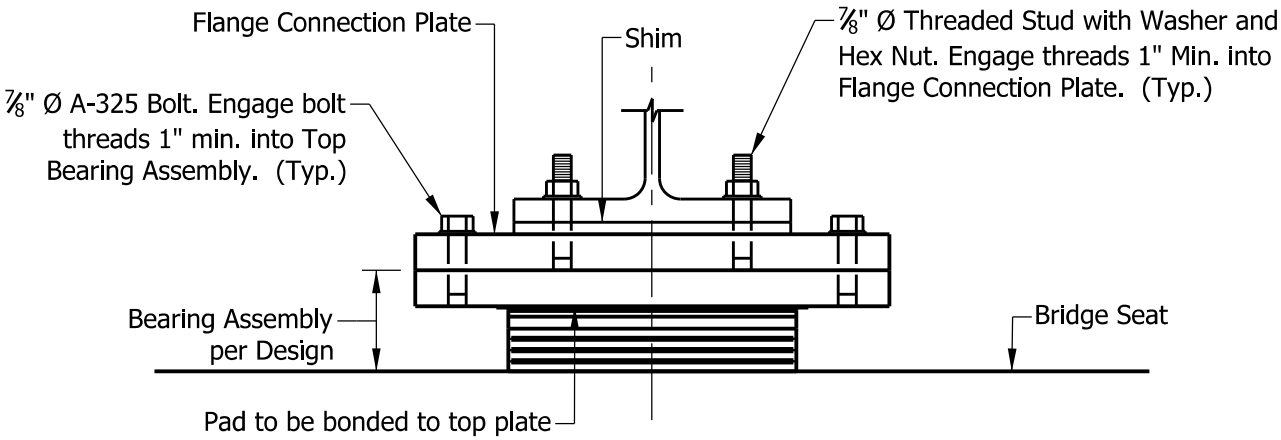

SECTION THROUGH STEEL BEAM

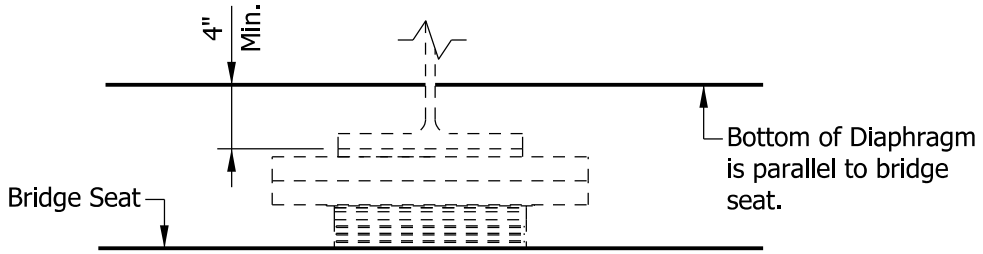

(STEEL BEAM)

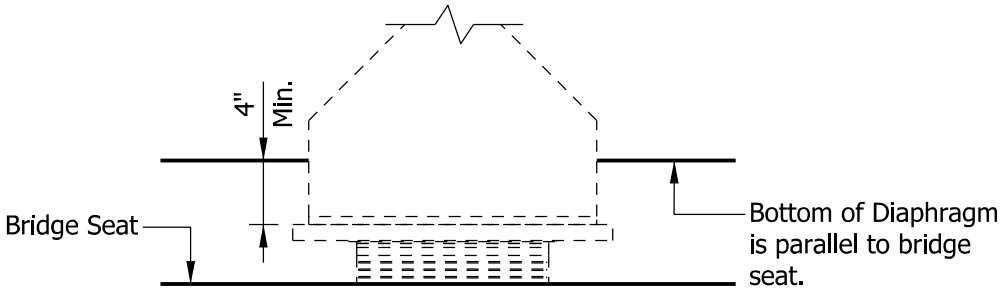

(CONCRETE BEAM)

DETAIL "A"

SEMI-INTEGRAL END BENT DETAILS

Figure 409-3A

(Sheet 7 of 7)

DRAFT 09/13/19

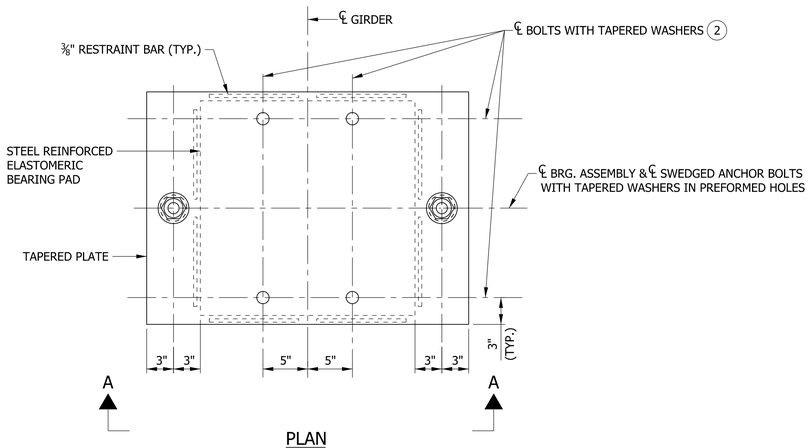

PLAN
(BOTTOM FLANGE NOT SHOWN FOR CLARITY)

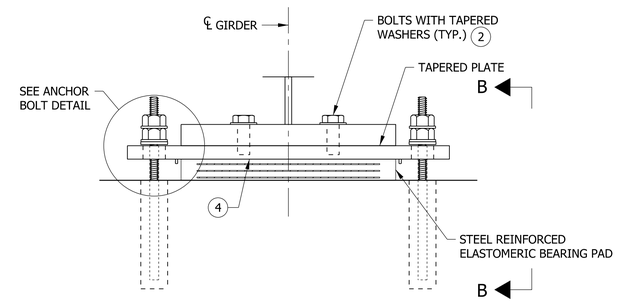

SECTION A-A

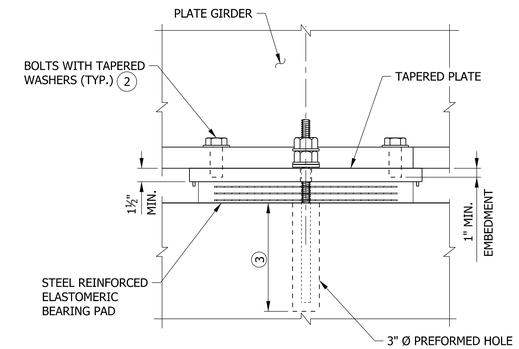

SECTION B-B

FIXED BEARING

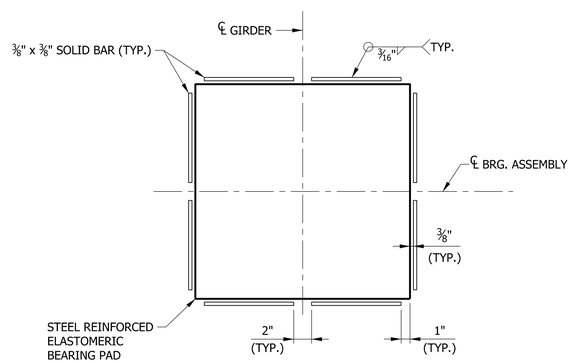

RESTRAINT BAR PATTERN (5)

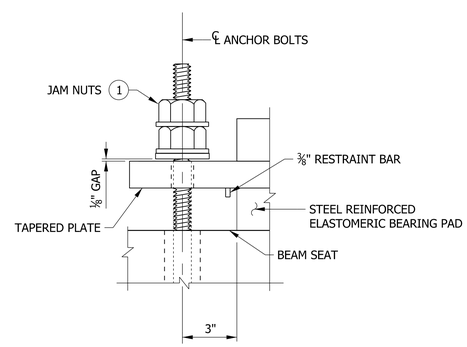

ANCHOR BOLT DETAIL

LEGEND

(1) INSTALL LOWER NUT IN CONTACT WITH TAPERED PLATE AND THEN BACK OFF ½ TURN. INSTALL UPPER NUT SNUG TIGHT TO PREVENT LOWER NUTS FROM LOOSENING.

(2) BOLTS SHALL BE DRILLED AND TAPPED TO A MINIMUM EMBEDMENT OF 1" INTO THE TAPERED PLATE.

(3) THE HOLES FOR THE ANCHOR BOLTS SHALL BE FORMED IN THE PIER CAP. HOLES SHALL NOT BE DRILLED. THE HOLE FORM MUST BE REMOVED PRIOR TO PLACING & GROUTING THE ANCHOR BOLTS. THE GROUT SHALL BE HIGH STRENGTH, NON-SHRINK, NON-METALLIC.

(4) ELASTOMERIC BEARING PAD SHALL BE VULCANIZED WITH THE BOTTOM OF THE TAPER PLATE . THE BOTTOM FACE OF THE TAPERED PLATE SHALL NOT BE METALLIZED.

(5) AS AN ALTERNATE TO THE RESTRAINT BARS, DESIGN-BUILD CONTRACTOR MAY USE A THICKER PLATE WITH A ⅜" MINIMUM RECESS IN THE BOTTOM OF THE TAPERED TOP PLATE.

NOTES:

1. ANCHOR BOLTS CONNECTING BOTTOM FLANGE TO TAPER PLATE SHALL BE ASTM F3125 GRADE A325 TYPE 1. SWEDGED ANCHOR BOLTS SHALL BE ASTM F1554 WITH GRADE AS DETERMINED BY FINAL DESIGN REQUIREMENTS.
2. ALL STEEL PLATES SHALL BE ASTM A709 GRADE 36 OR 50 AND METALLIZED. (SEE SPECIAL PROVISIONS)
3. TAPERED PLATE SHALL BE TAPERED AS NECESSARY TO ACCOMMODATE PROFILE GRADE AND MINIMIZE ROTATION.

NOTE TO DESIGN-BUILD CONTRACTOR

THESE DETAILS REPRESENT MINIMUM REQUIREMENTS. DESIGN-BUILD CONTRACTOR SHALL BE RESPONSIBLE FOR THE FINAL DESIGN AND DETAILING ENSURING THE DIMENSIONS AND SIZE OF ALL COMPONENTS SATISFY THE REQUIREMENTS OF THE PROJECT STANDARDS.

DRAFT
NOT FOR CONSTRUCTION

RECOMMENDED FOR APPROVAL _____ DESIGN ENGINEER DATE

DESIGNED: _____ DRAWN: _____

CHECKED: _____ CHECKED: _____

INDIANA
DEPARTMENT OF TRANSPORTATION

FIXED BEARING ASSEMBLY DETAILS

HORIZONTAL SCALE	BRIDGE FILE
NOT TO SCALE	
VERTICAL SCALE	DESIGNATION
NOT TO SCALE	
SURVEY BOOK	SHEETS
	of
CONTRACT	PROJECT

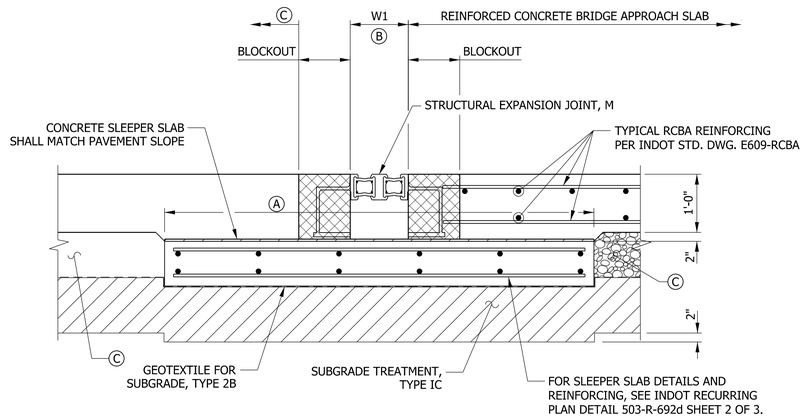

SECTION AT MODULAR JOINT

SCALE: ¾" = 1'-0"

CROSS HATCHED AREA INDICATES BLOCKOUT FOR STRUCTURAL EXPANSION JOINT, M (DIMENSIONS PER MANUFACTURER SPECIFICATIONS)

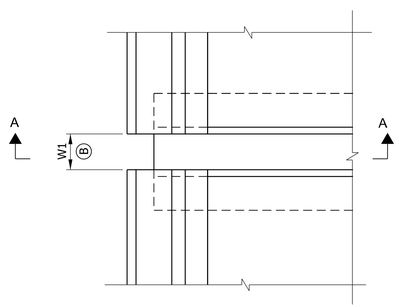

PLAN

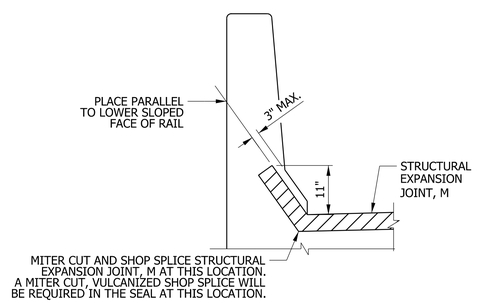

SECTION A-A

STRUCTURAL EXPANSION JOINT DETAIL AT RAIL

SCALE: ¾" = 1'-0"

LEGEND:

CRCP DENOTES CONTINUOUSLY REINFORCED CONCRETE PAVEMENT

(A) LIMITS OF POLYETHYLENE BOND BREAKER (MIN. THICKNESS 10 MILS)

(B) THE JOINT OPENING WIDTH SHALL BE CONSTRUCTED IN ACCORDANCE WITH THE MANUFACTURER'S JOINT SETTING TABLE BASED ON THE ACTUAL AMBIENT TEMPERATURE AT THE TIME OF CONSTRUCTION AND THE CALCULATED EXPANSION AND CONTRACTION OF THE BRIDGE. THE BRIDGE EXPANSION LENGTH SHALL BE AS SHOWN ON THE PLANS.

(C) VARIES BASED ON PAVEMENT TYPE. SEE ATTACHMENT 14-2 OR RSP 503-R-692d.

NOTES:

1. FOR INTEGRAL STRUCTURES WITH EXPANSION LENGTHS GREATER THAN 400 FT TO THE TERMINAL JOINT, A MODULAR JOINT IS REQUIRED.
2. WIDTH OF EXPANSION JOINT, M AND SLEEPER SLAB TO MATCH WIDTH OF REINFORCED CONCRETE BRIDGE APPROACH SLAB.
3. ALL SLEEPER SLAB CONCRETE SHALL BE CLASS A.
4. ALL REINFORCING BARS SHALL BE EPOXY COATED.
5. MIN. LAP FOR #5 = 3'-6".
6. FOR ADDITIONAL REINFORCING BAR NOTES AND DETAILS, SEE STANDARD DRAWING E703-BRST-01.

DRAFT
NOT FOR CONSTRUCTION

RECOMMENDED FOR APPROVAL _____ DESIGN ENGINEER DATE

DESIGNED: _____ DRAWN: _____

CHECKED: _____ CHECKED: _____

INDIANA
DEPARTMENT OF TRANSPORTATION

ATTACHMENT 14-5
TERMINAL JOINT DETAILS
MODULAR JOINT APPLICATION

HORIZONTAL SCALE	BRIDGE FILE
AS NOTED	
VERTICAL SCALE	DESIGNATION
AS NOTED	
SURVEY BOOK	SHEETS
	of
CONTRACT	PROJECT

ATTACHMENT 15-1: EXISTING UTILITY MATRIX

Project: I-69 Sec 6 **INDOT DES: 1801695 (Contract 5) All Segments** **Update Version: March 6th, 2020**

UtilityOwner	Conflict ID Number	Segment	Location	Conflict Resolution Method	Expected Utility Adjustment Completion
AT&T - Distribution					
	ATT-EXT-01	A	465 - east of Mooresville Rd. Bypass	Adjustment	2/23/2021
	ATT-6.5-01	B	Mann Rd. And Thompson Rd. (west of White River)	Protect in Place	N/A
	ATT-6.5-02	B	Thompson Rd. - between Tibbs and Harding	Adjustment	10/31/2021
	ATT-6.5-03	B	Harding Ct.	Adjustment	11/24/2021
	ATT-6.5-04	B	Bluff Rd.	Protect in Place	N/A
	ATT-6.5-05	B	Meridian St.	Protect in Place	N/A
	ATT-6.5-06	B	Epler	Adjustment / Retire in Place	10/31/2021
	ATT-6.5-07	B, D	Belmont	Adjustment / Retire in Place	2/12/2021
	ATT-6.5-08	D	Southport Rd.	Adjustment / Protect in Place	6/27/2021
	ATT-6.4-C5-01	E	Fairview Rd.	Adjustment	4/13/2021
	ATT-6.4-C5-02	E	Stevens	Adjustment	8/11/2021
	ATT-6.4-C5-03	E	Glenns Valley	Adjustment	8/11/2021
	ATT-6.4-C5-04	E	County Line Rd	Adjustment	8/11/2021
	ATT-6.4-C5-05	E	Glenns Valley	Adjustment	8/11/2021
	ATT-6.4-C5-06	E	Wicker	Adjustment	8/11/2021
	ATT-6.4-C5-07	E	Glenns Valley to County Line	Retire in Place	8/11/2021
Century Link - National					
	CTLN-EXT-01	C	Crossing Lick Creek Interceptor	Adjustment	8/1/2020
	CTLN-6.5-01	B	Edgewood	Adjustment	8/2/2021
	CTLN-6.5-02	B	Indiana RR Bridge - in RR ROW	Protect in Place	N/A
Citizens Energy Group - Gas					
	CEGG-EXT-01	A	465 @ Tincher	Retire in Place	5/16/2020
	CEGG-6.5-01	B,D	SR-37 / Southport Rd. / Belmont / I-465	Adjustment / Retire in Place	10/29/2021
	CEGG-6.5-02	B	Mann Rd.	Adjustment	2/12/2021
	CEGG-6.5-03	B	Thompson (west)	Adjustment	2/12/2021
	CEGG-6.5-04	B	Thompson (east)	Adjustment	3/20/2021
	CEGG-6.5-05	B	Harding	Adjustment	2/12/2021
	CEGG-6.5-06	B	Bluff	Adjustment	2/12/2021
	CEGG-6.5-07	B	Meridian	Adjustment	2/12/2021
	CEGG-6.5-08	B	Epler	Adjustment	3/20/2021
	CEGG-6.5-09	B	Edgewood	Adjustment	3/20/2021
	CEGG-6.5-10	D	Belmont	Adjustment	4/13/2021
	CEGG-6.5-11	D	Banta	Adjustment	4/13/2021
	CEGG-6.5-12	D	Southport Rd. / Wellingshire / Perry Commons	Adjustment	4/13/2021
	CEGG-6.4-5-01	E	Fairview to Steven	Adjustment	3/10/2021
	CEGG-6.4-5-02	E	Glenns Valley / N. Bluff	Adjustment	4/4/2021
	CEGG-6.4-5-03	E	Wicker	Adjustment	4/4/2021
	CEGG-6.4-5-04	E	North of Wicker	Adjustment	4/4/2021
Citizens Energy Group - Sewer					
	CEGS-EXT-1	A,C	Various I-465 Crossings (*see workplan for locations*)	2 Cross-Bore Repairs / Protect in Place / Adjustment	N/A
	CEGS-6.5-13	B	Mann Rd. / Thompson (west)	Protect in Place	N/A
	CEGS-6.5-14	B	465 just east of ditch	Protect in Place	N/A
	CEGS-6.5-15	B	465 at Mann Rd. Ramp taper	Adjustment	N/A
	CEGS-6.5-16	B	Extension of Foltz St.	Adjustment	N/A
	CEGS-6.5-17	B	SWD& TSL - Crossing 465 west of Harding St. and down to Warman by Ponds	Adjustment	N/A
	CEGS-6.5-10	B	Thompson (east)	Adjustment	N/A
	CEGS-6.5-11	B	Thompson (east)	Adjustment	N/A
	CEGS-6.5-18	B	INRR Bridge	Protect in Place	N/A
	CEGS-6.5-19	B	465 west of US31 Ramps	Protect in Place	N/A
	CEGS-6.5-20	B	US31SB to 465 WB Ramp	Protect in Place	N/A
	CEGS-6.5-21	B	Concord and Thompson	Adjustment	N/A
	CEGS-6.5-04	B	Harding and 465 - Deep Rock Tunnel	Protect in Place	N/A
	CEGS-6.5-08	B	5731 Kopetsky Dr.	Protect in Place	N/A
	CEGS-6.5-09	B	Kopetsky Dr. from Edgewood to Epler	Protect in Place	N/A
	CEGS-6.5-07	B	1000' North of Edgewood	Adjustment	N/A
	CEGS-6.5-06	D	250' South of Edgewood	Adjustment	N/A
	CEGS-6.5-05	D	1000' South of Edgewood	Adjustment	N/A
	CEGS-6.5-12	D	Belmont and Banta - Deep Rock Tunnel	Protect in Place	N/A
	CEGS-6.5-24	D	Belmont (south)	Protect in Place	N/A
	CEGS-6.5-03	D	Crossing Southport from Apartments east of SR37	Adjustment	N/A
	CEGS-6.5-23	D	NW Corner Southport on Belmont (Changes in Latitude)	Adjustment	N/A
	CEGS-6.5-22	D	Wellingshire Dr. (south of Southport)	Adjustment	N/A
	CEGS-6.5-02	D	2800' south of Southport Rd.	Adjustment	N/A
	CEGS-6.4-5-01	E	I-69/SR37 - South of Wicker Rd. - SMCRI	Adjustment	4/25/2021
Citizens Energy Group - Water					
	CEGW-EXT-01	A	Madison Ave.	Adjustment	6/5/2020
	CEGW-6.5-01	B	Mann Rd.	Adjustment	8/29/2020
	CEGW-6.5-02	B	Thompson (west)	Retire in Place	N/A
	CEGW-6.5-03	B	Thompson (east)	Retire in Place	N/A
	CEGW-6.5-04	B	Harding	Adjustment	5/1/2021
	CEGW-6.5-05	B	Meridian	Protect in Place	N/A
	CEGW-6.5-06	B	Edgewood	Adjustment	5/1/2021
	CEGW-6.5-07	B	Epler	Adjustment	5/1/2021
	CEGW-6.5-08	D	Southport Rd. / Belmont	Adjustment	3/14/2021
	CEGW-6.5-09	D	Extension of Stop 11 Road	Adjustment	9/27/2020

ATTACHMENT 15-1: EXISTING UTILITY MATRIX

Project: I-69 Sec 6 **INDOT DES: 1801695 (Contract 5) All Segments** **Update Version: March 6th, 2020**

UtilityOwner	Conflict ID Number	Segment	Location	Conflict Resolution Method	Expected Utility Adjustment Completion
Comcast Communications					
	COM-6.5-01	B	Thompson Rd./Epler Rd.	Adjustment	8/16/2021
	COM-6.5-02	B	Meridian	Protect in Place	N/A
	COM-6.5-03	B	Edgewood	Protect in Place	N/A
	COM-6.5-04	D	Southport / Belmont / Banta Rd.	Adjustment	9/1/2021
	COM-6.4-5-01	E	Fairview Rd.	Adjustment	4/25/2021
	COM-6.4-5-02	E	County Line / Glenns Valley	Adjustment	4/25/2021
	COM-6.4-5-03	E	Wicker	Adjustment	4/25/2021
Crown Castle - Towers					
	CCT-6.5-01	B	Kopetsky	Protect in Place	N/A
Duke Energy - Transmission					
	DET-6.5-01	B	Mainline 465 between Mann and the White River	Adjustment	7/27/2021
	DET-6.5-02	B	Mainline 465 between Mann and the White River	Adjustment	7/27/2021
	DET-6.5-03	B	Mainline 465 at East edge of Harding	Adjustment	7/9/2021
	DET-6.5-04	B	Mainline 465 East of Bluff Rd. to Meridian	Adjustment	7/27/2021
	DET-6.5-05	B	Mainline 465 East of Bluff Rd. to Meridian	Adjustment	7/27/2021
Enterprise Products					
	ENT-6.5-01	D	Mainline 69 south of Southport Rd.	Adjustment	12/26/2020
Indiana American Water					
	IAW-6.4-5-01	E	Fairview Rd. (North)	Adjustment	4/25/2021
	IAW-6.4-5-02	E	Fairview Rd. (South)	Adjustment	4/25/2021
I-Light / Indiana University Fiber					
	IUF-6.5-01	B,D	Mainline 69 and Remaining portion of SR37	Retire in Place	N/A
Indianapolis Power & Light - Transmission					
	IPLT-6.5-01	B	Conflict 18: Mainline 465 between Mann and the White River	Protect in Place	N/A
	IPLT-6.5-02	B	Conflict 14: Mainline 465 west abutment of White River bridge	Protect in Place	N/A
	IPLT-6.5-03	B	Conflict 13: 465 west of Harding	Adjustment	12/26/2020
	IPLT-6.5-04	B	Conflict 16: Mainline 465 east of Harding	Adjustment	12/26/2020
	IPLT-6.5-05	B	Conflict 17: Indiana RR Tracks	Adjustment	5/13/2021
	IPLT-6.5-06	B	Conflict 12: Epler and Harding	Protect in Place	N/A
	IPLT-6.5-07	D	Conflict 9-11: SR-37 / Southport Rd.	Adjustment	5/10/2021
	IPLT-6.4-5-01	E	Steven Dr.	Adjustment	6/29/2020
Indianapolis Power & Light - Distribution					
	IPLD-6.5-09	B	Area 9 - GV 4: Mann to White River Crossing		3/15/2021
	IPLD-6.5-03	B	Area 3 - GV 4: Epler at Belmont west thru Sunshine Gardens to Thompson Rd. east	Adjustment	6/3/2021
	IPLD-6.5-06	B	Area 6 - South 9: Harding at 465	Adjustment	7/14/2020
	IPLD-6.5-10	B	Area 10 - Bluff under I-465	Adjustment	8/29/2020
	IPLD-6.5-10	B	Area 10 - Meridian under I-465	Adjustment	8/29/2020
	IPLD-6.5-05	B	Area 5 - GV7: Harding Ct	Adjustment	4/28/2021
	IPLD-6.5-04	B,D	Area 4 - GV4: Epler East and Belmont North	Adjustment	6/3/2021
	IPLD-6.5-02	D	Area 2 - GV1: Banta / Belmont South / Southport	Adjustment	8/28/2021
	IPLD-6.5-08	D	Area 8 - Supervisory Cable	Adjustment	7/14/2020
	IPLD-6.5-01	D	Area 1 - GV8: Banta / Field East of SR-37 / Southport	Adjustment	5/30/2020
	IPLD-6.4-5-01	E	Steven Dr.	Adjustment	2/12/2021
	IPLD-6.4-5-02	E	Area 7 - GV8: County Line / Wicker	Adjustment	3/26/2021
Johnson County REMC					
	JCREMC-6.4-5-01	E	Fairview Rd.	Adjustment	6/29/2020
MCI / Verizon					
	MCIV-6.5-01	B	Indiana RR Bridge - in RR ROW	Protect in Place	N/A
	MCIV-6.5-02	B	Various I-465 Crossings	Adjustment	7/28/2021
Metro Fibernet					
	MFN-6.5-01	D	Southport Rd.	Adjustment	12/28/2020
Mobilitie					
	MOB-6.5-01		Kopetsky Dr.	Protect in Place	N/A
USGS					
	USGS-6.5-01	D	Little Buck Creek west of SR 37	Adjustment	N/A
Vectren					
	USGS-6.5-01	E	Steven Dr.	Adjustment	4/25/2021
	USGS-6.5-02	E	Bluff Rd.	Adjustment	4/25/2021
	USGS-6.5-03	E	County Line	Adjustment	4/25/2021
Windstream					
	WND-6.5-01	B	Epler	Adjustment	3/20/2021
Zayo Bandwidth					
	ZAYO-6.5-01	B	Mann / Thompson Rd.	Protect in Place	N/A
	ZAYO-6.5-02	B	Meridian	Protect in Place	N/A
	ZAYO-6.5-03	D	Banta Rd.	Adjustment	2/12/2021
	ZAYO-6.5-04	D	Southport	Adjustment	2/12/2021
	ZAYO-6.4-C5-01	E	Fairview	Adjustment	4/25/2021

ELECTRIC TRANSMISSION RIGHT-OF-WAY GUIDELINES/RESTRICTIONS
VALID FOR OHIO, INDIANA AND KENTUCKY
(Revised 11/20/14)

This list of right-of-way restrictions has been developed to answer the most frequently asked questions about property owner use of Duke Energy's electric transmission rights of way. This list does not cover all restrictions or all possible situations. You should contact the Asset Protection right-of-way specialist if you have additional concerns about the rights of way. This list of restrictions is subject to change at any time and without notice. Duke Energy reserves all rights conveyed to it by the right-of-way agreement applicable to the subject property. All activity within the rights of way shall be reviewed by an Asset Protection right-of-way specialist to obtain prior written approval. Engineering plans may be required. Compliance with the Duke Energy Right-of-Way Guidelines/Restrictions or approval of any plans by Duke Energy does not mean that the requirements of any local, county, state or federal government or other applicable agency with governing authority have been satisfied.

1. **Structures, buildings, manufactured/mobile homes, satellite systems, swimming pools (and any associated equipment and decking), graves, billboards, dumpsters, signs, wells, deer stands, retaining walls, septic systems or tanks (whether above or below ground), debris of any type, flammable material, building material, wrecked or disabled vehicles and all other objects (whether above or below ground) which in Duke Energy's opinion interfere with the electric transmission right of way are not allowed within the right-of-way limits. Transformers, telephone/cable pedestals (and associated equipment) and fire hydrants are not allowed. Manholes, water valves, water meters, backflow preventers and irrigation heads are not permitted. Attachments to Duke Energy structures are prohibited.**
2. **Fences and gates shall not exceed 10 feet in height and shall be installed greater than 25 feet from poles, towers and guy anchors. Fences shall not parallel the centerline within the rights of way but may cross from one side to the other at any angle not less than 30 degrees with the centerline. If a fence crosses the right of way, a gate (16 feet wide at each crossing) shall be installed by the property owner, per Duke Energy's specifications. The property owner is required to install a Duke Energy lock on the gate to ensure access. Duke Energy will supply a lock.**
3. **Grading (cuts or fill) shall be no closer than 25 feet from poles, towers, guys and anchors (except for parking areas; see paragraph 7) and the slope shall not exceed 4:1. Grading or filling near Duke Energy facilities which will prevent free equipment access or create ground-to-conductor clearance violations will not be permitted. Storage or stockpiling of dirt or any construction material is prohibited. Sedimentation control, including re-vegetation, is required per state regulations.**
4. **Streets, roads, driveways, sewer/water lines, other utility lines or any underground facilities shall not parallel the centerline within the right of way but may cross, from one side to the other, at any angle not less than 30 degrees with the centerline. No portion of such facility or corresponding easement shall be located within 25 feet of Duke Energy's facilities. Roundabouts, cul-de-sacs and intersections (such as roads, driveways and alleyways) are not permitted.**
5. **Any drainage feature that allows water to pond, causes erosion, directs stormwater toward the right of way or limits access to or around Duke Energy facilities is prohibited.**
6. **Contact Duke Energy prior to the construction of lakes, ponds, retention or detention facilities, etc.**
7. **Parking may be permitted within the right of way, provided that:**
   a. **Prior to grading, concrete barriers shall be installed at a minimum of 9 feet from the Duke Energy facilities. During construction, grading shall be no closer than 10 feet to any Duke Energy facility.**
   b. **After grading/paving activity is complete, Duke Energy-approved barrier sufficient to withstand a 15-mph vehicular impact shall be erected 9 feet from any Duke Energy facility.**
   c. **Any access areas, entrances or exits shall cross (from one side to the other) the right of way at any angle not less than 30 degrees with the centerline and shall not pass within 25 feet of any structure. Parking lot entrances/exits cannot create an intersection within the right of way.**
   d. **Lighting within the right-of-way limits must be approved by Duke Energy before installing. Due to engineering design standards, lighting <u>is not</u> allowed in the "Wire Zone." Where lighting is approved ("Border Zone"), the total height may not exceed 15 feet. Contact your Asset Protection right-of-way specialist as the "Wire Zone" varies for the different voltage lines.**
8. **Duke Energy will not object to certain vegetation plantings as long as:**
   a. **They do not interfere with the access to or the safe, reliable operation and maintenance of Duke Energy facilities.**
   b. **Duke Energy does not object to low-growing shrubs and grasses within the "Wire Zone." Tree species <u>are not</u> allowed within the "Wire Zone." Trees that are approved in the "Border Zone" may not exceed, at maturity, 15 feet in height. Contact the Asset Protection right-of-way specialist for "Wire Zone"/"Border Zone" definitions.**
   c. **For compliant mature height species, refer to plantfacts.osu.edu/plantlist/index.html for reference.**
   d. **Engineering drawings must indicate the <u>outermost</u> conductors.**
   e. **Vegetation that is not in compliance is subject to removal without notice.**
   f. **Duke Energy may exercise the right to cut "danger trees" outside the right-of-way limits as required to properly maintain and operate the transmission line.**

We hope this is useful information. If you have additional questions or plan any activity not mentioned above, please contact the Asset Protection right-of-way specialist for your area (see map).

AUTHORIZED COPY
Duke Energy Proprietary Business Information

Transmission Right-of-way Zones - Midwest

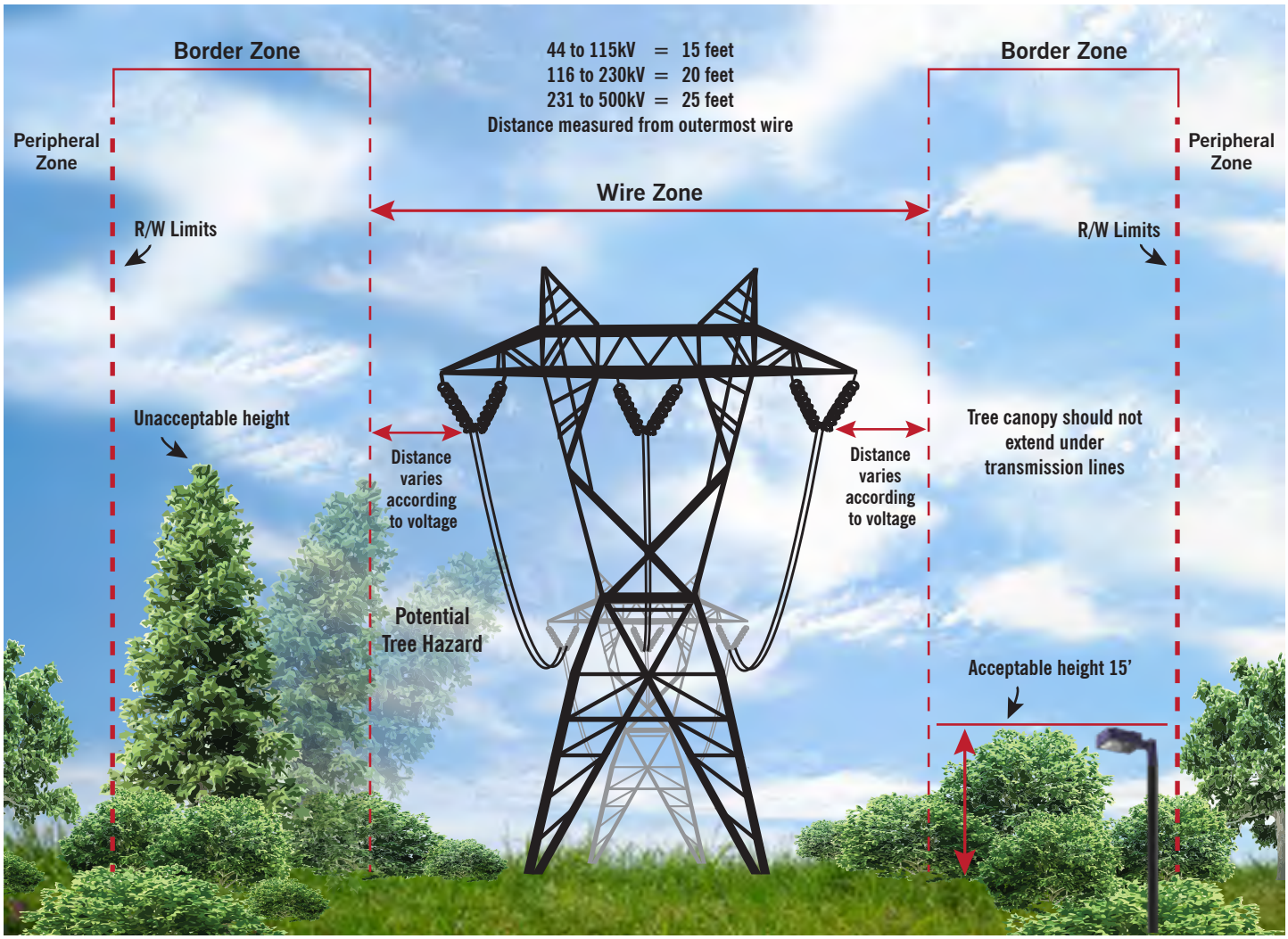

Wire Zone: Extends beyond the outermost conductor on both sides. (See diagram above.)

Permitted within the Wire Zone: Low-growing plants, shrubs and grasses.
Not permitted within the Wire Zone: Tree species of any kind.

Border Zone: Extends from the edge of the Wire Zone to the outside edge of the Right of Way.

Permitted within the Border Zone: Lighting structures and plantings within the Right of Way that do not exceed a vertical height of 15 feet. For compliant mature height species, refer to **plantfacts.osu.edu/plantlist/index.html**.

Not permitted within the Border Zone: Any object that exceeds vertical height restrictions. These restrictions are based on flat ground elevations. If the ground elevations differ, no object at any time may exceed the outermost conductor's ground elevation.

Peripheral Zone: Outside the Right of Way and adjacent to Border Zones.

Permitted within the Peripheral Zone: Trees may be planted in the Peripheral Zone. Duke Energy recommends customers exercise caution selecting and planning trees in this zone.
Not permitted in the Peripheral Zone: Trees with canopies are subject to routine trimming and possible removal.

In all zones:

When an outage risk is identified, Duke Energy will attempt to notify the affected customer. However, the company may need to take immediate action if trees cannot be pruned to appropriate levels. This may include trees and shrubs that are within 20 feet of the power line at the maximum peak load or during weather conditions that create line sag and sway.

Written approvals by Duke Energy are required for all plans.

We hope this is useful information. If you have additional questions on line voltages or plan any activity not mentioned above, please contact the Asset Protection Specialist for your area. (See Map)

*Right of Way is intended to reference the easement rights granted to Duke Energy. Actual zone size may vary based upon the particular Right of Way.

©2014 Duke Energy Corporation 141196 12/2014

Duke Energy Ohio, Indiana and Kentucky Transmission Asset Protection Zones

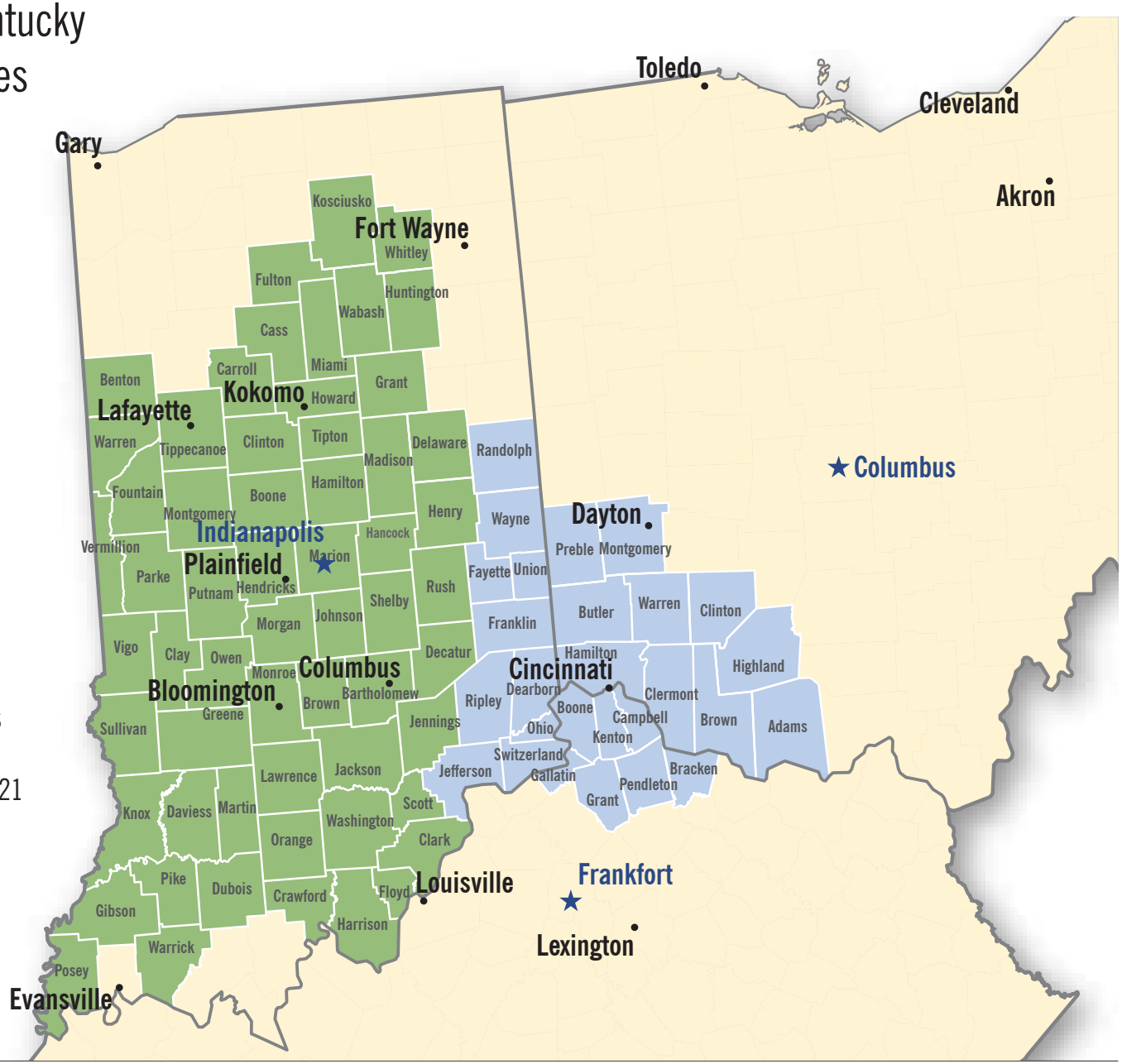

Asset Protection Right-of-Way Specialist Zones

- Midwest North – Ryan Daugherty 812.375.2021
- Midwest South – Sean Bill 513.287.4007

DUKE ENERGY®

©2017 Duke Energy Corporation 171403 7/17

Proposed improvements within Duke Energy transmission power line easements require a plan review by **Duke Energy**.

You must receive **prior written approval** from an authorized Duke Energy representative before commencing any construction or making any improvements within its transmission power line easement.

Note 1: Duke Energy will review conceptual drawings and preliminary site plans and provide feedback, however in order to receive a formal, written Letter of No Objection from Duke Energy, your drawings must be stamped and signed by a Licensed Professional Engineer, Landscaper or Surveyor:

Note 2: Plan Reviews typically take 3-4 weeks, therefore early plan submittal to Duke Energy is important.

Note 3: All underground facilities, such as, but not limited to, utility pipes or cables, and ground facilities such as, but not limited to, streets, parking lots and sidewalks, must be capable of a *heavy equipment load bearing weight of 80,000 lbs*. Duke Energy will not be responsible for damages to these approved installed facilities.

Note 4: You must specifically note underground metallic crossings or parallel sections of facilities, as there could be associated AC Mitigation study requirements associated with these types of encroachment proposals.

We review the following PLAN SHEETS insofar as our easements are concerned:

- ☐ **OVERALL SITE PLAN** (including street / road crossings) **[PDF FORMAT]**
- ☐ **GRADING PLAN** (*proposed grade elevations and existing elevations shown*) **[PDF FORMAT]**
- ☐ **UTILITY PLAN [PDF FORMAT]**
- ☐ **STORM WATER DRAINAGE PLAN [PDF FORMAT]**
- ☐ **LANDSCAPE PLAN** (Irrigation included if applicable) **[PDF FORMAT]**
- ☐ **LIGHTING PLAN [PDF FORMAT]**

Plans should include the following:

- ☐ Locations of all Duke Energy structures (poles, towers, guy wires, guy anchors, etc.)
- ☐ Borders of Duke Energy easement area
- ☐ Outermost conductors (wires) of the transmission power line
- ☐ Crossing angles of encroachments (i.e. streets, water lines, sewer lines, natural gas lines, storm water pipes, etc.)
- ☐ Illustrated 25' radial buffers around each transmission structure
- ☐ Clearly dimensioned distances from all proposed encroachments to the DE transmission structures

Additional Requirements:

- ☐ Grading Plan – label proposed and existing elevations clearly
- ☐ Landscape Plan – provide vegetation detail table with scientific plant name to the cultivar level
- ☐ Irrigation Plan – clearly label and illustrate location of low-pressure drip systems
- ☐ Lighting Plan – clearly label proposed light height and perpendicular distance to outermost conductor (wire)

Proposed Vegetation / Plantings:

- ☐ Duke Energy determines when to remove vegetation based upon its location & height, not exclusively by species or type
- ☐ Trees or Shrubs may not impede Duke Energy's access to its facilities or its easement area
- ☐ All Plantings must be kept a minimum of 25' away from any Duke Energy structures
- ☐ Trees may not be capable of exceeding XX feet in height at maturity (12' or 15' depending upon your region)
- ☐ Shrubs may not affect Duke Energy's ability to park or stage equipment around its structures or facilities
- ☐ Trees outside the easement capable of falling within five (5) feet of conductors (wires) may be cut & removed

Submit Request to: ryan.daugherty@duke-energy.com Ryan Daugherty (812-375-2021) Transmission

SANITARY STANDARDS MANUAL

Current Revision Date:	2020

SANITARY STANDARDS MANUAL

Table of Contents

CHAPTER 100 POLICIES AND PROCEDURES 10

Section 101 Introduction 10

101.01 Purpose 10

101.02 Sanitary Sewer Manual Organization 10

101.03 Updating 10

101.04 Definitions and Abbreviations 11

101.05 Enforcement of Standards 16

Section 102 General - Procedures and Requirements for all Permits 18

102.01 Introduction 18

102.02 Applicability 18

102.03 Exemptions 18

102.04 Fees 19

102.05 Refunds 19

102.06 Expiration of Permit 19

102.07 Transfer of Permit 19

102.08 Notice of Change in Permit Information 19

102.09 Amendment of Permits and Plans 19

102.10 Revocation of Permit or Variance 19

102.11 Stop-Work Order 19

102.12 Variance Procedures 20

102.13 Appeals 20

Section 103 Laterals - Procedures and Requirements 22

103.01 Introduction 22

103.02 Responsibility 22

103.03 Applicability 22

103.04 Connection Fee and EDU Calculation 22
103.05 Submittal Requirements for a Laterals Permit 26
103.06 Who May Apply 26
103.07 Laterals Inspection Requirements 26
103.08 Enforcement of Bond 26
Section 104 Sanitary Sewer Facilities - Procedures and Requirements 27
104.01 Introduction 27
104.02 Sanitary Sewer Approval and Construction Permit - General 27
104.03 Capacity Certification/ Allocation 27
104.04 Submittal Requirements for Approval and Construction Permit 27
104.05 Who May Apply for an Approval and Obtain a Permit 30
104.06 Who Can Do the Work 30
Section 105 Sanitary Sewer Construction Inspection and Acceptance Procedures 31
105.01 Introduction 31
105.02 General Authority for Investigations and Inspections 31
105.03 Construction Inspection Requirements 31
105.04 Requirements for Project Acceptance and Dedication 31
105.05 Record (“As-Built”) Drawings 32
105.06 Digital Data Submission Standards 32
105.07 Dedication of Existing Private Sewers 33
CHAPTER 200 DESIGN 34
Section 201 Lateral Design 34
201.01 Introduction 34
201.02 General 34
201.03 Prohibited Connections 34
201.04 Maximum Number of Building Connections 34
201.05 Point of Connection 35
201.06 Size, Depth, and Slope of Lateral 35

201.07 Location, Length, and Spacing of Lateral 36

201.08 Cleanouts 37

201.09 Minimum Elevation for Gravity Connection 38

201.10 Connections Utilizing an Existing Lateral 38

201.11 Laterals Crossing Drainage Ways 38

201.12 Future Connections 38

Section 202 Gravity Sanitary Sewer Design 40

202.01 Introduction 40

202.02 General 40

202.03 Sanitary Sewer Service Area Study 40

202.04 Design Flow 41

202.05 Pipe Size, Slope, and Depth 43

202.06 Extensions for Off-site Unsewered and/or Undeveloped Areas 44

202.07 Location of Sanitary Sewer Facilities 44

202.08 Location and Elevation of Sanitary Sewer Facilities within Special Flood Hazard Areas 46

202.09 Capacity Certification 47

202.10 Downstream Evaluation 47

202.11 Inadequate Downstream Capacity 49

202.12 Connections to Existing Sanitary Sewers 49

202.13 Connections in the Combined Sewer Area 50

Section 203 Sewer Structures - Manholes 52

203.01 Introduction 52

203.02 Location 52

203.03 Protection against Ponding 53

203.04 Maximum Manhole Spacing 53

203.05 Manhole Dimensions 53

203.06 Drop Connections 54

Section 204 Other Requirements 55

204.01 Digital Drafting Standards 55

204.02 Easements 55

CHAPTER 300 MATERIALS 61

Section 301 General 61

Section 302 Sanitary Sewer Pipe Material 63

Section 303 Laterals 77

Section 304 Force Main Material 79

Section 305 Manhole Materials and Appurtenances 86

CHAPTER 400 INSTALLATION 91

Section 401 Installation Requirements Applicable to Sanitary Sewers, Force Mains, and Laterals 91

Section 402 Installation Requirements Specific to Laterals 103

Section 403 Installation of Precast Manholes, Wet wells, Valve Vaults, or other Appurtenant Structures 106

Section 404 Trenchless Installation 109

Section 405 Erosion Control, Site Restoration, and Safety 121

CHAPTER 500 LIFT STATIONS AND LOW PRESSURE SYSTEMS 123

Section 501 Requirements Common to Both Lift Stations and Low Pressure Systems 123

Section 502 Lift Station Design 124

Section 503 Lift Station Equipment and Operating Requirements 136

Section 504 Low Pressure Pump Stations and Appurtenances 181

CHAPTER 600 TESTING 187

Section 601 General 187

Section 602 Gravity Sanitary Sewer Testing Requirements 188

Section 603 Force Main Testing Requirements 196

Section 604 Manhole Testing Requirements 200

Section 605 Lift Station Testing 203

Appendix B- Estimated Average Daily Flow (ADF) 210

Appendix C- Test Reports 212

Sewer Force Main Alternate Test Method 212

Sewer Force Main Test Report 213

Hydrostatic Leak Test 213

Sewer Force Main Test Report 214

Sewer Manhole Test Report 215

Air Pressure Test Data Sheet 217

Appendix D- Drawings 218

Proposed Sanitary Revisions

Section	Sanitary Revisions
Section 102.04 Fees	All applicable fees are based on the Equivalent Dwelling Unit (EDU) as listed in CWA Authority Terms and Conditions Appendix B Miscellaneous Fees and Citizens Westfield Terms and Conditions Appendix A Miscellaneous Nonrecurring Charges. Unless specified, all fees must be paid to CWA Authority, Inc. or Citizens Wastewater of Westfield, LLC. Refer to Section 103.04 for additional information
Section 103.04 Connection Fee and EDU calculation	Revised Connection Fee and EDU Calculation
Section 104.04 Submittal Requirements for Approval and Construction Permit	The Applicant shall pay all applicable fees listed in CWA Authority's Terms and Conditions Appendix B Miscellaneous Fees
Section 201.08.1.b Cleanouts	If structure is more than twenty (20) feet from the right-of-way, a sweeping tee in grassy/dirt/gravel area one (1) to three (3) feet behind the right-of-way
Section 202.13.3 Connections in the Combined Sewer Area	Connecting new storm drainage to the combined sewer system (combined sanitary and storm system) and/or modifying existing storm drainage requires approved evidence and documentation showing there will be ***no increase*** in runoff volume or peak flow entering the combined sewer system. Any increase in peak flow or volume causes an increased risk of combined sewer overflow frequency and discharge. The Utility shall review all proposed new connections and modifications of existing drainage connecting to the combined sewer system. This review, along with submitted evidence and documentation, will be used to determine if such connections are permissible
Section 301.05.2 Handling, Storage & Color	The pipe exterior may be colored per the manufacturer's standard color scheme with the exception of blue colored pipe or pipe with blue colored markings to avoid confusion with water pipes.
304.04.5 High Density Polyethylene (HDPE) Pipe Markings	Added in white lettering. For diameters 2-inch diameter and larger, pipe shall be marked with continuous green stripes to distinguish it from other utilities
304.04.7 High Density Polyethylene (HDPE) Pipe	Added HDPE welds for 6-inch diameter and larger shall be documented using a data logger.
Section 304.05.4 Ductile Iron Pipe (DIP)	Added that anti-corrosion T-bolts are required (Xylan or FluoroKote #1(blue bolts) for MJ fittings

Section	Sanitary Revisions
Section 404.04.1 Horizontal Directional Drilling (HDD)	Added that the Bore PROFILE is required for HDD installed pipe.
Section 404.04.10 Horizontal Directional Drilling (HDD)	Submittals The Contractor shall use a data logger during construction and submit a bore profile at the completion of the HDD installation. The Contractor shall submit data logger information for HPDE weld on 6-inch diameter pipe and larger
404.06 Pipe Lining on Lateral Repairs and Private Sewers	Pipe lining on lateral repair and private sewers is evaluated on a case-by-case basis and requires a variance approved by the Utility. Variance applications must include following information: 1. Lining material. Stryrene liners are prohibited. 2. Curing method. 3. Installation contractor including contact information. If a variance is approved, Contractor shall perform pre-construction inspection to document the existing conditions. Contractor shall also perform a a post-construction CCTV inspection to verify the repair was successful and acceptable. These inspection videos shall be made available to the Utility upon request.
Section 502.05 Lift Station Location	b. Added an alternative of communication of 4G cellular is acceptable to the Utility. The Applicant shall coordinate with the Utility to schedule a site investigation at the physical address of the proposed lift station to test the cellular signal strength. The Applicant is responsible for the cost of 4G reception signal strength testing.
Section 503.08.1.a Lift Station Equipment and Operating Requirements	Operations requested NEMA 4X stainless steel double throw fused main disconnect switch for utility power and portable emergency generator connection. In addition, NEMA 4X Stainless Steel generator docking station.
Section 503.08.6 Lift Station Equipment and Operating Requirements	Added 4G cellular requirements
Section 503.09.7 Lift Station Equipment and Operating Requirements	Added 4G cellular requirements
Section 504.09 Duplex Grinders	For uses other than single dwelling units, duplex grinder pumps are required.
Fig 300.02	Revised Manhole Base Riser Reduced Cap for Pipes 21-48
Fig 300.04	Revised Internal Drop Manhole Detail

Section	Sanitary Revisions
Fig 300.06	Revised Sanitary Sewer Doghouse Manhole
Fig 500.011	Revised Level 2 Submersible Lift Station- Mechnical
Figure 500.014	Revised Level 3 Submersible Lift Station - Mechanical
Fig 500.016	Revised Level 3 Submersible Lift Station- control panel
Level 3 Standard Lift Station Control Panel	Change Allen-Bradley MICROLOGIX 1100 to Allen-Bradley MICROLOGIZ 1400
Drawings	Revised Westfield Electrical drawings

CHAPTER 100 POLICIES AND PROCEDURES

Section 101 Introduction

101.01 Purpose	This Manual provides the design and construction standards for laterals and sanitary sewer facilities constructed within the CWA Authority and/or the Citizens Wastewater of Westfield, LLC (Westfield) service territory (“Utility”). Included are submittal requirements and procedures for the issuance of Approvals and Permits, and the requirements and procedures for inspection, testing, and final acceptance of sanitary sewer facilities. The Utility has been granted authority through the Sewage Disposal Service Tariff Rates, Terms, and Conditions for Sewage Disposal Service within Marion County, Indiana and Contiguous Areas, and the Sewage Disposal Service Tariff Rates, Terms, and Conditions for Sewage Disposal Service within Westfield, Indiana and Contiguous Areas (“Terms and Conditions”). All provisions of the Terms and Conditions and subsequent revisions, whether stated herein or not, are made fully a part of this Manual. This Manual presumes its user will possess a basic understanding in civil engineering design, construction, or land alteration. Readers of this Manual who are not qualified by education or experience should consult with a more qualified person or persons possessing professional expertise in one or more of these fields prior to application of the requirements set forth herein. This Manual, together with all future revisions, will be referred to as the “Citizens Energy Group Sanitary Standards”. All information required to be submitted by this Manual will be made available to any person upon written request to the Utility.
101.02 Sanitary Sewer Manual Organization	This Manual is organized to present procedures and criteria needed for the design and construction of laterals and sanitary sewer facilities. Each chapter contains an initial introduction Section which states the intent of the Section. The remaining Sections present all the requirements applicable to the Chapter.
101.03 Updating	This Manual may be reviewed annually and updated when necessary, to reflect up-to-date engineering practices and information applicable to the CWA Authority, Inc and/or Citizens Westfield. The Utility may make revisions or clarifications to any part of this Manual through policy prior to the annual update, if deemed necessary.

101.04 Definitions and Abbreviations

Whenever in these Standards or in any documents or instruments where the Standards govern, the following terms, abbreviations, or definitions are used, the intent and meaning will be interpreted as follows:

1. Abbreviations

AASHTO	American Association of State Highway and Transportation Officials
ADF	Average Daily Flow
ANSI	American National Standards Institute
ASTM	American Society of Testing and Materials
AWWA	American Water Works Association
CADD	Computer Aided Design and Drafting
CCTV	Closed Circuit Television
CSO	Combined Sewer Overflow
DIP	Ductile Iron Pipe
DU&SE	Drainage, Utility, and Sanitary Easement
EDU	Equivalent Dwelling Unit
EPA	Environmental Protection Agency
FRP	Fiberglass Reinforced Plastic or Polyester
GFI	Ground Faulting Interrupting
GIS	Geographic Information System
HDD	Horizontal Directional Drilling
HDPE	High Density Polyethylene Pipe
HOA	Homeowners Association
I/I	Inflow/Infilration
IAC	Indiana Administrative Code
IC	Indiana Code
IDEM	Indiana Department of Environmental Management
IMS	Infrastructure Management System
INDOT	Indiana Department of Transportation
IPC	Indiana Pumping Code 675 IAC 16
ISDH	Indiana State Department of Health
LTCP	Long-Term Control Plan
MCH&CH	Marion County Health and Hospital Corporation
MCP	Motor Circuit Protector
NEMA	National Electrical Manufacturers Association
OIU	Operator Interface Unit
OSHA	Federal Occupational Safety and Health Act
P&ID	Piping and Instrumentation Drawings
PCCP	Prestressed Concrete Cyclinder Pipe
PLC	Programmable Logic Controller
PMR	Phase Monitor Relay
PVCP	Polyvinyl Choride Pipe
RCP	Reinforced Conrete Pipe

RPR	Resident Project Representative
RTU	Remote Terminal Unit
SCADA	Supervisory Control and Data Acquisition
STEP	Septic Tank Elimination Program
TBH	Total Dynamic Head
TBM	Tunnel Boring Machine
TVSS	Transient-Voltage Surge Suppressor
UPC	Uniform Plumbing Code
UPS	Uninterruptible Power Supply
VCP	Vitrified Clay Pipe
VFD	Variable-Frequency Drive

2. Definitions

15-YEAR LAW AGREEMENT: A contract that effectuates an applicant's ability to construct and install a sanitary sewer facility under the provisions of Indiana Code (IC) 36-9-22 et.seq.

ACCEPTANCE: The formal written acceptance by the Utility of an entire project which has been completed in all respects in accordance with the approved plans, specifications, and this Manual including any previously approved modifications thereof.

APPLICANT: The property owner and/or their agent who requests and fills out an application for any type of permit or agreement required by this Manual.

APPROVAL: Decision that allows the applicant to proceed to the next step of the permitting process set out in this Manual.

AUGER BORING: Trenchless construction method for installing sewers.

BACKFILL: Material used to replace material removed from trenches during construction which is above the haunching (See Figure 100.01).

BEDDING: The material used in the trench to a minimum depth below the bell/barrel of the pipe for the purpose of properly supporting the pipe (See Figure 100.01).

BOARD: Board of Directors of CWA Authority, Inc.

BUILDING SEWER: An alternate term for laterals. See laterals definition.

CLEANOUT: A pipe fitting with a removable plug for inspecting and cleaning laterals.

CODE: Municipal Code of the City of Indianapolis

COMBINED SEWER: A sewer which has been designed or intended to receive both surface runoff and sewage.

COMMON laterals: A laterals which serves more than one building or residential unit.

CONNECTION FEE: Assessment to compensate the CWA Authority and/or Citizens Westfield for all the costs of capacity for the CWA Authority and/or Citizens Westfield sewer system including the entire combined sewer system and its treatment facilities.

CONTRACTOR: Any Contractor who meets the Utility's requirements and is licensed by the Department of Metropolitan Development to enter into contracts for and to perform the work of installing sewers under the Utility's jurisdiction.

COUNTY: The county of Marion or Hamilton, State of Indiana.

DEDICATION: The inspection, and if necessary, the rehabilitation of a sanitary sewer facility for public acceptance, ownership, operation, and maintenance.

DIGITAL DATA SUBMISSION STANDARDS: Standards in which the CWA Authority and/or Citizens Westfield can integrate Computer Aided Design and Drafting (CADD) drawings into the Geographical Information System (GIS) and Infrastructure Management System (IMS) environment thus maintaining the integrity and positional accuracy of the data.

DIRECTOR: Director- Underground Engineering & Construction or authorized representative.

EASEMENT: Areas along the line of all public sanitary sewer facilities which are outside the road easements or rights-of-way, and are recorded and dedicated to the Utility granting rights along the line of the sanitary sewer facility.

EQUIVALENT DWELLING UNIT (EDU): Unit used to calculate the connection fee.

ENGINEER: The Engineer for the Owner.

FINAL BACKFILL: Material used to replace material removed from trenches during construction which is above the initial backfill (See Figure 100.01).

FORCE MAIN: A pipe that carries wastewater under pressure from a lift station.

FOUNDATION: The supporting material upon which the bedding is placed.

FOUNDATION DRAINS: Any network of pipes, pumps or drainage mechanism located at, near, or under a footing, foundation or floor slab of

any building or structure that intentionally or unintentionally conveys groundwater away from a building or structure.

HAUNCHING: The area in the trench from the top of the bedding to the springline of the pipe. (See Figure 100.01).

HORIZONTAL DIRECTIONAL DRILLING (HDD): Trenchless construction method for installing sewer pipe.

INFILTRATION/INFLOW (I/I): The total quantity of water from both infiltration and inflow without distinguishing the source.

INITIAL BACKFILL: Material used in the trench above the haunching. (See Figure 100.01).

LAND SURVEYOR: A person registered as a land surveyor by the Indiana State Board of Registration as provided by IC 25-21.5.

LATERAL: A pipe used for transporting waste from the building to the public or private sewer commencing at and including the cleanout, and ending at and excluding the wye or tee fitting at the connection to the sanitary or combined sewer. Same as Building Sewer.

LATERAL CONNECTION: Shall mean the point in which a lateral is connected to a sanitary or combined sewer.

LIFT STATION: Any arrangement of pumps, valves and controls that lift, and/or convey wastewater to a higher elevation. Same as Pump Station.

LOW PRESSURE SYSTEM: A wastewater collection system in which multiple users pump wastewater into a common force main.

MANHOLE: A structure used in a sewer system to provide access for maintenance.

MANUAL: Citizens Energy Group Sanitary Standards

MANUFACTURER: The producer of those materials required by this Manual having direct responsibility and authority for the satisfaction of those minimum material specifications set forth herein.

NEW CONNECTION: Shall mean a new lateral connection to the CWA Authority and/or Citizens Westfield sewer system, or a repair, replacement or modification to an existing lateral that increases the capacity of the lateral to accommodate a proposed increase in the average daily flow.

OWNER: Any individual, partnership, firm, corporation or other entity who, as property owner, is initiating the Work.

PERMIT: Clearance to perform specific work under specific conditions at specific locations.

PIPE JACKING: Trenchless construction method for installing sewer pipe.

PLANS: Construction plans which show the location, character, dimensions, and details of the work to be done.

PRIVATE SEWER: Any sanitary sewer facility that is not dedicated as public.

PROFESSIONAL ENGINEER: A person registered as a professional engineer by the Indiana State Board of Registration for Professional Engineers under IC 25-31.

PUBLIC SEWER: Any sanitary sewer facility owned, operated, and maintained by the CWA Authority and/or Citizens Westfield.

PUMP STATION: An alternate term for a Lift Station. See Lift Station definition.

RECORD DRAWING (AS-BUILTS): Plans certified, signed and dated by a professional engineer or land surveyor registered in the State of Indiana, indicating the Plans have been reviewed and revised, if necessary, to accurately show all as-built construction and installation details including, but not limited to, key elevations, locations and distances.

RESIDENT PROJECT REPRESENTATIVE (RPR): The lead inspector in the field who is responsible for all field inspection operations.

RESIDENTIAL UNIT(S): Those units generating domestic wastewater.

RIGHT-OF-WAY: All land or interest therein which by deed, conveyance, agreement, easement, dedication or process of law is reserved for or dedicated to the use of the general public, within which the Utility shall have the right to install and maintain sanitary sewer facilities.

SANITARY SEWER: A sewer that conveys wastewater from residences, commercial buildings, industrial plants, and institutions from lateral connections, and to which storm, surface, and ground waters are not intentionally allowed to enter. Commonly referred to as a “sanitary sewer main.”

SANITARY SEWER CONSTRUCTION AGREEMENT: An agreement entered into by Owner/Contractor and the CWA Authority and/or Citizens Westfield requiring the construction of those sewer facilities to be in accordance with the technical and procedural standards of this Manual. This Agreement includes inspection services.

SANITARY SEWER FACILITY: Any sanitary sewer, lift station or other appurtenance used to transport wastewater from its source to the wastewater treatment plant, excluding the lateral.

SERVICE AREA: Any area that contributes, or has the potential to contribute, wastewater to a sanitary sewer facility.

SEWER: A pipe for carrying wastewater (sanitary sewer), storm water (storm sewer) or a combination of both (combined sewer). Wherever in these Standards the word “sewer” is used without distinguishing type, “sewer” shall mean sanitary sewer.

STANDARD DRAWINGS (DETAILS): The drawing of structures, sanitary sewer lines or devices commonly used and referred to on the Plans and in this Manual.

STANDARDS: The Citizens Energy Group Standards. The requirements for the design and construction of sanitary sewer facilities and laterals within the CWA Authority and/or Citizens Westfield as contained herein and all subsequent additions, deletions or revisions. Same as Manual.

STANDARD PROCTOR DENSITY: The maximum dry density of a backfill material as determined by those methods set forth within American Society of Testing and Materials (ASTM) D 698.

STOP WORK ORDER: An order requiring the suspension of the pertinent construction activity for any construction project within the CWA Authority and/or Citizens Westfield.

STORMWATER: Any flow occurring during or following any form of natural precipitation and resulting therefrom.

TEN STATE STANDARDS: Recommended Standards for Sewage Works, latest edition, developed by the Committee of the Great Lakes - Upper Mississippi River Board of State Sanitary Engineers.

UNIFORM PLUMBING CODE (UPC): The Uniform Plumbing Code adopted by the International Association of the Plumbing and Mechanical Officials, current edition.

UTILITY: CWA Authority (Indianapolis) and/or Citizens Westfield

WASTEWATER: A combination of the liquid and water-carried wastes from residences, commercial businesses, institutions and industrial establishments and other sources, together with such groundwater, surface water and stormwater as may be present.

WATERBODY: Any area that in a normal year has water flowing or standing above ground to the extent that evidence of an ordinary high-water mark is established.

WORK: All the activities to be done under the permit, in accordance with the approved plans, specifications, these Standards, and conditions.

101.05 Enforcement of Standards

Failure to comply with requirements set forth by this Manual may necessitate one or more of the following actions to be taken by the Director- Underground Engineering & Construction:

1. Posting of a Stop-Work-Order;

2. The invoking of performance sureties; (**Not applicable in Westfield**)
3. Denial of any future permits (either owner, contractor, or both); and/or
4. Necessary legal action by the CWA Authority and/or Citizens Westfield to affect the implementation of the approved plan or restoration of the site.

Section 102 General - Procedures and Requirements for all Permits

102.01 Introduction

This Section provides the procedures and requirements common to both laterals and sanitary sewer facilities.

For specific procedures and requirements related to laterals refer to Section 103.

For specific procedures and requirements related to sanitary sewer facilities refer to Section 104.

All information related to approvals and permits pursuant to this Manual can be tracked on the Citizens Energy Group's Website, www.citizensenergygroup.com. The Department of Metropolitan Development's instructions for tracking the Approvals and Permits can be found on the Department of Business and Neighborhood Services website or by contacting the Department of Business and Neighborhood Services directly. Information regarding Westfield can be found on the website, http://www.citizensenergygroup.com/Citizens-Westfield

102.02 Applicability

Lateral Permits, and Approvals and Construction Permits for sanitary sewer facilities are required to construct, repair, modify, connect, or abandon any lateral or sanitary sewer facility within the CWA Authority and/or Citizens Westfield service territory.

This does not relieve any person from obtaining any and all applicable approvals and permits from other appropriate regulatory agencies.

102.03 Exemptions

Permits and Fees as required by this Chapter must be obtained and paid before the construction of sanitary sewer facilities or laterals in the CWA Authority and/or Citizens Westfield, except for:

1. Sewer construction or lateral permits for which a fee cannot be charged by the municipality because of federal or state law; or

2. Sanitary sewer construction performed by an employee or contractor on behalf of CWA Authority and/or Citizens Westfield.

The fee exclusion only applies to the permit application fees. All other fees associated with the construction, repair, modification, abandonment or connection must be paid.

A sanitary sewer permit is not required for maintenance work performed by or on behalf of the Utility.

102.04 Fees	All applicable fees are based on the Equivalent Dwelling Unit (EDU) as listed in CWA Authority Terms and Conditions Appendix B Miscellaneous Fees and Citizens Westfield Terms and Conditions Appendix A Miscellaneous Nonrecurring Charges. Unless specified, all fees must be paid to CWA Authority, Inc. or Citizens Wastewater of Westfield, LLC. Refer to Section 103.04 for additional information.
102.05 Refunds	Fees paid under this Section will not be refunded except upon written request to the Director- Underground Engineering & Construction and only in instances where the permit was issued in error. However, the Director- Underground Engineering & Construction shall, upon a written request, refund the connection fee paid pursuant to Section 103.04, for an expired permit. **Section 102.05 Not applicable in Westfield.**
102.06 Expiration of Permit	If construction activity has not commenced **within one hundred eighty (180) calendar days** from the date of issuance of the Permit, the Permit shall expire and will no longer be of any force or effect. The Director- Underground Engineering & Construction may however, for good cause shown in a written request to Citizens Energy group, extend the validity of any such Permit for an additional period which is reasonable under the circumstances to allow commencement of the construction activity. In no event shall the extension exceed a period of **sixty (60) calendar days**. If the construction activity has commenced, but only is partially completed, and thereafter, no visible construction activity occurs on the construction site over a period of **one hundred eighty (180) calendar days**, the Permit shall expire and no longer be of any force or effect.
102.07 Transfer of Permit	Refer to Terms and Conditions for information.
102.08 Notice of Change in Permit Information	Refer to Terms and Conditions for information.
102.09 Amendment of Permits and Plans	Refer to Terms and Conditions for information.
102.10 Revocation of Permit or Variance	Refer to Terms and Conditions for information.
102.11 Stop-Work Order	Refer to Terms and Conditions for information.

102.12 Variance Procedures

The Director- Underground Engineering & Construction has the power to modify or waive any requirement found in this Manual or in any regulations promulgated by the Board. A Variance can only be granted if an Applicant for a permit submits a completed Variance Request Form and makes a substantial showing that:

1. The design standard or regulation is unfeasible or unreasonably burdensome; and

2. An alternate plan submitted by the Applicant will achieve the same objective and purpose as compliance with the minimum requirements contained in the Manual, and

3. The alternative plan will not increase the direct cost of operation and/or maintenance to the CWA Authority and/or Citizens Westfield.

Cost to the Applicant shall not be the sole factor used to determine whether the design standards or regulations are unfeasible or unreasonably burdensome.

The Utility will respond in writing within **fourteen (14) calendar** days from receipt of the Variance Request.

If a Variance is requested for any requirement in Chapters 300, 400, 500, or 600, a review may be required with the Utility before a decision can be made. The review requirements shall be determined on a case-by-case basis depending on the complexity of the request. All costs associated with a review are the responsibility of the Applicant.

102.13 Appeals

Any person affected by the exercise of any discretionary authority delegated by this Chapter to any official of the CWA Authority, Inc, including a decision to deny or partially deny a Variance or Permit, and who objects to the decision made or action taken by such official is entitled to appeal the decision. The appeal procedure is as follows:

1. The appeal of such a decision shall be filed with the Director- Underground Engineering & Construction in writing within **twenty-one (21) calendar days** following the date of the decision.

2. If the Director- Underground Engineering & Construction denies the appeal, the appellant may file a written request for a hearing, including a statement of their objections, with the Director- Underground Engineering & Construction who will call the same to the attention of the Board. Such request shall be filed with the Director- Underground Engineering & Construction within **fourteen** (**14) calendar days** from the date of notification by the Director- Underground Engineering & Construction.

3. The appeal hearing shall be scheduled before the Board within **thirty (30) calendar days** after such request is filed. Notice shall be given to the appellant identifying the time, place, and date of the appeal hearing **at least seven (7) calendar days** prior to the scheduled date. The Board may hear any evidence it deems relevant. After the hearing, the Board may confirm, reverse, or modify the decision or action. The order of the Board is final. Such order shall be made **within fourteen (14) calendar days** after the hearing and must be in writing and sent to the appellant.

Section 102.13 Not applicable in Westfield.

Section 103 Laterals - Procedures and Requirements

103.01 Introduction	This Section provides procedures and requirements specific to laterals For general procedures and requirements common to both laterals and sanitary sewer facilities refer to Section 102. For specific procedures and requirements related to sanitary sewer facilities refer to Section 104.
103.02 Responsibility	It shall be the responsibility of the Owner whose property is benefited to make all necessary repairs, extensions, relocations, changes, or replacements thereof and of any accessories thereto for the entire length of lateral, excluding the portion within public easements and right-of-ways unless deemed otherwise by the Utility. These requirements may be altered, modified, or waived, at the discretion of the Utility when it is shown compliance is not possible due to extenuating circumstances.
103.03 Applicability	A Lateral Permit is required to construct, repair, modify, connect, or abandon any lateral within the CWA Authority, Inc and/or Citizens Westfield. Lateral Permits shall not be granted for connections to sanitary sewers not dedicated and accepted in accordance with the provisions contained in Section 105.04 or 105.07 of this Manual. Requirements for Lateral Permits issued for connections to existing private systems shall be determined at the time of application. The Applicant shall supply written permission from the Owner of the private sewer and may be required to comply with the requirements of 105.07. All work and other construction activity performed on or associated with the lateral and its connection to the sewer shall be in accordance with this Manual and the rules and regulations of the Indiana Plumbing Code.
103.04 Connection Fee and EDU Calculation	A fee shall be assessed for all new connections to the sanitary or combined sewer system prior to the issuance of a Lateral Permit. Per the CWA Authority's Terms and Conditions Appendix B Miscellaneous Fees 1. Connection Fee, a baseline fee of $2530 per equivalent dwelling unit (EDU) will be assessed to all new connections to the Sewage Disposal System. A new connection includes new sewer service or modification of an existing sewer service agreement. Replacement or repair of an existing individual building sewer that does not increase the EDU is not a new connection. An EDU shall be determined in accordance with industry standards and reflect the

greater of the actual daily flow requirements (per 327 IAC 3), the area ratio of the water meter size serving a particular user, or such other means deemed appropriate by the Utility. One (1) EDU shall be estimated as equal to 310 gallons per day.

Water/wastewater usage data from similar types of facilities as the proposed is not an accepted method to determine the number of EDU and corresponding connection fees. For the Utility's purpose, one (1) EDU is intended to equal the flow equivalent of one (1) single family home.

A Lateral Connection Fee Calculation Worksheet shall be submitted with the Lateral Permit Application.

New Connections and Connection Fees shall be determined and calculated as follows:

1. New Connections
   a. The following are considered New Connections:

      i. New lateral connections to the sewer system.

      ii. A repair, replacement, or modification to an existing lateral that increases the capacity of the lateral to accommodate a proposed increase in EDU's.

      The connection fee will be charged for the proposed increase in EDU's. This is calculated as the net increase in EDU's based upon new water meter size being installed as part of the project and the existing water meter size.

      Note: If there is not a water meter present to calculate the net increase in EDU's, the Utility will determine by appropriate means the increase in EDU's and the corresponding connection fee.

2. Connection Fees

   Connection fees for single use properties shall be determined using one of two methods: Residential or Non-Residential. Mixed Use properties may need to use both methods.

   The fee for each New Connection shall be calculated as follows:

   CWA Connection Fee = Number of EDU's x $2,530

   Westfield Connection Fee = Number of EDU's x $2,000

A minimum of one (1) EDU shall be used for each New Connection Fee calculation. For New Connections as defined above, the Number of EDU's for each connection shall be determined as follows:

a. Residential Use

Residential use shall be defined as a unit designed for living consisting of at least one bathroom and one kitchen. Examples include but are not limited to single family homes, apartments, condominiums, townhomes, and assisted living facilities.

The number of EDU's per residential connection shall be as follows:

Unit Type	EDU's per Unit
Single Family Home	1.0
Multi-residential Living	0.75[1,2]

[1] For Multi-Residential Living units, the total number of EDU's per connection shall be (Total number of units) x 0.75. The 0.75 multiplier shall only be used when a single lateral serves multiple units.

[2] For Multi-Residential Living units having individual lateralfs for each unit, the number of EDU's shall be one (1) per minimum EDU requirement.

b. Non-Residential Use

Non-Residential Use shall be defined as all other uses not defined as Residential Use.

The number of EDU's per connection shall be based on water meter size as follows:

EDU's based on Water Meter Size			
Water Meter Size, inches	No. of EDU's	Water Meter Size, inches	No. of EDU's
5/8 or 3/4	1.0	4.0	41
1.0	2.5	6.0	92

1.5	5.8	8.0	164
2.0	10	10.0	253
3.0	23	12.0	364

c. Mixed Use

i. For single water metered Mixed Use premises, the residential portion shall be calculated as described per Unit Type above and the non-residential portion shall be one (1) additional EDU per floor where the non-residential use exists. The connection fee shall be the total of both.

ii. For individually water metered Mixed Use premises, the number of EDU's shall be based on each individual water meter size.

2. Credits for Re-developed Premises Previously Connected to the Sewer System

Credits for all previous uses shall ONLY be given when the premise had an active and verifiable sewer connection within the last **TBD** years. An active and verifiable sewer connection is a sewer account for that premise within the Citizens system of record during the time specified.

a. Residential premise

i. A credit for the number of previous EDU's per Unit Type will be applied towards a re-developed residential premise.

b. Non-Residential premise

i. A credit for the number of previous EDU's per Water Meter Size will be applied towards a re-developed non-residential premise.

c. Mixed Use premise

i. For single water metered Mixed Use premises, the residential portion shall be credited as described per Unit Type above and the non-residential portion shall be credited one (1) additional EDU per floor where the non-residential use existed.

ii. For individually water metered Mixed Use premises, the number of credited EDU's shall be based on each individual water meter size.

Note: Credits or refunds will not be given for the removal of a water meter, the installation of a smaller water meter, or a reduction in EDU's.

103.05 Submittal Requirements for a Laterals Permit	Refer to Terms and Conditions for information. (CWA Authority service territory Only) All appropriate fees shall be paid before a Permit will be issued.
103.06 Who May Apply	Refer to Terms and Conditions for information.
103.07 Laterals Inspection Requirements	Refer to Terms and Conditions for information
103.08 Enforcement of Bond	Any action may be initiated in a court of competent jurisdiction relative to the bond provided for in Section 103.06 as follows: 1. The Corporation Counsel of the CWA Authority, Inc and/or Citizens Westfield may initiate proceedings to forfeit a bond: a. As a penalty for repeated Code violations by a contractor, his agents or employees; or b. To indemnify the CWA Authority, Inc and/or Citizens Westfield against any loss, damage, or expense sustained by the CWA Authority, Inc and/or Citizens Westfield by reason of the conduct of the contractor, his agents or employees. 2. A person, partnership or corporation which holds a property interest in the real estate on which work has occurred may bring an action against the bond for expenses necessary to correct code deficiencies therein after written notice of the code deficiency has been given to the contractor and after the contractor has been given a reasonable opportunity to correct performance. If such a person, partnership or corporation prevails in any action brought under this section, they may also be allowed by the court to recover as part of the judgment a sum equal to the aggregate amount of costs and expenses, including attorney's fees based on actual time expended as determined by the court to have been reasonably incurred by the plaintiff for, or in connection with, the commencement and prosecution of such action.

Section 104 Sanitary Sewer Facilities - Procedures and Requirements

104.01 Introduction	This Section provides the procedures and requirements specific to sanitary sewer facilities. For general procedures and requirements common to both laterals and sanitary sewer facilities refer to Section 102. For procedures and requirements specific to laterals refer to Section 103.
104.02 Sanitary Sewer Approval and Construction Permit - General	Refer to Terms and Conditions for information
104.03 Capacity Certification/ Allocation	During the Approval process, the Utility may forward a Capacity Certification/Allocation Letter to IDEM. At the discretion of the Utility, the Applicant may be required to evaluate the downstream system if sufficient information and data are not available from the Utility. Refer to Section 202.10 for the downstream evaluation requirements.
104.04 Submittal Requirements for Approval and Construction Permit	The following are the submittal requirements for a Sanitary Sewer Approval and Construction Permit: 1. Sanitary Sewer Approval To obtain a Sanitary Sewer Approval, the following shall be submitted at the time of application: a. Application An application for a Construction Permit shall be made on a Form furnished by the Utility b. Plans and Specifications Plans and specifications for the construction of sanitary sewer facilities shall be developed by, or under the direction of, a Professional Engineer registered in accordance with IC 25-31-1. All sheets shall include the Professional Engineer's seal, signature, and date plans were certified including any revision dates. At a minimum, the plans and specifications shall include the following:

i. Title Sheet (Project Name, Address, Name and Address of Engineer, Name and Address of Owner, County Location Map, Vicinity Map);

ii. Index Sheet showing the overall sanitary sewer configuration and sheet where the Plan/Profile sheets can be found;

iii. Sewer and/or Lift Station Service Area Map;

iv. Revenue Allowance/Subsequent Connector/Delta Area Map;

v. Site Plan;

vi. Plan/Profile Sheets which include backfill requirements and lateral locations;

vii. Standard Detail Sheets;

viii. Structure/Data Table;

ix. Lift Station Standard Detail Sheets (when applicable);

x. Specifications shown on plans; and

xi. Other sheets as deemed necessary for ensuring conformance to this Manual.

The Plans must conform to the requirements of Citizens Energy Group.

c. Design Calculations

Design calculations shall be submitted on a Design Summary Form furnished by the Utility.

d. Certificate of Sufficiency of Plan

A Certificate of Sufficiency of Plan shall be submitted by a Professional Engineer registered in accordance with IC 25-31-1 on a form furnished by the Utility.

e. Lift Station Submittal Requirements

When applicable, the requirements per Section 502.03 and/or 504.03 shall be submitted.

f. Zoning Commitments

All recorded Zoning Commitments, or Commitments being negotiated, shall be submitted.

Zoning Commitments shall not be justification to violate any provisions of this Manual, or be justification for a Variance. If Zoning Commitments violate any provision of this Manual, contact the Department of Business and Neighborhood Services to determine the necessary steps to amend the Zoning Commitments.

g. Execution of Covenant

The Citizens Energy Group Director- Underground Engineering & Construction (or designee) may require the execution of covenants and/or easements running in from the City of Indianapolis, and County of Marion by the Owner or Owners of such parcel. At a minimum in such cases, the Director- Underground Engineering & Construction shall require that the following covenant be executed by the Owner or Owners of such parcels, and which shall be included in a recorded plat:

i. It is the responsibility of the Owner of any lot or parcel of land within the area of the plat to comply at all times with the provisions of the sanitary sewer construction plan approved by the Utility, and the requirements of all sanitary sewer Construction Permits for the plan issued by the Utility.

ii. Owner further covenants that no building, structure, tree or other obstruction shall be erected, maintained, or allowed to continue on the portion of the owner's real estate in which the easement and right-of-way are granted without express written permission from the Utility. Such permission, when duly recorded, shall run with the real estate. The Utility shall have the right to ingress and egress, for temporary periods only, over the owner's real estate adjoining said easement and right-of-way, when necessary to construct, repair or maintain sanitary sewer facilities.

Any person who violates a covenant required under this Section, and/or the owner of any parcel of land who permits such a violation, who is notified in writing by the Utility that a violation exists, will be given a reasonable period of time, **not to exceed thirty (30) calendar days**, in which to correct such violation. The notice shall specify the nature of the violation and must stipulate a required correction date.

If there has been no activity on the Project during the Approval Process for more than **sixty (60) days**, the Application has expired and shall be resubmitted.

	2. Construction Permit The following shall be submitted to the Utility prior to the issuance of a Construction Permit: a. Preliminary Plat When applicable, the preliminary plat shall be submitted. b. Recorded Easements When required, easements shall be obtained and recorded. c. Written Notification The Citizens Energy Group Director- Underground Engineering & Construction (or designee) may require Applicants to send written notification to property owners whose properties abut the route of the proposed sewer. d. Sanitary Sewer Construction Agreement The Applicant shall execute the applicable Agreement for Construction. e. Payment of Fees **(Not applicable in Westfield)** The Applicant shall pay all applicable fees listed in CWA Authority's Terms and Conditions Appendix B Miscellaneous Fees. f. Additional Information Applications shall include any additional information deemed necessary by the Utility to thoroughly evaluate an application for a Construction Permit and carry out the provisions of this Manual
104.05 Who May Apply for an Approval and Obtain a Permit	Refer to Terms and Conditions for information.
104.06 Who Can Do the Work	Refer to Terms and Conditions. for information

Section 105 Sanitary Sewer Construction Inspection and Acceptance Procedures

105.01 Introduction	This Section provides the procedures and requirements specific to the inspection and acceptance of sanitary sewer facilities. For the requirements for the inspection of laterals refer to Section 103.07.
105.02 General Authority for Investigations and Inspections	Refer to Terms and Conditions for information.
105.03 Construction Inspection Requirements	Refer to Terms and Conditions for information.
105.04 Requirements for Project Acceptance and Dedication	The following shall be submitted and approved prior to a sanitary sewer facility being accepted, lateral permits being issued, and the performance bond being released: 1. Three (3) Year Maintenance Bond The Citizens Energy Group Director- Underground Engineering & Construction (or designee) shall require the posting of a Maintenance Bond by the Contractor, in an amount not to exceed twenty (20%) percent of the contract amount, or subject to the approval by the Director- Underground Engineering & Construction, a provision for maintenance for a period of three (3) years from the date of acceptance by the Utility Said bond shall name the CWA Authority, Inc and/or Citizens Westfield as parties who can enforce the obligations thereunder. 2. Certificate of Completion and Compliance A Certificate of Completion and Compliance, as furnished by the Utility, shall be filed by a Professional Engineer. The Certificate of Completion and Compliance shall be filed within **fourteen (14) calendar days** after satisfactory completion of the tests on the sanitary sewer facility for which a Construction Permit was issued. 3. Final Inspection Documentation The completion of a final inspection and all required Forms which confirm all sanitary sewer facilities have been constructed and tested in accordance with this Manual shall be submitted prior to acceptance.

4. Record (“As-built”) Drawings

   Record ("As built") drawings shall be submitted in accordance with Section 105.05 of this Manual.

5. GIS/IMS Data Submittals

   Submittals shall be made in accordance with Section 105.06 of this Manual.

The original Performance Bond will be released upon acceptance of the sanitary sewer facility. (Not applicable in Westfield)

105.05 Record (“As-Built”) Drawings

As part of the final acceptance process, record drawings of the sanitary sewer facilities shall be submitted to the Utility.

Record Drawings shall be certified by a Professional Engineer or Land Surveyor registered in the State of Indiana. The Record Drawings shall include the following information and all revision dates:

1. Title Sheet;
2. Index Sheet showing the overall sanitary sewer configuration and sheet where the Plan/Profile sheets can be found;
3. Sewer and/or Lift Station Service Area Map;
4. Site Plan;
5. Plan/Profile Sheets;
6. Standard Detail Sheets;
7. Structure/Data Table;
8. Lift Station Sheets (when applicable);
9. Specifications shown on Plans;
10. Structure inverts, pipe inverts and top-of-castings;
11. Horizontal alignment of sanitary sewer and force main pipes, streets, to a minimum accuracy of +/- two (2) feet; and
12. Any other information deemed relevant.

Record Drawings shall be submitted in a digital format.

105.06 Digital Data Submission Standards

As part of the final acceptance process, GIS and IMS data shall be submitted in accordance with the latest version of the Digital Data Submission Standards.

105.07 Dedication of Existing Private Sewers

The Owner of a private sanitary sewer facility may apply to the CWA Authority, Inc and/or Citizens Westfield for dedication of the facility as public, provided the facility is located within the CWA Authority, Inc and/or Citizens Westfield boundaries. An Application shall be submitted on a Form furnished by the Utility.

Dedication of such sewer facilities are subject to all applicable requirements in this Manual or rehabilitated to an acceptable level as determined by the Utility. At the discretion of the Utility the following may be required to determine if the facilities are acceptable or what improvements are necessary to make the facilities acceptable:

1. Proof of legal ownership;
2. Recorded easements;
3. Flow monitoring results;
4. Closed Circuit Television (CCTV) video inspection results;
5. Three (3) year Maintenance Bond;
6. Record Drawings;
7. GIS/IMS Data Submittal; and/or
8. Any other requirements deemed necessary by the Utility.

The Owner of the private sewer facility shall, at their expense, be required to correct any deficiencies or remove any sources of clear water found as a result of any inspection, flow monitoring, CCTV, and/or other related testing.

The Utility may deny acceptance of private sewer facilities with or without cause even if the private sewer facilities meet the requirements contained in this Manual.

CHAPTER 200 DESIGN

Section 201 Lateral Design

201.01 Introduction

This Section provides design requirements specific to laterals.

For design requirements specific to gravity sanitary sewers refer to Section 202.

For design requirements specific to manholes refer to Section 203.

For design requirements specific to lift stations and low-pressure sewer systems refer to Chapter 500.

201.02 General

The design criteria for laterals shall conform to the latest edition of the 675 Indiana Administrative Code (IAC) 16 - Indiana Plumbing Code (IPC) and to these Standards, whichever is more restrictive.

201.03 Prohibited Connections

Except as provided in a written approval issued by the Utility no person shall connect a lateral to a sanitary or combined sewer when the lateral has any of the following sources of clear water:

1. Foundation/footing drains;
2. Sump pumps with or without foundation drains connected;
3. Roof drains;
4. Heat pump discharge;
5. Cooling water; or
6. Any other sources of clear water, such as, but not limited to, yard and/or driveway drains.

201.04 Maximum Number of Building Connections

Common laterals are prohibited.

No more than one (1) building will be permitted to connect to a lateral.

Common laterals for one (1) building with multiple residential or commercial units are also prohibited, except for the following:

1. Apartment or commercial buildings with a single owner.
2. Condominiums or commercial buildings where different floors have different owners.

The intent is to have individually owned residential and commercial units, or units with the potential to be individually owned, served by individual laterals.

Industrial facilities will be evaluated on a case-by-case basis.

201.05 Point of Connection

Laterals shall connect to sanitary or combined sewers at manufactured mainline fittings or terminal manholes.

Saddle connections are only allowed if an existing connection point to the sewer does not exist and shall be installed per Section 402.05.

Saddle connections to Vitrified Clay Pipe (VCP) sewers are not allowed. See Section 402.05 for installation requirements for connections to VCP without manufactured fittings.

Connection requests to existing brick or blocks sewers will be evaluated on a case-by-case basis. If allowed, connection will be made per Section 402.06.

Lateral connections to existing sewers eighteen (18) inches and larger will be reviewed on a case-by-case basis. A separate sewer may be required to be extended from an existing manhole.

No more than three (3) connections to a terminal manhole will be allowed. See Section 403.08 for installation requirements on connections to manholes.

201.06 Size, Depth, and Slope of Lateral

The minimum size, depth and slope of laterals shall be as follows:

1. Pipe size

   The minimum pipe size shall be as follows:

   a. Within the right-of-way or easement - six (6) inches.

   b. Outside the right-of-way or easement - four (4) inches

   c. Sizes greater than 6” must be justified by design flow.

2. Pipe Depth

   The minimum depth from the finished grade to the crown of all laterals shall be as follows:

   a. Within the right-of-way or easement - four (4) feet.

b. Outside the right-of-way or easement - three (3) feet.

3. Pipe Slope

The minimum slope shall be 1.04% (1/8” per foot).

For laterals greater than 6”, the slope may only be reduced if justified by the design flow.

201.07 Location, Length, and Spacing of Lateral

The location, maximum length, and spacing of laterals shall be as follows:

1. Location

The location of the lateral shall be as follows:

a. All properties shall be served from the street or alley side of the property.

b. Where possible, laterals shall not cross abutting properties if the existing gravity sewer can be extended to serve the property.

If crossing an abutting property is unavoidable, laterals shall not cross more than one (1) property. A dedicated easement on the abutting property shall be recorded.

c. Properties to the rear may not be crossed.

d. Laterals shall be located a minimum of five (5) feet from the side property lines.

2. Length

The maximum lengths for laterals are as follows:

a. On-site length – No maximum length. Cleanouts shall be provided per Section 201.08.

b. Offsite Length – One hundred (100) feet.

The off-site length includes the total distance within both the abutting property (if crossed) and the right-of-way.

3. Spacing between adjacent laterals

The minimum horizontal distances between adjacent laterals and their connections are as follows:

a. Laterals on the same side of the street/sewer – ten (10) feet Detail.

   Common trenches for more than one lateral are not allowed, unless the minimum horizontal spacing between laterals can be maintained.

b. Laterals on opposite sides of the street/sewer – four (4) feet.

201.08 Cleanouts Cleanouts shall be installed on all laterals as follows:

1. Location

   At a minimum, cleanouts shall be installed at the following two locations:

   a. A wye cleanout located between eighteen (18) and sixty (60) inches from the building's exterior. The cleanout shall be extended to grade.

   b. If structure is more than twenty (20) feet from the right-of-way, a sweeping tee in grassy/dirt/gravel area one (1) to three (3) feet behind the right-of-way In addition to the required threaded, watertight cover; the cleanout shall be covered with a metal casting with a minimum twelve (12) inch lid to facilitate locating. The casting shall be buried a minimum six (6) and a maximum of twelve (12) inches below finished grade. See Figure 400.10 for detail.

2. Spacing

   Cleanouts shall be spaced a maximum of every one hundred (100) feet.

3. Size

   Cleanouts shall match the size of the lateral pipe up to a maximum of eight (8) inches.

4. Cover Type

   Cleanout covers shall be a threaded-type, water tight and capped at all times. Covers within the paved areas shall be metallic and able to withstand traffic loads.

	Cleanouts installed under concrete or asphalt paving shall be made accessible by yard boxes or extended flush with the paving. See Figure 400.10 for detail. Manholes may not be used in lieu of cleanouts unless the facility has been issued an Industrial Pretreatment Permit by the Utility.
201.09 Minimum Elevation for Gravity Connection	To reduce the occurrence of sewer backups, the lowest floor elevation with gravity service shall be a minimum of one (1) foot above either the first upstream or first downstream manhole casting elevation. See Figure 200.01. If this condition cannot be met due to the natural topography of the area, then either an alternate manhole will be evaluated or the connection to the sewer must be made using a sewage ejector pump system.
201.10 Connections Utilizing an Existing Lateral	When an existing or abandoned lateral is intended to be reused, the Owner and Contractor are responsible for verifying the lateral does not have any defects by means of a CCTV inspection. The record of the inspection shall be maintained by the Owner and Contractor for one (1) year from the date of the inspection. Upon request, the results of the CCTV Inspection shall be submitted to the Utility for review. If the Utility determines the existing lateral has deficiencies, the Owner will be required to either replace the existing lateral per requirements of this Manual, or rehabilitate the lateral per Utility direction. Rehabilitation requirements will be determined on a case-by-case basis.
201.11 Laterals Crossing Drainage Ways	Laterals shall be separated from existing or proposed waterbodies as required by Section 202.07.5. Lateral's crossing proposed or existing lakes, ponds, and/or retention or detention areas (either wet or dry) are prohibited.
201.12 Future Connections	Laterals installed for future connections shall be terminated at the right-of-way or easement and sealed with a manufactured cap/stopper made specifically for the purpose of sealing/capping the end of the sanitary sewer to ensure 100% water tightness. Cleanout

at right-of-way per Section 201.08.1 shall be installed with the sanitary sewer main at the time of construction.

A tracer wire shall be installed per Section 401.07 terminating at a one-half (½) inch metal locator rod at the end of the plugged line to within three (3) feet of the finished grade.

Section 202 Gravity Sanitary Sewer Design

202.01 Introduction

This Section provides design requirements specific to gravity sanitary sewers.

For design requirements specific to laterals refer to Section 201.

For design requirements specific to manholes refer to Section 203.

For design requirements specific to grease traps refer to Section 204.

For design requirements specific to lift stations and low-pressure sewer systems refer to Chapter 500.

202.02 General

Gravity sanitary sewers shall be extended to proposed developments per the Sanitary Sewer Masterplan. The Utility will consider alternate routes for the gravity sanitary sewer extension if the proposed route identified in the Masterplan is impractical, not possible, or a more desirable route is available. The Utility maintains and periodically updates the Sanitary Sewer Masterplan.

202.03 Sanitary Sewer Service Area Study

The Applicant shall prepare a Service Area Study for all proposed sanitary sewer facilities. The intent is to maximize the service area to the greatest extent practical. The Utility will determine if the projected service area has been maximized. The Service Area Study shall include, at a minimum, the following:

1. Service Area Map

   The map shall include, at a minimum, the following information:

   a. Project boundaries;

   b. Projected service area boundaries including the following:

      i. All on-site areas;
      ii. Undeveloped off-site areas excluding floodways and existing waterbodies;
      iii. Developed unsewered off-site areas, such as areas currently served by septic systems; and
      iv. Other areas as deemed appropriate by the Utility.

      The Engineer and Applicant shall not assume the boundaries of the projected service area to be only those areas that can be serviced by gravity sewer extensions. Other areas within the service area may need to be served by a lift station.

c. Elevation contour lines;

d. Existing sanitary sewer facilities with invert and top of casting elevations. As-built information may be used;

e. All relevant topographic information; and

f. Any other information deemed necessary.

All relevant information on the Service Area Map shall be clearly labeled and easy to read. **The Service Area Map shall be included in the Plans.**

2. Design Flow Projections

Design flow projections shall be determined for the entire service area per Section 202.04.

202.04 Design Flow

All sanitary sewer facilities shall be designed to carry the projected design flow from the projected Sanitary Sewer Service Area, as defined in Section 202.03, contributing to each respective reach of the sanitary sewer facility.

The Design Flow shall be calculated as follows:

Design Flow = Average Daily Flow X Peaking Factor

where:

Design Flow = Flow used to design a sanitary sewer facility, gpd.

Average Daily Flow = Estimated average daily flow, gpd.

Peaking Factor = Ratio of peak hourly flow to average daily flow.

The above variables shall be calculated as follows:

1. Average Daily Flow (ADF)

The ADF shall be the total ADF from the entire Service Area. Each area shall be calculated as follows:

a. Proposed Developments

The ADF for proposed residential developments shall be determined using the following flow rates multiplied by the number of units:

Unit Type	Flow, gpd
Single Family Home	310
One Bedroom Apartment/Condominium	200
Two Bedroom Apartment/Condominium	300
Three Bedroom Apartment/Condominium	350

For additional Residential-type, Commercial, Industrial, and all other land uses refer to Appendix B in these Standards for the ADF.

If a land use being proposed is not included in either Appendix B in these Standards or 327 IAC Article 3, engineering judgment may be used to estimate the flow. The Utility reserves the right to determine the appropriateness or applicability of the estimated flow.

b. Developed Unsewered Off-site Areas

The ADF for developed unsewered off-site areas may be determined using the same flow rates listed in 202.04.1.a. multiplied by the actual number of unsewered units. The Utility will determine if an alternate method may be used.

c. Undeveloped Off-site Areas

The ADF for undeveloped off-site areas shall be determined by using the greater of the following:

i. Proposed land use as shown in the most recent version of the jurisdictions Comprehensive Plan, or the Westfield Sanitary Master plan, or

ii. Three (3) Single Family Residential Units/Acre (930 gpd/Acre)

2. Peaking Factor

A peaking factor of four (4) shall be used for all calculations unless directed otherwise by the Utility.

Alternate methods to determine the peaking factor such as “Recommended Standards for Wastewater Facilities” latest edition (also known as ‘Ten States Standards’) may be approved on a case-by-case basis.

202.05 Pipe Size, Slope, and Depth

The minimum pipe size, slope, and depth shall be as follows:

1. Pipe Size

   The required diameter of gravity sewers shall be determined by using the Design Flow as calculated in Section 202.04 and Manning's formula using a roughness coefficient, "n", of 0.013 or the pipe manufacturer's recommendation, whichever is greater, and the following:

   a. Minimum pipe diameter - eight (8) inches.

   b. Maximum depth of flow

      i. Pipe diameter up to 18"- three-quarters (3/4) full.
      ii. Pipe diameter 18" and greater-will be established on a case-by-case basis.

2. Pipe Slope

   The minimum and maximum slope shall be as follows:

   a. Minimum Slope

      All sanitary sewers shall be designed and constructed to provide a minimum velocity of 2.0 ft/sec when flowing full.

      The minimum acceptable slopes for the design and construction of sanitary sewers are as follows:

Pipe Size, inches	Minimum Slope (feet per 100 feet, %)
8	0.40
10	0.28
12	0.22
15	0.15
18	0.12
21	0.10
24	0.08
27	0.067
30	0.058
36	0.046
42	0.037
48	0.030
54 and larger	0.026

b. Maximum Slope

Sewers shall not be designed with a slope greater than 20% or a maximum velocity greater than 10.0 ft/sec.

3. Depth

To protect the sanitary sewers from potential damage caused by utilities, the minimum depth to the crown of <u>all</u> gravity sanitary sewers and force mains shall be as follows:

a. Gravity Sewers – 6.5 feet
b. Force mains – 4.5 feet

When the pipe depth is greater than twenty-five (25) feet, the engineer shall verify the pipe material selected is acceptable for the application. Upon request, the Engineer shall submit all calculations verifying the pipe selected is acceptable.

202.06 Extensions for Off-site Unsewered and/or Undeveloped Areas

To accommodate future users within the Sanitary Sewer Service Area, sanitary sewers within the proposed development shall be extended to the property boundaries at the same hydraulic capacity and grade line as the sewers immediately downstream. A reduction of size or slope may be allowed if the off-site design flow projection justifies a reduction. This will be evaluated on a case-by-case basis to make sure future development is not being unduly restricted.

Extensions to all boundaries, including along existing right-of-ways, may be required if multiple contiguous unsewered areas abut the property. This will be evaluated on a case-by-case basis to make sure future development is not being unduly restricted.

202.07 Location of Sanitary Sewer Facilities

All sanitary sewer facilities, both existing and proposed, shall be located to provide adequate access for maintenance and/or repair, and as follows:

1. New Sanitary Sewers

a. New sanitary sewers shall be constructed within the public right-of-way unless directed otherwise by the Utility.

If the right-of-way is not of sufficient width to avoid the granular backfill requirements of Section 401.06.2.b.i., and the sewer is fifteen (15) inches or less in diameter, the sewer may be constructed outside, but within five (5) feet of, the right-of-way within a ten (10) feet wide exclusive sanitary sewer easement. The easement shall

be per Section 204.02.1.

Utilities may encroach into the exclusive sanitary easement, but only for perpendicular crossings (between 45º and 90º). Parallel encroachments (less than 45º) are prohibited without written permission from the Utility. All provisions relating to utility relocations in exclusive sanitary easements contained within Section 204.02 shall apply.

b. When construction within, or within five (5) feet of, the right-of-way is not possible (i.e. crossing undeveloped off-site areas, etc.), the sanitary sewer shall be located in an exclusive sanitary sewer easement as required by Section 204.02 and in such a location to provide adequate access for ease of maintenance and/or repair. The Utility will determine if access is adequate.

c. Sanitary Sewers shall not be located in rear yards or other inaccessible areas unless directed otherwise by the Utility.

2. Existing Sanitary Sewers

a. The proposed development shall be configured in such a manner to provide adequate access to all <u>existing</u> sanitary sewers and manholes for ease of maintenance and/or repair. The Utility will determine if the site configuration provides adequate access.

Acceptable locations for existing sanitary sewer facilities within proposed developments may be as follows:

i. Within common areas;
ii. Within proposed right-of-ways;
iii. Adjacent proposed right-of-ways provided the existing sanitary sewer is in, and remains in, an exclusive sanitary sewer easement; and/or
iv. Others as deemed acceptable by the Utility

b. The proposed subdivision or development shall not be configured in such a manner that would cause existing sanitary sewer facilities to be located in rear yards or other areas determined to be inaccessible by the Utility.

3. Lift Stations

Existing and Proposed Lift Stations shall be located per Section 502.05.

4. Force Mains

   Existing and proposed force mains shall be located per the same requirements as sewers per the above Section 202.07.1 & 2.

5. Adjacent Waterbodies

   All sanitary sewer facilities and laterals shall be separated from existing or proposed waterbodies by a minimum twenty (20) feet horizontally as measured from the outside edge of the sanitary sewer facility to the top of bank.

   Sanitary sewers, force mains, and laterals crossing existing or proposed lakes, ponds, and/or retention or detention areas (either wet or dry) are prohibited.

6. Grease Traps

   A grease trap (interceptor) shall be installed in the waste line leading from sinks, drains and other fixtures or equipment in restaurants, cafes, lunch counters, cafeterias, bars and clubs, hotels, hospitals, factories or school kitchens; or other establishments where grease may be introduced into the drainage or sewage system in quantities that can affect line stoppage or hinder sewage treatment. Grease traps shall be sized according to criteria discussed in Section 204.08.

202.08 Location and Elevation of Sanitary Sewer Facilities within Special Flood Hazard Areas

The elevation and location of sanitary sewer facilities within Special Flood Hazard Areas shall be as follows:

1. Sanitary Sewers and Force Mains

   Sanitary sewers and force mains may be located within Special Flood Hazard Areas, but not within the floodway, unless the location is a perpendicular crossing. Refer to Section 204.06 for design criteria for crossing drainage ways.

2. Manholes

   Manholes may be located within the Special Flood Hazard Area, but not within the floodway.

   The elevation of the top of casting shall be at or above the 25-year flood elevation. The surrounding ground must have a 3:1 slope. If the top of casting elevation is below the 100-

year flood elevation, bolt down castings with watertight, non-rocking/self-sealing covers shall be used per Section 305.11.

3. Lift Stations

   Lift stations shall be fully operational during a 100-year flood and may be located within the Special Flood Hazard Area, but not within the floodway.

   The elevation of the lift station base slab, all above ground equipment, and access drive shall be fully protected and a minimum two (2) feet above the 100-year flood elevation.

202.09 Capacity Certification

For existing and proposed sanitary sewer facilities, the Utility is required to submit Certifications in accordance with 327 IAC 3-6-4 to the Indiana Department of Environmental Management. The required Certifications are limited to additional flow generated as a result of the construction, installation, or modification of sanitary sewers.

When determining if the Certification can be submitted to IDEM, the following factors will be considered when reviewing new sewer connection applications:

1. Capacity of receiving sewer during wet and dry weather, including contractual obligations to reserve future capacity for another party.

2. Compelling public need for the project, such as economic development or conversion of areas currently serviced by septic systems, such as the utility's Septic Tank Elimination Program (STEP) program.

3. Mitigating or offsetting capital, operations, or maintenance projects designed to improve sewer capacity.

A downstream capacity evaluation may be required for the utility to submit the necessary Certification. Refer to Section 202.10 for guidelines for the downstream evaluation.

202.10 Downstream Evaluation

To evaluate the downstream capacity of a receiving sanitary sewer facility, the Utility will rely on the following:

1. Available Data/Information

   Available data/information may include the following:
   a. Existing flow monitoring data;
   b. Sanitary sewer studies;
   c. Maintenance records;

d. Service Requests;
e. Past and/or proposed Capital Improvement Projects; and/or
f. Any other information deemed relevant by the Utility.

2. Additional Data/Information

If adequate data/information is not available, the applicant may be required to conduct; at no cost to the Utility all the necessary tasks to assure the Utility makes an informed decision on the adequacy of the downstream sanitary sewer facilities. Such tasks may include the following:

a. Temporary Flow Monitoring

The requirements for temporary flow monitoring will be determined on a case-by-case basis by the Utility at the time of application. General guidelines include the following:

i. Number of Monitors – The complexity of the downstream system will determine the number of temporary monitors required. The maximum number shall not exceed five (5).

ii. Monitoring Duration – The monitoring duration shall be a minimum of sixty (60) days or until one and one-half (1½) inches of rainfall in a 24-hour period is recorded, whichever is the greater period of time.

iii. Monitoring Period – If possible, part of the monitoring period shall be done during the months of March, April, May, and June. However, if monitoring cannot be done during those months, the Utility will consider an alternate time period.

Monitoring shall not be done during the month of January.

iv. Temporary Rain Gages – Temporary rain gages shall be installed at or near the temporary flow monitoring site(s) during the flow monitoring period unless the monitors are located within one-half (1/2) mile of an operating Utility rain gage. An alternate rainfall measuring method may be approved by the Utility on a case-by-case basis.

v. Flow Monitoring Data and Format – At a minimum, the following shall be included:
(1) Depth / Velocity Hydrographs;
(2) Flow Hydrographs;
(3) Scatterplots / Scattergraphs; and
(4) Any other data deemed necessary

vi. Other requirements as deemed necessary.

b. Hydraulic Modeling
The Utility may require the utilization of the sanitary sewer collection system model to the point of connection of the proposed development. Hydraulic modeling will be performed by the Utility as needed and will be based on the available and additional information noted above. To the extent that necessary data is not available, the Applicant will be required to obtain it.

c. Lift Station System Evaluation
The Utility may require an evaluation of one or more lift station systems. The evaluation may include the following systems:
   i. Hydraulic;
   ii. Electrical;
   iii. Mechanical;
   iv. Instrumentation & Control; and
   v. Others as deemed necessary.

d. Other evaluations as deemed necessary

202.11 Inadequate Downstream Capacity

If the Utility determines downstream capacity is not available for the proposed flow from the development, the Applicant has the following options:

1. Make additional capacity available in the downstream system by:

   a. Increasing the capacity in the system, and/or

   b. Removing a sufficient volume of Infiltration/Inflow.

2. Connecting to an alternate point within the sanitary or combined sewer system. A downstream analysis of the alternate system may be required.

NOTE: This will be evaluated on a case-by-case basis to make sure future development is not being unduly restricted

202.12 Connections to Existing Sanitary Sewers

Sanitary sewers and force mains shall only be connected to the existing sewer system at manholes and shall be per Section 403.08. For lateral connections refer to Section 201.05.

Blind tee connections to existing sewers are prohibited.

If an existing manhole is not available, as determined by the Utility, a new manhole shall be installed as shown in Figure 300.06 and installed per Section 403.

Connections to existing manholes will be evaluated on a case-by-case basis. Rehabilitation may be required and will be at the discretion of the Utility. Rehabilitation methods will be per Section 403.08.

Westfield - Existing manholes receiving a new force main discharge must be lined with SpectraShield or Utility approved equal.

For brick or block manholes, at a minimum, a structural liner approved by the Utility shall be installed prior to the connection of the new sanitary sewer. Brick or block manholes may need to be replaced in lieu of a structural liner.

No more than four (4) connections to existing manholes, three (3) incoming and one (1) outgoing, will be allowed.

202.13 Connections in the Combined Sewer Area

The construction of new combined sewers is prohibited.

When constructing sanitary sewer facilities within the combined sewer area, the Utility will address each application on a case-by-case basis using the following guidelines:

1. Connections to Combined Sewers

   All new or proposed sanitary and storm sewers shall be separated prior to connecting to the combined system. Each system shall be connected individually to the combined sewer if a separate storm sewer is not available. The connections shall be per Section 202.12.

2. Sewer Separation

   To remove stormwater from the combined sewer system, the Utility may require an off-site extension of the proposed storm sewer if an alternate stormwater discharge location is available.

   The following factors shall be considered by the Utility when evaluating the separate storm sewer requirement:

   a. Capacity in receiving sewers to accept stormwater flow, and planned capital improvement projects identified within the Utility's Combined Sewer Overflow (CSO) Long Term Control Plan (LTCP), or other plans;

   b. Impacts on Water Quality;

c. Feasibility of separation, including costs to treat, construct, and manage the sewer system as a separate or combined system; and

d. Other appropriate factors deemed relevant by the Utility.

3. Stormwater release rates to the combined sewer system.

Connecting new storm drainage to the combined sewer system (combined sanitary and storm system) and/or modifying existing storm drainage requires approved evidence and documentation showing there will be ***no increase*** in runoff volume or peak flow entering the combined sewer system.

Any increase in peak flow or volume causes an increased risk of combined sewer overflow frequency and discharge.

The Utility shall review all proposed new connections and modifications of existing drainage connecting to the combined sewer system. This review, along with submitted evidence and documentation, will be used to determine if such connections are permissible.

Section 203 Sewer Structures - Manholes

203.01 Introduction

This Section provides design requirements specific to manholes.

For design requirements specific to laterals refer to Section 201.

For design requirements specific to gravity sewers refer to Section 202.

For design requirements specific to lift stations and low-pressure sewer systems refer to Chapter 500.

203.02 Location

Manholes shall be installed in the following locations:

1. At the end of each sewer segment;

2. At all changes in sewer slope, size, or alignment;

   At changes in sewer alignment and/or sizes, the energy gradient elevation shall not increase by:

   a. Matching the crown elevations when changes in pipe sizes are necessary.

   b. Providing an elevation difference between incoming and outgoing pipe inverts as follows:

      i. For sewer angles between zero (0°) degrees (straight through) to and including ninety (90°) degrees – 0.1 feet minimum;
      ii. Over ninety (90°) degrees – Not allowed.

3. At all sewer segment intersections.

4. In areas that will minimize the potential for I/I entering the sewer system.

   Manholes shall NOT be designed or installed in any drainage path such as, but not limited to, the following locations:

   a. Swales or ditches.

   b. Roadside gutters.

   c. Within 10 feet of inverted crowns of streets.

   d. Low points of paved or unpaved areas.

e. Adjacent stormwater inlets.

f. Other areas the Utility deems necessary.

Cleanouts shall not be used in lieu of manholes.

203.03 Protection against Ponding

To provide protection against ponding, manholes shall be designed and constructed to provide positive drainage away from the top of casting as follows:

1. Paved areas – Top of casting flush with finished grade.
2. Unpaved areas – Top of casting a minimum of three (3) inches above finished grade.

203.04 Maximum Manhole Spacing

The maximum distances between manholes shall be as follows:

Sewer Size, inches	Max. Spacing, feet
12 or less	400
15 – 27	500
30 and larger	600

203.05 Manhole Dimensions

The following Table contains the minimum manhole diameters for sanitary sewer pipes entering or exiting a sanitary sewer manhole at the given range of angles.

Pipe Size, inches	**Minimum Manhole Diameters, inches**		Reference Figure
	Pipes Entering or Leaving at a 45° Angle	Pipes Entering or Leaving at a 46°-90° Angle	
18 or less	48	48	300.01
21-24	48	60	300.02
27	60	72	300.02
30 to 36	60	84	300.02
42	72	96	300.02
48	84	Special Design	300.02*
54 or larger	N/A	N/A	300.03

*Only for straight through pipes otherwise use Figure 300.03

The number and entrance angle of pipe connections, with consideration given to outside pipe diameter(s), shall be limited to those guidelines

established in the previous Table to ensure the structural integrity of the manhole. If at any time the structural integrity of the manhole cannot be maintained, a cast-in-place structure will be required.

203.06 Drop Connections

Drop pipe connections shall be provided for all sanitary sewers or laterals entering a manhole at an elevation twenty-four (24) inches or greater above the invert of the manhole.

Inside or outside drop connections may be used and are shown in Figures 300.04 and 300.05. However, the Utility may require either an inside or outside drop connection, if conditions necessitate. The size of the drop pipe shall be the same size as the incoming sewer.

The Utility may require an increase in the slope of one or more upstream sewer segments or the lateral to eliminate the need for a drop manhole.

When inside drop connections are installed, the minimum inside diameter of the manhole shall be as follows:

Total Number of Drop Lines	Pipe Size, inches	Inside Manhole Diameter, inches
1	8 to 12	60
2 or 3	8 to 12	72

No more than three (3) inside drop connections are allowed in one manhole. The discharge of the drop structure should be extended to the top of the bench.

Sewers larger than twelve (12) inches proposing drop connections will be evaluated on a case-by-case basis.

204.01 Digital Drafting Standards

All plans for sanitary sewer facilities shall be prepared in compliance with industry standards and the latest edition of the Citizens Energy Group Digital Data Submission Standards.

204.02 Easements

When easements are required, they shall be exclusive Sanitary Sewer Easements and shall be dedicated and recorded solely for the benefit of the Utility.

No building, structure, tree, landscaping or other obstruction shall be allowed to be placed, erected, maintained, or allowed to be within any easement dedicated to the Utility.

Exclusive sanitary sewer easements shall not overlap other easements.

Easement boundaries shall be shown on the plans, specifications, and plats as “Sanitary Sewer Easement” in lieu of “Utility Easement.” Common utility easements are prohibited for sanitary sewer facilities.

The minimum permanent easement widths to be dedicated to the Utility are as follows:

1. For sanitary sewers less than twenty-four (24) inches in diameter:

Depth of Sewer	Minimum Width, feet
Up to and including 10 feet	20
Greater than 10 feet to and including 20 feet	30
Greater than 20 feet	40

All sanitary sewers shall be centered in the easement. For those sanitary sewers constructed in the public right-of-way, the easement shall extend the distance outside the right-of-way necessary to provide the required easement width.

If the sewer is located outside, but within five (5) feet of the right-of-way per Section 202.07.1.a. and is fifteen (15) inches

or less in diameter, the exclusive easement is only required to be ten (10) feet wide. The remainder of the required easement width may be shown as a Drainage, Utility, and Sanitary Easement (DU&SE). For sewers greater than fifteen (15) inches in diameter, the exclusive easement width shall be as shown in the above table.

2. For sanitary sewers twenty-four (24) inches and larger

   The easement width will be determined on a case-by-case basis, but shall not be less than a minimum of fifty (50) feet in width.

3. Lift Stations

   The easements for lift stations may, at the discretion of the Utility, be modified on a case-by-case basis, if justified. At a minimum, the easement requirements for lift stations are as follows:

   a. From the base slab – twenty (20) feet in all directions;

   b. From the access drive – ten (10) feet in all directions.

   The lift station easement shall not overlap any other easement.

Except for perpendicular crossings as described in Section 202.07.1.a, utility companies are not allowed to use the sewer easements for the installation of their utility lines without the expressed written permission of the Utility. If permission is granted, utilities shall agree to relocate or support their respective facilities, at no expense to the Utility if the Utility requires access to maintain or repair the sanitary sewer facility.

All site development and plan/profile sheets shall clearly identify the sanitary sewer easement and the location of all existing and proposed utilities. The plan/profile sheets shall also show the location and elevation of existing and proposed utilities, on both plan and profile sections, proposed to cross the sanitary sewer easement.

204.03 Protection of Water Supplies

To protect public and private drinking water supplies, the IDEM, Indiana State Department of Health (ISDH), and Marion County Health and Hospital Corporation (MCH&HC) have established minimum clear distances between sanitary sewer facilities and drinking water supplies. Applicant is responsible for complying with all applicable regulations. Where discrepancies are found between the requirements set forth herein and any other requirements by agencies

having jurisdiction relating to water supplies, the more restrictive requirement shall be followed.

The clear distances shall be as measured from the outside edge of the sanitary sewer facility (sewer, force main, manhole, or lift station) to the outside edge of the water supply (water main or well screen).

The minimum separation distances between sanitary sewer facilities and water supplies shall be as follows:

1. Water Mains

   The minimum separation distance between the following sanitary sewer facilities and existing or proposed water mains shall be as follows:

   a. Sanitary Sewers / Force Mains

      The minimum horizontal and vertical separation distances shall be as follows:

      i. Horizontal Separation – Ten (10) feet

      ii. Vertical Separation – Eighteen (18) inches

         The vertical separation shall only be applicable when sanitary sewers and water mains cross. When crossing, the sewer and water main shall cross at a minimum angle of forty-five (45) degrees as measured from the centerlines of the pipes and maintain the minimum vertical separation a minimum distance of ten (10) feet on either side of the sanitary sewer. The joints of the sanitary sewer shall be equidistant and as far as possible from the water main joints.

      Separation distances less than the above will be considered and may be allowed if all the following conditions are met:

      - The pipe material is pressure rated PVC, Ductile Iron Pipe (DIP), or Prestressed Concrete Cylinder Pipe (PCCP) force main material per Section 304.
      - The sanitary sewer and water main are not in contact.
      - The sanitary sewer joints are compression type and placed equidistant from the water main.
      - The sanitary sewer and water main are laid on separate trench shelves.

b. Manholes – Eight (8) feet

c. Lift Stations – Ten (10) feet

2. Public Water System Drinking Water Wells

The minimum separation distance between the following sanitary sewer facilities and public water system drinking water wells shall be as follows:

a. Sanitary Sewers – Two hundred (200) feet

Sanitary sewers may be located within two hundred (200) feet, but under no circumstances less than fifty (50) feet, from a public water system drinking water well if pressure rated PVC, DIP, or PCCP force main material per Section 304 is used.

b. Manholes – Two hundred (200) feet

c. Lift Stations – Two hundred (200) feet

3. Private Water Supply Wells

The minimum separation distance between the following sanitary sewer facilities and private water supply wells shall be as follows:

a. Sanitary Sewers – Fifty (50) feet

Sanitary sewers may be located within fifty (50) feet, but under no circumstances less than ten (10) feet, from a private water supply well if pressure rated PVC, DIP, or PCCP force main material per Section 304 is used.

b. Manholes – Fifty (50) feet

c. Lift Stations – Fifty (50) feet

204.04 Existing Utility Structures and Facilities

All existing overhead and underground utility lines and existing sewers shall be shown on the plans. Owner shall be responsible to verify the accuracy of utility locates.

204.05 Utility Coordination

It is the responsibility of the Owner or their authorized representative to coordinate with and get approvals from the various governmental agencies having jurisdiction over the work and utilities, including other

	Departments of the Utility for all proposed Work. Further, it is the responsibility of the Owner to get authorization to encroach upon any other utility easement(s) and secure such recorded encroachment as a requirement for dedication of the sanitary sewer facility.
204.06 Sanitary Sewers Crossing Drainage Ways	When crossing streams or rivers, sanitary sewers shall be constructed with DIP or PVC SDR 21, with mechanical joints rated to two hundred (200) psi and backfilled with stone, gravel, or coarse aggregate with a minimum cover depth as follows: 1. Under a Paved Channel – Below the pavement; 2. When located in rock - Twelve (12) inches; or 3. All other areas - Thirty-six (36) inches. The Utility may require cover depths greater than those specified above, if justified.
204.07 Aerial Crossings and Siphons	If possible, siphons and aerial crossings shall be avoided. If not possible, the requirements shall be determined on a case-by-case basis and will be at the sole discretion of the Utility.
204.08 Grease Traps	A grease trap shall be provided for the following: 1. All commercial buildings with food service. 2. All other commercial buildings with fats, oils, and grease greater than twenty-five (25) mg/L. Grease traps shall be: 1. A commercially manufactured grease trap or grease recovery system installed inside the building and sized according to the manufacturer's recommendations and in accordance with the Uniform Plumbing Code. 2. A commercially manufactured grease trap or grease recovery system installed outside the building and sized according to the manufacturer's recommendations. A standard grease trap details is shown as Figure 300.10. Sewage from food service sinks, dishwashers, and kitchen floor drains shall discharge to the grease trap.

The size of the grease trap shall be determined by the following formula:

Grease trap size (in gallons) = M × W × R × S

Where: M = Meals served at peak hour

W = Waste flow rate:

- With dishwashing machine = 6 gallons
- Without dishwashing machine = 5 gallons
- Single service kitchen = 2 gallons
- Food waste disposal only = 1 gallon

R = Retention time:

- With dishwasher = 2.5 hours
- Single service = 1.5 hours

S = Storage factor:

- Fully equipped kitchen, 8 hour operation = 1
- Fully equipped kitchen, 16 hour operation = 2
- Fully equipped kitchen, 24 hour operation = 3
- Single service kitchen = 1.5

Minimum storage capacity shall not be less than one thousand (1,000) gallons and does not need to exceed two thousand (2,000) gallons.

CHAPTER 300 MATERIALS

Section 301 General

301.01 Introduction	This Chapter contains the minimum material requirements for construction of Sanitary sewer facilities within the CWA Authority, Inc and/or Citizens Westfield.
301.02 General for all Materials	The materials used in the construction shall be in full conformance with those guidelines set forth below and according to the applicable ASTM, American Water Works Association (AWWA), and ANSI specifications. These material requirements are minimum requirements and are in part restatements of requirements set forth within the referenced standards, with noted exceptions. The Engineer shall be ultimately responsible for designing and selecting the appropriate material for each specific application. Information from the referenced specifications has been included within this Chapter for the convenience of the reader. However, the engineer, contractor, and manufacturer must also assume the responsibility of familiarizing themselves with these requirements. The CWA Authority, Inc and/or Citizens Westfield will not assume responsibility for noncompliance with the referenced specifications as a result of information not provided in this Manual.
301.03 Material Markings	Each length of pipe and each manhole or other structure shall be marked per the requirements of each respective ASTM, AWWA and/or ANSI standard referenced within this Chapter.
301.04 Certification of Materials	The Utility reserves the right to require material certification from the manufacturer prior to construction to ensure the material supplied conforms to the prescribed requirements. Upon request, the Contractor shall furnish a certificate of conformance to the required ASTM, AWWA, and/or ANSI Standards, this Manual, and other conformance certifications in the form of affidavits of conformance, test results, and/or copies of test reports. Provisions for obtaining this certification shall be the responsibility of the Applicant. The CWA Authority, Inc and/or Citizens Westfield does not assume the responsibility for the expense of obtaining material certification.

301.05 Handling, Storage, and Color	The handling, storage and color requirements for pipe material are as follows: 1. Handling and Storage The manufacturer shall package the pipe in a manner designed to deliver the pipe to the project site neatly, intact, and without physical damage. The transportation carrier shall use an appropriate method to ensure the pipe is properly supported, stacked, and restrained during transport. On-site, the pipe shall be stored on clean, level ground to prevent undue scratching or gouging. 2. Color The pipe exterior may be colored per the manufacturer's standard color scheme with the exception of blue colored pipe or pipe with blue colored markings as well as 2-inch diameter and larger HDPE pipe which must has continuous green stripes to avoid confusion with water pipes.

Section 302 Sanitary Sewer Pipe Material

302.01 Introduction

This Section applies to materials to be used for the construction of gravity sewers.

For materials to be used for laterals refer to Section 303.

For materials to be used for force mains refer to Section 304.

For materials to be used for manholes refer to Section 305.

302.02 Allowable Pipe Materials

The following pipe materials are the only materials that may be used for gravity sanitary sewer installations:

Material	Designation	Max. Depth, ft.[1]	Sizes (Nominal Diameter, in.)	
			Minimum	Maximum
PVC	ASTM D 3034 ASTM F 679 ASTM D 2241 AWWA C900 AWWA C905	25 25 40 40 40	8 18 8 8 14	15 48 36 12 36
Reinforced Concrete Pipe (RCP)	ASTM C 76 ASTM C 655	25[2]	24	144
Ductile Iron Pipe (DIP)	ASTM A 746 AWWA C151	40	8	60
Closed Profile Large Diameter PVC Pipe	ASTM F 1803	25	18	54
Centrifugally Cast Fiberglass Reinforced Polymer Mortar Pipe	ASTM D 3262	40	18	60

Prestressed Concrete Cylinder Pipe (PCCP)	AWWA C301	40	30	144

[1] – The maximum depth is a guideline. Due to the variability of site conditions, the Engineer is ultimately responsible for certifying the pipe selected is acceptable for the depths listed and the specific project application.

[2] – The depth can be increase to forty (40) feet provided the joints and gaskets are designed per ASTM C 361. See Section 302.06.3 for specific requirements.

The individual requirements and specifications for the above pipe materials are listed in the remainder of this Section.

Vitrified Clay Pipe (VCP) for gravity sewer construction is not allowed.

302.03 Polyvinyl Chloride Pipe (PVC)

The minimum requirements for PVC are as follows:

1. Size

   Maximum size – Forty-eight (48) inches

2. Material

   a. Pipe installations up to twenty-five (25) feet deep

      Polyvinyl Chloride (PVC) sanitary sewer pipe and fittings eight (8) inches through fifteen (15) inches in diameter shall be the integral wall bell and spigot-type with elastomeric seal joints and smooth walls conforming to ASTM D 3034 and a minimum of SDR 35.

      PVC sanitary sewer pipe and fittings eighteen (18) inches in diameter and larger shall be smooth wall conforming to ASTM F 679.

      All fittings shall be heavy walled fittings.

      Pipe shall have a minimum pipe stiffness of 46 psi when measured at 5% vertical ring deflection and tested in accordance with ASTM D 2412 and a minimum tensile strength of 34.50 MPa.

b. Pipe installations over twenty-five (25) feet deep

PVC pipe materials shall be ASTM D 2241 (SDR 26 minimum) with minimum cell classification of 12454, AWWA C900 (DR 25 min), or AWWA C905 (DR 25 min).

When pipe conforming to AWWA Standards is used, all fittings shall also be made of PVC.

3. Joints and Gaskets

a. Joints

i. Flexible gasketed joints shall be compression type so that when assembled, the gasket inside the bell will be compressed radially on the pipe spigot to form a watertight seal.

ii. Joints shall be as follows:

- For pipe conforming to ASTM D 3034 and F 679, the joint shall meet the requirements of ASTM D 3212.
- For pipe conforming to ASTM D 2241, AWWA C900, and AWWA C905, the joint shall meet the requirements of ASTM D 3139.

iii. The assembly of joints shall be in accordance with the pipe manufacturer's recommendations.

b. Gaskets

All gaskets shall meet the requirements of ASTM F 477.

Solvent welded joints and coupling joints are not acceptable.

4. Field Cutting of Pipe

All field-cutting of pipe shall be done in a neat, trim manner using a hand or power saw, and the cut end shall be beveled using a file or wheel to produce a smooth bevel of approximately 15° and be a minimum depth of one-third (1/3) the pipe wall thickness or beveled as specifically recommended by the pipe manufacturer. Field cut pipe will only be allowed to be installed at manholes, at prefabricated tees and wyes, and at the connection of new sanitary sewer to existing sanitary sewer.

5. Rejection of Damaged Pipe

   PVC pipe possessing the following defects may be rejected for installation: variation from straight centerline; elliptical shape; illegible markings as required; deep or excessive gouges or scratches of the pipe wall; fractures, punctures, or cracks passing through the pipe wall; and damaged ends where such damage would prevent making a satisfactory joint.

6. Pipe Markings

   For PVC pipe, each length of pipe must be marked per ASTM and AWWA requirements and at a minimum with the following: name of manufacturer, tradename or trademark, nominal pipe size, production/extrusion code, material and cell class designation, ASTM designation, and SDR number.

   In addition, the plain end of each pipe length shall have rings painted around the pipe at the proper location to allow field checking of the correct setting depth of the pipe in the bell.

7. Manufacture and Construction

   a. Pipes

      Pipes shall be manufactured and tested in accordance with appropriate ASTM and AWWA standards to result in a solid wall pipe.

   b. Fittings

      Tees, wyes, and other fittings shall be heavy-walled and capable of withstanding the same stresses as the pipe to which they are connected. All fittings shall be fabricated from pipe meeting the requirements of these standards.

302.04 Closed Profile Large Diameter PVC

The minimum requirements for Closed Profile PVC pipe are as follows:

1. Size

   Maximum Size – Fifty-four (54) inches

2. Materials

   Pipe and fittings shall be made from polyvinyl chloride compounds which comply with the requirements as specified

by ASTM F 1803 with a minimum cell classification of 12364. Minimum pipe stiffness shall be 46 psi when tested in accordance with ASTM D 2412.
The actual inside and outside diameter of the pipes shall be in accordance with current manufacturer's literature, unless otherwise agreed to by the Utility pipe shall be supplied in nominal lengths of fourteen (14) feet unless special sections are needed for construction in which case shorter or longer lengths may be used. Actual laying length shall be nominal plus or minus two (±2) inches.

3. Joints and Gaskets

   All pipe joints shall be of the bell and spigot type with elastomeric seals and conform to the requirements of ASTM D 3212.

   Gaskets shall be factory installed and chemically bonded to the bell end of the pipe. Gasket material shall conform to the requirements of ASTM F 477.

4. Rejection of Damaged Pipe

   Pipe possessing the following defects may be rejected for installation: variation from straight centerline; elliptical shape; illegible markings as required herein; deep or excessive gouges or scratches of the pipe wall; fractures, punctures, or cracks passing through the pipe wall or wall profile; damaged ends where such damage would prevent making a satisfactory joint, voids in the pipe walls, or other noticeable defects in pipe manufacture.

5. Marking

   Each PVC closed profile wall pipe length and fitting shall be clearly marked per ASTM F 1803 and at a minimum with the following: manufacturer's name, nominal pipe size, cell classification, pipe stiffness - 46 PSI, and certification.

6. Manufacture and Construction

   a. Pipes

      Manufacture pipe by the I-beam profile construction process to result in a non-porous, corrosion-resistant, consistent structure.

b. Fittings

Flanges, elbows, reducers, tees, wyes, laterals and other fittings shall be capable of withstanding the same stresses as the pipe to which they are connected. All fittings shall be fabricated from pipe meeting the requirements of these standards. Fabricated miter joints shall be reinforced by fusion heat welding.

Closed Profile Large Diameter PVC Gravity Sewer shall be Lamson Vylon Pipe or an approved equal.

302.05 Centrifugally Cast Fiberglass Reinforced Polymer Mortar Pipe

The specifications herein shall be considered as the minimum requirements for Centrifugally Cast Fiberglass Reinforced Polymer Mortar Pipe. Due to the differing manufacturing processes and strength characteristics between the different manufacturers, the pipe shall be designed for site specific conditions.

The minimum requirements for Centrifugally Cast Fiberglass Reinforced Polymer Mortar Pipe are as follows:

1. Size

   Maximum size – Sixty (60) inches

2. Materials

   Pipe shall be manufactured per ASTM D 3262.

   The actual inside and outside diameter of the pipes shall be in accordance with current manufacturer's literature, unless otherwise agreed to by the Utility.

   Pipe shall be supplied in nominal lengths of twenty (20) feet unless special sections are needed for construction in which case shorter or longer lengths may be used. Actual laying length shall be nominal ± two (2) inches.

   Minimum pipe stiffness shall be 46 psi when tested in accordance with ASTM D 2412.

   Applications which are to be directly jacked into place or micro-tunneled shall utilize pipe configurations specifically designed for jacking or tunneling applications with no protrusions for the joint coupling.

a. Resin Systems

The manufacturer shall use vinylester resin systems for greater chemical resistance. Polyester resin systems with a proven history of performance in resisting sanitary sewerage may only be used with prior written approval from the Utility and then only after the Engineer determines the greater chemical resistance is not needed.

b. Glass Reinforcements

The reinforcing glass fibers used to manufacture the components shall be of commercial grade E-glass filaments with binder and sizing compatible with impregnating resins.

c. Silica Sand

Sand shall be minimum 98% silica with a maximum moisture content of 0.2%.

d. Additives

Resin additives, such as curing agents, pigments, dyes, fillers, thixotropic agents, etc., when used, shall not detrimentally affect the performance of the product.

3. Joints and Gaskets

Fiberglass sleeve couplings that utilize elastomeric sealing gaskets of an appropriate profile shall be the sole means to maintain joint water-tightness. The joints must meet the performance requirements of ASTM D 4161. All joints shall be certified by the pipe manufacturer to perform at fifty (50) feet of hydrostatic head at 5% deflection.

The gaskets shall be made of EDPM elastomeric membrane and shall be resistant to sewage, industrial wastes, and groundwater.

4. Rejection of Damaged Pipe

Pipe possessing the following defects may be rejected for installation: variation from straight centerline; elliptical shape; illegible markings as required herein; deep or excessive gouges or scratches of the pipe wall or liner; fractures, punctures, or cracks passing through the pipe wall; damaged ends where such damage would prevent making a satisfactory

joint, voids in the pipe walls, delamination, cracking and crazing of liner or pipe wall, or other noticeable defects in pipe manufacture.

5. Markings

   Each length of pipe shall be clearly marked per ASTM D 3262 and at a minimum with the following: manufacturer's name, tradename or trademark, nominal pipe size, pipe stiffness, production code, and ASTM number.

6. Manufacture and Construction

   a. Pipes

      Manufacture pipe by the centrifugal casting process to result in a dense, non-porous, corrosion-resistant, consistent composite structure. Pipes shall be tested in accordance with ASTM D 3262. MANDREL PROCESSES TO BUILD UP THE PIPE WALL ARE NOT ALLOWED.

   b. Fittings

      Flanges, elbows, reducers, tees, wyes, laterals, and other fittings shall be capable of withstanding the same stresses as the pipe to which they are connected. They may be contact molded or manufactured from mitered sections of pipe joined by glass-fiber-reinforced overlays. Properly protected standard ductile iron, fusion-bonded epoxy coated steel and stainless steel fittings may also be used.

Centrifugally Cast Fiberglass Reinforced Polymer Mortar Pipe shall be Hobas pipe or an approved equal.

302.06 Reinforced Concrete Pipe (RCP)

The minimum requirements for Reinforced Concrete Pipe are as follows:

1. Size

   Minimum – Twenty-four (24) inches

   Maximum – One hundred forty-four (144) inches

2. Material

a. Reinforced Concrete:

Reinforced concrete pipe shall be in accordance with ASTM C 76. Pipe wall thickness shall be either Wall B or Wall C as appropriate for the size and installation. When deep burial depths are greater than twenty-five (25) feet require an improved joint to resist higher head conditions, joint sections manufactured in accordance with ASTM C 361 with a joint rating of at least fifty (50) feet shall be incorporated.

When special conditions exist and as authorized by the Utility, reinforced concrete pipe manufactured in accordance with ASTM C 655 may be used. The minimum D-load design for ASTM C 655 pipe shall be 1000 and the minimum increment of D-load shall be at least 200, if multiple pipe designs are proposed on a single project.

For pipe designed in accordance with ASTM C 76 or C 655, factors of safety shall be 1.5 for D-loads of 2000 and less, 1.25 for D-loads of 3000 and higher and uniformly decreasing between 1.5 and 1.25 for D-loads between 2000 and 3000. The wall thickness shall not be less than the wall thickness used to verify the D-load strength.

b. Steel Reinforcement

Steel reinforcement shall be in accordance with and placed to the requirements of the applicable tables in ASTM C 76, ASTM C 361, or per the approved D-load design. Longitudinal reinforcement shall be continuous and all reinforcement shall have a minimum concrete cover of 1 inch. Minimum cover requirements do not apply to the mating surfaces of the joint, gasket seat, or end of longitudinal. Elliptical reinforcement shall not be permitted.

c. Lift Holes

Lift holes are not allowed.

d. Lining

<u>All</u> reinforced concrete pipes for sanitary sewers shall be factory lined with one of the following materials: T-Lock PVC by Ameron, GSE Studliner by Grundle/SLT

Environmental, Agru Sure Grip by Agru America, or approved equal.

i. Liners shall be completed with heat welded joints at all pipe joints where the liner is discontinuous across the joint. Liner sheets with adhesive backing or other non-heat welded joint overlays are not permitted.

ii. Liner shall be embedded in concrete to withstand a test pull of at least 100 pounds per linear inch, applied perpendicularly to the concrete surface for a period of one minute, without rupture of the locking extensions or withdrawal from embedment. This test shall be made at a temperature of 70-80 degrees Fahrenheit inclusive.

iii. Lining material shall have good impact resistance, shall be flexible, and shall have an elongation sufficient to bridge up to one-quarter (¼) inch settling cracks, which may occur in the joint after installation, without damage to the lining.

iv. The lining shall be repairable at any time during the life of the pipe or structure by heat welding additional materials to the liner.

v. The lining materials shall be resistant to municipal sewage.

3. Joints and Gaskets

All joints for pipes in accordance with ASTM C 76 and ASTM C 655 shall comply with the requirements of ASTM C 443.

Joints and gaskets designated to be in excess of twenty-five (25) feet of head shall be designed in accordance with ASTM C 361.

Only one style of joint system or configuration shall be permitted between adjacent manholes.

4. Rejection of Damaged Pipe

Pipe possessing the following defects may be rejected for installation: variation from straight centerline; elliptical shape; illegible markings; fractures in excess of 0.01 inch or cracks passing through the pipe wall; damaged ends where such damage would prevent making a satisfactory joint, voids and/or honeycombing in the pipe walls, delamination of pipe liner, cracking and crazing of liner, or other noticeable defects in pipe or liner manufacture.

5. Marking

   All markings required by the appropriate ASTM specification shall be legibly marked on each section of pipe.

6. Manufacturer and Construction

   Manufacture and test pipe sections in accordance with ASTM C 76, C 361, or C 655 as appropriate for the strength, class, size, and joint design utilized.

7. Special Shaped Pipe

   Special shaped pipe shall conform to the specifications for straight pipe insofar as applicable. Special design or construction necessary for specials shall be subject to approval by the Utility on a case-by-case basis.

302.07 Ductile Iron Pipe (DIP)

The minimum requirements for DIP are as follows:

1. Size

   Maximum – Sixty (60) inches

2. Materials

   Ductile Iron Pipe shall be centrifugally cast and shall conform to ANSI/AWWA A21.51/C151 and ASTM A 746. Thickness or pressure class requirements of ductile iron pipe may be used for design in the conveyance of sanitary sewage by gravity. The minimum pipe wall thickness allowed shall be Class 250. Weights of pipe fittings shall conform strictly to the requirements of Specifications. The minimum laying lengths shall be eighteen (18) feet.

3. Coatings and Linings

   a. Coatings

      The outside surfaces of the pipe and fittings shall be bituminous-coated complying with ANSI/AWWA A21.51/C151 and ANSI/AWWA A21.10/C110.

   b. Linings

      The inside surfaces of <u>all</u> pipe, fittings, and adapters shall be lined with factory applied Protecto 401® ceramic epoxy lining, or approved equal.

4. Joints

   Mechanical, push on or restrained joints shall be provided. Flanged joints are not allowed for buried applications.

   a. Mechanical joints and accessories shall conform to AWWA C111/ ANSI A21.11. The bolts and nuts shall be corrosion resistant high strength alloy steel.

   b. Ductile iron pipe push-on type joints shall conform to ANSI A21.11/AWWA C111. Fittings shall be ductile iron and shall comply with ANSI Specification A21.10/AWWA C110.

   c. Restrained joints shall be manufactured in accordance with pipe manufacturers' requirements. Locking rings, tabs, inserts, or gaskets with inset steel grips may all be used for gravity sanitary sewer applications.

5. Fittings

   Fittings shall be standardized for the type of pipe and joint specified, and shall comply with ANSI A21.10/AWWA C110.

6. Rejection of Damaged Pipe

   Pipe possessing the following defects may be rejected for installation: variation from straight centerline; elliptical shape; illegible markings as required herein; deep or excessive gouges or scratches of the pipe wall or lining; fractures or cracks in the pipe wall or lining; damaged ends where such damage would prevent making a satisfactory joint, delamination of linings, cracking and crazing of liner, or other noticeable defects in pipe manufacture.

7. Markings

   Each pipe length shall be marked per ASTM A 746 and at a minimum the following: nominal size and class designations for the various classes of pipe and fittings shall be cast onto fittings in raised numerals, and cast or stamped on the outside of each section of pipe. Weights shall be plainly and conspicuously painted in white on the outside of each section of pipe and each fitting after the exterior coating has hardened.

8. Manufacturer and Construction

   Manufacture and test completed pipe sections in accordance with ANSI/AWWA A21.4/C104, ANSI/AWWA A21.51/C151,

ANSI/AWWA A2110/C110 and AWWA C111 (ANSI A-21.11) as appropriate.

302.08 Prestressed Concrete Cylinder Pipe (PCCP)

The minimum requirements for pre-stressed concrete cylinder pipe for gravity applications are as follows:

1. Size

   Minimum Size – thirty (30) inches

   Maximum Size – One hundred forty-four (144) inches

2. Material

   The pipe shall conform to the requirements of AWWA C301. C301 pipe shall be designed in accordance with AWWA Standard C304. The pipe design shall be based on the working pressures, surge pressures, earth cover, and live load criteria provided in the contract documents. The external load design shall be suitable for the installation conditions shown in the project plans.

3. Lining

   All PCCP pipe shall be factory lined with one of the following materials: T-Lock PVC by Ameron, GSE Studliner by Grundle/SLT Environmental, Agru Sure Grip by Agru America, or approved equal.

   a. Liners shall be completed with heat welded joints at all pipe joints where the liner is discontinuous across the joint. Liner sheets with adhesive backing or other non-heat welded joint overlays are not permitted.

   .

   b. Liner shall be embedded in concrete to withstand a test pull of at least 100 pounds per linear inch, applied perpendicularly to the concrete surface for a period of one minute, without rupture of the locking extensions or withdrawal from embedment. This test shall be made at a temperature of 70-80° Fahrenheit inclusive.

   c. Lining material shall have good impact resistance, shall be flexible, and shall have an elongation sufficient to bridge up to one-quarter (¼) inch settling cracks, which may occur in the joint after installation, without damage to the lining.

   d. The lining shall be repairable at any time during the life of the pipe or structure by heat welding additional materials to the liner.

e. The lining materials shall be resistant to municipal sewage.

4. Joints

Steel and rubber gaskets shall conform to AWWA C301.

5. Fittings and Special Sections

Fittings and special pipe sections shall be designed and fabricated to the requirements of the appropriate AWWA standards and AWWA Manual M9 Chapter 8, as applicable.

All required flanges shall conform to AWWA C207 Class D requirements for standard steel flanges corresponding to the pipe working pressures.

The PVC lining in fittings and special sections shall be attached to the mortar lining using methods acceptable to the manufacturer of the lining material.

6. Rejection of Damaged Pipe

Pipe possessing the following defects may be rejected for installation: variation from straight centerline; elliptical shape; illegible markings; fractures in excess of 0.01 inch, cracks passing through the pipe wall; damaged ends where such damage would prevent making a satisfactory joint, voids and/or honeycombing in the pipe walls, or other noticeable defects in pipe manufacture.

7. Marking of Pipe

The inside of each pipe section, fitting, or special pipe section shall be plainly marked with the pipe diameter and pressure class for which the section or fitting is designed. In addition, all fittings and special pipe sections shall be marked with an identifying number or station corresponding to that shown on the layout schedule. All fittings or special sections requiring special field orientation during installation shall be properly marked.

Section 303 Laterals

303.01 Introduction

This Section applies to the materials to be used for the construction of gravity laterals.

For materials to be used for gravity sewers refer to Section 302.

For materials to be used for force mains, including low pressure systems, refer to Section 304.

For materials to be used for manholes refer to Section 305.

303.02 Lateral Materials

The minimum requirements for laterals shall conform to the following:

1. Allowable Pipe Materials:

   The following are the only materials that shall be used for laterals.

Material	Designation	Classification	
PVC	ASTM D 3034	SDR 35	Cell Class 12454 or 12364
PVC	ASTM D 2241	SDR 32.5	Cell Class 12454
PVC	ASTM D 2466	Schedule 40	Cell Class 12454
PVC	ASTM D 2467	Schedule 80	Cell Class 12454
HDPE*	ASTM F 714	DR 17	Hydrostatic Design Basis of 1600 psi

*High Density Polyethylene (HDPE) is only allowed for pipe bursting applications, shall utilize DIPS pipe sizing, and shall have a light reflective interior. Standard black interior lined pipe shall not be accepted.

Vitrified Clay Pipe (VCP) for lateral construction is not allowed.

Note: For low pressure systems, the pipe between the individual house grinder pump unit and the low pressure main is considered a lateral. Only HDPE pipe material is allow to be used in this application. Because the pipe is also considered a

force main, the material requirements, including the tapping sleeve, are shown in Section 304.04

2. Joints

   a. For four (4) inch and six (6) inch laterals, only six (6) inch laterals will be allowed in Westfield

      Joints shall be solvent cement type for PVC or butt fused type for HDPE.

   b. For eight (8) inch and larger laterals

      Joints shall be either flexible gasket push-on type or solvent cement type for PVC or butt fused type for HDPE.

Joints shall be installed in accordance with the manufacturer's recommendations.

Section 304 Force Main Material

304.01 Introduction

This Section applies to materials to be used for the construction of force mains, including Low Pressure Systems.

For materials to be used for gravity sewers refer to Section 302.

For materials to be used for gravity laterals refer to Section 303.

For materials to be used for manholes refer to Section 305.

304.02 Allowable Force Main Material

The following pipe materials are the only materials that may be used for sanitary sewer force main and low pressure system installations:

Material	Designation	
	ASTM	AWWA
Polyvinyl Chloride Pipe (PVC)	D2241	C900 C905
HDPE [1]	D3035 F714	C901 [2] C906[2]
DIP	------	C151
Prestressed Concrete Cylinder Pipe	------	C301*

[1] HDPE is the only allowable pipe material for low pressure systems
[2] Acceptable only if requested as alternate to technical standards

304.03 Polyvinyl Chloride (PVC) Pipe

The minimum requirements for PVC pipe for force mains are as follows:

1. Material

   PVC force main pipe shall conform to ASTM D 2241, AWWA C900 or AWWA C905.

   For ASTM D 2241, the material shall conform to ASTM D 1784, Cell Class 12454 and a hydrostatic design stress of 2000 psi. The minimum pressure class/DR rating shall be Class 200/DR 21.

   For AWWA C900 the material shall conform to ASTM D 1784 for cell class 12454 and a hydrostatic design basis of 4000 psi.

The minimum pressure class/DR rating shall be Class 235/DR 18.

For AWWA C 905 the material shall conform to ASTM D 1784 for cell class 12454 and a hydrostatic design basis of 4000 psi. The minimum pressure class/DR rating acceptable shall be Class 200/DR 21.

2. Joints

   Joints shall be a bell end coupling push-on type with joint restraints as needed.

   Joint restraints shall be Megalug® style mechanical joints for PVC pipe as manufactured by EBAA IRON or approved equal.

   The push-on joint and gaskets shall meet the requirements for ASTM D 3139 and F 477.

3. Fittings

   Fittings shall be restrained joint ductile iron fittings conforming to ANSI A21.10/AWWA C110 and ANSI A21.11/AWWA C111. Restrained joints shall be Megalug® style for PVC as manufactured by EBAA Iron, or approved equal.

4. Rejection of Damaged Pipe

   Pipe possessing the following defects may be rejected for installation: variation from straight centerline; elliptical shape; illegible markings as required herein; deep or excessive gouges or scratches of the pipe wall; fractures, punctures, or cracks passing through the pipe wall; damaged ends where such damage would prevent making a satisfactory joint.

5. Markings

   Each length of pipe must be marked per ASTM and AWWA and at a minimum with the following information: name of manufacturer; tradename or trademark; nominal pipe size; production/extrusion code; material and cell class designation; and ASTM designation.

304.04 High Density Polyethylene (HDPE) Pipe

The minimum requirements for HDPE pipe for force main applications are as follows:

1. Material

   Materials used for the manufacture of HDPE pipe shall be extra high molecular weight, high density ethylene/hexane copolymer PE 4710 resin meeting the requirements of ASTM D 3350 with a cell classification of 445474C for materials in accordance with ASTM F 714, ASTM D3035, AWWA C901, or AWWA C906.Pipe shall be sized in accordance with DIPS. All material shall have a hydrostatic design basis of 1600 psi. The minimum pressure class/DR rating acceptable shall be Class160/DR 11.

   The pipe shall contain no recycled compound except that generated in the manufacturer's own plant from resin of the same specification from the same raw material. All material shall be listed by the Plastic Pipe Industry in the name of the pipe manufacturer and shall be based on ASTM D 2837 and PPI TR-3 testing and validation for samples of the pipe manufacturer's production pipe.

2. Joints

   HDPE pipe shall be joined into continuous lengths on the job-site above ground. The joining method shall be the butt fusion method and shall be performed in strict accordance with the pipe manufacturer's recommendations. Electrofusion shall not be used except as needed to connect adjacent directionally drilled sections which are to be connected in the trench bottom. Mechanical joint adapters are required to mechanically connect the HDPE pipe to the main line.

   Joint restraint to prevent axial separation shall be incorporated into the design of the sleeve or coupling used to connect HDPE pipe plain ends. Internal pipe wall stiffeners must be used when restraining HDPE. The restrained coupling system shall be Series 4800 manufactured by EBAA Iron, Inc. or an approved equal.

3. Fittings

   Fittings shall be either HDPE or ductile iron.

   HDPE fittings shall be manufactured in accordance with ASTM D 3261 by injection molding, a combination of extrusion and machining or fabricated from HPDE pipe conforming to this Standard. Fittings shall be fully pressure rated and provide a working pressure equal to the adjacent pipe with an included two (2) to one (1) safety factor.

Ductile iron fittings shall be restrained joint ductile iron fittings conforming to ANSI A21.10/AWWA C110 and ANSI A21.11/AWWA C111 with MJ Adapters.

4. Rejection of Damaged Pipe

   Pipe possessing the following defects may be rejected for installation: variation from straight centerline; elliptical shape; illegible markings as required herein; deep or excessive gouges or scratches of the pipe wall; fractures, punctures, or cracks passing through the pipe wall; damaged ends where such damage would prevent making a satisfactory joint.

5. Markings

   During the extrusion production, the HDPE pipe shall be continuously marked per ASTM and AWWA with durable printing with at a minimum the following: nominal pipe size, dimension ratio, pressure rating, trade name, material classification, certification bases, and date in white lettering. For diameters 2-inch diameter and larger, pipe shall be marked with continuous green stripes to distinguish it from other utilities

6. Handling and Storage

   In addition to the requirements in Section 301.05, when moving fused sections of pipe, chains or cable type chokers shall be avoided, nylon slings are preferred. Care must be exercised to avoid cutting or gouging the pipe.

7. Tapping Tees for Low Pressure Sewer Systems

HDPE tapping tees for low pressure sewer systems shall be molded electrofusion or heat fusion types manufactured from PE 4710 resin listed with the Plastic Pipe Institute (PPI) as TR-4 and shall meet the specifications of ASTM D 3350, Standard Specification for Polyethylene Plastics Pipe and Fittings Materials.

Electrofusion tees shall be manufactured per ASTM F1055, Standard Specification for Electrofusion Type Polyethylene Fittings for Outside Controlled Polyethylene Pipe and Tubing. Heat fusion types shall be manufactured per ASTM D3261, Standard Specification for Butt Heat Fusion Polyethylene (PE) Plastic Fittings for Polyethylene (PE) Plastics Pipe and Tubing. Tapping tees shall have a minimum pressure rating equal to or greater than the pipe to which they are joined. HDPE welds for 6-inch diameter pipe and larger shall be documented using a data logger.

304.05 Ductile Iron Pipe (DIP)

The minimum requirements for ductile iron pipe for force main applications are as follows:

1. Material

   Pipe shall be centrifugally cast in metal or sand-lined molds and shall conform to ANSI A21.51/AWWA C151. The minimum pipe wall thickness allowed shall be Class 250 for all sizes.

2. Fittings

   Fittings shall be push-on or mechanical joint, iron or ductile iron conforming to ANSI A21.10/AWWA C110.

3. Coatings

   Outside surfaces of the pipe and fittings shall be bituminous-coated complying with ANSI/AWWA A21.51/C151 and ANSI/AWWA A21.10/C110.

   The inside surfaces of <u>all</u> pipe, fittings, and adapters shall be lined with factory applied Protecto 401® ceramic epoxy lining, or approved equal

4. Joints and Gaskets

   Pipe joints shall be push-on type or mechanical-type complying with ANSI A21.11/AWWA C111 unless otherwise noted on the drawings.

   Restrained joints shall be Megalug® by EBAA Iron, Flex-Ring or Lok-Ring by American Pipe, TR-Flex and Field Lok by US Pipe, Snap-Lok or Bolt-Lok by Griffin Pipe, or other similar manufacturer supplied systems.

   Gaskets for mechanical joints, push on joints, and restrained joints shall conform to ANSI A21.11/AWWA C111.

   Anti-corrosion (blue) T-bolts such as Xylan or FluoroKote #1shall be required for MJ fittings.

5. Rejection of Damaged Pipe

   Pipe possessing the following defects may be rejected for installation: variation from straight centerline; elliptical shape; illegible markings as required herein; deep or excessive

gouges or scratches of the pipe wall or lining; fractures or cracks in the pipe wall or lining; damaged ends where such damage would prevent making a satisfactory joint, delamination of linings, cracking and crazing of liner, or other noticeable defects in pipe manufacture.

6. Markings

The size and class designations for the various classes of pipe and fittings shall be cast onto fittings in raised numerals, and cast or stamped on the outside of each section of pipe. Weights shall be plainly and conspicuously painted in white on the outside of each section of pipe and each fitting after the exterior coating has hardened.

304.06 Prestressed Concrete Cylinder Pipe (PCCP)

The minimum requirements for pre-stressed concrete cylinder pipe for force main applications are as follows:

1. Material

The pipe shall conform to the requirements of AWWA C301 or C303. C301 pipe shall be designed in accordance with AWWA Standard C304. C303 pipe shall be designed in accordance with the procedures shown in AWWA Manual M9, Chapter 7. The pipe design shall be based on the working pressures, surge pressures, earth cover, and live load criteria provided in the contract documents. The external load design shall be suitable for the installation conditions shown in the project plans.

2. Joints

Steel and rubber gaskets shall conform to AWWA C-301 or AWWA C-303 as appropriate.

3. Fittings and Special Sections

Fittings and special pipe sections shall be designed and fabricated to the requirements of the appropriate AWWA standards and AWWA Manual M9 Chapter 8, as applicable.

All required flanges shall conform to AWWA C207 requirements for standard steel flanges corresponding to the pipe working pressures.

4. Rejection of Damaged Pipe

   Pipe possessing the following defects may be rejected for installation: variation from straight centerline; elliptical shape; illegible markings; fractures in excess of 0.01 inch, cracks passing through the pipe wall; damaged ends where such damage would prevent making a satisfactory joint, voids and/or honeycombing in the pipe walls, or other noticeable defects in pipe manufacture.

5. Marking of Pipe

   The inside of each pipe section, fitting, or special pipe section shall be plainly marked with the pipe diameter and pressure class for which the section or fitting is designed. In addition, all fittings and special pipe sections shall be marked with an identifying number or station corresponding to that shown on the layout schedule. All fittings or special sections requiring special field orientation during installation shall be properly marked.

Section 305 Manhole Materials and Appurtenances

305.01 Introduction

This Section applies to the materials and specifications for manholes, wet wells, valve vaults, meter vaults and appurtenant structures.

305.02 Precast Sanitary Manholes

Precast manholes, including drop manholes, shall be per Figures 300.01 through 300.06 and the following:

1. Material

   Precast reinforced concrete manholes shall be manufactured, tested, and marked in accordance to ASTM C 478. Manhole sections shall not be installed until at least five (5) days after having been cast unless permitted in writing by the Utility.

2. Joints

   All joints between precast manhole elements (excluding adjusting rings) shall have a rubber gasket per ASTM C 443, and one-half (½) inch diameter butyl rubber rope sealant per ASTM C 990.

3. Lift Holes

   No “see through” lift holes shall be allowed on precast concrete manholes.

4. Rejection of Damaged Manholes

   Manholes possessing any of the following defects shall be subject to rejection:

   a. Fractures or cracks passing through the shell, except for a single end crack that does not exceed the depth of the joint;

   b. Defects that indicate imperfect proportioning, mixing and molding;

   c. Surface defects indicating honeycombed or open profile; damaged ends, when such damage would prevent making a satisfactory joint;

   d. The internal diameter of the manhole section shall not vary more than 1% from the nominal diameter;

   e. Deviations more than one-quarter (¼) inch from the straight edge at any point across the top of the manhole cone

section or riser ring;

f. Visible steel bars along the inside or outside surface of the manhole except for reinforcement stirrups or spacers used to position the cage during manufacture, and reinforcement bars visible at the manhole structure end, provided these reinforcement bar ends are properly grouted in conformance with applicable ASTM specifications; and/or

g. Illegible or unmarked manhole sections not clearly marked with date of manufacture, Tradename, size designation part number, or ASTM number.

5. Other Requirements

Precast manhole cones shall be as follows:

a. Eccentric offset type;

b. The top internal portion of the cone shall have a minimum four (4) inch uniform circumference to accept an internal chimney seal as shown in Figures 300.01 through 300.06; and

c. The top of the cone shall be cast to accept the one of the precast adjusting rings as shown in Figure 300.08.

305.03 Drop Manholes

Inside or outside drop manholes shall be constructed consistent with the requirements of Section 305.02.

305.04 Monolithic (Cast-In-Place) Sanitary Sewer Structures

Monolithic pour structures will be approved on a case-by-case basis provided plans and specifications identifying the concrete mix, steel reinforcement details, pipe connections, and manhole dimensions are submitted and approved prior to construction. Substantial field changes of the approved construction drawings shall be certified by the Engineer, and receive approval of the Utility prior to completion of the proposed work.

305.05 Concrete Bases

Base sections for forty-eight (48) and sixty (60) inch diameter precast manholes shall be constructed with the base and first riser section as one complete integral (monolithic) precast unit.

The concrete base shall be as follows: a minimum of six (6) inch thickness for forty-eight (48) inch diameter structures and a minimum of eight (8) inch thickness for larger diameter structures.

Monolithic pour or precast manholes shall be constructed of Class A concrete having a compressive strength of 4000 psi.

Precast manholes seventy-two (72) inches in diameter and larger with separate base sections shall utilize a gasketed joint between the base section and first riser section.

305.06 Flow Channels and Bench Walls

The channels shall be shaped and formed for a clean transition with proper hydraulics to allow the smooth conveyance of flow through the manholes. The bench wall shall be formed from the invert to a minimum height of 80% of the inside diameter of the inlet and outlet pipes to form a “U” shaped channel. The bench top shall be constructed at a one-half (½) inch per foot slope from the manhole wall. Refer to Figure 300.07 for typical details of flow channels in manholes.

Where a flow channel is constructed as an integral part of the precast base, it shall be shaped and formed as described above, with the exception that the bottom of the flow channel may be formed from the bottom of inlet and outlet pipes if the pipe wall thickness is not greater than one (1) inch.

For cast-in-place flow channels, the bottom invert of all pipes entering a manhole shall be at least three (3) inches above the top of the base slab to the outlet invert so the finished sewer channel may be installed and shaped.

For connections to existing sanitary sewer structures, flow channels shall be shaped as if it were a new manhole.

Grout shall be used to construct a smooth transition from pipe to flow channel.

305.07 Manhole Adjusting Rings

Only concrete adjusting rings are allowed.

Concrete adjusting rings shall conform to ASTM C 478 and be free from voids, cracks, and other defects. The adjusting ring shall be from the same manufacturer as the manhole cone section to assure compatibility and a watertight seal per Figure 300.08.

The minimum thickness of the concrete adjusting ring shall be four (4) inches.

305.08 Steps

Steps shall conform to the requirements of ASTM C 478 and be manufactured using steel rods encased in polypropylene plastic. Steps shall be factory installed when the manhole is manufactured.

Steps shall not be installed in manholes within the Westfield territory.

305.09 Sewer to Manhole Connectors

Sewer pipe connections to manholes shall be made with resilient rubber connectors manufactured in accordance with ASTM C 923.

Connectors shall be secured to the manhole by either being cast-in or connected with an expandable stainless steel band. Connector shall be secured to the pipe with a stainless steel band. The stainless steel elements of the connector shall be totally non-magnetic, Series 305 stainless steel.

The connector shall be the sole element relied upon to assure a flexible, watertight seal from the sewer to the manhole.

The connectors shall be as manufactured by Kor-N-Seal, Press Seal, A-Lok, or approved equal.

305.10 Manhole Chimney Seal

Internal Manhole Chimney Seals shall consist of a flexible internal rubber sleeve, interlocking extensions, and stainless steel compression bands conforming to ASTM C 923.

The seal shall remain flexible throughout a 25-year design life, allowing repeated vertical movement of the frame of not less than two (2) inches and repeated horizontal movement of the frame of not less than one-half (½) inch. The sleeve portion of the seal shall be a minimum double pleated with a minimum unexpanded vertical height of 8, 10, or 13 inches, respectively. The sleeve and extension shall have a minimum thickness of three-sixteenths (3/16) inches and shall be made from a high quality rubber compound conforming to the applicable requirements of ASTM C 923, with a minimum 1500 psi tensile strength, a maximum 18% compression set, and a hardness (durometer) of 48 ± 5.

The area of the seal that compresses against the manhole frame/casting and the chimney/cone shall provide a watertight seal.

The bands shall be fabricated from 16 gauge stainless steel with no welded attachments and shall have a minimum adjustment range of two (2) diameter inches. Any screws, bolts, or nuts used to lock the band in place shall be stainless steel.

The internal seals shall be as manufactured by Cretex Specialty Products, NPC Specialty Products, or an approved equal.

305.11 Casting, Frames and Covers

Castings shall be as follows:

1. Catalog Number

   The frame and cover shall be as follows:

   a. Neenah Regular: R-1772 or Boltdown: R-1772 Gasketed Bolted-, or

   b. East Jordan Iron Works Regular: 1022AGSHD or Boltdown: 1022ZPT.

   All castings shall have a machined bearing surface with Type F concealed pickholes.

2. Markings

   Sanitary sewer manhole covers shall be a solid lid casting as detailed in Figure 300.09. The words “Sanitary Sewer” must be cast in recess letters two (2) inches in height onto solid lid covers.

3. Requirements

   Castings shall be manufactured in accordance with ASTM A 48 - Class 35B, and have a minimum tensile strength of 35,000 psi.

   Boltdown castings shall be provided in Special Flood Hazard Areas.

   Casting shall be of uniform quality, free from blow holes, porosity, hard spots, shrinkage, distortion, or other defects. They shall be smooth and well-cleaned by shot blasting or other approved method.

   All castings shall be manufactured true to pattern; component parts shall fit together in a satisfactory manner. Round frames and covers shall be of non-rocking design or shall have machined horizontal bearing surfaces to prevent rocking and rattling under traffic. All castings shall be fully interchangeable.

Section 401 Installation Requirements Applicable to Sanitary Sewers, Force Mains, and Laterals

401.01 Introduction

This Section provides the minimum installation requirements common to sanitary sewers, force mains, and laterals.

For specific installation requirements for laterals refer to Section 402.

For specific installation requirements for manholes, wet wells, valve vaults, and other appurtenant structures refer to Section 403.

For trenchless installation requirements refer to Section 404.

401.02 Workmanship

The minimum workmanship requirements during construction are as follows:

1. Establishment of Line and Grade

   The Contractor, Engineer, and/or Land Surveyor shall furnish and set all line and grade stakes (HUB).

   A Professional Engineer or Land Surveyor registered in the State of Indiana will be required to set, or oversee the setting of, all bench mark stakes necessary for the installation of any sanitary sewer facility being constructed. Bench marks shall be set in strategic locations within the project to facilitate the installation of grade stakes. Horizontal and vertical control will be required to be provided with record drawings to be submitted to the Utility upon completion of the project.

   The method of establishing and following line and grade in conformance with the approved construction plans may be determined by the Contractor.

2. Material Handling

   Suitable tools and equipment shall be used for the safe and convenient handling of all materials and for the installation of all sanitary sewer facilities. All material shall be unloaded with care. Care shall be taken to prevent pipe coatings, encasements or wrappings from being damaged.

   Each section of pipe shall be carefully examined for cracks and other defects prior to installation. Pipe or fittings found to be cracked, broken, or otherwise defective either before, during, or after installation, shall be removed and replaced with material free from defects.

All pipes, gaskets, and other fittings shall be thoroughly cleaned prior to installation and shall be kept clean during construction.

3. Point of Commencement and Direction of Laying Pipe

The point of commencement for laying pipe should be the lowest point in the proposed line. Provisions for beginning construction at other than the lowest point in the proposed line shall be approved by the RPR. All bell and spigot pipe shall be laid with the bell end, or with the receiving groove end of tongue and groove pipe pointing upgrade or toward the lift station end of force mains.

Each pipe shall be laid on an even firm bed, as required in Section 401.06 throughout its length, so that no uneven strain will come to any single portion of the pipe. Particular care shall be taken to prevent the total load from bearing on the pipe sockets. All bells of bell and spigot pipes shall be carefully placed into a receiving hole excavated into the pipe bedding material.

All pipes shall be properly joined utilizing the manufacturer's assembly marks. Adequate pressure shall be applied to the center of each tongue and groove pipe to ensure the proper joint seal is achieved.

4. Construction Bulkheads

Before extending a sanitary sewer, the Contractor shall provide a watertight bulkhead or seal, in the existing sewer immediately downstream of the point of connection or the most practical location as determined by the RPR. This bulkhead shall be left in place until the new sanitary sewer has been cleaned of all accumulated water and debris and accepted by the Utility.

During all work stoppages in construction of the sanitary sewer, the open face of the last pipe laid shall be plugged with a watertight seal to prevent sand, water, earth, or other materials from entering the pipe.

Whenever pipe and special castings are required to be cut, the cutting shall be done by skilled workers in such manner as to leave a smooth end at right angles to the axis of the pipe without damage to the pipe casting or lining. CUTTING TORCHES SHALL NOT BE USED.

5. Minimum Construction Cover

   Until such time as a minimum of four (4) feet of compacted fill material has been placed over the installed sanitary sewer, lateral, or force main, the Contractor shall not use heavy equipment in such a way as to cause damage to these pipelines or structures.

6. Laying of Pipe in Cold Weather

   The Utility reserves the right to order pipe installation discontinued whenever, in their opinion, there is danger of the quality of work being impaired because of cold weather. The Contractor shall be responsible for heating the pipe and jointing material so as to prevent freezing of joints. No flexible or semi-rigid pipe shall be laid when the air temperature is less than 32° F unless proper precautions, per the manufacturer's recommendations, are taken by the Contractor and the method is approved by the Engineer and the Utility.

   When pipes with rubber gaskets or resilient-type joints are to be laid in cold weather, sufficiently warm the gasket or joint material to facilitate making a proper joint.

   No portion of a sanitary sewer facility shall be installed directly onto frozen ground or backfilled with frozen material.

7. Construction Activities within the Public Right-of Way

   All construction activities within the public right-of-way, including but not limited to surface removal, backfilling, and restoration, shall be per the latest version of the Department of Metropolitan Developments "Regulations for Cuts within the Public Right-of-Way." and the City of Westfield Construction Standards and Specifications or other applicable requirements or the Westfield Standards of Roadway Construction."

401.03 Trench Box and Sheeting

When required by the Occupational Safety and Health Act (OSHA) or any other entity having jurisdiction to protect life, property, or the work, sufficient protective measures shall be utilized in accordance with 29 CFR Part 1926 or any other applicable regulation.

Upon completion of the work, all temporary forms, shores, and bracing, other than as specified herein, shall be removed. The minimum required density of structural backfill shall not be reduced due to trench

box pulling. All voids left by the removal of sheeting shall be carefully filled with properly compacted bedding material.

The Contractor shall employ adequate safeguards to prevent movement of the pipe joint. If movement should occur, the Contractor shall reinstall the pipe.

Any damage to pavement or other structures due to sheeting, shoring, or bracing shall be repaired by the Contractor at his own expense.

Sheeting and bracing which is to remain in place after construction shall be cut off three (3) feet below the finished grade elevation.

The CWA Authority, Inc and/or Citizens Westfield will not assume any liability for the actions of the Owner, Contractor, or their agent(s), in the performance of the required sheeting, shoring, and bracing operations.

401.04 Trench Dewatering

Where groundwater is encountered, the Contractor shall make every practical effort necessary to secure a dry trench bottom prior to laying pipe and/or the installation of the sanitary sewer facility. The Contractor shall provide, install, and operate sufficient trenches, sumps, pumps, hoses, piping, wellpoints or other means necessary to depress and maintain the groundwater level below the base of the excavation. In addition, the dewatering shall be sufficient to stop weeping and running water from displacing soil and entering the trench through the trench walls.

If unable to remove the standing water in the trench, the Contractor shall over-excavate the proposed bottom grade of the sewer bedding, and place not less than six (6) inches of either No. 2 crushed stone, No. 8 crushed stone, or No. 8 fractured faced aggregate in the over-excavated area.

The Contractor shall be responsible for diverting or removing surface runoff and other accumulations of surface water from excavations in compliance with all applicable rules and regulations.

The CWA Authority, Inc and/or Citizens Westfield will not assume any liability for the actions of the Owner, or their agent(s), in the performance of the required dewatering operations.

The Utility shall reserve the right to cease installation activities when trench conditions are not in conformance with this Manual.

Under no circumstances shall surface water and/or groundwater be discharged to, disposed of, or allowed to flow into the CWA Authority, Inc and/or Citizens Westfield sanitary sewer system except as provided in an Industrial Discharge Pretreatment Permit.

401.05 Trench Installations

The minimum requirements for trench installations are as follows:

1. Trench Width

   The minimum width of the trench at and below the top of the sanitary sewer, lateral, or force main shall be only as wide as necessary for proper installation and backfilling.

   The minimum trench width for sanitary sewers, laterals, and force mains shall not be less than the greater of the following:

   Minimum Width = Pipe O.D. + 16 inches

   or

   Minimum Width = (Pipe O.D. x 1.25) + 12 inches

   Under no circumstances shall the distance from the trench wall to the outside edge of the pipe be less than six (6) inches for pipes six (6) inches and less, and eight (8) inches for pipes eight (8) inches and larger.

   For flexible conduits, the lateral resistance of in-situ soils shall be of sufficient stiffness to provide the required pipe support. Where unstable trench sidewall conditions exist, or where trench depth dictates the use of a moveable trench box, the Engineer shall determine the width of compacted bedding and backfill material necessary to provide adequate pipe side support.

   The minimum and maximum trench widths above the top of the sanitary sewer, lateral, and force main shall be determined by the Contractor and shall be in conformance with all applicable safety regulations including, but not limited to, those promulgated by OSHA.

2. General Trenching Requirements

   Whenever pipe trenches are inadvertently excavated below the designed bedding bottom, the Contractor shall fill the

over-excavated area with compacted No. 8 crushed stone or No. 8 fractured face aggregate and shaped to form a firm, uniform trench base.

In cases where a firm foundation is not encountered at the required grade, the Contractor shall remove the unstable material to a sufficient depth not less than six (6) inches and replaced with either No. 2 crushed stone, No. 8 crushed stone, or No. 8 fractured faced aggregate. When compacted and properly shaped, the fill material shall produce a uniform and stable foundation along the entire length of the pipe. If more than one (1) foot of unstable material is encountered, the Contractor shall take additional measures to ensure that additional stabilization is provided, such as geotextile fabric wrapping of the trench section or as approved by the Utility.

All rocks, boulders and stones six (6) inches in diameter and larger shall be removed. Boulders or rocks are not to be used for any portion of the trench backfill.

The pipe trench shall not be excavated more than one hundred (100) feet in advance of pipe laying unless approved by the RPR or Utility

In cases where material is deposited along open trenches, the material shall be placed and protected so that no damage will result to the work or adjacent property as a result of rain or surface wash.

401.06 Bedding and Backfill Requirements

Bedding, haunching, initial backfill, and final backfill requirements are the same for sanitary sewers, laterals, and force mains.

The minimum requirements are shown in Figures 400.01 through 400.03 and are as follows:

1. Bedding, Haunching, and Initial Backfill.

   The requirements are determined by the type and size of pipe being installed and are as follows:

   a. Gravity Flexible Pipe – PVC, HDPE, Centrifugally Cast Fiberglass Reinforced Polymer Mortar, and Closed Profile Large Diameter PVC

Bedding, Haunching, and Initial Backfill – No.8 crushed stone or No. 8 fractured-faced aggregate. The minimum depths shall be as follows:

Pipe Size, inches	Depth Below Barrel, inches	Depth Above Top of Pipe, inches
6 or less	4	4
8 to 15	4	12
18 and larger	8	12

b. Gravity Semi-Rigid Pipe – DIP

Bedding, Haunching, and Initial Backfill – No. 8 crushed stone or No. 8 fractured-faced aggregate. The minimum depths shall be as follows:

Pipe Size, inches	Depth Below Barrel, inches	Depth Above Top of Pipe, inches
8 to 16	4	6
18 and larger	8	6

c. Gravity Rigid Pipe – RCP and PCCP

i. Bedding and Haunching - No. 8 crushed stone or No. 8 fractured faced aggregate a minimum of eight (8) inches below the pipe barrel to the springline (1/2 the outside diameter) of the pipe.

ii. Initial Backfill - Clean fill material free of rocks larger than six (6) inches in diameter, frozen lumps of soil, wood, or other extraneous material unless the construction is within five (5) feet of pavement then Section 401.06.2.b.i. shall apply.

d. Force Mains

For all installations, the bedding material shall be placed in the trench bottom and compacted prior to laying the pipe.

The bell holes shall be excavated for bell and spigot pipe so the entire pipe barrel rests on the bedding. The bedding shall be such that after the pipe has been placed to line and grade, there remains a four (4) inch minimum depth of material below the pipe barrel and a minimum of three (3) inches below the bell.

For all installations, the haunching material shall be shovel sliced or otherwise carefully placed and “walked” or hand tamped to the springline (1/2 the outside diameter) to ensure

compaction of the haunch area and complete filling of all voids. The initial backfill shall be added in six (6) inch lifts “walked” in for compaction.

2. Final Backfill

Final backfill requirements are determined by the location of the excavation and are as follows:

a. Excavations within existing roadways or public right-of-ways.

Final backfill requirements shall be per the latest revision of the Department of Metropolitan Developments “Regulations For Cuts Within The Public Right-of-Way.” and the City of Westfield Construction Standards and Specifications or other applicable requirements

b. For all other installations.

Final backfill requirements are as follows:

i. Within five (5) feet of the edge of pavement, curbs, gutters, or similar structures:

Trenches shall be backfilled with structural “B-Borrow” for structural installations per Indiana Department of Transportation (INDOT) Standard Specifications - Section 211. Backfill shall be compacted to achieve not less than 95% Standard Proctor Dry Density per INDOT Standard Specifications Section 203.23. The Contractor shall use in-house or independent testing to verify proper compaction. The Utility may require independent testing to verify Contractor results at any time during the duration of the project.

Backfill shall be added and compacted in twelve (12) inch balanced lifts by means of mechanical tampers. If the Contractor can demonstrate, through testing, the compaction requirements can be met with lifts greater than twelve (12) inches; it may be approved on a case-by-case basis. The maximum compaction depth shall not exceed six (6) feet.

Flowable fill may be used as a substitute for structural “B-Borrow.”

Westfield – Sanitary Sewers shall be covered with at least twelve (12) inches of bedding material and thirty-six (36) inches of approved backfill.

ii. Outside five (5) feet of the edge of pavement, curbs, gutters, or similar structures:

Trench shall be backfilled with clean fill material free of rocks larger than six (6) inches in diameter, frozen lumps of soil, wood, or other extraneous material.

Jetting or flooding of the backfill shall <u>not</u> be used to meet the compaction requirements.

401.07 Locating (Tracer) Wire

For all force main and lateral installations, a green colored 10-gauge solid copper insulated locating (tracer) wire shall be installed as follows:

1. Force Mains

   Wire shall be installed on top of the initial backfill in one continuous length between the lift station valve vault and the force main discharge manhole.

   The wire shall be brought up to ground level every five hundred (500) feet (maximum) through a #54 Valve Box Section with a D-5 Cover (if in sidewalk or street) or a 3” Box with a 2-1/2” Repair Lid (if in the dirt or grass).

   If any appurtenant structure, such as an air release valve, is required as part of the force main installation, the wire shall be cut with each end entering the structure under the casting frame.

2. Laterals

   Wire shall be installed (taped) on the top of the pipe along the entire length of the lateral from the sewer to the cleanout. The lateral may be installed in either one or two phases. The requirements for each phase are as follows:

   a. One phase

      When the entire lateral is to be constructed in one phase (from the sanitary sewer to the cleanout), the wire shall be installed in one continuous length along the entire length of the lateral. The wire shall be exposed at the cleanout for access.

   b. Two phases

      When the lateral is installed in two phases, the first as part of the sewer construction to the edge of the right-of-way (lateral stub) and the second as part of the building construction from the lateral stub to the cleanout, the wire shall be installed as follows:

i. Lateral as part of the sanitary sewer installation from the sewer to the right-of-way (lateral stub):

Wire shall be installed along the length of lateral beginning at the sanitary sewer and terminating at the stub or locating rod. The wire shall be easily accessible for future extension to the cleanout.

ii. Lateral as part of the building construction from the lateral stub to the cleanout:

Wire shall be connected to the wire at the lateral stub and installed along the remaining length of lateral terminating at the cleanout. The wire shall be exposed at the cleanout for access.

All wire-to-wire connections, such as those for laterals installed in two phases, shall be joined using a DBR Direct Burial Splice Kit as manufactured by 3M Electrical Products Division or a Department approved equal.

Wire Connectors shall be Snake Bite DryConn or Utility approved equal.

401.08 Embankment Installations

For embankment installations, a minimum width of properly compacted bedding and backfill material is required to ensure that adequate stiffness of the pipe envelope is developed.

The Engineer shall determine the minimum embedment width, utilizing those bedding and backfill materials specified herein, in full conformance with those minimum standards set forth by the American Association for State Highway and Transportation Officials Standard Specifications for Highway Bridges, latest revision. Such factors as pipe stiffness, embedment stiffness, nature of in-situ soil, and anticipated construction and service loading shall be evaluated.

401.09 Abandoning Sanitary Sewer Facilities

Sanitary Sewer Facilities shall be abandoned as follows:

1. Combined Sewers, Sanitary Sewers, and Force Mains

   Combined sewers, sanitary sewers, or force mains to be abandoned shall be bulkheaded with mortar and an eight (8) inch thick concrete brick wall. The facility being abandoned shall be filled with sand or cellular concrete and plugged, unless an alternate plan is approved by the Utility

Service shall be maintained within sanitary and combined sewers until the Utility orders bulkheads placed.

No timber bulkheads shall be allowed.

2. Laterals

Numerous existing buildings use common or shared laterals. The Contractor shall determine if the lateral is common/shared prior to construction.

The requirements to abandon laterals, shown in Figure 400.04, are as follows:

a. If the lateral serves one building and is NOT part of a common/shared lateral:

The end of the lateral shall be sealed with a manufactured watertight cap/stopper made specifically for the purpose of sealing/capping the end of a sanitary sewer. The cap/stopper shall be installed per manufacturer's recommendation and in such a way to prevent any source of water from entering the sanitary sewer system. Any device or material that may slide into the lateral and potentially cause a blockage or obstruction in the mainline sewer will not be allowed.

At the cap/stopper, a one-half (1/2) inch cast iron locator rod or magnetic locator tape shall be installed to within three (3) feet of the ground surface to provide for ease of location of the stub.

b. If the lateral serves more than one building and IS part of a common/shared lateral:

i. If at least one service from the common lateral is intended to remain, the connecting fitting for the laterals shall be removed and replaced with an elbow of sufficient angle to provide a smooth transition between the existing portions of the lateral. Elbow shall be a manufactured fitting and shall be installed per manufacturer's recommendation to assure a watertight seal.

ii. If all services from the common lateral are to be abandoned, requirements per Section 401.08.2.a shall apply.

When connections are made between non-similar pipe materials, a non-shear flexible coupling shall be used such as manufactured by Mission, Fernco, or approved equal.

Bedding and backfill requirements for abandoning any lateral shall be per Section 401.06.

3. Structures

Unless otherwise specified, all structures to be abandoned shall be removed to a depth of three (3) feet below the proposed ground elevation, or existing street grade, whichever is lower. The portions of the structure which are abandoned and left in place shall have holes drilled in a sufficient number to allow groundwater to enter and exit. The structure shall be backfilled with sand or B-Borrow and compacted to 95% Standard Proctor Dry Density. The Utility may modify the requirements if deemed necessary.

All existing pipe, equipment, or any other material are the property of the CWA Authority, Inc and/or Citizens Westfield. When abandoning any sanitary sewer facility, the contractor shall contact the Utility to determine if any of the abandoned material is to be salvaged. The determination will be at the sole discretion of the Utility. The Contractor shall deliver all salvageable material and/or equipment to a location within the CWA Authority, Inc and/or Citizens Westfield as determined by the Utility. The Contractor shall be responsible for disposal of all material not being salvaged

For embankment installations, a minimum width of properly compacted bedding and backfill material is required to ensure that adequate stiffness of the pipe envelope is developed.

The Engineer shall determine the minimum embedment width, utilizing those bedding and backfill materials specified herein, in full conformance with those minimum standards set forth by the American Association for State Highway and Transportation Officials Standard Specifications for Highway Bridges, latest revision. Such factors as pipe stiffness, embedment stiffness, nature of in-situ soil, and anticipated construction and service loading shall be evaluated.

Section 402 Installation Requirements Specific to Laterals

402.01 Introduction

This Section provides the minimum installation requirements specific to laterals.

For installation requirements common to sanitary sewers, force mains, and laterals refer to Section 401.

For specific installation requirements for manholes, wet wells, valve vaults, and other appurtenant structures refer to Section 403.

For trenchless installation requirements refer to Section 404.

402.02 General Requirements

Unless specifically stated in this Section, all other installation requirements for laterals shall be per Section 401.

Laterals shall be installed under the same or similar requirements and guidelines as sanitary sewers. Several critical clarifications for certain requirements, not intending to be all inclusive, are as follows:

1. Trench installation requirements, including but not limited to trench widths shall be the same as for sanitary sewers per Section 401.05.

2. Bedding and backfill requirements shall be the same as for sanitary sewers per Section 401.06.

3. Only materials listed in Section 303.02 shall be used for laterals.

4. Connections to sanitary sewers shall be made per Section 201.05.

5. Locating wire shall be installed per Section 401.07.

Typical Lateral Connections are shown in Figures 400.05 and 400.06.

402.03 Lateral Stubs

Laterals are often installed in two phases: the first as part of the sanitary sewer installation, the lateral stub, and the second as part of the lateral installation when the building is constructed.

When installing the portion of the lateral as part of the sanitary sewer installation (the lateral stub), the Contractor shall terminate the lateral at the right-of-way line or easement, and plug the end with a manufactured watertight plug. A one-half (1/2) inch metal locator rod and copper tracer wire per Section 401.07 shall be installed at the end

of the plugged line to within three (3) feet of finished grade to provide for ease of location of the stub.

402.04 Controlled Settlement Joint

A Controlled Settlement Joint, or “Slip Joint”, shall be installed per manufacturer’s recommendation on all lateral riser pipes exceeding five (5) feet in vertical length. Figures 400.06 and 400.07 show a typical installation of the Controlled Settlement Joint and the maximum angle in which the joint should be installed.

Refer to Section 303.03 for the Controlled Settlement Joint material standard.

The riser pipe and fittings shall be bedded per Section 401.06.

402.05 Saddle Connections to Sewers

Saddle connections are only allowed if a manufactured fitting is not available and the sewer is not VCP.

Saddle connections shall be as follows:

1. The connections shall be a seated saddle that will not allow the lateral to protrude into the mainline sewer.

2. The saddle shall have at least two (2) stainless steel bands connecting around the existing sewer.

3. The cut into the existing sewer shall be core drilled. Saw cuts and hammer taps are not allowed.

When a manufactured fitting has not been installed at the time of construction of the main line when connecting to a VCP sewer, the connection shall be made by installing a new PVC manufactured wye fitting. Non-shear couplings shall be used to connect the new manufactured fitting to the existing sewer.

402.06 Connections to Brick Sewers

Connections to brick sewers will be evaluated on a case-by-case basis. Depending on the existing sewer’s condition, rehabilitation may be required as determined by the Utility. Potential rehabilitation work may include lining, replacement, and/or other adjustments necessary.

If the connection is allowed, a concrete collar shall be installed to provide reinforcement to the brick sewer as shown in Figure 400.08. The connection shall be core-drilled after the collar has been installed.

	A rubber connector with a stainless steel clamp meeting the requirements of ASTM C 923 shall be used for the connection. The connector shall be a Kor-N-Tee or approved equal. Once an approved connection is complete, the Contractor will perform a video inspection and provide it to the Utility for review. The Utility will determine if additional rehabilitation work is needed by the Contractor based on the video inspection. If connections to the brick sewer can be avoided, the Utility may require the lateral to be connected to an alternate connection point.
402.07 Connections to Pressure-rated PVC Pipe	When connecting laterals to gravity sewers that use pressure-rated PVC pipe (ASTM D 2241, AWWA C 900, or AWWA C905), adapters may be required to assure proper connection to the sewer. The adapters shall meet the same requirements as the pressure-rated pipe.
402.08 Connections to HDPE Low Pressure Sewer Systems	The installation of HDPE tapping tees for low pressure sewer systems shall be per manufactures recommendations, the latest version of the Plastic Pipe Institute (PPI) Handbook of PE Pipe (https://plasticpipe.org/cart/index.html), the MAB Generic Electrofusion Procedure for Field Joining of 12 Inch and Smaller Polyethylene (PE) Pipe (https://plasticpipe.org/pdf/mab-generic-ef-110515.pdf), and ASTM F2620, Standard Practice for Heat Fusion Joining of Polyethylene Pipe and Fittings. No person shall make a tap on a low pressure sewer system unless that person is qualified for the type of tap to be made. All personnel involved with the installation of the tapping tees shall be trained and certified by the manufacture or manufacturer's representative through a formal training and certification process for the type of tee being used. A certificate or other form of certification shall be made available to the Utility upon request at any time of a project. Fusion equipment and tools must be maintained according to the manufacturer's requirements. Electrofusion or butt fusion equipment that is not maintained can be the cause of installation problems.
402.09 Grinder Pump Installation	The Contractor installing the low pressure system must provide proof that they have been certified by the low pressure system's manufacturer or supplier to install the proposed system

Section 403 Installation of Precast Manholes, Wet wells, Valve Vaults, or other Appurtenant Structures

403.01 Introduction	This Section provides the minimum installation requirements for manholes, wet wells, valve vaults, and other appurtenant structures. For clarity, only manholes are referenced throughout this Section. Unless noted, all other structures are to be installed in accordance with the same requirements. The minimum requirements are show in Figures 300.01 through 300.06.
403.02 Bedding	The bedding for all manholes shall be a minimum of six (6) inches of No. 8 crushed stone or No. 8 fractured-face aggregate. The stone and/or aggregate shall be placed to form a stable base. Where poor or unstable soil conditions exist, or over excavation has occurred, additional No. 8 crushed stone, No. 8 fractured faced aggregate, No. 2 stone, or Class B concrete shall be used to form a stable base.
403.03- Backfilling	Manhole backfilling and compaction requirements shall comply with the minimum requirements for the adjacent sanitary sewer pipe as stated in Section 401.06.
403.04 Placement of Manhole Sections	Precast manhole sections shall be placed and aligned to provide vertical sides. The completed manhole shall be rigid, true to dimensions, and watertight. The joints between manhole sections shall be properly sealed utilizing an approved rubber gasket and butyl rubber rope.
403.05 Placement of Adjusting Rings	Where one (1) solid riser or barrel section cannot be used, final adjustments in elevation of the casting frame and cover shall be accomplished by the use of precast concrete adjusting rings of a minimum thickness of four (4) inches per Section 305.07 and as shown in Figure 300.08. The total number of adjusting rings shall not exceed three (3) and the total height of adjusting rings shall not exceed twelve (12) inches. **Concrete adjustment rings less than four (4) inches thick are not allowed.**

	A water tight seal shall be provided between the cone section of the manhole and adjusting ring, each adjoining adjusting ring, and between the adjusting ring and casting by the use of two (2) rows of one-half (1/2) inch diameter cords of extrudable preformed gasket material, non-asphaltic mastic, or trowelable grade butyl rubber, as shown on Figure 300.08. This material shall be placed in joints and keyways and be of sufficient quantity to completely fill the joint cavity. **The use of brick or block in lieu of adjustment rings is not allowed.**
403.06 Butyl Rubber Backplaster	A trowelable grade butyl rubber base exterior backplaster material one-quarter (1/4) inch minimum thickness, when dry, shall be installed on the outside of the manhole at each joint, extending six (6) inches above and below the joint. It shall also be placed on the chimney section from two (2) inches below the bottom adjustment ring on the cone section to, and covering, the base of the casting.
403.07 Internal Manhole Chimney Seal	Internal Chimney Seals per Section 305.10 shall be installed on the joints of all manholes between the casting frame and the cone section per manufacturer's recommendation.
403.08 Connections To Manholes	Sanitary sewer connections to existing manholes shall be core-drilled and made using a flexible rubber connector per Section 305.09. **Saw cutting and hammer taps are prohibited.** All connections shall provide for a watertight seal between the pipe and the manhole. The connector shall be the sole element relied upon to assure a flexible water tight seal of the pipe to the manhole. When connecting new pipe to existing manholes, a flow channel and bench walls shall be installed per Section 305.06. Depending on the existing manhole's condition, rehabilitation may be required as determined by the Utility. Potential rehabilitation work may include: chimney seals, linings, patches, replacement, and/or other adjustments necessary. If connecting to an existing manhole requires a drop pipe, the Utility will consider request on case-by-case basis. The Utility will provide details if the drop connection is approved.
403.09 Groundwater Monitoring Points	An air pressure test is required for all sanitary sewers. When performing the test, an adjustment to the starting air pressure is required to compensate for groundwater above the top of pipe. The measurement of groundwater is optional. However, this Section provides a recommendation on the number of groundwater monitoring points and their locations.

If the Contractor chooses not to install the groundwater monitoring point(s), the air pressure adjustment shall be the maximum required per Section 602.03 (2.0 psi adjustment, starting air pressure 6.0 psi).

If groundwater monitoring points are installed as part of the project, then one (1) or more monitoring points shall be installed adjacent the manhole(s). The monitoring points may be a three (3) inch diameter PVC pipe, slotted at the bottom with a well screen, located adjacent to the manhole. The elevation of the bottom of the PVC pipe shall be at approximately the same elevation as the top of the highest adjacent sanitary sewer pipe.

The number of monitoring points shall be as follows:

1. If groundwater is <u>not</u> present during pipe installation, one (1) monitoring point is required.

2. If groundwater is present during pipe installation, the number of monitoring points shall be as follows:

Number of Manholes	Number of Monitoring Points
1 – 10	1
11 – 20	2
21 – 30	3
31 – 40	4
41 – 50	5
51 or More	6

The monitoring points shall be installed adjacent to selected manholes and spaced as evenly as possible throughout the project. The Contractor shall submit the locations to the RPR for approval.

If dewatering wells are used during construction to draw down the groundwater elevation, the site shall be considered to have groundwater present.

In both instances, one (1) of the monitoring points shall be installed at the furthest downstream manhole installed as part of the project unless directed otherwise by the RPR. If the development has more than one connection point to existing sewers, the manhole with the lowest invert elevation shall be selected.

Section 404 Trenchless Installation

404.01 Introduction

This Section provides the minimum requirements for the allowable trenchless methods for construction in the CWA Authority, Inc and/or Citizens Westfield

404.02 General Requirements

The following three trenchless methods, with their specific applications, are allowed:

1. Auger Boring and Pipe Jacking (Section 404.03) - All installations.

2. Horizontal Directional Drilling (Section 404.04) – Force main installations.

3. Pipe Bursting (Section 404.05) – Existing lateral rehabilitation.

The use of an alternate method for site specific conditions will be evaluated on a case-by-case basis. At a minimum, the alternate method will be reviewed through the variance process as contained in Section 102.12. At the discretion of the Utility, the alternate method may be required to undergo a thorough evaluation by the Utility before any deviations will be considered. The applicant shall be responsible for all variance and product review fees.

404.03 Auger Boring and Pipe Jacking

The following are the minimum requirements when using boring and jacking installation methods.

1. General

   Boring and jacking will be allowed for the installation of force mains, gravity sanitary sewers, and laterals.

   The casing pipe or jacked pipe shall extend beyond a minimum of a 1:1 slope extending downward and outward from the edge of pavement plus four (4) feet on each end of the bore and jack alignment.

   The Engineer or Applicant shall be responsible for obtaining the necessary agency permits for boring and jacking under highways and railroads.

2. Specific requirements for Carrier, Casing, and Jacking pipes are as follows:

a. Carrier Pipe

Carrier pipe for insertion within casing pipe shall conform to the requirements of Chapter 300 of these Standards and the following requirements:

i. Provisions shall be made to prevent over-homing of joints in all acceptable carrier pipe materials to prevent damage during insertion into the casing pipe. RCP, PCCP, and HDPE do not require such provisions;

ii. All force main pipe shall have restrained joints.

b. Casing Pipe

Casing pipe for installation by jacking and augering shall be steel pipe per ASTM A 139 Grade B and shall have a smooth exterior wall. Additional requirements are as follows:

i. Joints - Pipe joints shall be butt welded with a continuous circumferential weld.

ii. Size - The inside diameter of the casing pipe shall be a minimum of six (6) inches greater than the largest outside diameter of the carrier pipe, bells, or fittings which are placed inside of the casing pipe.

iii. Pipe wall thickness - Minimum pipe wall thicknesses are as follows:

Minimum Wall Thicknesses for Steel Casing Pipe			
Casing Pipe		**Highway Crossing**	**Railroad Crossing**
Nominal Size, in.	**Actual O.D., in.**	**Bare**	**Bare**
8	8 5/8	0.250	0.250
10	10 3/4	0.250	0.250
12	12 3/4	0.250	0.250
14	14	0.281	0.250
16	16	0.281	0.281
18	18	0.312	0.312
20	20	0.312	0.344
24	24	0.312	0.375
30	30	0.375	0.469
36	36	0.469	0.532

42	42	0.500	0.625
48	48	0.500	0.688
54	54	0.500	0.781
60	60	0.563	0.844
66	66	0.625	0.938
72	72	0.688	1.000

NOTE: The Contractor shall conform to the requirements of agencies having jurisdiction over the work, such as INDOT or railroads, where such requirements are greater than those shown above.

c. Jacking Pipe

Jacking pipe shall be used in a one pass method where the jacked pipe acts as the carrier pipe.

Only RCP and centrifugally cast fiberglass reinforced mortar pipe are acceptable for pipe jacking.

RCP and centrifugally cast fiberglass reinforced mortar pipe for jacking shall meet the requirements of Chapter 300 of these Standards and the following:

i. Size - Pipe shall be thirty-six (36) inches in diameter or larger;

ii. RCP shall be Class III or greater and centrifugally cast fiberglass reinforced mortar pipe shall be specifically manufactured for jacking;

iii. RCP and centrifugally cast fiberglass reinforced mortar pipe shall have a constant outside diameter (no bell or joint protrusions);

iv. For RCP pipe, steel reinforcement shall be concentric with the pipe wall, and where required, additional reinforcement shall be provided at the ends of the pipe.

3. Auger Boring and Pipe Jacking Equipment and Construction

The holes shall be bored from the low or downstream end, unless site conditions dictate otherwise.

The Contractor shall provide boring equipment which is capable of advancing the bore hole within the required limits of accuracy and can be adjusted during installation to return to the planned alignment if deviations are discovered.

Installations shall have a bored hole essentially the same diameter as the outside of the installed pipe. If voids develop or if the bored diameter is greater than the outside diameter of the pipe by more than one (1) inch, grouting shall be used to fill such voids.

Provisions for removal of boulders or other large obstructions shall be included without retracting the casing pipe.

When boring in loose, granular, or running soils, the cutting head shall be retracted inside the casing an adequate amount to prevent voiding. For crossings performed in granular materials under the water table, adequate dewatering shall be installed to lower the water table to below the invert of the casing.

All cutting heads shall be removable without retracting the casing pipe.

Following installation, the casing pipe shall be carefully inspected to ensure the carrier pipe can be properly placed.

During placement of the carrier pipe in the casing, the carrier pipe shall be blocked or otherwise supported with casing pipe spacers or wood blocking to secure the proper flow line elevations throughout its full length and to ensure backfilling around the pipe can be done without any displacement or floating.

The annular space between the carrier pipe and the casing pipe shall be completely filled with grout and/or cellular grout with minimum compression strength of 150 psi. Details on the material to be used to fill the void and the method of construction shall be submitted to the RPR.

4. Pipe Jacking Equipment and Construction

Pipe jacking equipment shall meet all the requirements for boring equipment under No. 3 above.

Excavation may be performed by hand milling or with the utilization of a tunnel boring machine (TBM).

When utilizing RCP or centrifugally cast fiberglass reinforced mortar pipe, wood cushion rings or other resilient materials which do not affect joint integrity shall be placed between the

joints and at the thrust rings to prevent point loading of the joints.

The jacked pipe shall be constructed to prevent leakage of the pipe throughout its length.

Soil, earth, and other material removal methods shall be installed, operated, and removed in such a manner that prevents damage to interior linings of jacked pipe. Auger removal of materials is not allowed on lined RCP or centrifugally cast fiberglass reinforced mortar pipe.

5. Unforeseen Obstructions

If an obstruction stops progress of the pipe during installation, the installation method shall be modified to best suit the conditions encountered, except that line and grade may not be changed. Before proceeding, the Contractor shall notify the RPR in writing of the difficulty, diagnosis and proposed procedural modification. If the Contractor proposes abandonment of in-place piping and initiation of a new attempt at an alternate location, such a proposal will be considered only under the following conditions:

a. The Contractor assures the RPR, in writing, that he will perform all proposed work in compliance with applicable laws, regulations, requirements of agencies having jurisdiction, and this Manual.

b. In-place pipe shall be left in place and filled with grout with minimum compression strength of 150 psi.

Note: The contractor may use ASCE, Manuals and Reports on Engineering Practice No. 106, “Horizontal Auger Boring Projects” as a reference.

404.04 Horizontal Directional Drilling (HDD)

The following are the minimum requirements when using the HDD installation method.

1. General

HDD is only allowed for force main construction and only after a detailed review by the Utility of the specific pumping and force main design and installation conditions associated with the project. The Utility concerns are related to the potential for creating unknown high points in the force main as part of the

directional drilling process, which may then accumulate air, and the sensitivity of centrifugal pumps to such air accumulations.

All HDPE pipe shall be cut, fabricated, and installed in strict conformance with the pipe manufacturer's recommendations, or these Standards, whichever is more stringent. Joining, laying, and pulling of HDPE pipe shall be accomplished by personnel experienced in working with HDPE pipe. The pipe supplier shall certify in writing that the Contractor is qualified to join, lay, and pull the pipe. Bore PROFILE is required for HDD installed pipe.

2. Utility Locations

All buried crossing or parallel utilities, including laterals, within ten (10) feet of the proposed alignment shall be accurately located and marked in plan and elevation. If sufficient information is not available from surface techniques, the Contractor shall excavate as required to establish with certainty the location of the utility.

3. Pipe Material

Only smooth-walled HDPE pipe (minimum DR 11) is acceptable per Section 304.04.

All piping system components shall be the products of one manufacturer and shall conform to this Manual and the following:

a. Mechanical connections of the HDPE pipe to auxiliary equipment (pipe or structures) shall be through flanged connections which shall consist of the following:

    i. A polyethylene "stub end" shall be thermally butt-fused to the ends of the pipe.

    ii. Provide ASTM A 240, Type 304 stainless steel backing flange, 125-pound, ANSI B16.1 standard, and gaskets as required by the manufacturer.

    iii. Stainless Steel bolts and nuts of sufficient length to show a minimum of three complete threads when the joint is made and tightened to the manufacturer's standard.

    MJ Adapters may be used when joining HDPE pipe to pipe of other materials.

b. Connections to manholes or other structures shall be restrained from movement by special fittings at each

connection point specifically designed to prevent pullout, or extension into the structures as a result of thermal or other forces.

4. Drilling Fluid

Bentonite, used in the drilling process, shall be environmentally safe.

5. Installation

HDD shall consist of the drilling of a small diameter pilot bore from one end of the alignment to the other, followed by enlarging the hole diameter for the pipeline insertion. It is recommended the pipeline shall be assembled, supported, and pretested prior to installation in the directional drill tunnel. The Contractor shall be required to remove and reinstall the pipeline if the test fails after the inspection.

The pipe shall be joined using the thermal butt fusion method per Section 304.04. The required piping shall be assembled in a manner that does not obstruct adjacent roadways or public activities.

Prior to commencement of drilling operations, drill path shall be surveyed for any surface geo-magnetic variations or anomalies.

Directional drilling machines shall consist of a hydraulically powered system to rotate and push hollow drilling pipe into the ground at a variable angle while delivering a pressurized fluid mixture to a guidable drill (bore) head. The drill pipe shall be a diameter sufficient for the torque and longitudinal loads and fluid capacities required for the work.

A smoothly drilled pilot bore shall follow the design centerline of the pipe profile and alignment described on the construction drawings. The X, Y and Z axis locations relative to the planned alignment and planned elevations shall be monitored along the course of the pilot bore. An electronic guidance system capable of continuously monitoring the location of the drilling head and providing readout of the inclination and azimuth on the drilling head to an accuracy of 1% incline and 1° bearing shall be available and utilized. The indicated pipe elevation from location readings shall be accurate to within 2% of the depth vertically at all depths up to fifty (50) feet in any soil condition including hard rock. Pipe elevation may not be based on the depth below the indicated surface grade on the profile drawings but shall be shown based on surveyed USGS elevations.

The position shall be determined a minimum of once every twenty (20) feet by personnel trained and experienced with electronic guidance systems. All data and readouts pertaining to the position of the bore head and the fluid pressures and flows shall be accessible to the Utility and the RPR at all times. The pilot bore location shall be compared to the designed location to determine the deviation. This information shall be submitted to the RPR for approval prior to pipe installation. Refer to Section 404.04.9, Testing and Inspection, for guidelines on acceptable deviations.

Reaming operations shall be conducted to enlarge the pilot after acceptance of the pilot bore location. The number and size of such reaming operations shall be conducted as the operation dictates but in no case shall the size of the reaming operations result in a hole greater than 150% of the O.D. of the installed pipe. Note: For crossings under INDOT right-of-way, INDOT Specification Section 716 where this method is limited to a maximum reamer size of twenty-four (24) inches unless otherwise approved by INDOT.

The maximum allowable pull exerted on the HDPE pipelines shall be measured continuously and limited to 75% of the maximum allowed by the pipe manufacturer so the pipe or joints are not over stressed. If necessary, the pipelines shall be adequately supported by rollers, skids, slings, or other low friction devices to prevent over stressing, over bending, excessive tensile forces, or buckling during the pullback operation. The method of pipe support shall be part of the Installation Plan which shall be made available to the RPR or Utility upon request.

The HDPE pipe shall at all times be handled in a manner that does not over stress the pipe. Vertical and horizontal curves shall be limited so that wall stresses do not exceed 50% of yield stress for flexural bending of the HDPE pipe. If the pipe is buckled or otherwise damaged, the damaged section shall be removed and replaced. Appropriate steps shall be taken during pullback to ensure that the HDPE pipe will be installed without damage.

When adjacent sections of directionally drilled pipe are to be connected together, the Contractor shall excavate a sufficiently large area at the planned grade to assure the adjoining sections of pipe can be installed without sags or humps. Joining of the pipe shall be performed utilizing butt fused mechanical joint fittings or electrofusion couplings.

6. Locating (Tracer) Wire

All lines installed by HDD shall be provided with a minimum two (2) continuous type TW insulated #8 solid copper tracer wires. The wire shall be installed along the pipe, fastened securely to the pipe at five (5) foot intervals, and terminated above ground with the lead taped around each structure.

The wire shall be brought up to ground level every four hundred (400) feet through a vinyl coated aluminum riser pipe with cap and/or at all line valve boxes. The tracer wires shall be connected using DBR Direct Burial Splice Kit manufactured by 3M Electrical Products Division, Austin, TX or equal. The riser pipe and cap shall not be placed in areas subject to vehicular traffic.

The tracer wire shall be capable of, and demonstrated to have, continuous transmission of tracing signal along the full length of the installed pipe.

7. Environmental Provisions

The Contractor shall be responsible for additional environmental provisions associated with the HDD operation beyond those covered by Section 405.03. The HDD operation is to be operated in a manner to prevent the discharge of water, drilling mud, and cuttings to adjacent creeks or land areas involved during the construction process. Equipment and procedures to maximize the recirculation or reuse of drilling mud to minimize waste may be provided. All excavated pits used in the drilling operation shall be constructed to completely contain the drill fluid and prevent its escape to waterways and/or groundwater.

The Contractor shall be responsible for submitting to the RPR the proposed plan for erosion control/environmental protection. At a minimum the Contractor shall have on site in sufficient quantity equipment (graders, shovels, etc.) and materials (such as groundsheets, hay bales, booms, and absorbent pads) for cleanup and contingencies for use in the event of inadvertent leaks, seeps or spills. Waste drilling mud and cuttings shall be disposed by the Contractor to an approved offsite location.

8. Pipe Relaxation

After the pipe has been installed, allow pipe manufacturer's recommended amount of time, but not less than four (4) hours,

for cooling and relaxation due to tensile stressing prior to hydrostatic testing.

9. Testing and Inspection

The pipe is ONLY required to be hydrostatically tested one (1) time, after the complete installation.

However, to identify any defects prior to installation, the Utility recommends the pipe be hydrostatically tested a total of three (3) times: after joining into continuous pullback sections prior to installation, after installation of each pullback section, and again when all the pullback sections are joined together end-to-end. Hydrostatic testing shall be performed in accordance with Section 603. Any material not passing the hydrostatic testing shall be replaced.

A horizontal tolerance of up to three (3) feet left or right of the planned alignment will be permitted at any point on the alignment provided the pipeline is still within the easement or right-of-way where it was planned.

Tolerances for vertical alignment compared to planned alignment will be judged on a case-by-case basis depending on the location relative to surrounding utilities, creation of new high or low points, required relocation of air/vacuum valves, and the effect on the pumping system curves.

There shall be no allowance for length. The alignment of each pilot bore must be approved by the RPR before pipe can be pulled. If the pilot bore fails to conform to the above tolerances, the RPR may require a new pilot boring to be made.

10. Submittals

The Contractor shall use a data logger during construction and submit a bore profile at the completion of the HDD installation.

The Contractor shall submit data logger information for HPDE weld on 6-inch diameter pipe and larger.

404.05 Pipe Bursting (Lateral Rehabilitation Only)

Pipe bursting shall only be used for lateral rehabilitation/replacement and shall conform to the latest editions of the UPC (IAPMO IS 26-2003) and the following requirements.

1. General

The Contractor shall be certified by the particular pipe-bursting system manufacturer and personnel shall be certified as fusion technicians by a manufacturer of HDPE pipe. Certifications shall be submitted with the lateral application.

The Contractor shall perform a pre-construction Closed Circuit Television (CCTV) inspection to evaluate the condition of the existing pipe and determine whether the pipe-bursting method is a valid alternative for repair. Inspection video shall be made available to the Utility upon request.

2. Materials

   Only HDPE and butt fusion joints per Section 303.02 or 304.04 shall be used for lateral pipe bursting applications.

3. Construction – General

   At a minimum, the Contractor shall adhere to the following requirements during construction:

   a. Defects and Obstructions

      Contractor shall perform all necessary point repairs and remove all obstructions when pre-construction CCTV inspection reveal heavy solids, offset joints, sags in the pipe, or collapsed pipe that will prevent the completion of the pipe bursting process.

      If preconstruction CCTV inspection reveals a sag in the lateral that is greater than one half (1/2) the diameter of the existing pipe, Contractor shall excavate and replace those sections of pipe to result in acceptable grade without the sag.

   b. Utility Location and Required Clearances

      A minimum of one foot of clearance (vertical or horizontal) from the outside edge of the lateral to the outside edge of the utility pipe, wire or structure is required. Contractor shall confirm this clearance exists based on above-ground evidence including utility location marks or as-built drawings.

      Due to the hazards associated with pipe-bursting near natural gas lines, all natural gas lines, including but not limited to distribution mains, transmission mains, and service lines, marked within four (4) feet of the existing lateral shall be uncovered (pot-holed) to confirm the required clearance exists. If the existing gas line is installed parallel and within four (4) feet horizontally to the existing lateral, the gas line shall be uncovered a minimum of once every one hundred (100) feet along the length of the lateral.

c. Pipe Relaxation

After the pipe has been installed, allow pipe manufacturer's recommended amount of time, but not less than four (4) hours, for cooling and relaxation due to tensile stressing prior to reconnecting to the lateral or sewer.

d. Reconnections to Existing Laterals

Connections to existing laterals shall be made with a watertight non-shear coupling such as manufactured by Mission, Fernco, or approved equal.

e. Bedding and Backfill Requirements

Bedding and backfill for all point repairs or connections to the existing lateral shall be per Section 401.06.

4. Post-Construction CCTV Inspection

Contractor shall repair any sections of pipe that do not meet the requirements of this Section. The inspection video shall be made available to the Utility upon request.

404.06 Pipe Lining on Lateral Repairs and Private Sewers

Pipe lining on lateral repair and private sewers is evaluated on a case-by-case basis and requires a variance approved by the Utility.

Variance applications must include the following information:

1. Lining material. Stryrene liners are prohibited.
2. Curing method.
3. Installation contractor including contact information.

If a variance is approved, Contractor shall perform pre-construction inspection to document the existing conditions. Contractor shall also perform a post-construction CCTV inspection to verify the repair was successful and acceptable. If the inspection is unsuccessful, the Contractor is required to complete repairs and request a new inspection. These inspection videos shall be made available to the Utility upon request.

Section 405 Erosion Control, Site Restoration, and Safety

405.01 Introduction

This Section provides the minimum erosion control requirements, site restoration requirements, and safety guidelines for the construction of all sanitary sewer facilities.

This Section is not intended to replace any applicable safety requirements such as, but not limited, to OSHA requirements. The Contractor and Applicant shall follow all applicable OSHA Standards and any other applicable safety regulations during all phases of the project.

405.02 General Requirements

The Contractor and Owner are responsible for ensuring safe working conditions and safety procedures are being followed at the work site.

The CWA Authority, Inc and/or Citizens Westfield, or any authorized representative of the CWA Authority, Inc and/or Citizens Westfield, is NOT responsible for policing the Contractor's safety program.

A Stop Work order may be issued per Section 102.11 of this Manual if work is, in the opinion of the Utility, or RPR, proceeding in an unsafe manner.

405.03 Erosion Control

In Indianapolis, erosion control requirements shall be per the latest edition of "Chapter 600 Erosion and Sediment Control" of the City of Indianapolis Stormwater Design and Construction Specifications Manual or the City of Westfield "Construction Standards and Specifications". All sites shall be in compliance with applicable regulations promulgated by the applicable local jurisdiction and IDEM.

405.04 Site Restoration

Site restoration for all disturbed areas within the project shall be as follows:

1. For off-site areas

    a. All areas shall be restored to the original or better condition.

    b. Paved areas within the public right-of-way shall be restored per the latest revision of the Department of Metropolitan Development's "Regulations of Cuts Within the Public Right-of-Way." and the City of Westfield Construction Standards and Specifications or other applicable requirements

	2. For on-site areas The area shall be restored per approved construction plans.
405.05 Final Cleanup	When construction is complete, the Contractor shall remove all surplus material, trash, and debris from the site. Contractor shall be responsible for repairs of all unsatisfactory work.
405.06 Traffic Control	The Contractor shall maintain vehicular and pedestrian traffic during all operations as required by all the permits issued by the Utility. It is the responsibility of the Contractor to apply for and obtain all necessary permits. Protection of vehicular and pedestrian traffic shall be the sole responsibility of the Contractor. The Contractor shall comply with the latest edition of the “Indiana Manual on Uniform Traffic Control Devices for Streets and Highways” during work operations and for the duration of the project.
405.07 Trench Safety Systems	The Contractor shall be responsible for the design, installation, and maintenance, of any required trench safety system in compliance with, all applicable OSHA and other Federal, State, and Local regulations and requirements.

Section 501 Requirements Common to Both Lift Stations and Low Pressure Systems

501.01 Introduction

This Section provides the planning, design, and submittal requirements common to both lift stations and low pressure sewer systems.

For requirements specific to lift stations refer to Section 502 and 503.

For requirements specific to low pressure sewer systems refer to Section 504.

501.02 General

When possible, gravity sewers shall be extended to the proposed development. Lift Stations will be allowed if ALL the following conditions are met:

1. The proposed lift station or low pressure system is justified per Section 501.03;
2. The force main is designed per Section 502.15; and
3. Existing Service Area boundaries are not crossed.

Sanitary Sewer Service Area boundaries shall not be crossed to avoid extending gravity sanitary sewers.

When an existing lift station requires a capacity upgrade for a proposed development, the entire lift station system will be evaluated to determine the necessary upgrades. The requirements shall be determined on a case-by-case basis and shall be at the discretion of the Utility. The intent is to upgrade the existing lift station to the Standards set forth in this Manual.

501.03 Justification

Lift stations and low pressure systems shall be justified and will only be approved if the installation of a gravity sanitary sewer alternative exceeds the 50-year life cycle cost for the proposed system AND the criteria in Section 501.02 are met.

An accurate cost estimate to construct a gravity sanitary sewer alternative and a 50-year life cycle cost estimate for the proposed lift station shall be submitted prior to Approval.

The Utility, at its sole discretion, may choose to estimate the 50-year life cycle cost for the proposed lift station.

Section 502 Lift Station Design

502.01 Introduction

This Section provides the planning, design, and submittal requirements for lift stations with pumping capacities of 1,000 gpm or less.

Requirements for lift stations with capacities greater than 1,000 gpm will be determined by the Utility on a case-by-case basis.

502.02 General

Due to the variability of site conditions, each site and proposed lift station will be evaluated on a case-by-case basis. If deemed necessary, the Utility may make additional requirements not covered in this Manual.

To avoid unnecessary delays in the Permitting process, a pre-submittal meeting with the Utility during the planning stages of the project is recommended.

502.03 Submittal Requirements for Approval and Construction Permit

When submitting for an Approval and a Construction Permit, the following are required:

1. Lift Station Service Area – Per Section 502.04.

2. Lift Station Justification – Per Section 501.03.

    a. 50-year life cycle analysis.
    b. Gravity sewer alternative cost estimate.

3. Lift Station Calculations

    a. Pumping Capacity – Per Section 502.07.
    b. Total Dynamic Head (TDH) Calculations – Per Section 502.09.
    c. Pump and System Head Curves – Per Section 502.10.

4. Standard Lift Station Details

    The most recent version of the Standard Lift Station Detail Sheets, as furnished by the Utility, shall be submitted for lift stations.

5. Pre-Construction Submittal Requirements - Per Section 503.04.

6. Any other information the Utility deems necessary to review and evaluate the proposed pumping system.

502.04 Lift Station Service Area

The Applicant shall prepare a Lift Station Service Area Study in accordance with all the requirements in Section 202.03.

In addition to the requirements of Section 202.03, if it determined an existing lift station can be abandoned and connected to the proposed sanitary sewer system, the area served by the existing lift station shall be included in the proposed Lift Station Service Area.

502.05 Lift Station Location

Lift station locations will be evaluated by the Utility on a case-by-case basis. At a minimum, the lift station shall be located to assure the following:

1. Supervisory Control and Data Acquisition (SCADA) Connectivity.

   The lift station shall be located within the proposed development to assure connectivity to the CWA Authority, Inc and/or Citizens Westfield SCADA wireless monitoring and control network.

   Connectivity shall be verified prior to Approval.

   To verify connectivity, the location of the lift station shall be staked by the Engineer. Connectivity will be verified by a radio path test done by the Utility, or a representative of the Utility, and paid for by the Applicant. If the location does not provide adequate connectivity, an alternate location shall be chosen.

   To assure future connectivity, the development shall be configured in such a way to provide for a thirty (30) feet wide by seven hundred (700) feet long “clear zone” between the antenna at the lift station and the designated receiving radio tower. The clear zone is not required to be extended onto adjacent properties. However, if site conditions allow, the Utility may require an alternate location for the proposed lift station to have the entire clear zone, or as much as practical, located within the project boundaries.

   If possible, the clear zone shall be located in obstruction-free areas that cannot be built upon such as, but not limited to, right-of-ways, easements, common areas, flood hazard areas, or detention areas.

   If any of the above conditions cannot be met, the Utility will evaluate alternatives, including building height restrictions, on a case-by-case basis.

   The clear zone shall be shown on the plans.

b. An alternative of communication of 4G cellular is acceptable to the Utility. The Applicant shall coordinate with the Utility to schedule a site investigation at the physical address of the proposed lift station to test the cellular signal strength. The

Applicant is responsible for the cost of 4G reception signal strength testing.

2. Adequate Access

   The lift station shall be located adjacent public roads to assure adequate access is available for operation and maintenance activities. Clearance requirements are as follows:

   a. Concrete Pad

      i. To adjacent property lines – twenty (20) feet minimum;

      ii. To public right-of-way – thirty (30) feet maximum;

      iii. To private paved streets or paved areas – twenty (20) feet minimum and thirty (30) feet maximum; and

      iv. To structures or buildings – thirty (30) feet minimum.

   b. Access Drive

      To adjacent property lines – ten (10) feet minimum.

   Lift stations shall not be located in areas the Utility determines to be inaccessible such as, but not limited to, rear yards.

   If access from a public road is not possible, a variance request must be submitted demonstrating why access to a public road is not possible. All private roads having the potential to be used for access shall be designed to local public street standards to support loads from maintenance vehicles and to provide an adequate turning radius on the roads to accommodate Utility's maintenance equipment. Submitting the variance request does not guarantee approval.

3. Flood Hazard Areas – See Section 202.08 for requirements within Flood Hazard Areas.

502.06 Lift Station Type

Only submersible duplex lift stations will be allowed.

The configuration shall be per the Utility's most recent version of the Standard Lift Station Detail Sheets.

502.07 Pumping Capacity

The pumping capacity shall be calculated as follows:

Q = Design Flow / 1440 *where:*

Q = Pumping rate, gpm

Design Flow = Flow as determined per Section 202.04, gpd

1440 = Conversion from gpd to gpm

Each pump in a duplex station shall have a pumping capacity of *Q*. The second pump shall act as a backup in the event one (1) pump is out-of-service.

Q shall be rounded up in increments of 10 gpm (i.e. 233 gpm shall be rounded up to 240 gpm).

The Utility may require the pumping capacity to be increased or decreased, if deemed necessary.

The minimum pumping capacity shall be 100 gpm.

502.08 Initial Pumping Capacity

Because proposed developments may only be a portion of the overall Lift Station Service Area, the Utility may allow or require the pumping capacity to be reduced for the proposed development if the following conditions are met:

1. The area of the proposed development is less than 50% of the Lift Station Service Area.

2. The required Pumping Capacity for the proposed development is less than 50% of the required Pumping Capacity for the Lift Station Service Area.

At a minimum, each pump shall be sized to accommodate the Design Flow of the proposed development plus 20%.

Meeting the above criteria does not guarantee a reduction will be allowed.

The specific equipment requirements and allowable reductions will be at the discretion of the Utility and will be evaluated on a case-by-case basis. Only the pumps, motors, and relevant control panel equipment will be considered for allowable reductions. The wet well, valve and meter vaults, piping, valves, and force main shall be sized for the overall Lift Station Service Area.

502.09 Total Dynamic Head Calculations

The Total Dynamic Head (TDH) shall be calculated for the pumping capacity of the lift station.

The TDH is the sum of the static head and friction losses for a given pumping rate in a defined pumping system. TDH shall be calculated as follows:

$$TDH = \text{Static Head} + h_f + h_m$$

where:

TDH = Total Dynamic Head, feet

Static Head = Elevation difference between the force main discharge elevation and the pump off elevation, feet

h_f = Piping friction losses, feet

h_m = Minor losses, feet

The above variables shall be calculated as follows:

1. Static Head, feet

   Static Head = Force Main Discharge Elevation – Pump Off Elevation

   When the high point in a force main is not at the discharge elevation, the elevation of the high point shall be evaluated to determine if the pump performance characteristics are adversely affected.

2. h_f = Piping friction losses, feet

   Piping friction losses shall be calculated as follows:

$$h_f = 10.44\ L\ \frac{Q^{1.85}}{C^{1.85}\ D^{4.8655}}$$

where:

D = pipe diameter, inches

Q = pumping rate, gpm

C = pipe roughness coefficient (100, 120, & 140)*

L = force main length, feet

* A roughness coefficient of C = 120 shall be used to determine the Operating Point. However, due to changing force main conditions over time, the TDH shall also be calculated using C = 100 at the Pump Off elevation and C = 140 at the Pump On elevation. See Section 502.10 for Pump Selection Criteria and further explanation.

3. h_m = Minor losses, feet

Minor losses are due to pipe fittings and shall be calculated as follows:

$$h_m = \frac{KV^2}{2g}$$

where:

K = proportionality constant**

V = velocity, ft/sec

g = gravitation constant = 32.2 ft/sec^2

** The proportionality constant, K, is dependent on the type of fitting. Unless justified, K, shall be as follows:

Fitting	K
Check Valve	2.5
Plug Valve	1.5
Tee	0.9
90° Elbow	0.3
45° Elbow	0.2

Alternate methods to determine minor losses, such as using Equivalent Lengths, may be allowed on a case-by-case basis with prior approval from the Utility.

502.10 Pump Selection

The Pumping Capacity and TDH, as calculated in Sections 502.07 and 502.09, shall be used as the Operating Point when selecting the pump make and model.

Per Section 502.09, a roughness coefficient of C = 120 was used to determine the Operating Point. However, each pump shall be within

the pumps operating range when C = 100 at the Pump Off elevation and C = 140 at the Pump On elevation. The pump, motor, and impeller shall be non-overloading throughout the entire operating range for all roughness coefficients.

The system head curves for each roughness coefficient shall be plotted on the pump performance curve to determine the operating characteristics.

Engineering judgment may be used when evaluating pump alternatives. If justified, the Utility may require a different operating point or an alternate pump to be used.

502.11 Variable Speed Pumping Systems

The need for variable speed pumping systems will be evaluated on a case-by-case basis and shall be at the discretion of the Utility.

Variable Speed Pumping systems may be required if ANY of the following conditions are met:

1. Horsepower – Greater than sixty (60) hp;
2. TDH – Greater than fifty (50) feet;
3. Pump Capacity – Greater than 500 gpm;
4. Hydraulic Transients (water hammer) – When the potential for damaging transients exist;
5. Buildout conditions – If the design flow as determined in Section 202.03 justifies; and
6. Others – If pump system conditions justify.

Lift stations with constant speed pumping systems shall be designated as “Level 3” Lift Stations and those with variable speed pumping systems shall be designated as a “Level 2” Lift Stations.

Constant speed control system requirements for Level 3 Lift Stations shall be per Section 503.08.

Variable speed control system requirements for Level 2 Lift Stations shall be per Section 503.09.

502.12 Wet Well Sizing

The wet well shall be sized for the entire Lift Station Service Area.

The minimum size of the wet well shall be as follows:

1. Diameter of Wet Well

The minimum wet well diameter shall be six (6) feet.

2. Depth of Wet Well, below the invert of the incoming sewer

The minimum required depth of the wet well below the invert of the incoming sewer shall be calculated as follows:

Depth = 3 feet + Operating Depth + Height of pump

where:

3 feet = Difference between the lowest incoming gravity sewer invert and the lead pump on elevation.

Height of Pump = Distance from the bottom of the wet well to the top of the pump, feet. Pump must be fully submerged during entire operating range.

Operating Depth = Depth between the lead pump on and pump off elevations, feet.

The operating depth is a function of the volume and diameter.

The volume shall be based on four (4) starts per hour and shall be calculated as follows:

$$V = \frac{tQ}{4}$$

where:

V = Volume, gallons

t = 15 minutes (15 minute station cycle time)

Q = Pumping rate per 502.07, gpm.

The minimum Operating Depth shall be 2.5 feet.

Only one (1) incoming sewer connection is allowed per Section 502.17.

When Variable Speed Pumps are required per Section 502.11, the Utility may consider or require a reduction of the volume.

Both pumps shall remain fully submerged at all times during the full pumping cycle.

3. Detention Time

   The maximum detention time (pump off time) shall be thirty (30) minutes based on the average daily flow.

There may be some situations when one or more of the above wet well sizing criteria cannot be met. The Utility will evaluate those instances on a case-by-case basis.

Note: If noticeable odors are being generated at any time before the Maintenance Bond expires, the Applicant shall determine the cause and construct an odor control facility at either the wet well or the discharge end of the force main. The method used for odor control will be approved by the Utility on a case-by-case basis.

502.13 Operating Setpoints

The elevation of the set points for the operation of the lift station shall be as follows:

1. Primary level sensor - Pressure Transducer (Per Section 503.08 or 503.09).
   a. Alarm Level = 0.5 feet below the lowest incoming invert;
   b. Lag Pump On = 1.0 feet below the lowest incoming invert;
   c. Lead Pump On = 3 feet below the lowest incoming invert;
   d. Pump Off = (Lead Pump On Elev. – Operating Depth per Section 502.12.)
2. Backup (Alarm) level sensors - Ball Floats (Per Section 503.08 or 503.09)
   a. Pump On = (Lowest incoming pipe invert + 1/2 diameter of pipe.)
   b. Pump Off = 0.5 feet below the lowest incoming pipe invert.

502.14 Valve and Meter Vaults

The minimum vault dimensions for Level 2 and Level 3 lift stations shall be per the most recent version of the Standard Lift Station Detail Sheets.

502.15 Force Main Design

The force main shall be designed as follows:

1. Lift stations shall not pump downhill.

   Prior to discharging into the receiving manhole, the force main shall not flow downhill. When possible, the receiving gravity

sewer shall be extended a sufficient distance to avoid downhill pumping.

The discharge elevation of the force main at the discharge location shall not be below the elevation in the valve vault and greater than two (2) feet above the invert of the receiving sewer.

2. The size, depth, slope, and location shall be as follows:

   a. Size

      The diameter shall be sized using the Pumping Capacity as determined in Section 502.07 with the following velocities:

      i. Minimum Velocity – 2.5 ft/sec

      ii. Maximum Velocity – 6.0 ft/sec

         Higher velocities will be considered and evaluated on a case-by-case basis.

         If the Pumping Capacity is reduced per Section 502.08, the minimum velocity may be reduced to 2.0 ft/sec when using the Initial Pumping Capacity.

      The minimum diameter force main shall be nominal 4 inches.

   b. Depth

      The minimum depth to the top of the pipe shall be 4.5 feet.

      The depth may be required to be increased if air release valves can be avoided or the minimum slope cannot be achieved.

   c. Slope

      i. The minimum slope for force mains shall be greater than 0%

      The Utility may limit the length installed with HDD or require open cut installation if the number of air release valves can be reduced.

   d. Location

      Existing and proposed force mains shall be located per Section 202.07.1 & 2.

3. Air Release / Vacuum Relief Valves

When possible, force mains shall be designed to avoid the need for air release valves.

When high points cannot be avoided, A.R.I. S-020, stainless steel air release valves shall be installed per the most recent version of the Standard Lift Station Standard Detail Sheets and at each high point where air could become trapped.

If conditions specifically require a vacuum release valve, and only if specifically approved by the Utility, an A.R.I. D-20 stainless steel combination air and vacuum release valve shall be used.

4. Force Main Anchorage

Force mains shall be anchored to resist thrusts at all bends, angles, tees, etc. in the force main pipe. The required anchorage shall be achieved by installing restrained pipe joints and concrete thrust blocks or anchor blocks as designed by the Engineer, and shown on the plans.

Restrained joints shall be per Section 304.

The Engineer shall determine the number of joints and/or length of pipe to be restrained on each side of all bends. The number of restrained joints or length of pipe shall be shown on the plans.

a. Connections to force mains are prohibited, except for connections to common force mains in Low Pressure Systems.

5. Force Main Discharge

Force main discharge design must include corrosion protection. Both will be evaluated by the Utility on a case-by-case basis. The engineer should provide a full detail of the proposed force main discharge into any new or existing manhole and the proposed corrosion protection approach.

502.16 Buoyancy The wet well shall be designed to prevent “floating” by assuring:

Opposing Forces > Buoyancy Forces where:

Opposing Forces = Weight resisting buoyancy forces (lbs).

	Buoyancy Forces = Uplifting forces due to groundwater (lbs). The groundwater elevation shall be assumed to be at the surface elevation immediately adjacent the base slab.
502.17 Connections to the Wet Well	For proposed lift stations, only one (1) incoming connection to the wet well will be allowed. The connection shall be of sufficient depth and size to provide service to the entire Lift Station Service Area.

Section 503 Lift Station Equipment and Operating Requirements

503.01 Introduction	This Section provides the equipment and operating requirements for lift stations.
503.02 General	Lift station equipment meeting or exceeding the requirements set herein will be approved. However, the Utility may modify any of the requirements in this Section, if justified. All components of the lift station exposed to weather shall be constructed of material that is resistant to corrosion and will not require surface protection throughout the expected life of the lift station. In general, these materials are stainless steel, aluminum, fiberglass reinforced polyester (FRP), and ultraviolet stabilized PVC.
503.03 Equipment Vendors	Equipment shall be an integral package supplied by the pump supplier with local representation so as to provide undivided responsibility.
503.04 Submittal Requirements: Pre-Construction	Prior to construction, the Contractor shall submit the following: 1. A cover letter from the Engineer and Contractor indicating all proposed equipment and components meet the requirements of this Manual and the approved Plans.
503.05 Power Requirements	Only electric-utility-delivered 3-phase, 60 Hz, 4-wire wye, or delta power will be allowed. The use of phase converters or variable frequency drives to derive 3-phase power from 1-phase power is prohibited.
503.06 Pump Equipment	Pumps shall be Hydromatic, Flygt, or Utility mandated alternate. Pump Equipment shall be as follows: 1. Pumps Pumps shall be of the submersible type for handling raw unscreened sewage. Pump volute, motor, and seal housing shall be high quality gray cast iron. Impeller shall be either cast iron or cast bronze of a non-clog design capable of handling minimum three (3) inch sphere solids, fibrous material, heavy sludge, and other matter found in normal sewage applications.

Impeller shall have pump out vanes on the back shroud of the impeller to keep pumped material away from the seal area and increase operating life. Impeller shall be either slip fit or taper fit with key to securely lock the impeller to the driving shaft. The pump volute shall be fit with a replaceable bronze wear ring to minimize wear on the impeller and help achieve longer balance operating life. All fasteners shall be of stainless steel.

2. Mating Surfaces

All mating surfaces where watertight sealing is required shall be machined and fitted with nitrile rubber O-rings. Sealing shall be accomplished when metal-to-metal contact is made, resulting in controlled compression of the rubber O-rings without requirement of a specific torque limit.

3. Seal System

The pump shall be provided with a mechanical rotating shaft seal system running in an oil reservoir having separate, constantly lubricated lapped seal faces. The lower seal unit between the pump and oil chamber shall consist of one (1) stationary seat and one (1) rotating ring held in place by its own spring. The lower seal shall be removable without disassembling the seal chamber. The upper seal between the motor and the seal chamber shall be of the same design with its own separate spring system. The seals shall require neither maintenance nor adjustment, but shall be easily inspected and replaceable. Shaft seals with conventional double seal utilizing a single spring between the two (2) seals and requiring a pressure differential to offset external pressure shall not be considered acceptable nor equal to the dual independent seal system specified. The shaft sealing system shall be capable of operating submerged to pressures equivalent to two hundred (200) feet. No seal damage shall result from operating the pump unit out of its liquid environment. The seal system shall not rely upon the pumped media for lubrication.

The seal chamber shall also be equipped with a seal failure sensor probe which will sense water intrusion through the lower seal. This sensor shall be connected to an alarm in the control panel to indicate lower seal failure.

4. Housing

The stator winding, rotor and bearings shall be mounted in sealed submersible type housing. Insulation utilized in the stator windings shall be Class H with maximum temperature

capability of 180º C. Motor housing shall be filled with a high dielectric oil to give superior heat transfer and allow the bearing to run in a clean, well lubricated environment; or the housing shall be air filled with grease lubricated bearings. The pump and motor are to be specifically designed so that they may be operated partially or completely submerged in the liquid being pumped. The pump shall not require cooling water jackets. Stator shall be securely held in place with a removable end ring and threaded fasteners so that it may be easily removed in the field without use of heat or press. Shaft shall be stainless steel and supported by ball bearings. Motor shall be provided with heat sensing units attached to the motor windings which shall be connected to the control panel to shut down pump if overheating occurs.

5. Cables

   Pump motor cable and heat sensor/seal failure sensor cable shall be suitable for submersible pump applications and this shall be indicated by a code or legend permanently embossed on the cable. Cable sizing shall conform to NEC specifications for pump motors and shall be of adequate size to allow motor voltage conversion without replacing the cable. Cable of the proper length shall be provided to eliminate need for splices or junction boxes between pump and “control center.” The cable shall enter the motor through a cord cap assembly which is double sealed allowing disassembly and disconnect of the wires and the motor and still not damage the sealed characteristics of the motor housing. Each individual conductor shall be color coded in accordance with generally accepted industry standards. The color coding shall designate the application of the conductor.

6. Mounting Base

   The pump mounting base shall include adjustable guide rail supports and a discharge connection with a one hundred twenty-five (125) pound standard flange. The base and the discharge piping shall be permanently mounted in place. The base plates shall be anchored in place utilizing epoxy type anchors with stainless steel studs and nuts as manufactured by HILTI Fasteners, Inc. or equal.

7. Guide Rails

   A rail system shall be provided for easy removal of the pump and motor assembly for inspection and service. The system shall not require a man to enter the wet well to remove the

pump and motor assembly. Two (2) rails of two (2) inch stainless steel pipe for Flygt pumps or one rail of FRP I-Beam for Hydromatic pumps shall be provided for each pump unless the size of the pump dictates otherwise. The guide rails shall be positioned and supported by the pump mounting base. The guide rails shall be aligned vertically and supported at the top by attachment to the access hatch frame. One (1) intermediate guide rail support shall be required for each nine (9) feet of guide rail length for FRP and fifteen (15) feet for stainless steel pipe. All mounting equipment shall be stainless steel.

8. Rail Guide and Lifting Chain

   The pumps shall be equipped with sliding brackets or rail guides. To insure easy removal of the pumps, the rail guides attached to each pump shall not encircle the rails. A stainless steel lifting chain of adequate length for the basin depth shall be provided for each pump. Each pump shall be equipped with a permanent, stationary lifting handle with a minimum clearance of twelve (12) inches between the top of the pump and bottom of the handle.

   The rails and the rail guide shall function to allow the complete weight of the pumping unit to be lifted on dead center without binding and stressing the pump housing. The rail system shall function to automatically align the pumping unit to the discharge connection by a simple downward movement of the pump. No twisting or angle approach will be considered acceptable. The actual sealing of the discharge interface may be of the hydraulically sealing diaphragm type assembly with removable Buna-N diaphragm as supplied by Hydromatic Pump or may be of the metal-to-metal contact as provided by Flygt Pump.

9. Warranty

   Pump warranty shall be provided by the pump manufacturer and shall warrant the units being supplied to the Owner and CWA Authority, Inc and/or Citizens Westfield against defects in workmanship and materials for a period of five (5) years under normal use, operation and service. The warranty shall be in printed form and apply to all similar units. A copy of the warranty statement shall be submitted with the approval drawings.

503.07 Lift Station Components

The lift station shall be configured and shall include all components shown on the most recent version of the Lift Station Details Sheets (Figure 500.01) and the following:

1. Wet Well, Valve and Meter Pits, Flat Top, and Base Slab

   a. Material

      The wet well, valve and meter vaults, flat tops and base slabs shall be constructed of precast concrete meeting the requirements of ASTM C 478. Cast-in-place monolithic structures may be substituted with the prior written approval from the Utility.

   b. Joints

      All joints between precast sections shall be per Section 305.02.

   c. Waterproofing

      The outside wall below grade shall be coated with bituminous waterproofing material.

2. Concrete Pad

   The wet well and valve and meter vaults shall be enclosed at grade level with a minimum eight (8) inch thick reinforced concrete pad rectangular in shape.

3. Access Drive

   The Lift Station shall be provided with a minimum eight (8) inch thick by fifteen (15) feet wide reinforced concrete access drive conforming to the latest DOT Standards for Design of Driveways.

4. Access Hatches and Frames

   a. An aluminum two (2) door access hatch frame and door assembly shall be installed in the concrete top for the wet well. This door assembly shall provide access for removal of the pumps and shall support the guide rails It shall be provided with a lifting handle, safety latch to hold the door in the open position, and a hasp suitable for a padlock. The doors shall have a non-skid finish and be designed with a minimum 300 psi, live loading. Hatches shall have an interior safety hatch. The safety hatch shall be designed to cover the complete opening maintaining a fall through protection per all applicable OSHA Standards.

      Westfield covers shall have diamond pattern.

Hatches shall be manufactured by Halliday Products, Inc. or Bilco.

b. Valve and Meter Vaults

An aluminum single door access hatch frame and door assembly with similar requirements to the one described in 503.07 4 a for the wet well shall be installed in the concrete top for the valve and meter vaults. Minimum opening shall be thirty-six (36) inches by thirty-six (36) inches.

Hatches shall be manufactured by Halliday Products, Inc. or Bilco.

5. Check and Shutoff Valves

A swing check valve with a weight operated external swing arm and an eccentric plug valve without operators shall be installed in the valve vault on each pump's discharge piping. A minimum clearance of twelve (12) inches shall be allowed on the top, bottom and all sides of the valve from the bottom of the valves to the invert of the vault.

A drain pipe and check valve shall be installed to drain the valve vault back to the wet well but not allow the wet well liquid to enter the valve vault. Check valve shall be installed on the downstream end of the drain pipe in the wet well. In addition, a tee or cross with bleedable blind flange shall be provided in the valve vault.

6. Magnetic Flow Meter and Shutoff Valves

When variable speed pumping systems are required, a magnetic flow meter and an eccentric plug valve shall be installed on the discharge piping per Section 503.09. A minimum clearance of twelve (12) inches shall be allowed between the top, bottom and all sides of the valves to allow maintenance. Provide stainless steel flanged spool piece for magnetic flow meter.

Straight sections of pipe upstream and downstream of the magnetic flow meter shall be per manufacture's recommendation.

7. Internal Drop Pipes

   Drop pipes shall be installed in all incoming pipes four (4) feet or greater above the pump-on elevation or as directed by the Department of Underground Engineering & Construction.

8. Pipe Coatings

   The outside surfaces of exposed pipe and fittings within the wet well and valve vault shall be first coated with a zinc primer followed by an epoxy based coating applied per coating manufacturer's recommendation.

9. Fall Protection

   In addition to the required safety hatches specified in Section 503.07.4, a Miller Bolt-on Anchor Plate model DH-AP-12 shall be installed with four (4) anchor bolts meeting the manufacturer strength requirements (Ex: Hilti HIT-HY 200 adhesive anchors with 5/8" HAS/HIT-V threaded rod and 4" embedment) per manufacturers recommendation. The Bolt-on Anchor plate will be used in conjunction with compatible Utility supplied Portable Fall Arrest Anchor Post Model DH-AP-1 or equal.

503.08 Control System Requirements – Level 3 Lift Stations

The Control System Requirements for Level 3 lift stations with constant speed pumps shall be per the current Underground Engineering & Construction specifications, Lift Station Details Sheets Figure 500.01, or as follows:

1. Overall Lift Station Control System Enclosure Requirements

   a. General Requirements:

      i. Control and electrical components shall be individually equipment rack mounted as shown on schematics and as follows:

         - Pump Control Panel. NEMA 4X stainless steel with dead front and internal swing out panel door. Include pump controls, operator interface, telemetry equipment, and uninterruptible power supply.
         - Power distribution panel. NEMA 4X stainless steel. Include phase monitor, surge protection devices, branch circuit breakers, and motor starters.
         - Utility approved meter socket.
         - Service entrance rated NEMA 4X double throw fused main disconnect switch for utility power and portable emergency generator connection. Include 3 phase/4 wire, NEMA 4X generator docking station that utilizes J-Series male "Cam-Lok" panelmounts with flip covers for portable generator connection. Docking station shall have padlockable swinging

front door. Access to cable connectors shall be via bottom hinged door. Internal busbar shall be silver plated copper. Assembly shall use UL listed components and be rated 65AIC. Generator docking station shall be Trystar GDS or equal.

- NEMA 3R control power transformer, suitable for outdoor use.

i. Enclosures shall be mounted on lift station concrete pad. Concrete pad shall be a minimum three inches higher than the adjacent ground. Concrete pad shall be a minimum of one foot larger in dimension than enclosure plus radius of door swings. Orientate panel placement so that panel doors do not open over or near wet well opening.

ii. Provide enclosures with following additional accessories:

- Drip shield.
- Padlock hasp.
- Stainless steel 3-point latch to allow panel opening without tools.
- In addition to above, Pump Control Panel shall be provided with:
  - Fluorescent door switch activated light.
  - Ground Fault Interrupting (GFI) 120 VAC receptacle.
  - Thermostatically controlled heaters sized to maintain panel internal temperature at 50°F with outdoor temperature of -20°F.

2. Electrical Requirements

a. The lift station shall have electric-utility-delivered 3-phase, 60Hz, 4-wire wye, or delta power. All stations powered by 3-phase primary voltage shall have a minimum 2.0 KVA single-phase, 480/240 to 120/240 VAC transformer. **Use of phase converters to derive 3-phase power from 1-phase power source is prohibited**.

b. Include generator docking station for connection of OWNER provided portable emergency generator to the lift station using OWNER provided cables with “Cam-Lok” connectors. Generator docking station shall be sized to run up to a single 100 horsepower motor load (200amp rated).

c. Motor starters shall be **NEMA**-rated magnetic type with a 120 volt control coil, and three thermal overload relays with a minimum size of NEMA-1.

3. Wiring, Termination, and Labeling Requirements

   a. Wiring:

      i. In addition to NEC and NEMA requirements, wiring shall conform to following:

         - Power: 12 AWG stranded minimum, type MTW, 600 V.

         - Control: 16 AWG stranded minimum, type MTW, 300 V.
         - Analog Signal: Twisted pair, 18 AWG, Beldon 8760 or equal.

      ii. Wire color code:

         - AC neutral conductor: White.
         - AC hot conductor: Black.
         - Grounding conductor: Green.
         - AC control conductor, powered from within panel: Color coded and numbered.
         - AC control conductor, powered from remote source: Yellow.
         - DC (+) power conductor: Blue.
         - DC (-) power conductor: Blue.
         - DC control conductor: Blue.
         - Twisted pair cable (-) signal conductor: White.
         - Twisted pair cable (+) signal conductor: Black.
         - Intrinsically safe conductors – light blue.

      iii. Design control panels to keep 3-phase power, 120-vac power and discrete signals, and analog and other low voltage signals separated.

         - Do not run 3-phase power, 120-vac power and discrete signals, and analog or other low voltage signals in the same conduit or wire-duct.
         - Where 3-phase power, 120-vac power and discrete signals, and analog or other low voltage signals must cross, they shall do so at right angles.

      iv. Internal Panel Wiring Within Wire Duct:

         - Wherever feasible plastic wire duct with cover shall be used for routing of wire within control panel.
         - Size wire duct to be no more than 50% full.
         - Maintain 2” clearance between wire duct and terminals.

v. Internal Panel Wiring outside of wire duct.

- Wiring outside of ducts shall be restrained by use of plastic wire-ties.
- Restrain wiring a minimum of every six inches.
- Provide abrasion protection for wires passing through holes or across abrasive metal edges.
- Adhesive type wire fasteners shall not be used. Hard screw type shall be employed.

b. Terminations:

i. Wiring within control panel shall be continuous and terminated only at terminal blocks or equipment terminals. Splices or butt connectors shall not be used within panel.
ii. Other than terminal to terminal bussing as described below, no more than one wire shall be terminated at any one terminal.
iii. Make external connections by way of numbered terminal blocks on numbered terminal strips.
iv. When signals are powered from remote location, switched terminal blocks shall be used where conductors enter or leave panel.
v. When signals are powered from within panel, fused terminal blocks shall be used where conductors enter or leave panel.
vi. Provide integral bussing system on terminal block array where more than two terminations require common source or drain connection. Jumpered terminations shall not be acceptable.
vii. Include provisions for grounding of shields on shielded twisted pair cables entering or leaving panel. Cable shields shall be grounded at terminal block end only.
viii. Provide separate locations on terminal strips for each of the following types of signals.

- 480 or 240-vac power circuits.
- 120-vac power circuits.
- 120-vac discrete signals.
- 24 or 48 Vdc discrete signals.
- Analog signals.
- Serial or parallel digital communication signals.

ix. Provide separate terminal strip for intrinsically safe circuits. Intrinsically safe wiring shall be separated by non-conducting or grounded barrier within panel, and not combined with any other wiring within conduit or wire duct.

c. Power Distribution:

i. Panels having 3-phase power supply:

- Service entrance rated NEMA 3R double throw fused main disconnect switch to isolate utility power to panel and allow connection of portable emergency generator. Mount generator docking station adjacent to main disconnect switch. Main disconnect and generator docking station shall be a minimum of 200amp rated.
- Provide circuit breakers for all motor starters provided.
- Provide phase monitor relay (PMR).
- If panel includes separate 120 vac control power supply, provide auxiliary contact to isolate control power when main circuit breaker is opened.
- 480(240, 208) / 120 control power transformer requirements:
  - Both primary leads shall be fused.
  - First secondary lead shall be fused.
  - Second secondary lead shall be grounded.

ii. Panels having 120 vac power supply:

- Provide circuit breaker on power supply entering panel.

iii. Provide separately fused power supply to each major panel component.

iv. Panels using modular or solid state I/O devices.

- Provide separately fused power circuit for panel powered I/O signals entering panel from field devices. Provide separate circuit for each module.
- Include digital transient surge suppressor/varistor installed in parallel with output contact at terminal strip for each output signal driving an inductive load including:
  - Relays.
  - Solenoids.
  - Motor starters.
  - Motors.

4. UPS Requirements

a. Provide true on-line non switching UPS.

b. UPS shall supply power to Programmable Logic Controller (PLC), Operator Interface Unit (OIU), radio, Ethernet switch, field instruments, and other low voltage control devices.

c. UPS shall have enough capacity to power these devices for a period of 2 hours after the utility power has failed. Provide with extended battery module to meet this requirement.

d. UPS shall provide dry contacts to PLC for utility fail and low battery power alarms.

e. Minimum UPS size shall be 700 VA.

f. Double power conversion on-line operation including rectifier and inverter, constantly conditioned AC output.

g. Provide make before break manually operated bypass switch or other means to bypass UPS to allow operation of system controls in event of UPS failure.

h. Alpha Technologies FXM 750 or 1100 bases on the site.

5. Ethernet Switch, Radio, Antenna, and Antenna Mounting Requirements

a. Provide Ethernet switch, radio, antenna, antenna cable, and antenna mounting pole.

b. Ethernet switch and radio shall be mounted within Pump Control Panel.

c. Contractor shall determine signal strength available at lift station locations. Available signal strength shall be tested at elevations of 20’ and 15’ above ground level and signal strength test results shall be supplied to CWA Authority, Inc and/or Citizens Westfield.

d. Contractor shall determine the most suitable location for the antenna based on the results of signal strength testing. Antenna pole shall be affixed to lift station concrete pad.

e. Contractor shall mount the antenna in the selected location, and provide antenna cable in conduit.

f. Where lift station structure does not exist or is unsuitable for antenna mounting, antenna mounting pole shall be up to 20‘ tall, 4” in diameter, aluminum, and set within concrete or firmly affixed to pump station.

g. Where lift station structure is suitable for antenna mounting, antenna mounting pole shall be 2” in diameter, aluminum, and firmly affixed to pump station.

h. Provide grounding of antenna pole in accordance with NEC requirements.

i. Programming of radio shall be by the Utility.

6. 4G Cellular Requirements

   a. Contractor shall provide the following equipment:
      i. Cisco 809 Integrated Services Router IR809G-LTE-NA-K9 (4G cellular unit)
      ii. Cisco Integrated 4G Low-profile outdoor saucer antenna (ANT-4G-SR-OUT-TNC), antenna cable, and antenna mounting bracket
      iii. Ethernet cable
   b. The Utility provides the sim card of 4G router for the Contractor's 4G connectivity. Detailed information can be coordinated with the Utility.

   7. Field Instrument Requirements

      a. Provide submersible level transmitter to sense level in wet well and control pump on/off operation.

         i. Hydrostatic pressure measurement.
         ii. Loop powered.
         iii. 4 – 20 mAdc output signal.
         iv. 316 stainless steel submersible housing and diaphragm, Viton grommet and O-ring. Provide with stainless steel braided support cable to prevent transmitter from being supported by signal cable.
         v. Accuracy +/- 0.25% of span including linearity, hysteresis, and repeatability.
         vi. Provide with lightning and surge protector to be mounted in Pump Control Panel.
         vii. CSA approved intrinsically safe when used with appropriate barrier.
         viii. Ametek model 575.

      b. Provide wet well float switches to sense high and low level in wet well and control standby pump on/off operation. Standby pump operation shall be independent of PLC.

         i. SPDT contacts, rated 1 amp at 150 VAC/VDC inductive, mechanical life 10 million operations.
         ii. 316 stainless steel mounting hardware. Mounting shall be via weight and chain/cable not requiring entry to wet well for cleaning or replacement.
         iii. Connery Model 2900 pear shaped neoprene covered mercury switch ball float of standard size, supported by stainless steel cable.

      c. For lift stations containing a dry well, or areas prone to flooding due to pump seal or piping failure, provide dry well float switch to sense dry well flooding.

         i. SPDT contacts, rated 1 amp at 150 VAC/VDC inductive, mechanical life 10 million operations.
         ii. Connery Model 2900 pear shaped neoprene covered mercury switch ball float of standard size.

d. Provide intrusion detection switches.

   i. When control and electrical components are mounted outdoors, provide intrusion detection switches for electrical and control equipment enclosure.
   ii. When control and electrical components are mounted indoors provide intrusion detection switches for all entrances into pump station.
   iii. Reed switch enclosed in ABS plastic case, normally closed contact.
   iv. Sentrol 1045 series or approved equal.

8. Pump Control Panel Requirements

   a. A Pump Control Panel shall be provided to house the PLC, OIU, Ethernet switch, radio, lightning and surge protection devices, and pump monitoring equipment.

   b. When Pump Control Panel is mounted outdoors, provide with a low temperature switch, set at 40 °F, mounted within the enclosure to alarm failure of heater.

   c. The automatic pump operation, automatic pump lead-lag alteration, and all control logic commands shall be performed by the PLC. The PLC shall be Allen Bradley Micrologix 1400, with no substitutions allowed, and shall meet the following requirements:

      i. Minimum 24 Discrete Inputs
      ii. Minimum 12 Discrete Outputs
      iii. Minimum 4 Analog Inputs
      iv. Minimum 2 Analog Output
      v. 6 K-word memory minimum, 2 K data storage, 4 K program.
      vi. Real time clock
      vii. Floating point math
      viii. PID control
      ix. Ethernet interface

   d. The OIU shall be Allen Bradley Panelview Plus 400 meeting the following requirements:

      i. 3.7” monochrome display
      ii. 320 X 240, 32 level greyscale resolution
      iii. Keypad
      iv. NEMA 12/4X
      v. DC Powered

   e. The Ethernet switch shall be Phoenix Contact meeting the following requirements:

      i. 4 RJ45 ports
      ii. 10/100 Mbits/s
      iii. 0 to 55 °C operating temperature
      iv. DC Powered

f. Provide the following front of panel mounted devices to be labeled as indicated. For outdoor locations, devices shall be mounted to swing out panel door.

   i. “Hand-Off-Automatic” selector switch for each pump, with the hand mode wired for manual operation independent of the PLC.
   ii. Operator interface.

g. PLC I/O signals:

   i. Discrete Inputs:

      - Pump 1 running
      - Pump 2 running
      - Pump 1 “Auto” (from panel mounted HOA switch)
      - Pump 2 “Auto” (from panel mounted HOA switch)
      - Pump 1 seal fail (submersible pump applications only, alarm display only – no pump interlock)
      - Pump 2 seal fail (submersible pump applications only, alarm display only – no pump interlock)
      - Pump 1 motor high motor temperature (submersible pump applications only), motor breaker trip, and motor starter overload combined into common alarm and used to interlock pump operation.
      - Pump 2 motor high motor temperature (submersible pump applications only), motor breaker trip, and motor starter overload combined into common alarm and used to interlock pump operation.
      - Alarm test (from pushbutton)
      - Alarm silence (from pushbutton)
      - High wet well level
      - Low wet well level
      - Dry well flood
      - Lift station intrusion
      - Low temperature
      - Low battery power
      - Utility power fail
      - Phase fail

   ii. Discrete Outputs:

      - Pump 1 required
      - Pump 2 required
      - Pump 1 seal test (submersible pump applications only)
      - Pump 2 seal test (submersible pump applications only)
      - Common alarm to horn and light

   iii. Analog Inputs:

- Wet well level

h. OIU shall be configured to allow:

   i. Display pump run, fail, automatic mode, overload, seal fail, motor over-temperature, accumulated pump run time, and accumulated pump number of starts for each pump. Display all discrete and analog signals input to PLC, and calculated or derived parameters including communication fail, crew on site, intrusion, and float control mode.
   ii. Wet well level, high and low level alarms.
   iii. “Lead Pump 1 / Lead Pump 2 / Lead Pump Alternate” selection.
   iv. Calculated lift station flow rate and accumulated flow total.
   v. Display communications fail (to SCADA central).
   vi. Display status of all input signals to PLC.
   vii. Capability to place pumps “Out of Service”. Display “Out of Service” status at OIU.
   viii. Configure to allow “Crew on Site” input. Allow entry of operator’s 4 digit identification number after “Crew on Site” has been entered. This function is to work in conjunction with the Intrusion switch. Once an intrusion has been detected the crew will have a set amount of time to enter a valid code before the intrusion alarm is activated.
   ix. Operator data entry for adjustable set points, including pump on/off levels, time delays, etc. Allow for operator entry of 4 digit password prior to accepting parameter changes.

i. System programming guidelines:

   i. Provide program documentation for all OIU and PLC program files developed for the system. PLC program documentation shall include comments for all registers used and sufficient rung comments to describe operation of logic used within program. Provide four copies of program documentation on CD.
   ii. Automatic pump control shall start and stop pumps in a lead and lag fashion based on wet well level input.
   iii. Provide lead pump alternation on each successive lead pump shutdown when automatic alternation is selected.
   iv. Provide pump fault logic to sense discrepancy between pump-required output being turned on and no pump run signal being received. Configure system to generate fault on any condition including motor overload, motor over temperature, seal failure or power disconnect.
   v. Provide time delay on pump required outputs, initially set at 10 seconds and 20 seconds, to prevent simultaneous pump restart on restoration of control power.
   vi. “Out of Service” entry shall remove pump from operating sequence, and prevent alarms from being generated for pump.

vii. All alarms shall automatically reset when the alarm condition has cleared. An adjustable 0-15 minute time delay relay shall be activated and timed-out prior to transmitting the high or low wet well level condition.
viii. Pump accumulated run time shall be calculated for each pump.
ix. Pump accumulated number of starts shall be calculated for each pump.
x. Provide routine to calculate lift station draw down time. Draw down time data shall be time stamped, and indicate which pump(s) running during draw down event.
xi. Program to ensure that regardless of configuration of backup hardware, (re: back up ball floats when primary level control device is pressure transducer) primary level control device automatically takes over when level of wet well returns to desired operating level.
xii. Provide routine to calculate lift station flow rate and accumulated lift station accumulated flow total. Calculation shall be based on following:

- Wet well dimensions, include adjustable offset for equipment, piping, or other items affecting wet well volume and account for cross-sectional changes between minimum and maximum levels. Calculation shall be made such that changes to pump on and off level set-points shall not require change to flow calculation routine.
- Wet well level rate of rise shall be used to calculate inflow rate when pump are not operating.
- During pump run events, inflow rate shall be calculated as the average inflow rate occurring immediately before and after pump run event.

xiii. PLC shall be configured to periodically transfer information to SCADA Central HMI. Transfer of information shall occur periodically based on information request from SCADA Central HMI, and be initiated by lift station PLC on occurrence of alarm condition. Periodic data transfer of information to SCADA Central HMI shall include:

- Lift station accumulated flow total.
- 10 minute averaged flow rate data. Time stamped average flow rate data values shall be logged internally to PLC memory. Logged data shall be retained until data successfully transferred to HMI, at which point it shall be deleted.
- Pump draw down data. Time stamped data values shall be logged internally to PLC memory. Logged data shall be retained until data successfully transferred to HMI, at which point it shall be deleted.
- Pump elapsed run time data
- Accumulated number of starts for each pump

- Coordinate programming requirements with the Utility
- Data transfer shall be configured to allow SCADA Central HMI to emulate all data input and display functions present at OIU, including display all discrete and analog signals input to PLC, and calculated or derived parameters including communication fail, crew on site, intrusion, and float control mode.
- Data transfer to and from SCADA Central HMI shall take place using contiguous PLC register locations to maximize efficiency of data transfer. Register usage and addressing shall be coordinated with CWA Authority, Inc and/or Citizens Westfield.
- Include provision for periodic receipt of current time and date SCADA Central HMI.

j. Required modifications to the Lift Station Central SCADA system monitoring software at the Waste Water Treatment Plant will be performed by the Utility.

503.09 Control System Requirements – Level 2 Lift Stations

The Control System Requirements for Level 2 Lift Stations with variable speed pumps shall be per the current Underground Engineering & Construction specifications, Lift Station Details Sheets Figure 500.01, or as follows:

1. Overall Lift Station Control System Enclosure Requirements

   Note to specifier: Select item a or b below as appropriate

   a. Outdoor Location Requirements:

      i. Control and electrical components shall be individually equipment rack mounted as shown on schematics and as follows:

      - Pump Control Panel. NEMA 4X stainless steel with dead front and internal swing out panel door. Include pump controls, operator interface, flow meter transmitter, telemetry equipment, and uninterruptible power supply.
      - Power distribution panel. NEMA 4X stainless steel. Include phase monitor, surge protection devices, and branch circuit breakers.
      - Utility approved meter socket.
      - Service entrance rated NEMA 3R double throw fused main disconnect switch for utility power and portable emergency generator connection. Include 3 phase/4 wire ,Nema 3R generator docking station that utilizes J-Series male “Cam-Lok” panelmounts with flip covers for portable generator connection. Docking station shall have padlockable swinging front door.

Access to cable connectors shall be via bottom hinged door. Internal busbar shall be silver plated copper. Assembly shall use UL listed components and be rated 65AIC. Generator docking station shall be Trystar GDS or equal.

- NEMA 3R control power transformer, suitable for outdoor use.

i. Provide NEMA 4X rated variable speed drives suitable for outdoor use. Drive enclosure shall be end product of drive manufacturer. Drive may be mounted to equipment rack or freestanding as shown on schematics.

ii. Enclosures shall be mounted on lift station concrete pad. Concrete pad shall be a minimum three inches higher than the adjacent ground. Concrete pad shall be a minimum of one foot larger in dimension than enclosure plus radius of door swings. Orientate panel placement so that panel doors do not open over or near wet well opening.

iii. Provide enclosures with following additional accessories:

- Drip shield.
- Padlock hasp.
- Stainless steel 3-point latch to allow panel opening without tools.
- In addition to above, Pump Control Panel shall be provided with:
  - Fluorescent door switch activated light.
  - GFI 120 VAC receptacle.
  - Thermostatically controlled heaters sized to maintain panel internal temperature at 50°F with outdoor temperature of -20°F.

b. Indoor Location Requirements:

i. Control and electrical components shall be individually wall mounted in NEMA 12 rated enclosures as follows:

- Pump Control Panel. Include GFI 120 VAC receptacle within panel.
- Service rated fused disconnect switch for utility power connection
- Power distribution panel, including surge protection devices, branch circuit breakers, and motor starters.
- Uninterruptible power supply.
- Flow meter transmitter.
- Control power transformer.
- Variable speed drives.
- Double throw transfer switch for use with portable emergency generator.

i. Size enclosures to adequately dissipate heat generated by equipment mounted in or on panel.

ii. Include exterior mounted weather proof generator connection.

2. Electrical Requirements

a. The lift station shall have electric-utility-delivered 3-phase, 60Hz, 4-wire wye, or delta power. All stations powered by 3-phase primary voltage shall have a minimum 2.0 KVA single-phase, 480/240 to 120/240 VAC transformer. **Use of phase converters to derive 3-phase power from 1-phase power source is prohibited**.

b. Include generator docking station for connection of OWNER provided portable emergency generator to the lift station using OWNER provided cables with “Cam-Lok” connectors. Generator docking station shall be sized to run up to a single 100 horsepower motor load (200amp rated).

3. Wiring, Termination, and Labeling Requirements

a. Wiring:

i. In addition to NEC and NEMA requirements, wiring shall conform to following:

- Power: 12 AWG stranded minimum, type MTW, 600 V.
- Control: 16 AWG stranded minimum, type MTW, 300 V.
- Analog Signal: Twisted pair, 18 AWG, Beldon 8760 or equal.

ii. Wire color code:

- AC neutral conductor: White.
- AC hot conductor: Black.
- Grounding conductor: Green.
- AC control conductor, powered from within panel: Color coded and numbered.
- AC control conductor, powered from remote source: Yellow.
- DC (+) power conductor: Blue.
- DC (-) power conductor: Blue.
- DC control conductor: Blue.
- Twisted pair cable (-) signal conductor: White.
- Twisted pair cable (+) signal conductor: Black.
- Intrinsically safe conductors – light blue.

iii. Design control panels to keep 3-phase power, 120-vac power and discrete signals, and analog and other low voltage signals separated.

- Do not run 3-phase vac power, 120-vac power and discrete signals, and analog or other low voltage signals in the same conduit or wire-duct.
- Where 3-phase vac power, 120-vac power and discrete signals, and analog or other low voltage signals must cross, they shall do so at right angles.

iv. Internal Panel Wiring Within Wire Duct:

- Wherever feasible plastic wire duct with cover shall be used for routing of wire within control panel.
- Size wire duct to be no more than 50% full.
- Maintain 2” clearance between wire duct and terminals.

v. Internal Panel Wiring outside of wire duct.

- Wiring outside of ducts shall be restrained by use of plastic wire-ties.
- Restrain wiring a minimum of every six inches.
- Provide abrasion protection for wires passing through holes or across abrasive metal edges.
- Adhesive type wire fasteners shall not be used. Hard screw type shall be employed.

b. Terminations:

i. Wiring within control panel shall be continuous and terminated only at terminal blocks or equipment terminals. Splices or butt connectors shall not be used within panel.
ii. Other than terminal to terminal bussing as described below, no more than one wire shall be terminated at any one terminal.
iii. Make external connections by way of numbered terminal blocks on numbered terminal strips.
iv. When signals are powered from remote location, switched terminal blocks shall be used where conductors enter or leave panel.
v. When signals are powered from within panel, fused terminal blocks shall be used where conductors enter or leave panel.
vi. Provide integral bussing system on terminal block array where more than two terminations require common source or drain connection. Jumpered terminations shall not be acceptable.
vii. Include provisions for grounding of shields on shielded twisted pair cables entering or leaving panel. Cable shields shall be grounded at terminal block end only.

viii. Provide separate locations on terminal strips for each of the following types of signals.

- 480 or 240-vac power circuits.
- 120-vac power circuits.
- 120-vac discrete signals.
- 24 or 48 Vdc discrete signals.
- Analog signals.
- Serial or parallel digital communication signals.

ix. Provide separate terminal strip for intrinsically safe circuits. Intrinsically safe wiring shall be separated by non-conducting or grounded barrier within panel, and not combined with any other wiring within conduit or wire duct.

c. Power Distribution:

i. Panels having 3-phase power supply:

- Service entrance rated NEMA 3R double throw fused main disconnect switch to isolate utility power to panel and allow connection of portable emergency generator. Mount generator docking station adjacent to main disconnect switch. Main disconnect and generator docking station shall be a minimum of 200amp rated.
- Provide circuit breakers for all variable frequency drives provided.
- Provide PMR.
- If panel includes separate 120 vac control power supply, provide auxiliary contact to isolate control power when main circuit breaker is opened.
- 480(240, 208) / 120 control power transformer requirements:
  - Both primary leads shall be fused.
  - First secondary lead shall be fused.
  - Second secondary lead shall be grounded.

ii. Panels having 120 vac power supply:

- Provide circuit breaker on power supply entering panel.

iii. Provide separately fused power supply to each major panel component.

iv. Panels using modular or solid state I/O devices.

- Provide separately fused power circuit for panel powered I/O signals entering panel from field devices. Provide separate circuit for each module.

- Include digital transient surge suppressor/varistor installed in parallel with output contact at terminal strip for each output signal driving an inductive load including:
  - Relays.
  - Solenoids.
  - Motor starters.
  - Motors.

4. Variable Frequency Drive (VFD) Requirements

   a. Drive enclosure shall be end product of drive manufacturer.

   b. Provide pulse width modulated VFDs.

   c. Provide with bypass contactor to allow across the line operation.

   d. Suitable for outdoor mounting, with maximum ambient temperature of 105°F.

   e. Mount in pad-lockable NEMA 4X stainless steel rated dead-front enclosure. Drive enclosure shall be end product of VFD manufacturer.

   f. Include thermostatically controlled heaters sized to maintain drive panel internal temperature at 50°F with outdoor temperature of -20°F.

   g. Use of air conditioning or heat exchangers to allow operation of VFD in elevated ambient temperatures is prohibited. Include externally mounted heat sinks (one per VFD) sized to maintain drive panel internal temperature at 100°F with outdoor temperature of 105°F. If required to meet specified ambient temperature requirements, derate drive capacity to meet temperature requirements. Provide with a high temperature switch, set at 110°F, mounted within the enclosure to alarm high drive temperature.

   h. Capable of withstanding line voltage transients up to 3000 V in accordance with ANSI 37.90.1.

   i. IGBT switching.

   j. Match output power to motor, 0.5% speed regulation, 110% overload capacity for 60 seconds, 100% rated torque from 60 Hz to required turndown.

   k. 3% input line reactors.

   l. Instantaneous over-current trip shutdown, under-voltage protection with automatic restart.

m. Include keypad/display mounted within enclosure, accessible when enclosure is opened.

n. Manufacturers

   i. Allen Bradley.
   ii. Eaton/Cutler Hammer.
   iii. Saftronics.
   iv. Toshiba.
   v. No substitutions allowed.

5. UPS Requirements

   a. Provide true on-line non switching UPS.

   b. UPS shall supply power to PLC, OIU, radio, Ethernet switch, field instruments, and other low voltage control devices.

   c. UPS shall have enough capacity to power these devices for a period of 2 hours after the utility power has failed. Provide with extended battery module to meet this requirement.

   d. UPS shall provide dry contacts to PLC for utility fail and low battery power alarms.

   e. Minimum UPS size shall be 700 VA.

   f. Double power conversion on-line operation including rectifier and inverter, constantly conditioned AC output.

   g. Provide make before break manually operated bypass switch or other means to bypass UPS to allow operation of system controls in event of UPS failure.

   h. Alpha Technologies FXM 750 or 1100 based on the site.

6. Ethernet Switch, Radio, Antenna, and Antenna Mounting Requirements

   a. Provide Ethernet switch, radio, antenna, antenna cable, and antenna mounting pole.

   b. Radio, antenna cable, antenna, and lightning and surge protection devices shall be purchased from the CWA Authority, Inc and/or Citizens Westfield's approved radio equipment supplier to ensure compatibility with the CWA Authority, Inc and/or Citizens Westfield's radio based SCADA communication network used for lift station monitoring.

   c. Ethernet switch and radio shall be mounted within Pump Control Panel.

d. Contractor shall determine signal strength available at lift station locations. Available signal strength shall be tested at elevations of 20’ and 15’ above ground level and signal strength test results shall be supplied to the City.

e. Contractor shall determine the most suitable location for the antenna based on the results of signal strength testing. Antenna pole shall be affixed to lift station concrete pad.

f. Based on the results of signal strength testing, the Contractor shall purchase either the 900 MHz or 5.7 GHz radio, as selected by the Utility approved radio equipment supplier.

g. Contractor shall mount the antenna in the selected location, and provide antenna cable in conduit.

h. Where lift station structure does not exist or is unsuitable for antenna mounting, antenna mounting pole shall be up to 20‘ tall, 4” in diameter, aluminum, and set within concrete or firmly affixed to pump station.

i. Where lift station structure is suitable for antenna mounting, antenna mounting pole shall be 2” in diameter, aluminum, and firmly affixed to pump station.

j. Provide grounding of antenna pole in accordance with NEC requirements.

k. Programming of radio shall by the Utility.

7. 4G Cellular Requirements

a. Contractor shall provide the following equipment:
   i. Cisco 809 Integrated Services Router IR809G-LTE-NA-K9 (4G cellular modem)
   ii. Cisco Integrated 4G Low-profile Outdoor Saucer Antenna (ANT-4G-SR-OUT-TNC), antenna cable, and antenna mounting bracket
   iii. Ethernet cable
b. The Utility provides the sim card of 4G router for the Contractor’s 4G connectivity. Detailed information can be coordinated with the Utility.

8. Field Instrument Requirements

a. Provide submersible level transmitter to sense level in wet well and control pump on/off operation.

   i. Hydrostatic pressure measurement.
   ii. Loop powered.
   iii. 4 – 20 mAdc output signal.
   iv. 316 stainless steel submersible housing and diaphragm, Viton grommet and O-ring. Provide with stainless steel

braided support cable to prevent transmitter from being supported by signal cable.

v. Accuracy +/- 0.25% of span including linearity, hysteresis, and repeatability.
vi. Provide with lightning and surge protector to be mounted in Pump Control Panel.
vii. Suitable for use in Class 1, Division 1, Group D hazardous classified location when used with appropriate barrier.
viii. Ametek model 575.

b. In high grease or other applications, ultrasonic level sensor may be used with approval from OWNER.

i. Ultrasonic level measurement.
ii. 120 VAC powered.
iii. 4 – 20 mAdc output signal.
iv. Accuracy +/- 0.1 % of span including linearity, hysteresis, and repeatability.
v. Provide with lightning and surge protector to be mounted in Pump Control Panel.
vi. Suitable for use in Class 1, Division 1, and Group D hazardous classified location.
vii. Manufacturers:

- Milltronics MINI-Ranger
- Endress and Hauser Prosonic M
- No substitutions allowed.

c. Provide wet well float switches to sense high and low level in wet well and control standby pump on/off operation. Standby pump operation shall be independent of PLC.

i. SPDT contacts, rated 1 amp at 150 VAC/VDC inductive, mechanical life 10 million operations.
ii. Connery Model 2900 pear shaped neoprene covered mercury switch ball float of standard size, supported by stainless steel cable.

d. For lift stations containing a dry well, or areas prone to flooding due to pump seal or piping failure, provide dry well float switch to sense dry well flooding.

i. SPDT contacts, rated 1 amp at 150 VAC/VDC inductive, mechanical life 10 million operations.
ii. Connery Model 2900 pear shaped neoprene covered mercury switch ball float of standard size.

e. Provide intrusion detection switches.

i. When control and electrical components are mounted outdoors, provide intrusion detection switches for electrical and control equipment enclosure.

ii. When control and electrical components are mounted indoors provide intrusion detection switches for all entrances into pump station.
iii. Reed switch enclosed in ABS plastic case, normally closed contact.
iv. Sentrol 1045 series or approved equal.

f. Provide magnetic flow meter.

i. Size meter to maintain average velocity of 3 ft/sec.
ii. System accuracy of +/- 25% of flow rate with 10:1 turndown.
iii. Meter body:

- Utilize low frequency dc pulse.
- Accidental submergence rating of 30 ft. water for 48 hours.
- Polyurethane or hard rubber liner, 316 stainless steel electrodes.
- Provide with 316 stainless steel grounding rings, use of grounding probes not acceptable.
- Suitable for Class 1, Division II, Hazardous classified location.
- Include isolating plug valves before and after meter body to facilitate meter removal. Include spool piece of same dimensions as meter body.
- Maintain minimum of 5 upstream and 3 downstream unobstructed pipe diameters before and after meter body. Provide separate meter vault if required to meet dimensional requirement. Meter vault shall be provided with sump and flood alarm float switch.

iv. Transmitter:

- 120 VAC, 60 Hz power.
- For outdoor locations, mount on Pump Control Panel internal swing out panel as shown.
- Provide pulsed DC voltage to meter body magnet coils.
- Integral keypad/display.
- Automatic empty pipe detection.

v. Manufacturers:

- Rosemount
- Krohne
- ABB
- Foxboro
- Sparling
- No substitutions allowed.

9. Pump Control Panel Requirements

   a. A Pump Control Panel shall be provided to house the Programmable Logic Controller (PLC), Operator Interface Unit (OIU), Ethernet switch, radio, lightning and surge protection devices, and pump monitoring equipment.

   b. When Pump Control Panel is mounted outdoors, provide with a low temperature switch, set at 40 °F, mounted within the enclosure to alarm failure of heater.

   c. The automatic pump operation, automatic pump lead-lag alteration, and all control logic commands shall be performed by the PLC. The PLC shall be Allen Bradley Micrologix 1400, with no substitutions allowed, and shall meet the following requirements:

      i. Minimum 32 Discrete Inputs
      ii. Minimum 12 Discrete Outputs
      iii. Minimum 8 Analog Inputs
      iv. Minimum 4 Analog Output
      v. 6 K-word memory minimum, 2 K data storage, 4 K program.
      vi. Real time clock
      vii. Floating point math
      viii. PID control
      ix. Ethernet interface
      x. DC Powered

   d. The OIU shall be Allen Bradley Panelview Plus 400 meeting the following requirements:

      i. 3.7” monochrome display
      ii. 320 X 240, 32 level greyscale resolution
      iii. Keypad
      iv. NEMA 12/4X
      v. Ethernet Interface
      vi. DC Powered

   e. The Ethernet switch shall be Phoenix Contact meeting the following requirements:

      i. 4 RJ45 ports
      ii. 10/100 Mbits/s
      iii. 0 to 55 °C operating temperature
      iv. DC Powered

   f. Provide the following front of panel mounted devices to be labeled as indicated. For outdoor locations, devices shall be mounted to swing out panel door.

      i. “Hand-Off-Automatic” selector switch for each pump, with the hand mode wired for manual operation independent of the PLC.

ii. “Constant Speed (CS)/Variable Speed (VS)” selector switch for each pump. Selector switch active in the “Hand” mode of operation.
iii. “Speed Control” potentiometer for each pump. Potentiometer shall be wired for manual mode operation independent of the PLC when “Hand” mode, “Variable Speed” operation has been selected via front of panel mounted hand switches.
iv. Operator interface.

g. PLC I/O signals:

i. Discrete Inputs:

- Pump 1 running
- Pump 2 running
- Pump 1 “Auto” (from panel mounted hand switch)
- Pump 2 “Auto” (from panel mounted hand switch)
- Pump 1 seal fail (submersible pump applications only, alarm display only – no pump interlock)
- Pump 2 seal fail (submersible pump applications only, alarm display only – no pump interlock)
- Pump 1 motor high motor temperature (submersible pump applications only), motor breaker trip, and motor starter overload combined into common alarm and used to interlock pump operation.
- Pump 2 motor high motor temperature (submersible pump applications only), motor breaker trip, and motor starter overload combined into common alarm and used to interlock pump operation.
- VFD 1 fault
- VFD 2 fault
- VFD 1 high temperature
- VFD 2 high temperature
- VFD 1 low temperature
- VFD 2 low temperature
- High wet well level
- Low wet well level
- Dry well flood
- Meter vault flood
- Lift station intrusion
- Low temperature
- Low battery power
- Utility power fail
- Phase fail

ii. Discrete Outputs:

- Pump 1 required – variable speed

- Pump 2 required – variable speed
- Pump 1 required – constant speed
- Pump 2 required – constant speed

- Pump 1 seal test (submersible pump applications only)
- Pump 2 seal test (submersible pump applications only)
- Common alarm to horn and light

i. Analog Inputs:

- Pump 1 speed
- Pump 2 speed
- Pump 1 current
- Pump 2 current
- Wet well level
- Flow

ii. Analog Outputs:

- Pump 1 speed control
- Pump 2 speed control

h. OIU shall be configured to allow:

i. Display pump run, pump fail, VFD fail, pump speed, automatic mode, overload, seal fail, motor over-temperature, accumulated pump run time, and accumulated pump number of starts for each pump. Display all discrete and analog signals input to PLC, and calculated or derived parameters including communication fail, crew on site, intrusion, and float control mode.
ii. Wet well level, high and low level alarms.
iii. “Lead Pump 1 / Lead Pump 2 / Lead Pump Alternate” selection.
iv. “Pump Manual/Automatic” mode selection for each pump.
v. “Pump Start”, “Pump Stop”, and “Manual Speed Control” entry for each pump, active when in the manual mode of control.
vi. Capability to place pumps “Out of Service”. Display “Out of Service” status at OIU.
vii. Lift station flow rate and integrated flow total.
viii. Display communication fails (to SCADA central).
ix. Display status of all input signals to PLC.
x. Configure to allow “Crew on Site” input. Allow entry of operator’s 4 digit identification number after “Crew on Site” has been entered. This function is to work in conjunction with the Intrusion switch. Once an intrusion has been detected the crew will have a set amount of time to enter a valid code before the intrusion alarm is activated.
xi. Operator data entry for adjustable set points, including pump on/off levels, time delays, etc. Allow for operator entry of 4 digit password prior to accepting parameter changes.

i. System programming guidelines:

i. Provide program documentation for all OIU and PLC program files developed for the system. PLC program documentation shall include comments for all registers used and sufficient rung comments to describe operation of logic used within program. Provide four copies of program documentation on CD.
ii. Automatic pump control shall start and stop pumps in a lead and lag fashion and control pump speed based on wet well level input.
iii. Configure controls to maintain operator entered wet well level set point using PID control. Pump start request shall be initiated when:

- Wet well level rises operator adjustable amount above wet well level set point
- Lead pump, if operating, speed control output is at 100%
- The wet well is not falling

Pump immediate start command shall be issued if wet well level rises to adjustable high level “Immediate Start” level.

iv. Pump stop request shall be initiated when:

- Wet well level falls operator adjustable amount below wet well level set point.
- Speed control output is at minimum speed setting for currently operating number of pumps. Provide separate adjustable minimum speed setting for one pump running and two pumps operating scenarios.
- The wet well is not rising.

Pump immediate stop command shall be issued if wet well level falls to adjustable low level “Immediate Stop” level.

v. Provide weekly lead pump alternation based on operator entered time of day and day of week.
vi. Provide pump fault logic to sense discrepancy between pump-required output being turned on and no pump run signal being received. Configure system to generate fault on any condition including motor overload, motor over temperature, seal failure or power disconnect.
vii. Provide time delay on pump required outputs, initially set at 10 seconds and 20 seconds, to prevent simultaneous pump restart on restoration of control power.
viii. “Out of Service” entry shall remove pump from operating sequence, and prevent alarms from being generated for pump.

ix. All alarms shall automatically reset when the alarm condition has cleared. An adjustable 0-15 minute time delay relay shall be activated and timed-out prior to transmitting the high or low wet well level condition.
x. Pump accumulated run time shall be calculated for each pump.
xi. Pump accumulated number of starts shall be calculated for each pump.
xii. Program to ensure that regardless of configuration of backup hardware, (re: back up ball floats when primary level control device is pressure transducer) primary level control device automatically takes over when level of wet well returns to desired operating level.
xiii. Provide integration routine to calculate accumulated lift station accumulated flow total based on flow rate input signal.
xiv. Periodic data transfer of information to SCADA Central HMI shall include:

- Lift station accumulated flow total.
- 10 minute averaged flow rate data. Time stamped average flow rate data values shall be logged internally to PLC memory. Logged data shall be retained until data successfully transferred to HMI, at which point it shall be deleted.
- Pump elapsed run time data
- Accumulated number of starts for each pump
- Coordinate programming requirements with the Utility
- Data transfer shall be configured to allow SCADA Central HMI to emulate all data input and display functions present at OIU, including display all discrete and analog signals input to PLC, and calculated or derived parameters including communication fail, crew on site, intrusion, and float control mode.
- Data transfer to and from SCADA Central HMI shall take place using contiguous PLC register locations to maximize efficiency of data transfer. Register usage and addressing shall be coordinated with the Utility.
- Include provision for periodic receipt of current time and date SCADA Central HMI.

j. Required modifications to the Lift Station Central SCADA system monitoring software at the Waste Water Treatment Plant will be performed by the Utility.

503.10 Control System Requirements – Westfield

1. Controls for each pump station shall include two panels: Starter Panel and RTU (remote terminal unit) panel, and radio antenna installation. The RTU panel shall be integrated into, and be compatible with, the Utility utilities

SCADA (supervisory control and data acquisition) system.

a. Provide and install RTU panel as part of this contract.
b. Provide and install RTU radio modem and antenna as part of this contract.
c. Provide and install Starter Panel as part of this contract.
d. Programming of RTU and integration to the SCADA system will be provided by the Owner.

2. Remote Terminal Unit (RTU): Provide the Utility utilities SCADA system standard lift station NEMA 4X RTU panel. Design RTU as follows:

3.

a. RTU panel construction:

i. Enclosure shall be Hoffman A-30H2410SS6LP NEMA 4X stainless steel, complete with internal mounting panel.
ii. RTU: Bristol Babcok Controlwave Micro 8 Slot CPU w/ 1 Ethernet and 2 serial communication ports.
iii. 16 Pin Digital Output Card
iv. 16 Pin Digital Output Card
v. 8 Pin Analog Input Card
vi. 4 Pin Analog Output Card
vii. IDEC 50 Watts, 24 Volt DC power supply
viii. Powerware 3110 UPS
ix. Series-wired, multi-stage hybrid, 3-stage, active-tracking, power-line protector. Innovative Technology, Inc., Model HS-120-10A.
x. Duplex utility receptacles
xi. Esteem Ethernet Radio 195Es or MDS TransNET 900 spread-spectrum radio modem as directed by the Utility
xii. Polyphaser bulkhead mount coaxial cable surge protector
xiii. Phoenix Contact fused power, two-level, and grounded three-level terminal blocks as required.
xiv. Phoenix Contact double-pole double-throw, terminal block style relays as required.

b. Wire the RTU to accommodate the following input and output signals:

i. Discrete Inputs:
(1) Pump 1 On/Off Status
(2) Pump 2 On/Off Status

(3) Pump 3 On/Off Status
(4) Wet well High Water Level
(5) Station Power Failure
(6) Starter Panel Door Position
(7) Pump Failure
(8) Electrical Panel Door
(9) Instrumentation Panel Door
(10) Hatch Door
(11) Security Keypad

ii. Discrete Outputs:
(1) Pump 1 Control
(2) Pump 1 Force Off
(3) Pump 2 Control
(4) Pump 2 Force Off
(5) Pump 3 Control
(6) Pump 3 Force Off
(7) Security Alarm Alert
(8) Security Disarmed
(9) Security Armed

iii. Analog Inputs:
(1) Wet well Level

c. Control interface between the RTU and the starter panel will be as follows:

i. Under normal automatic condition, control the pump operation from the RTU.
ii. RTU shall be able to turn (force) off any pumps in any mode.

4. Radio Antenna: Provide radio modem antenna, antenna tower, and antenna cable as required.

a. Antenna shall be directional type, pointed towards the Westfield North Elevated Water Tank.
b. Construct antenna tower from a 3 inch aluminum pipe, 24 feet high.
i. The bottom 4 feet shall be coated with bituminous coating and planted underground in concrete base. See drawings.
ii. Antenna height shall be 20 feet above ground.
iii. Cap top of pipe with matching cap.
iv. Install antenna cable inside pipe.
v. Bond tower to electrical ground using #4 bare copper conductors.

5. Starter Panel: Provide NEMA 4X stainless steel starter panel, sized to accommodate starters and controls for specified pumps. Pump sizes shall be as indicated in the pump data sheet. Design starter panel as follows:

a. Panel Construction:

i. Provide padlocking hasp and staple, and matching stainless steel drip shield.
ii. Install two 1/2 inch drains similar to Crouse-Hinds No. ECD17 at enclosure bottom, located on opposite sides.
iii. Install two 1/2 inch breathers similar to Crouse-Hinds No. ECD16 at enclosure top, located on opposite sides.
iv. Provide internal mounting panel and a swing-out panel.
v. Furnish properly sized industrial grade corrosion inhibitors inside the enclosure.
vi. Provide thermostatically controlled, properly sized condensate heater. Mount heater on the lower portion of the enclosure internal mounting panel.
vii. Furnish door actuated panel fluorescent light similar to Hoffman Catalog No. A-LFDA2.
viii. Install all wiring within the enclosure in plastic wiring ducts. Do not mix low level signal wiring (24 Volts AD or DC) with high voltage wiring (110 Volts AC or greater) in the same duct.
ix. Terminate all wiring at terminal blocks. Splices will not be permitted.
x. Seal all conduit entry originating from wet well to prevent moisture and gas vapors from entering the enclosure.
xi. Provide twisted shielded pair cables for all low-level signal wiring (mA DC).

b. Terminate incoming power wiring at distribution lugs.

c. Provide service entrance-rated transient-voltage surge suppressor (TVSS) to protect all equipment mounted within the enclosure from switching surges and lightning induced surges. The TVSS shall be Innovative Technology, Inc., Model PTX080-NN400.

d. Distribute power through thermal magnetic circuit breakers and motor circuit protectors. Install units so that they are accessible from the front of the swing-out panel.

i. Provide a motor circuit protector (MCP) for each pump starter. Each MCP shall have adjustable instantaneous trip, and shall be sized for each load.

ii. Provide circuit breaker for step-down transformer.
iii. Furnish circuit breakers with minimum interrupting rating of 25,000 Amperes (AIC).
iv. Provide phase band and voltage monitoring.

e. If incoming power is greater than 120/240 Volts AC, provide transformer to step down incoming power to 120 Volts AC. Transformer shall be high efficiency type, with 105° Celsius temperature class, extra regulation and low losses.

i. Minimum size of transformer shall be 1.0 KVA.
ii. Protect transformer primary feeder with circuit breaker described above.
iii. Size transformer to provide power to all 120 Volt AC loads listed below.

f. Distribute 120-Volt AC-power through single pole, 15-Ampere circuit breakers, each with 10,000 AIC.

i. Provide dedicated circuit breaker for each individual pump control circuit.
ii. Provide a circuit breaker for alarm beacon, utility receptacle, panel light and thermostatically controlled enclosure heater.
iii. Provide dedicated circuit breaker for pump failure monitoring circuit.
iv. Provide dedicated circuit breaker for 24 Volts AC control transformer.
v. Provide dedicated circuit breaker for RTU Panel.

g. Furnish GFI protected duplex utility receptacle. Mount unit so that it is accessible from the front of the swing-out panel.

h. Provide full-voltage, non-reversing, NEMA-rated starter for each pump. (IEC-rated starters are not acceptable.) Size starters and thermal overloads according to motor nameplate data.

i. Furnish industrial grade, heavy-duty, 30mm, oil-tight and watertight types, control devices.

i. Device contact blocks shall be rated 10-Ampere continuous.

ii. Pilot lights shall be protected LED types rated for 100,000 hours of operation. Colors shall be as specified below.
iii. H-O-A selector switches shall be provided with four (4) contact blocks: one (1) shall only close in “H” position, and three (3) shall only close in “A” position.

j. Provide each pump with the following, swing-out panel mounted, controls:

i. An H-O-A selector switch.
ii. An “ON” pilot light (red).
iii. An “OFF” pilot light (green).
iv. A non-resettable elapsed time meter.
v. A “HI-TEMP” pilot light (amber).
vi. A “SEAL FAIL” pilot light (amber).
vii. A “RESET” pushbutton.

k. Provide the following auxiliary contacts from each starter:

i. Two normally open starter auxiliary contacts.
ii. Two normally closed starter auxiliary contacts
iii. One normally open auxiliary overload alarm contacts.

6. Design each pump control circuit as follows:

a. RTU output (“force off”) shall be able to stop pumps at any mode.
b. When H-O-A selector switch is in “H”, the pump motor shall run.
c. When in “O”, the pump motor shall be off.
d. When in “A”, in normal condition, the pump shall be controlled by RTU output (“pump control”). Pump will shut down on high motor winding temperature condition.
e. When in “A”, in high wet well condition, the pump shall operate when high level float makes, and stops when low level float breaks.
f. Energize amber “HI-TEMP” light when thermal overload relay trips, or when winding temperature detector trips motor.
g. Energize amber “SEAL FAIL” light when seal failure contacts trip.
h. Provide single contact for RTU monitoring of all pump failure conditions.

7. Provide motor high winding temperature and motor seal failure detector for each pump. Detector circuit shall shut down motor when detector trips. Motor shall remain

shut down until associated “RESET” push button is pressed.

8. Provide dry contacts as necessary for RTU monitoring purposes.

   a. Terminate RTU input and output wiring at terminal blocks, grouped and dedicated for RTU interface wiring.

   b. Provide extra relays as necessary to achieve intended operation and monitoring.

9. Furnish high and low float switches, which shall be constructed as follows:

   a. The float switches shall be watertight, mechanical snap-action type, encased in a chemical-resistant polypropylene casing. Float shall be Model ENM-10 Liquid Level Sensor as manufactured by Flygt, or equal.

   b. Suspend each float switch on its own cable, which shall be long enough to reach wet well floor. Each switch shall be weighted with enamel coated cast iron weight to permit float to pivot for proper operation.

   c. Install floats using stainless steel hardware.

   d. Float switch elevations shall be adjustable over the entire wet well depth.

10. Furnish a submersible hydrostatic pressure type level sensor.

   a. The hydrostatic pressure type level sensor shall be submersible type, suspended on its cable. The sensing diaphragm shall be provided with an end-cap and 304 stainless steel eyebolt.

      i. Select sensor range based on wet well depth.
      ii. Sensor output shall be 4 to 20 mA DC proportional to water level, 2-wire type, with loop power supply of 9 to 30 Volts DC.
      iii. All exposed parts shall be constructed of 316 Stainless Steel

   b. Fabricate a Teflon coated marine anchor. Weight of anchor shall not exceed 5 pounds.

   c. Attach concrete cylinder to the level sensor eyebolt using stainless steel aircraft cable and

mechanical crimp. Adjust cable length so that sensing diaphragm is at 12 inches above the cylinder bottom surface.

d. Lower sensor assembly until concrete cylinder rests on wet well floor. Pull sensor cable taut until sensing diaphragm is at 12 inches above wet well floor. Do not hang concrete cylinder from sensor cable.

e. Provide at least 10 foot excess cable. Coil excess cable on stainless steel cable rack at top of wet well.

11. Provide an alarm beacon light, which shall be energized on high water alarm condition. Alarm beacon light shall be as follows:

a. Watertight, suitable for outdoor installation and provided with a red lens.

b. Light source shall be high intensity strobe type, with light intensity of 1,000,000 (1-million) peak candlepower.

c. Mount unit on top of starter panel enclosure using watertight conduit hub, similar to Myers ST-1, T&B 401, or OZ-Gedney CHM-50T.

12. Acceptable Manufacturers:

a. Motor starters and control components: Allen Bradley.

b. Circuit breakers and motor circuit protectors: Square D.

c. Level sensor:

i. Viatran, model 517, or
ii. Endress+Hauser.

d. Beacon light: Federal Signal “Fireball 2”.

503.11 Westfield Lift Station Specifications

PIPING MATERIALS

1. Ductile iron pipe shall meet the requirements of ANSI Specification A21.51 (AWWA C151). Design and manufacture pipe for a working pressure of 150 psi plus 100 psi surge and a safety factor of 2 and a depth of cover indicated on the drawings and specified in this Section. Minimum thickness class shall be 350.

2. Pipe joints shall be push-on type. Joints shall meet the requirements of ANSI/AWWA A21.11/C111. Restrained joints shall be Lok-Ring, Lok-Fast, Lok-Tyte, or approved equal.

3. Fittings shall be cast iron or ductile iron. Fittings shall meet the requirements of ANSI/AWWA C110. Design and manufacture fittings for a pressure rating of 250 psi. Fitting joints shall be mechanical joints or restrained push-on joints. Joints shall meet the requirements of ANSI/AWWA A21.11/C111. Thrust blocking or restrained joints as required or if necessary.

4. Gate valves 4 inch and larger shall be full ductile iron body, epoxy fusion bounded inside and out, non-rising stem gate valves. Valves shall meet the requirements of ANSI/AWWA C500 or C509 and shall have mechanical joint ends. Exposed bolts and nuts shall be stainless steel. Joint accessories shall meet the requirements of ANSI/AWWA C11/A21.11. Valve opening direction shall be counter-clockwise.

    a. Gate valves 4 inch and larger installed in structures shall be full ductile iron body, outside screw, and yoke gate valves. Valves shall meet the requirements of ANSI/AWWA C500 or C509, except those parts of ANSI/AWWA C500 or C509 only applicable to non-rising stem gate valves and wrench nuts. Outside screw and yoke gate valves shall have flange joint ends and malleable iron handwheels. Flange joints and accessories shall meet the requirements of ANSI/AWWA C110. Nuts and bolts shall be stainless steel. Gaskets shall be full face and shall be red rubber or approved equal.

    b. Gate valves shall be as manufactured by Waterous, U.S. Valve, or approved equal.

5. Plug valves shall be manually operated, with worm-gear operator handwheel. Stainless steel extension operating stems shall be provided for those valves utilizing floor stand operators.

    a. Plug valves shall be as manufactured by DeZurik, or approved equal.

    b. All plug valves shall be eccentric plug valves unless otherwise specified.

    c. Valves shall be of the non-lubricated eccentric type with resilient faced plugs and shall be furnished with end connections as shown on the

plans. Flanged valves shall be faced and drilled to the ANSI 125/150 lb. standard. Mechanical joint ends shall be to the AWWA C111-64, grooved ends per AWWA C606-87. Screwed ends shall be to the NPT standard.

d. Valve bodies shall be of ASTM A126 Class B cast iron. Bodies in 4" and larger valves shall be furnished with a 1/8" welded overlay seat of not less than 90% pure nickel. Seat area shall be raised, with raised surface completely covered with weld to insure that the plug face contacts only nickel. Screwed-in seats shall not be acceptable.

e. Plugs shall be of ASTM A126 Class B cast iron. The plug shall have a cylindrical seating surface eccentrically offset from the center of the plug shaft. The interference between the plug face and body seat, with the plug in the closed position, shall be externally adjustable in the field with the valve in the line under pressure. Plug shall be resilient faced with neoprene or hycar, suitable for use with sewage.

f. Valves shall have sleeve type metal bearings and shall be of sintered, oil impregnated permanently lubricated type 316 ASTM A743 Grade CF-8M in ½" sizes. In valves larger than 36", the upper and lower plug journals shall be fitted with ASTM A240 type 316 stainless sleeves with bearings of ASTM B30, Alloy C95400 aluminum bronze. Non-metallic bearings shall not be acceptable.

g. Valve shaft seals shall be of the multiple V-ring type and shall be externally adjustable and repackable without removing the bonnet or actuator from the valve under pressure. Valves utilizing O-ring seals or non-adjustable packing shall not be acceptable.

h. Valve pressure ratings shall be 175 psi through 12" and 150 psi for 14" through 72". Each valve shall be given a hydrostatic and seat test with test results being certified when required by the specifications.

i. Manual valves shall have lever or gear actuators and tee wrenches, extension stems, floor stands, etc., as indicated on the plans. All valves 6" and larger shall be equipped with gear actuators. All gearing shall be enclosed in a semi-steel housing and be suitable for running in a lubricant with seals provided on all shafts to prevent entry of dirt and water into the actuator. The actuator shaft and the

quadrant shall be supported on permanently lubricated bronze bearings. Actuators shall clearly indicate valve position and an adjustable stop shall be provided to set closing torque and to provide seat adjustment to compensate for change in pressure differential or flow direction change. All exposed nuts, bolts and washers shall be zinc plated.

j. Valves and gear actuators for buried or submerged service shall have seals or all shafts and gaskets on the valve and actuator covers to prevent the entry of water. Actuator mounting brackets for buried or submerged service shall be totally enclosed and shall have gasket seals. All exposed nuts, bolts, springs and washers shall be stainless steel.

k. Actuators shall be equipped with an operating nut to allow manual valve operation in case of supply failure.

l. All valves and actuators shall be as manufactured by DEZURIK, Pratt, Val-matic or approved equal.

m. All buried service plug valves shall have mechanical joint ends, have all exterior surfaces shop painted with two coats of Fed. Spec. TT-C-494A Asphalt Varnish with 2 inch square nut operator in a vertical position for use in a valve box. Provide nut operator stem extension for all plug valves buried deeper than 5 feet, sufficient to raise operator nut to within 3 feet of finished grade.

6. Single disc, swing check valves, 4 inch and larger, shall be used in sewage pump stations and shall be iron body, bronze-mounted, swing check, bolted cover, flanged ends, 125 psig working pressure, AWWA C508, suitable for use in a horizontal position. Flanges shall conform in dimensions and drilling to ANSI B16.1.

a. Swing check valves shall have outside weight and lever.

CONCRETE WET WELL AND VALVE VAULT

1. The Contractor shall furnish and install a water-tight, monolithic concrete or precast manhole type wet well as indicated on the drawings which are to be lined with SpectraShield and the first manhole that the force main from the lift station empties into is also to be lined. An on-site backup generator with an auto transfer switch

shall be furnished and installed by the Contractor. Pump and related equipment shall be installed and/or mounted as shown.

2. A water-tight, concrete valve vault shall be furnished and installed to house the valves and appurtenances. Drain and backflow preventer shall be installed from the valve vault to the wet well.

3. Precast manhole sections shall conform to requirements of ASTM C478 and be water tight.

4. Contractor may offer wet well sections conforming to ASTM C76, Class IV, Wall B pipe sections if shown on the drawings.

ALUMINUM HATCH

1. Frame shall be 1/4 inch extruded aluminum with built-in neoprene cushion and with strap anchors bolted to exterior. Cover leaf shall be 1/4 inch aluminum reinforced with aluminum stiffeners as required. Stainless steel hinges shall be bolted to underside and pivot on all stainless bolts and hardware shall be used. The cover shall open to 90 degrees and lock automatically in that position. A vinyl grip handle shall be provided to release and close the cover with one hand. Covers shall be built to withstand a live load of 150 pounds per square foot, and equipped with a snap lock and removable handle. When closed, covers shall not protrude above the operating surface in which they are installed. Factory finish shall be aluminum lacquer. Surface contacting concrete shall have bituminous coating.

2. Covers shall be diamond pattern plate.

3. Hatches shall have an interior safety hatch.

   a. The safety hatch shall be designed to cover the complete opening maintaining a fall through protection all applicable OSHA Standards..

   b. Doors cannot be closed unless the fall through protection has been put back in place (protecting the next worker).

   c. Allows visual inspections, limited maintenance and float adjustment while safety grate is left in place.

   d. Open grates create a physical barrier around the pit, protecting passing pedestrians.

e. Safety orange color promotes a visual awareness of the hazard.

f. Quality materials provide superior corrosion resistance.

g. Pump platform. Pumps can be pulled from the pit then suspended, the grating closed, and the pump set back on the grating. This allows for pump wash downs directly back into the pit to prevent EPA clean-up due to site contamination.

4. Aluminum covers shall be Bilco Type K or KD, Flygt, or approved equal.

5. When flush mounted covers are furnished, provide two wrenches for opening covers.

6. Valve vault cover shall be water tight with drain system.

7. The Contractor shall provide padlocks for new wet well and valve vault covers. The locks shall be keyed alike with a lock provided by the Owner.

503.12 Operation & Maintenance Manuals

Four (4) Operation and Maintenance Manuals shall be submitted to the Utility in both hard copy and .pdf format.

Manuals shall include, at a minimum, the following:

1. Warranty Statement;
2. Pump down test from the initial start-up test;
3. Operation instructions;
4. Maintenance instructions;
5. Recommended spare parts list;
6. Lubrication schedules;
7. Structural diagrams;
8. As-built wiring diagrams;
9. Piping and Instrumentation Drawings (P&ID); and
10. Bill of materials including part numbers, manufacturer and serial numbers

503.13 Spare Parts	At the discretion of the Utility , the Contractor may be required to supply one set of spare parts for each station, including, at a minimum, the following: 1. Impeller; 2. Upper seal assembly; 3. Lower seal assembly; 4. Upper bearing assembly; 5. Lower bearing assembly; 6. Wear rings; and 7. O-Rings and gaskets - two (2) sets.
503.14 Station Warranty	Warranties for the lift station and all equipment, except for the pumps, shall be three (3) years from the date of acceptance per Citizens Energy Group Maintenance Bond requirements. Warranty for the pumps shall be five (5) years from the date of acceptance and per Section 503.06.

Section 504 Low Pressure Pump Stations and Appurtenances

504.01 Introduction

This Section describes, in general terms, the guidelines and requirements for the planning, design, and submittal requirements for low pressure sewer systems.

504.02 General

Low-pressure systems will only be considered in areas where sanitary sewers currently serve the surrounding areas and where conventional sanitary sewer facilities (gravity sewers and/or lift stations) cannot be constructed or are not feasible

Only HDPE pipe material is allowed for low pressure systems. See Section 304 for material requirements.

504.03 Submittal Requirements for Approval and Construction Permit

Approval of low-pressure sewer systems will be evaluated on a case-by-case basis and will only be allowed with prior written approval from the Utility.

At the discretion of the Utility, a lift station may be required in lieu of a low pressure system.

When submitting for an Approval and Construction Permit, the following are required:

1. Written approval from the Utility ;
2. Low pressure system service area – Per Section 504.04;
3. Low pressure system justification – Per Section 501.03;
    a. 50-year life cycle analysis; and
    b. Gravity sewer alternative cost estimate.
4. Low pressure system calculations – Per manufacturer's recommendations and at a minimum the following:
    a. Calculation worksheet – Per manufacturer;
    b. Individual pump curves; and
    c. Make and model number of pumps.
5. Standard Low Pressure System Detail Sheets (Figures 500.02, 500.03, & 500.04);

	6. Identification of the person/entity responsible for the maintenance of the pumps and other components of the system that are not the responsibility of the CWA Authority,Inc.and/or Citizens Westfield; 7. Homeowners Association Covenants and Restrictions, if applicable; and 8. Any other information the Utility deems relevant to review and evaluate the proposed low-pressure system.
504.04 Low Pressure System Service Area	The Applicant shall prepare a Low Pressure System Service Area Study in accordance with all the requirements in Section 202.03.
504.05 Responsibility	CWA Authority, Inc and/or Citizens Westfield will only be responsible for the operation and maintenance of the common force main and the portion of the lateral from the common force main to, and including, the shutoff valve that is to be installed at the R/W or easement line. The homeowner shall be responsible for all piping, pumping equipment, and appurtenances between the building and the shutoff valve. For low-pressure systems CWA Authority, Inc and/or Citizens Westfield is NOT responsible for assuring replacement equipment is compatible with the existing equipment in the system.
504.06 System Design and Layout	Due to the variability of each site, the design of low-pressure systems shall rely on sound engineering judgment and manufacturer's recommendations. The Utility may, if reasonably justified, make any requirement deemed necessary to assure the system performs as intended. The minimum requirements for the design and layout of low-pressure systems shall be per the most recent version of the Standard Detail Sheets, the manufacturers' recommendations, and as follows: 1. Pipe Size Pipe size shall be per pump manufacturer's recommendations with a minimum size of two (2) inches for the common force main and one and one-quarter (1-1/4) inches between the grinder pump and the common

force main. The Engineer shall assure adequate cleansing velocities in the common force main.

2. Overall System Design/Layout

   The design shall be as follows:

   a. Sufficient to achieve a cleansing velocity of two (2) feet per second in the common force main; and

   b. Without any “loops” or parallel pumping segments in the system.

3. Flushing Station

   Flushing Stations shall be per pump manufacturers recommendations but at a minimum the following locations:

   a. At the terminal end of each common force main;

   b. When two (2) or more common force mains are connected; and

   c. Every 1,000 feet.

4. Air Relief Valves

   Air relief valves shall be installed at the following locations:

   a. All high points in the system; and

   b. At intervals of 2,000 feet on all horizontal runs lacking a clearly defined high point.

5. Lateral Assembly Installation

   A lateral assembly installation shall be installed on each service line.

6. Other requirements as deemed necessary.

   See Figures 500.011, 500.012, 500.013, 500.014, 500.015, 500.016, 500.017, 500.018, 500.019,500.020, 500.021, 500.022, 500.023, 500.024, 500.025, 500.026, and 500.027 located in the Appendix for details and requirements.

504.07 Maximum Connections to	No more than one (1) building will be permitted to connect to a Grinder Pump Unit.

Grinder Pump Units	Common Grinder Pumps for one (1) building with multiple residential units are also prohibited, except for the following: 1. Apartment buildings (only one apartment building per grinder pump unit); and 2. Condominiums where different floors have different owners (only one building per grinder pump unit). The intent is to have individual residential units be served by individual Grinder Pump Units. Industrial facilities will be handled on a case-by-case basis.
504.08 Grinder Pump Types	The Engineer and manufacturer are responsible for assuring the system will operate as intended. Design calculations will be provided to the Utility by the Engineer. To assure all the Grinder Pump Units are compatible, all units shall be the same Make, Model Number, and have the same pump performance characteristics, unless justified. Replacement units shall be the same make and model as was originally approved by the Utility. Pump specifications and pump replacement requirements shall be part of the Homeowners Association (HOA) Covenants and Restrictions if a HOA is planned. For connections to gravity sewers, the allowable types of pumps a are as follows: 1. Positive Displacement Pumps 2. Semi-Positive Displacement Pumps 3. Centrifugal Pumps Connections to existing low pressure sewer systems will be evaluated on a case-by-case basis
504.09 Grinder Pump Equipment	Simplex or duplex grinder pumps may be used for single dwelling units. For uses other than single dwelling units, duplex grinder pumps are required. General equipment requirements are as follows: 1. Grinder Pump Station

The grinder pump stations shall be a complete package consisting of all equipment and appurtenances required for a fully operable pumping system. Pump level controls, starter, alarm, piping, fittings, valves, and all accessories shall be part of a factory fabricated package so that after burying the wet well, the field connection of the gravity lateral, discharge line and electrical service line to the control box will complete the installation.

2. Manufacturer

   Each grinder pump station shall be manufactured and assembled by a single manufacturer.

3. Pumps

   The pumps shall be capable of macerating all material in normal domestic and commercial sewage, including reasonable amounts of foreign objects such a wood, plastic, glass, rubber, disposable diapers and the like to a fine slurry that will pass freely through the pump and one and one-quarter (1-1/4) inch discharge pipe.

4. Electrical Motor and Level Controls

   Electrical and level controls shall be provided by the pump manufacturer. All controls shall be mounted so they can be cleaned or replaced without disturbing the pump or piping.

5. Control Panels

   The control panels and all associated components on each standard unit shall be U.L. Approved and installed per manufacturer's recommendations. All equipment associated with each unit shall meet the current requirements of all applicable Federal, State, and Local electrical codes.

   An Electrical Permit is required for each grinder pump unit.

The Engineer and manufacturer are responsible for assuring the equipment is designed properly and will operate in a safe manner.

For installation and contractor certification requirements, see Section 402.09, Grinder Pump Installation.

504.10 Service Line (Grinder Pump) Connections to Low Pressure Mains	For grinder pump connections to HDPE low pressure mains, only electrofusion and heat fusions tees are allowed. Making the connection using compression fittings/couplings is prohibited. For material requirements see Section 304.04 Tapping Tees for Low Pressure Systems.

	For installation and contractor certification requirements see Section 402.08, Connections to HDPE Low Pressure Sewer Systems

.

CHAPTER 600 TESTING

Section 601 General

601.01 Introduction

This Section provides the testing requirements common to all sanitary sewer facilities.

For testing requirements specific to sanitary sewers refer to Section 602.

For testing requirements specific to force mains refer to Section 603.

For testing requirements specific to manholes refer to Section 604.

For testing requirements specific to lift stations refer to Section 605.

601.02 General Testing Requirements

All testing shall be performed under the observation of the RPR. It is the Contractor's responsibility to schedule the testing.

Test results obtained in the absence of the Utility's RPR will not be accepted.

The Contractor shall be responsible for providing all testing equipment at no cost to the CWA Authority, Inc and/or Citizens Westfield.

All pressure gages used shall be calibrated within one (1) year of use for any test. Calibration papers and test date information shall be made available at the request of the Utility's RPR.

The CWA Authority, Inc and/or Citizens Westfield will not assume any liability for the actions of the Owner, Contractor, or their agent(s), in the performance of the required tests.

Section 602 Gravity Sanitary Sewer Testing Requirements

602.01 Introduction

This Section provides the testing requirements specific to gravity sanitary sewers.

For testing requirements specific to force mains refer to Section 603.

For testing requirements specific to manholes refer to Section 604.

For testing requirements specific to lift stations refer to Section 605.

For testing requirements common to all sanitary sewer facilities refer to Section 601.

602.02 General Requirements

All sanitary sewers twenty-four (24) inches and less shall be air tested by means of a low pressure air test per Section 602.03. All sewers larger than twenty-four (24) inches shall be joint tested per Section 602.04.

All sanitary sewers constructed of flexible pipe (PVC and Centrifugally Cast Fiberglass Reinforced Polymer Mortar) shall be tested for deflection by means of a mandrel test per Section 602.06.

602.03 Low Pressure Air Test

All sewers twenty-four (24) inches and less shall be tested by means of a low-pressure air test to detect damaged piping and/or improper jointing. Testing shall be done per ASTM F 1417 for flexible and semi-rigid pipe and ASTM C 924 for RCP. The use of the low pressure air test for flexible and semi-rigid pipe larger that twenty-four (24) inches will be evaluated on a case-by-case basis.

The Contractor is responsible for assuring the test is conducted in a safe manner and all applicable safety procedures are followed.

Do not enter, or allow anyone to enter, the manhole during testing.

The low pressure air test shall be as follows:

1. Waiting Period

   The air test may be done immediately after final backfill is placed in the trench.

2. Equipment

   At a minimum, the following shall be provided:

   a. Mechanical or pneumatic plugs;

   b. Air control panel;

c. Shut-off valve, pressure regulative valve, pressure relief valve, and input pressure gauge. The pressure regulator or relief valve shall be set no higher than 9 psig (6 psig for RCP) to avoid over pressurization;

d. Continuous monitoring pressure gauge having a range of 0 to at least 10 psi. The gauge shall be no less than four (4) inches in diameter with minimum divisions of 0.10 psi and an accuracy of ± 0.04 psi;

e. To reduce the potential for sewer line over-pressurization, two (2) separate hoses shall be used to:

   i. Connect the control panel to the sealed line for introducing low pressure air; and

   ii. Constantly monitor air pressure buildup in the line.

If pneumatic plugs are utilized, a separate hose shall be required to inflate the pneumatic plugs.

3. Testing Procedures

The Test Data Sheet per Appendix B shall be used when conducting the air test.

The procedures for the low pressure air test are as follows:

a. Plug Installation

After a segment of pipe has been backfilled to final grade, securely place and brace suitable test plugs in the ends of the sewer segment and in all lateral stubs included in the test.

All plugs shall be securely restrained and braced prior to and during the test.

b. Line Pressurization

Add air slowly to the test section until the pressure inside the pipe reaches 4.0 psig PLUS the necessary adjustment for groundwater (Maximum 2.0 psig adjustment for a 6.0 psig maximum total).

The air pressure adjustment for groundwater shall be determined by the following:

Adjustment = Depth of Groundwater x 0.43

where:

Adjustment = Adjustment added to the starting pressure of the low-pressure air test, psig. **The maximum adjustment shall be 2.0 psig.**

Depth of Groundwater = As measured above the top of pipe, feet.

0.43 = Conversion factor

Do not exceed 6.0 psig at any time during the low-pressure air test.

The groundwater monitoring wells installed per Section 403.09 shall be used to determine the depth of groundwater. If more than one well was installed, take the average depth of the nearest downstream and nearest upstream monitoring locations. If the monitoring wells were not installed, the adjustment shall be 2.0 psig.

c. Pressure Stabilization

After a constant pressure of 4.0 psig (PLUS the necessary adjustment for groundwater) is reached, the air supply shall be throttled to maintain that internal pressure for at least two (2) minutes. This time permits the temperature of the entering air to equalize with the temperature of the pipe wall.

d. Timing Pressure Loss

When temperatures have been equalized and the pressure stabilized at 4.0 psig (PLUS the necessary adjustment for groundwater), the air hose from the control panel to the air supply shall be shut off or disconnected.

The continuous monitoring pressure gauge shall then be observed while the pressure is decreased to no less than 3.5 psig (PLUS the necessary adjustment for groundwater). At this reading, or any convenient observed pressure reading between 3.5 psig and 4.0 psig (PLUS the necessary adjustment for groundwater), timing shall begin.

A timed pressure drop of either 1.0 psig or 0.5 psig shall be used. The RPR shall determine the appropriate pressure

drop. The allowable time shall be predetermined using either Table 601.01 or 601.02, depending on which pressure drop is used.

When testing RCP sewers, a 1.0 psig pressure drop shall be used.

e. Time adjustment for laterals

No time adjustment for lateral lengths will be allowed.

f. Determination of Line Acceptance

If the time shown for the designated pipe size and length elapses before the pressure drops (1.0 or 0.5 psig), the section of pipe being tested shall have passed the test.

The test may be discontinued once the prescribed time has elapsed even though the pressure drop has not occurred.

g. Determination of Line Failure

If the pressure drops before the appropriate time has elapsed, the air loss rate shall be considered excessive and the section of pipe being tested shall have failed the test.

The Contractor shall be required to uncover, replace, or repair any section of sewer not passing the test. The method of repair shall be per approval of the Utility. Grouting is not an acceptable method of repair.

602.04 Joint Test

All sewers greater than twenty-four (24) inches shall be joint tested using air or water under low pressure. All joints shall be tested. Testing procedures shall be per ASTM C 1103 and as follows:

1. Waiting Period

   The joint test may be done immediately after final backfill is placed.

2. Equipment

   Equipment used shall be made specifically for joint testing of pipelines.

3. Testing Procedures

   a. Joint Test Apparatus Installation

i. Clean the joint and interior joint surfaces.

ii. Move the joint test apparatus into the sewer line to the joint to be tested and position it over the joint. Make sure the end element sealing tubes straddle both sides of the joint and the hoses are attached. For the water test, the bleed-off petcock must be located at top dead center.

iii. Inflate end element sealing tubes with air in accordance with equipment and manufacturer's instructions.

b. Joint Air Test

i. Pressurize the void volume with air to 3.5 psi PLUS the necessary adjustment for groundwater above the top of pipe (maximum 2.0 psi adjustment for a 5.5 psi maximum total). Allow the air pressure and temperature to stabilize before shutting off the air supply. Start the timing of the test.

The air pressure adjustment shall be per Section 602.03.3.b.

ii. Measure the pressure drop for five (5) seconds.

iii. After the joint test is completed, exhaust void volume, then exhaust end element tubes prior to removal of the testing apparatus.

c. Joint Water Test

i. Introduce water into the void volume until water flows evenly from open petcock. Close the petcock and pressurize with water to 3.5 psi PLUS the necessary adjustment for groundwater above the top of pipe (maximum 2.0 psi adjustment for a 5.5 psi maximum total). Shut off the water supply and start test timing.

ii. Measure the pressure drop for five (5) seconds.

iii. After the joint test is completed, exhaust end element tubes which will automatically release the water from the void volume, prior to removal of the testing apparatus.

d. Determination of Line Acceptance

If the pressure holds or drops less than one (1) psi for the five (5) second test time, the joint shall have passed the test.

e. Determination of Line Failure

If the pressure drops one (1) psi or more during the five (5) second test time, the joint shall have failed the test.

If the joint fails, the Contractor shall repair and retest as necessary. The method of repair shall be per approval of the Utility. Grouting is not an acceptable method of repair.

602.05 Water Infiltration Test

All gravity sanitary sewers shall be watertight and free from leakage.

The rate of infiltration into the sanitary sewer system between any two adjacent manholes or the entire system shall not be in excess of 100 gallons per inch of pipe diameter per mile per day (100 gpd/in-dia/mi).

The Contractor may be required to conduct a weir test to determine if the 100 gal/in/mi/day maximum allowable infiltration rate is being exceeded.

The weir test will be required if water is observed in the sewer at any time during the acceptance process. The weir test will be at the sole discretion of the Utility.

The Contractor shall be required to repair all visible leaks, even if the allowable infiltration requirements are met. The method of repair shall be per the approval of the Utility.

Grouting of the joint or crack to repair the leakage shall not be permitted. If the defective portion of the sanitary sewer cannot be located, the Contractor shall remove and reconstruct as much of the work as necessary to obtain a system that passes infiltration requirements.

602.06 Mandrel Deflection Test for Flexible Pipe

All sanitary sewers using flexible pipe shall be tested for deflection by means of a go/no-go mandrel gage or other methods as approved by the Utility.

The mandrel deflection test shall be as follows:

1. Waiting Period

   The mandrel deflection test shall be done no sooner than thirty (30) days after final backfill has been placed.

2. Equipment

   Mandrels shall be constructed with nine (9) or ten (10) arms. Mandrels with fewer than nine (9) arms are not allowed.

   The Length (L) shall be measured between points of contact on the mandrel arm.

The Diameter (D) mandrel dimension shall carry a tolerance of ± 0.01 inches.

3. Allowable Deflection

The allowable deflection shall be based on the pipe type as follows:

a. PVC Pipe

The allowable deflection for PVC pipe shall be 5% of the base inside diameter as determined by ASTM D 3034 and F 679. The dimensions are as follows:

DIMENSIONS FOR MANDREL			
Nominal Pipe Diameter, inches	Length (L) of Mandrel, inches	Base ID of Pipe, inches	Diameter (D)[1] for Deflection of **5%**, inches
8	8.0	7.665	7.28
10	10.0	9.563	9.08
12	10.0	11.361	10.79
15	12.0	13.898	13.20

[1] – The diameter is based on SDR 35 pipe thickness, if thicker pipe is used, the diameter may be adjusted accordingly.

b. Closed Profile PVC

The allowable deflection for Closed Profile PVC shall be 5% based on the inside diameter as determined on a case-by-case evaluation of the pipe design.

c. Centrifugally Cast Fiberglass Reinforced Polymer Mortar Pipe

i. Polyester Resin

The allowable deflection for Centrifugally Cast Fiberglass Reinforced Polymer Mortar pipe made with polyester resin shall be 4% based on the inside diameter as determined on a case-by-case evaluation of the pipe design.

ii. Vinyl Ester Resin

The allowable deflection for Centrifugally Cast Fiberglass Reinforced Polymer Mortar pipe made with vinyl ester resin shall be 3% based on the inside diameter as determined on a case-by-case evaluation of the pipe design.

The Contractor shall provide proving rings to check the mandrel. The proving rings shall be clearly labeled with the dimensions and ASTM Standard.

4. Testing Procedure

a. The mandrel shall be hand pulled through all sections of the sewer lines.

b. Determination of Line Acceptance

If the mandrel can be hand pulled through the entire length of the section tested, the section shall have passed the test.

c. Determination of Line Failure

If the mandrel cannot be hand pulled through the entire length of the section tested, the section shall have failed the test.

The Contractor shall be required to uncover, replace, or repair any section of sewer not passing the mandrel test.

602.07 Air Test or Mandrel Test Failures	To determine the location of any failure, a visual inspection by means of closed circuit televising (CCTV) is recommended when the air or mandrel tests fail. The pipe shall be thoroughly cleaned before televising. If a CCTV inspection was conducted, then a digital copy of the inspection shall be submitted to the Utility for review.
602.08 CCTV Inspection	The Contractor shall clean and televise all sanitary sewers prior to acceptance by the utility. A digital copy of the inspection shall be submitted to the Utility for review. Deformed or damaged mainline pipe, laterals, and joints, damaged controlled settlement lateral joints,

infiltration, or any other conditions observed by the utility and deemed unacceptable shall be repaired by the contractor prior to acceptance.

Section 603 Force Main Testing Requirements

603.01 Introduction

This Section provides the testing requirements for force mains and low pressure systems.

For testing requirements specific to sanitary sewers, refer to Section 602.

For testing requirements specific to manholes refer to Section 604.

For testing requirements specific to lift stations refer to Section 605.

For testing requirements common to all sanitary sewer facilities refer to Section 601.

603.02 General Requirements

All force mains for lift stations and common force mains in low pressure systems shall be tested for leakage by a Hydrostatic Leak Test per Section 603.03.

603.03 Hydrostatic Leak Test

The hydrostatic leak test shall be done in accordance with AWWA standards based on force main material, in accordance with ASTM E 1003, and as follows:

1. Waiting Period

   The hydrostatic test may be done immediately after final backfill is placed and the air and/or vacuum release valves are installed.

2. Equipment

   At a minimum, the following shall be provided:

   a. Hydrostatic Test Pump (jockey pump).

   b. Continuous monitoring pressure gage having a range of 0 – 150 psi graduated in 1 psi increments. The gauge shall be no less than four (4) inches in diameter.

   c. Pipe plugs and/or caps. The plugs/caps shall be equipped with a minimum of two (2) openings for filling/draining the force main and for bleeding air from the line.

   d. Calibrated/graduated container to measure the quantity of water required to be added during the hydrostatic test to maintain the test pressure.

3. Testing Procedures

The procedures for the hydrostatic test are as follows:

a. Plug/cap installation

After the force main has been backfilled to final grade, securely plug and/or bulkhead the ends being tested. Thrust blocking restraints shall be installed at each bulkhead in accordance with the bulkhead manufacturer's requirements.

b. Air and/or Vacuum Release Valves

All air and/or vacuum release valves shall be installed and in normal (open) in-service position during the test.

c. Line Pressurization

i. The force main shall be slowly pressurized with water to 1.5 times the working pressure, or 100 psi, whichever is greater.

ii. Trapped air shall be expelled through high point bleed off valves as the force main is being filled.

iii. When the pressure has been reached, the test pump shall be shut off.

iv. After the force main has been pressurized, measure the pressure drop for two (2) hours.

d. Determination of Force Main Acceptance

If no pressure drop occurs within the two (2) hour test time, the force main shall have passed the test.

e. Determination of Force Main Failure

If a pressure drop occurs within the two (2) hour test time, the force main shall have failed the test.

Contractor shall repair any defects and retest, or retest per the Alternate Testing Procedure.

4. Alternate Testing Procedure

a. Plug/Cap Installation

Same as the above Testing Procedures

b. Line Pressurization

The force main shall be slowly pressurized with water to a test pressure 1.5 times the working pressure or 100 psi, whichever is greater. Water shall be added to maintain the test pressure for two (2) hours.

c. Determination of Force Main Acceptance

The amount of water added during the line pressurization shall be measured. The allowable leakage, in gallons per hour, shall be calculated as follows:

i. For PVC Pipe

$$L = (ND(P)^{1/2}) / 7400$$

ii. For Ductile Iron Pipe

$$L = (SD(P)^{1/2}) / 133{,}200$$

where:

L = allowable leakage, gph

N = number of joints in the pipeline tested

S = length of pipe tested, feet

D = nominal diameter of the pipe, in.

P = average test pressure (psi)

If the amount of water added is less than the allowable leakage, the force main shall have passed the test.

d. Determination of Force Main Failure

If the amount of water added is greater than the allowable leakage, the force main shall have failed the test.

The Contractor shall be required to uncover, replace, or repair the force main and/or air release valve and retest.

603.04 Force Main Continuity Testing	The contractor shall perform continuity testing on all tracing wire place during force main installation. Any wire found not to be continuous shall be repaired or replaced by the Contractor and re-tested.

Section 604 Manhole Testing Requirements

604.01 Introduction

This Section provides the testing requirements for manholes.

For testing requirements specific to sanitary sewers refer to Section 602.

For testing requirements specific to force mains refer to Section 603.

For testing requirements specific to lift stations refer to Section 605.

For testing requirements common to all sanitary sewer facilities refer to Section 601.

604.02 General Requirements

All manholes shall be tested for infiltration by means of a negative air (vacuum) pressure test per Section 604.04.

All internal chimney seals shall be tested per Section 604.05.

604.03 Leakage

All manholes shall be watertight and free from leakage.

Each manhole shall be visually inspected for leakage by the Utility after assembly and backfilling.

If the manhole shows signs of leakage, the manhole shall be repaired to the satisfaction of the Utility and reinspected.

604.04 Negative Air (Vacuum) Test

All manholes shall be tested for infiltration by means of a Negative Air (Vacuum) Pressure Test. Testing shall be done per ASTM C 1244.

All joints between the top of casting to the bottom of the manhole base shall be included in the test.

The vacuum test shall be as follows:

1. Waiting Period

   If possible, each manhole shall be tested immediately after assembly and prior to backfilling. If the test is done after backfilling, the Contractor shall be responsible for re-excavation to locate and correct any leaks that have been identified.

   The vacuum test shall be done <u>BEFORE</u> the chimney seal is installed and tested.

2. Equipment

   Equipment used shall be made specifically for vacuum testing of manholes.

3. Testing Procedures

a. Plug Installation

All pipes entering the manhole shall be temporarily plugged, taking care to securely brace the pipes and plugs to prevent them from being drawn into the manhole.

b. Test Head Installation

The test head shall be placed at the top of the manhole casting in accordance with the manufacturer's recommendations.

c. Air Evacuation

A vacuum of ten (10) inches of mercury shall be drawn on the manhole, the valve on the vacuum line of the test head closed, and the vacuum pump shut off.

d. Timing Pressure Rise

The time for the vacuum reading to drop from ten (10) inches to nine (9) inches of mercury shall be measured. The allowable time shall be determined by using the following:

Minimum Test Times			
Manhole Depth, feet	**Manhole Diameter, in**		
	48	**60**	**72**
	Time, seconds		
8	20	26	33
10	25	33	41
12	30	39	49
14	35	46	57
16	40	52	67
18	45	59	73
20	50	65	81
22	55	72	89
24	59	78	97
26	64	85	105
28	69	91	113
30	74	98	121

e. Determination of Manhole Acceptance

If the time shown for the designated manhole depth and diameter elapses before the vacuum reading drops one (1) inch, the manhole shall have passed the test.

f. Determination of Manhole Failure

If the vacuum reading drops more than one (1) inch before the appropriate time has elapsed, the manhole shall have failed the test.

The Contractor shall be required to uncover, replace, or repair any or all sections of the manhole and retest.

604.05 Chimney Seal Leakage Test

All internal chimney seals shall be tested using a leakage test.

The leakage test shall be as follows:

1. Waiting Period

   The leakage test shall be done AFTER the manhole has passed the vacuum test.

2. Testing Procedures

   a. Install the chimney seal and only the bottom expansion band per manufacturer's recommendation. Fully tighten the bottom band. Do not install the top expansion band.

   b. Pulling the top of the seal away from the manhole frame, pour one (1) gallon of water behind the seal.

   c. Observe the bottom seal for a minimum of one (1) minute for leakage.

   d. Drain the water by folding the top of the chimney seal down.

   e. If the chimney seal passes the test, install the top expansion band per manufacturer's recommendation.

3. Determination of Chimney Seal Acceptance

   If the bottom expansion band holds water without leaking, the chimney seal will have passed the test.

4. Determination of Chimney Seal Failure

   If the bottom expansion band has any leakage during the test time, the chimney seal will have failed the test.

   The Contractor shall be required to remove, replace, or reposition the bottom expansion band and retest.

Section 605 Lift Station Testing

605.01 Introduction	This Section provides the testing requirements for lift stations. For testing requirements specific to sanitary sewers refer to Section 602. For testing requirements specific to force mains refer to Section 603. For testing requirements specific to manholes refer to Section 604. For testing requirements common to all sanitary sewer facilities refer to Section 601.
605.02 General Requirements	The force main and all gravity sanitary sewers constructed as part of the project shall have passed all required tests prior to the startup and final acceptance of the lift station.
605.03 Wet Well Leakage Testing	All wet wells shall be watertight and free from leakage. The wet well shall be visually inspected for leakage by the Utility after assembly and backfilling. All dewatering activities shall be ceased a minimum of eight (8) hours prior to the leak testing. If the wet well shows signs of leakage, it shall be repaired to the satisfaction of the Utility and reinspected.
605.04 Lift Station Testing	All equipment testing shall be observed by the Utility during the lift station's final inspection. Partial testing will not accepted. The testing must be done on the complete lift station. It is not the Utility's responsibility to engage in ANY activity or supply ANY equipment to test and/or accept the lift station. The Contractor shall provide the clean water to run the pumps and perform all tests. The startup and final inspection shall be as follows: 1. Waiting Period The waiting period shall be after BOTH of the following:

a. AFTER the force main, gravity sewers and manholes constructed as part of the project have passed all required tests contained in Sections 602, 603, and/or 604.

b. After ALL equipment has been installed, been determined to be in working order by the Contractor and manufacturer, and been previously tested by the manufacturer.

2. Equipment

The Contractor or manufacturer shall provide all necessary equipment to safely complete all the tasks necessary to test and accept the lift station.

3. Testing Procedures

A lift station checklist provided by the Utility shall be completed during the start-up and final inspection.

The test shall verify all equipment performs in accordance with the design and the requirements of this Manual. Procedures for each component shall be determined by the Utility at the time of startup. At a minimum, the following shall be tested:

a. Pumping rate for all pumps in gpm;

b. Communications equipment;

c. Programmable Logic Controller;

d. All electronic equipment;

e. All mechanical equipment;

f. All instrumentation and control equipment;

g. All programming;

h. Incoming power;

i. The overall operating condition of the lift station; and

j. Any other test the Utility deems necessary.

4. Calibration

All measuring equipment supplied for the lift station shall be calibrated prior to acceptance. Calibration test results shall be made available upon request.

The measuring equipment shall include at a minimum the following:

a. Level Transducers;

b. Flow Meters;

c. Gauges; and

d. Other equipment as deemed necessary by the Utility.

5. Determination of Lift Station Acceptance

   If the station performs to the satisfaction of the Utility, as designed, and per the requirements of this Manual, the lift station shall have passed the test.

6. Determination of Lift Station Failure

   If the station does not perform to the satisfaction of the Utility, as designed, and per the requirements of this Manual, the lift station shall have failed the test.

   The Contractor shall be required to correct all deficiencies and retest.

TABLE 601.01

MINIMUM SPECIFIED TIME REQUIRED FOR A 1.0 PSIG PRESSURE DROP FOR SIZE AND LENGTH OF PIPE FOR ALL PIPE

1 Pipe Diameter (in)	2 Minimum Time (min:sec)	3 Length for Minimum time (ft)	4 Time for Longer Length	Specification Time for Length (L) Shown (min:sec)								
				100 ft	150 ft	200 ft	250 ft	300 ft	350 ft	400 ft	450 ft	500 ft
4	3:46	597	.380 L	3:46	3:46	3:46	3:46	3:46	3:46	3:46		
6	5:40	398	.854 L	5:40	5:40	5:40	5:40	5:40	5:40	5:42		
8	7:34	298	1.520 L	7:34	7:34	7:34	7:34	7:36	8:52	10:08		
10	9:26	239	2.374 L	9:26	9:26	9:26	9:53	11:52	13:51	15:49		
12	11:20	199	3.418 L	11:20	11:20	11:24	14:15	17:05	19:56	22:47		
15	14:10	159	5.342 L	14:10	14:10	17:48	22:15	26:42	31:09	35:36	40:04	44:31
18	17:00	133	7.692 L	17:00	19:13	25:38	32:03	38:27	44:52	51:16	57:41	64:06
21	19:50	114	10.470 L	19:50	26:10	34:54	43:37	52:21	61:00	69:48	78:31	87:15
24	22:40	99	13.674 L	22:47	34:11	45:34	56:58	68:22	79:46	91:10	102:33	113:57
27[1]	25:30	88	17.306 L	28:51	43:16	57:41	72:07	86:32	100:57	115:57	129:48	144:13
30[1]	28:20	80	21.366 L	35:37	53:25	71:13	89:02	106:50	124:38	142:26	160:15	178:03
33[1]	31:10	72	25.852 L	43:05	64:38	86:10	107:43	129:16	150:43	172:21	193:53	215:26
36[1]	34:00	66	30.768 L	51:17	76:55	102:34	128:12	153:50	179:29	205:07	230:46	256:40
Reinforced Concrete Pipe (RCP)												
24	3.6	100	0.036L	3:36	5:24	7:12	9:00	10:48	12:36	14:24	16:12	18:00

[1]- Per Section 602.03, the low pressure air test for these pipe diameters can only be conducted with prior approval of the Utility

.

TABLE 601.02

MINIMUM SPECIFIED TIME REQUIRED FOR A 0.5 PSIG PRESSURE DROP FOR SIZE AND LENGTH OF PIPE FOR FLEXIBLE AND SEMI-RIGID PIPE

1 Pipe Diameter (in)	2 Minimum Time (min:sec)	3 Length for Minimum time (ft)	4 Time for Longer Length	Specification Time for Length (L) Shown (min:sec)								
				100 ft	150 ft	200 ft	250 ft	300 ft	350 ft	400 ft	450 ft	500 ft
4	1:53	597	0.190 L	1:53	1:53	1:53	1:53	1:53	1:53	1:53		
6	2:50	398	0.427 L	2:50	2:50	2:50	2:50	2:50	2:50	2:51		
8	3:47	298	0.760 L	3:47	3:47	3:47	3:47	3:48	4:26	5:04		
10	4:43	239	1.187 L	4:43	4:43	4:43	4:57	5:56	6:55	7:54		
12	5:40	199	1.709 L	5:40	5:40	5:42	7:08	8:33	9:58	11:24		
15	7:05	159	2.671 L	7:05	7:05	8:54	11:08	13:21	15:35	17:48	20:02	22:16
18	8:30	133	3.846 L	8:30	9:37	12:49	16:01	19:14	22:26	25:38	28:51	32:03
21	9:55	114	5.235 L	9:55	13:05	17:27	21:49	26:11	30:32	34:54	39:16	43:38
24	11:20	99	6.837 L	11:24	17:57	22:48	28:30	34:11	39:53	45:35	51:17	56:59
27[1]	12:45	88	8.653 L	14:25	21:38	28:51	36:04	43:16	50:30	57:42	64:54	72:06
30[1]	14:10	80	10.683 L	17:48	26:43	35:37	44:31	53:25	62:19	71:13	80:07	89:01
33[1]	15:35	72	12.926 L	21:33	32:19	43:56	53:52	64:38	75:24	86:10	96:57	107:43
36[1]	17:00	66	15.384 L	25:39	38:28	51:17	64:06	76:55	89:44	102:34	115:23	128:12

[1]- Per Section 602.03, the low pressure air test for these pipe diameters can only be conducted with prior approval of the Utility.

Appendix A- EXAMPLE LOW PRESSURE AIR TESTS

A. **GENERAL**

The purpose of this Section is to illustrate the proper application of this recommended practice with regard to appropriate test time selection. The examples that follow include a variety of conditions which may be encountered in the field.

1. **EXAMPLE A**

A manhole to manhole reach of nominal 12-inch pipe is 350 feet long. No lateral connections exist in the reach. What is the required test time for a 0.5 psig pressure drop?

Solution: The required test time can be read directly from Table 600.02. For 350 feet of 12-inch pipe, the required test time is 9:58 (9 minutes and 58 seconds).

2. **EXAMPLE B**

What should the required test time be for a 1.0 psig pressure drop in 327 feet of nominal 8-inch diameter pipe between two manholes?

Solution: The exact test time is easily calculated by using Table 601.01. Table 601.01 is used because a 1.0 psig pressure drop is specified. Since 327 feet exceeds the minimum test time for an 8-inch pipeline, the fourth column in Table 601.01shall be used to quickly calculate the required test time as follows:

$$T = 1.520\ L$$

$$T = 1.520 \times 327\ \text{ft.} = 497\ \text{seconds}$$

Therefore, the required test time for a 1.0 psig pressure drop is 497 seconds, or 8 minutes and 17 seconds (8:17).

3. **EXAMPLE C**

A manhole-to-manhole reach of nominal 24-inch pipe is 82-feet long. What is the required test time for a 0.5 psig pressure drop?

Solution: Table 600.02 must be used because a 0.5 psig pressure drop is specified. Since 82 feet is less than the 99 foot length associated with the minimum test for a 24-inch pipeline, the minimum test time shall apply. Thus, the required test time for a 0.5 psig pressure drop must be 11 minutes and 20 seconds (11:20).

4. **EXAMPLE D**

A 412 foot section of nominal 15-inch sewer pipe has been readied for air testing. A total of 375 feet of nominal 6-inch lateral piping and 148 feet of nominal 4-inch lateral piping branch off of the 15-inch sewer line. All laterals have been capped and/or plugged and will be tested together with the 15-inch main line. The specified pressure drop which will be timed is 0.5 psig. What is the appropriate test time for this pipe network?

Solution: All lateral sewer sizes and lengths may be disregarded since their influence is generally not significant enough to warrant computation. Table 600.02 must be used for a 0.5 psig pressure drop. The fourth column in the Table provides the appropriate

formula for calculating the required test time because 412 feet is longer than the third column valve of 159 feet.

$$T = 2.671\ L$$

$$T = 2.671 \times 412 = 1{,}100 \text{ seconds.}$$

The required test time is 1,100 seconds or 18 minutes, 20 seconds (18:20

Appendix B- Estimated Average Daily Flow (ADF)

Agricultural labor camp	50 per occupant
Airport	3 per passenger plus 20 per employee
Apartment/Condominium, multi-family dwelling: one bedroom	200 per unit
Apartment/Condominium, multi-family dwelling: two bedroom	300 per unit
Apartment/Condominium, multi-family dwelling: three bedroom	350 per unit
Apartment/Condominium, one and two family dwelling	150 per bedroom
Assembly Hall	3 per seat
Athletic field (baseball, soccer, football, etc.)	1 per participant and spectator with additions for concessions
Auction and flea market: with full kitchen	5 per customer
Auction and flea market: with warming kitchen	4 per customer
Auction and flea market: without kitchen	3 per customer
Banquet caterer	10 per person
Bar (without food)	10 per seat
Barber shop	90 per chair
Beauty salon: perm or color changes	35 per customer
Beauty salon: cut with wash	10 per customer
Beauty salon: cut without wash	5 per customer
Bed and breakfast	150 per bedroom
Bowling alley (with bar and/or food)	125 per lane
Bowling alley (without food	75 per lane
Bus station	3 per passenger
Campground (organizational) with flush toilets, showers, central kitchen	40 per camper
Campground (organizational) without flush toilets, privy use, central dining hall, no showers, hand washing	20 per camper
Campground (recreational) with individual sewer connection	100 per campsite
Campground (recreational) without individual sewer connection	50 per campsite
Car Wash	240 per sq. ft. inside
Church with full kitchen	5 per sanctuary seat
Church with warming kitchen	4 per sanctuary seat
Church without kitchen	3 per sanctuary seat
Conferences	10 per attendee
Correctional facilities	120 per inmate
Day care center	20 per person
Dentist	200 per chair plus 75 per employee
Doctor’s office	75 per doctor, 75 per nurse, 20 per support staff
Estimated Average Daily Flow (ADF)	ADF (gallons per day)
Factory (industrial discharger) with showers	35 per employee
Factory (industrial discharger) without showers	20 per employee
Fire station: manned	75 per firefighter
Fire station: unmanned	35 per firefighter
Food service operations: cocktail lounge or tavern	35 per seat

Food service operations: restaurant (not open 24 hours)	35 per seat
Food service operations: restaurant (open 24 hours)	50 per seat
Food service operations: restaurant (not open 24 hours but located along an interstate)	50 per seat
Food service operations: (open 24 hours but located along an interstate)	70 per seat
Food service operations: tavern	35 per seat
Food service operations: curb service (drive-in)	50 per car space
Golf comfort station	3 per 50% of maximum number of golfers
Golf main clubhouse	5 per golfer with additions for food service and showers
Hospital, medical facility	200 per bed
Hotel	100 per room
Kennels and vet clinics (sum of all of the following services at a facility):	
1) a. cages	5 per cage
b. inside runs	10 per run
c. outside runs	20 per run
d. grooming	10 per animal
e. surgery plus	50 per surgery room
2) staff	75 per veterinary doctor plus 7 per veterinary assistant plus 20 per support staff
Laundry	200 per machine
Mental health facility	100 per patient
Mobile home park	200 per lot
Motel	100 per bed
Nursing home	100 per bed
Office building without showers	20 per employee
Office building with showers	35 per employee
Outpatient surgical center	50 per patient
Picnic area	5 per visitor
Race tracks	5 per attendee, 20 per staff
Rooming house	100 per renter
School: elementary	15 per pupil
School: secondary	25 per pupil
School with dormitory	100 per bed
Service station: convenience store/service center	1,000 with additions for food preparations and seating
Service station with only two (2) restrooms	400 per restroom
Service station with only unisex restroom	600 per restroom
Service station: automatic self-cleaning bathroom	60 per day
Shopping center	0.1 per square foot of floor space plus 20 per employee
Swimming pool bathhouse	10 per swimmer
Theater: drive-in	5 per car space
Theater: inside building	5 per seat

Appendix C- Test Reports

Sewer Force Main Alternate Test Method

Date: _____
Weather: _____

Right-of-Way:	**Project/Subdivision Name:**
Contractor:	**Reference Plan:**
Testing Conducted by:	**RPR:**

Testing procedure shall be as specified in AWWA C600 and/or C900 (latest revisions) – Standard Hydrostatic Test Method Of DIP and Polyvinyl Chloride Pipe (PVCP) Sewer Force Mains, further as modified by the required test time shall be two (2) hours, the required pressure shall be 1.5 times the working pressure of the pipe or 100 psi and the allowable leakage shall not exceed "L" in the following formulas:

For PVC Pipe

$$L = (ND(P)^{1/2})/7400$$

For Ductile Iron Pipe

$$L = (SD(P)^{1/2})/133,200$$

Where:
L = allowable leakage (gph)
N = number of joints in the pipeline tested
S = length of pipe tested (feet)
D = nominal diameter of the pipe (in)
P = average test pressure (psi)

Pipe Diameter & Type	Pipe Length Tested, ft.	Starting Pressure (psi)	Amount of Water Added (gal)	Allowable Leakage (gph)	Actual Leakage (gph)	Pass Or Fail

Comments: _____
_____
_____

Sewer Force Main Test Report
Hydrostatic Leak Test

Date: _____
Weather: _____

Right-of-Way:	**Project/Subdivision Name:**
Contractor:	**Reference Plan:**
Testing Conducted by:	**RPR:**

Testing procedure shall be as specified in AWWA C600 and/or C900 (latest revisions) – Standard Hydrostatic Test Method Of (DIP and PVCP) Sewer Force Mains and ASTM 1003.

The required test time shall be two (2) hours, the required pressure shall be 1.5 times the working pressure of the pipe or 100 psi whichever is greater.

Pipe Diameter (inches)	Pipe Type	Pipe Length Tested, ft	Starting Pressure (psi)	Ending Pressure (psi)	Pressure Loss (psi)	Pass Or Fail

Comments:_____
_____
_____

Sewer Force Main Test Report

Date: _____
Weather: _____

Right-of-Way:	**Project/Subdivision Name:**
Contractor:	**Reference Plan:**
Testing Conducted by:	**RPR:**

Testing procedure shall be as specified in AWWA C600 and/or C900 (latest revisions) – Standard Hydrostatic Test Method Of (DIP and PVCP) Sewer Force Mains, further as modified by the required test time shall be two (2) hours, the required pressure shall be 1.5 times the working pressure of the pipe and the allowable leakage shall not exceed "L" in the following formulas:

For PVC Pipe

$$L = (ND(P)^{1/2})/7400$$

For Ductile Iron Pipe

$$L = (SD(P)^{1/2})/133{,}200$$

Where:
L = allowable leakage (gph)
N = number of joints in the pipeline tested
S = length of pipe tested (feet)
D = nominal diameter of the pipe (in)
P = average test pressure (psi)

Pipe Diameter & Type	Pipe Length Tested	Starting Pressure (psi)	Ending Pressure (psi)	Allowable Leakage (gph)	Actual Leakage (gph)	Pass Or Fail

Comments: _____
_____
_____

Sewer Manhole Test Report

Date: _____
Weather: _____

Right-of-Way:	**Project/Subdivision Name:**
Contractor:	**Reference Plan:**
0Testing Conducted by:	**RPR:**

Testing procedure shall be as specified in ASTM C1244 (latest revision) – Standard Test Method For Concrete Sewer Manholes by Negative Air Pressure (Vacuum) Test, further as modified by the allowable vacuum loss shall not exceed 1" Hg (mercury) within one (1) minute for all manhole sizes.

Station/ Manhole No.	Manhole Diameter & Depth	Starting Vacuum (Inch Hg)	Ending Vacuum (Inch Hg)	Vacuum Loss (Inch Hg)	Pass or Fail

Comments:_____
_____
_____

Sewer Manhole Test Report
Page 2

Station/ Manhole No.	Manhole Diameter & Depth	Starting Vacuum (Inch Hg)	Ending Vacuum (Inch Hg)	Vacuum Loss (Inch Hg)	Pass or Fail

Comments:_____

_____

_____

Air Pressure Test Data Sheet

Test No. _____

Job Name, Location, Project Number or Subdivision
Name_____

Field Test Date (To be filled in by Inspector)

Date				Specified Maximum Pressure Drop: _____psig							
Identification of Pipe Material Installed											
Pipe under Test				Field Test Operations Data							
Upstream MH No.	Downstream MH No.	Dia. D (in)	Length L (ft)	Time from Table___ (min:sec)	Air Pressure Adjustment (psig)	Initial Pressure (psig)	Time allowed for pressure to stabilize (min)	Start Pressure (psig)	Stop Pressure (psig)	Elapsed Time (min:sec)	Pass or Fail (P or F)
Inspectors name and title:											
Signature of Inspector:											
If a section fails, the following items must be completed:											
Identify section(s) that failed:											
Leak (was) (was not) identified. Method used:											
Description of leak:						Corrective Action taken:					
Results after repair refer to Test No.:						Inspector:					

Appendix D- Drawings

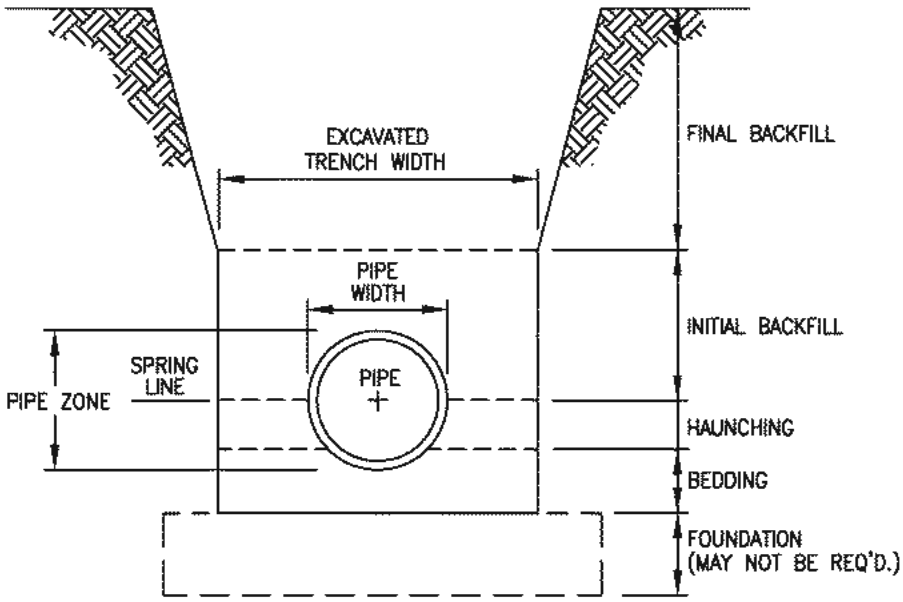

NOT TO SCALE

CITIZENS ENERGY GROUP

TERMS USED IN TRENCH DETAILS

FIGURE 100.01

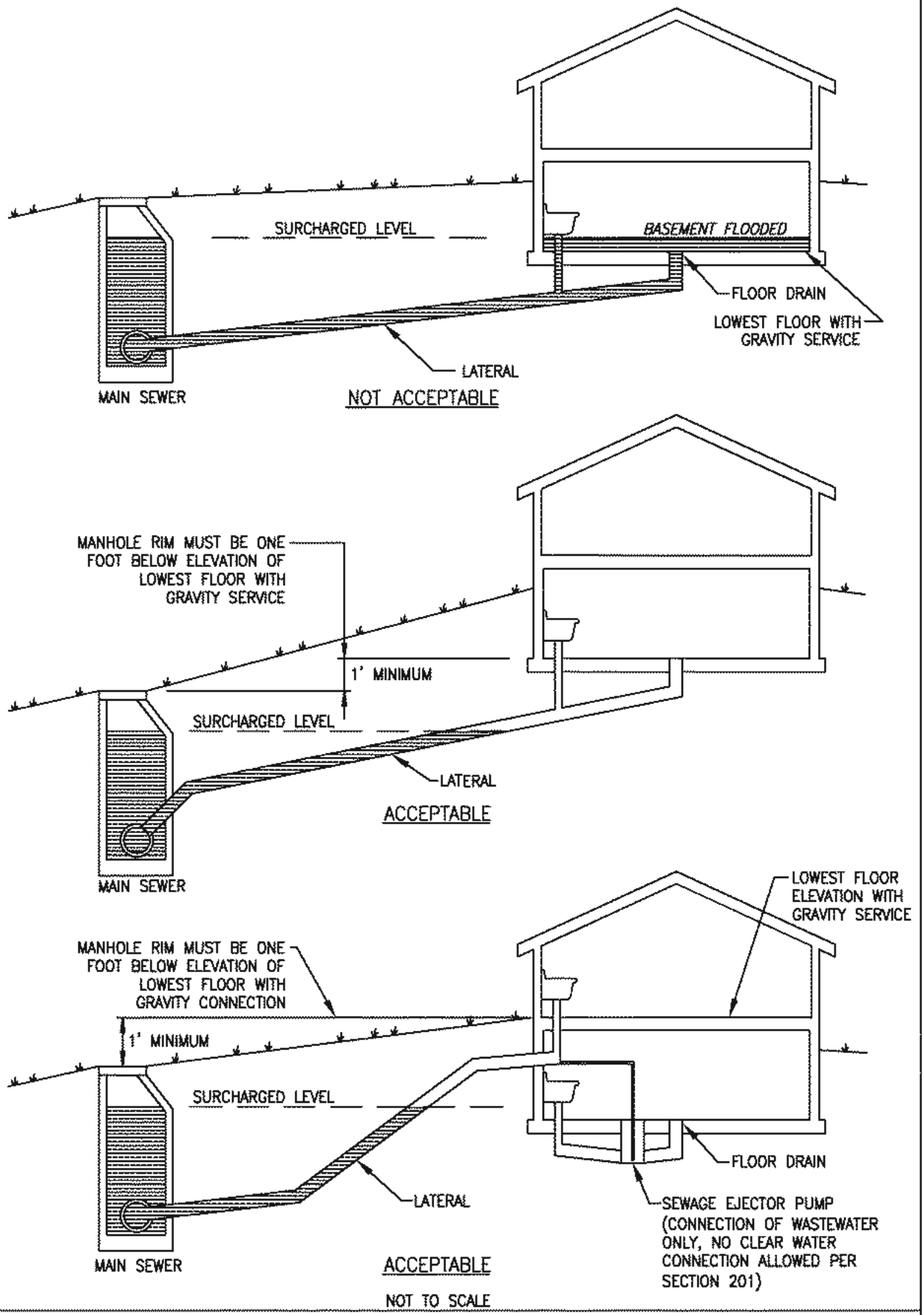

CITIZENS ENERGY GROUP

MINIMUM ELEVATIONS FOR GRAVITY CONNECTION

FIGURE 200.01

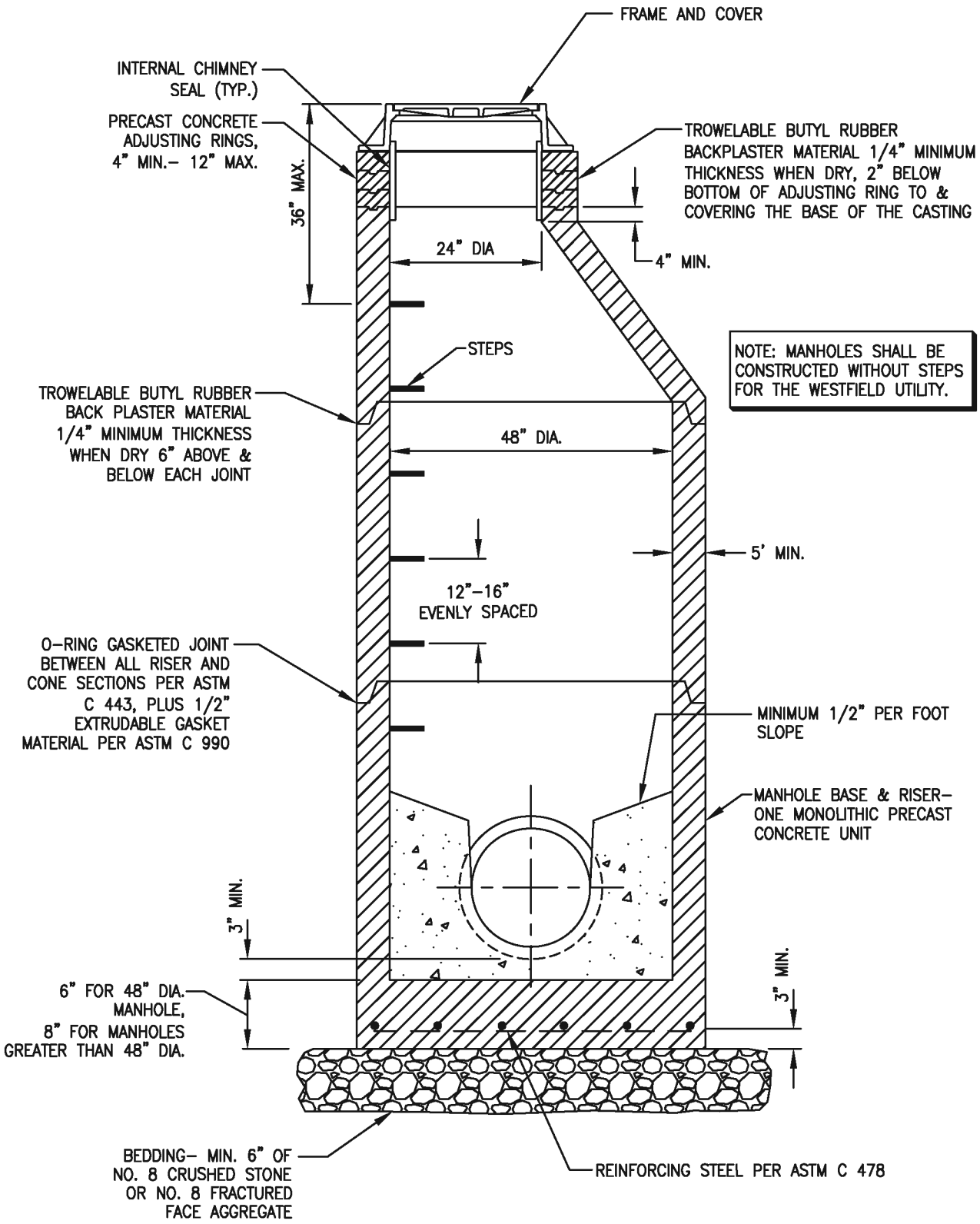

NOT TO SCALE

CITIZENS ENERGY GROUP

STANDARD MANHOLE FOR PIPE SIZES 8"–24" (STRAIGHT THROUGH)

FIGURE 300.01

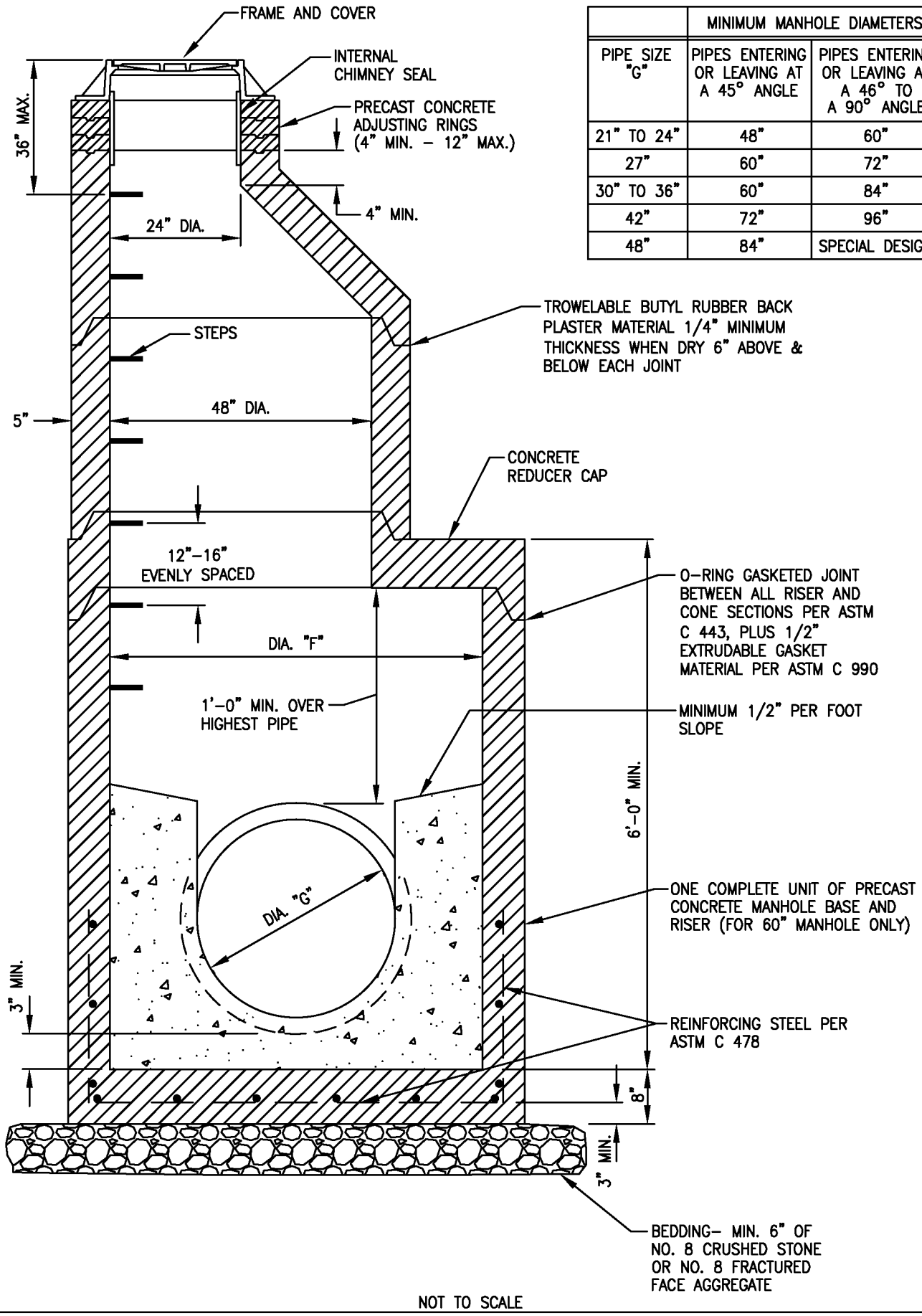

	MINIMUM MANHOLE DIAMETERS	
PIPE SIZE "G"	PIPES ENTERING OR LEAVING AT A 45° ANGLE	PIPES ENTERING OR LEAVING AT A 46° TO A 90° ANGLE
21" TO 24"	48"	60"
27"	60"	72"
30" TO 36"	60"	84"
42"	72"	96"
48"	84"	SPECIAL DESIGN

NOT TO SCALE

CITIZENS ENERGY GROUP

MANHOLE BASE, RISER & REDUCER CAP FOR PIPES 21"–48"

FIGURE 300.02

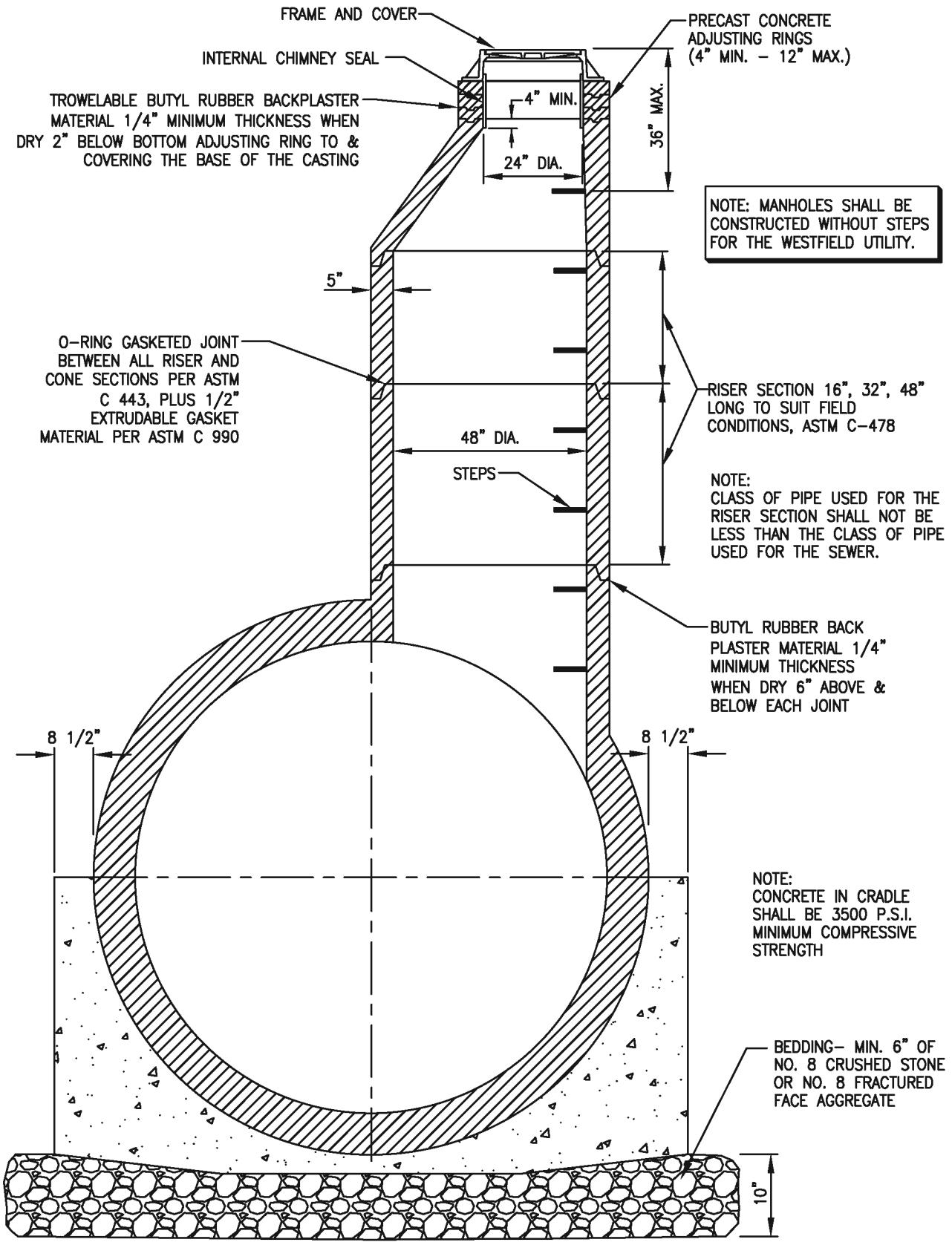

NOT TO SCALE

CITIZENS ENERGY GROUP

SPECIAL MANHOLE, 48"–144" SEWERS

FIGURE 300.03

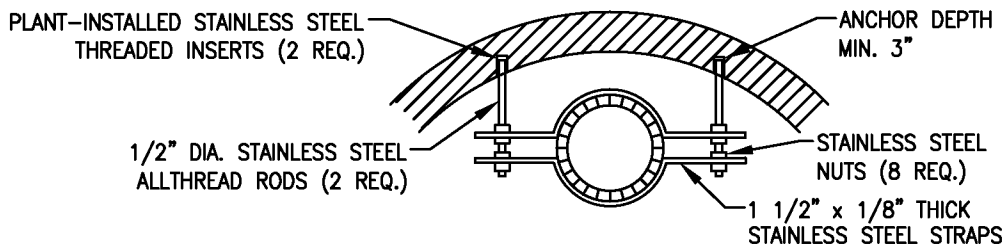

DROP PIPE ANCHOR DETAIL
TOP VIEW

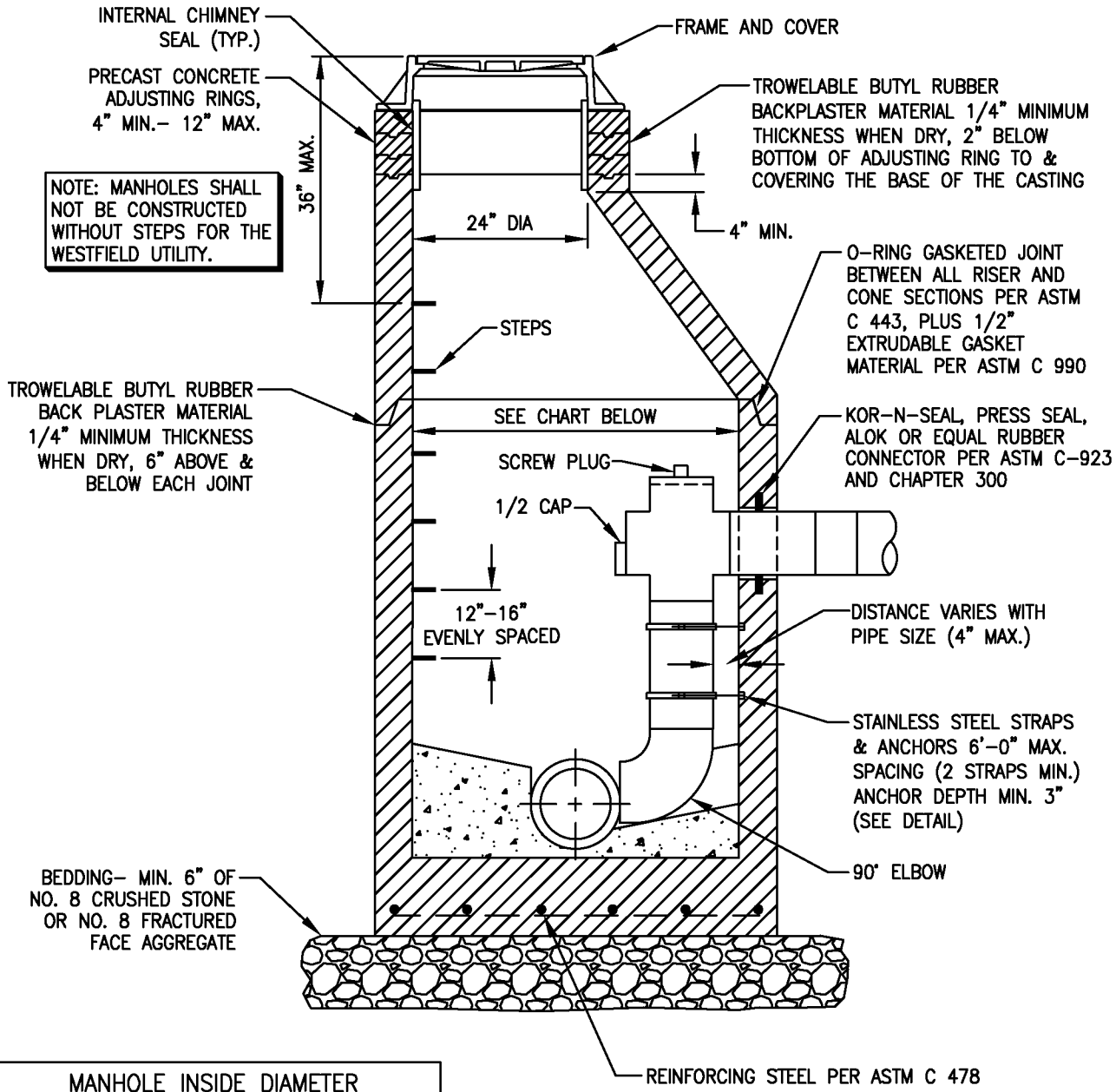

NOTE: MANHOLES SHALL NOT BE CONSTRUCTED WITHOUT STEPS FOR THE WESTFIELD UTILITY.

MANHOLE INSIDE DIAMETER		
TOTAL NUMBER OF INCOMING LINES	PIPE SIZE	INSIDE MANHOLE DIAMETER
1	8"–12"	60"
2 OR 3	8"–12"	72"

NOT TO SCALE

CITIZENS ENERGY GROUP

INTERNAL DROP MANHOLE

FIGURE 300.04

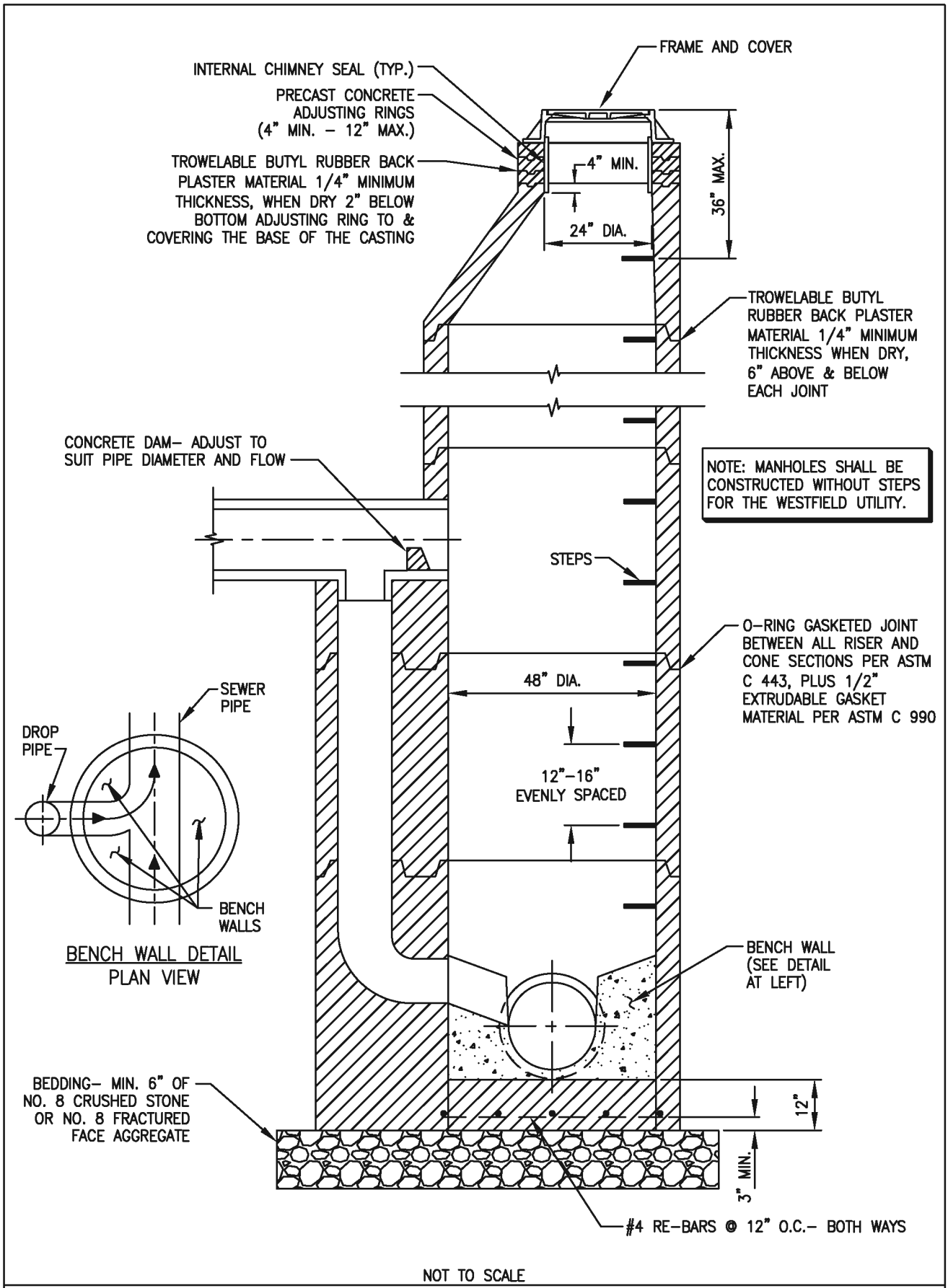

NOT TO SCALE

CITIZENS ENERGY GROUP

PRECAST DROP MANHOLE

FIGURE 300.05

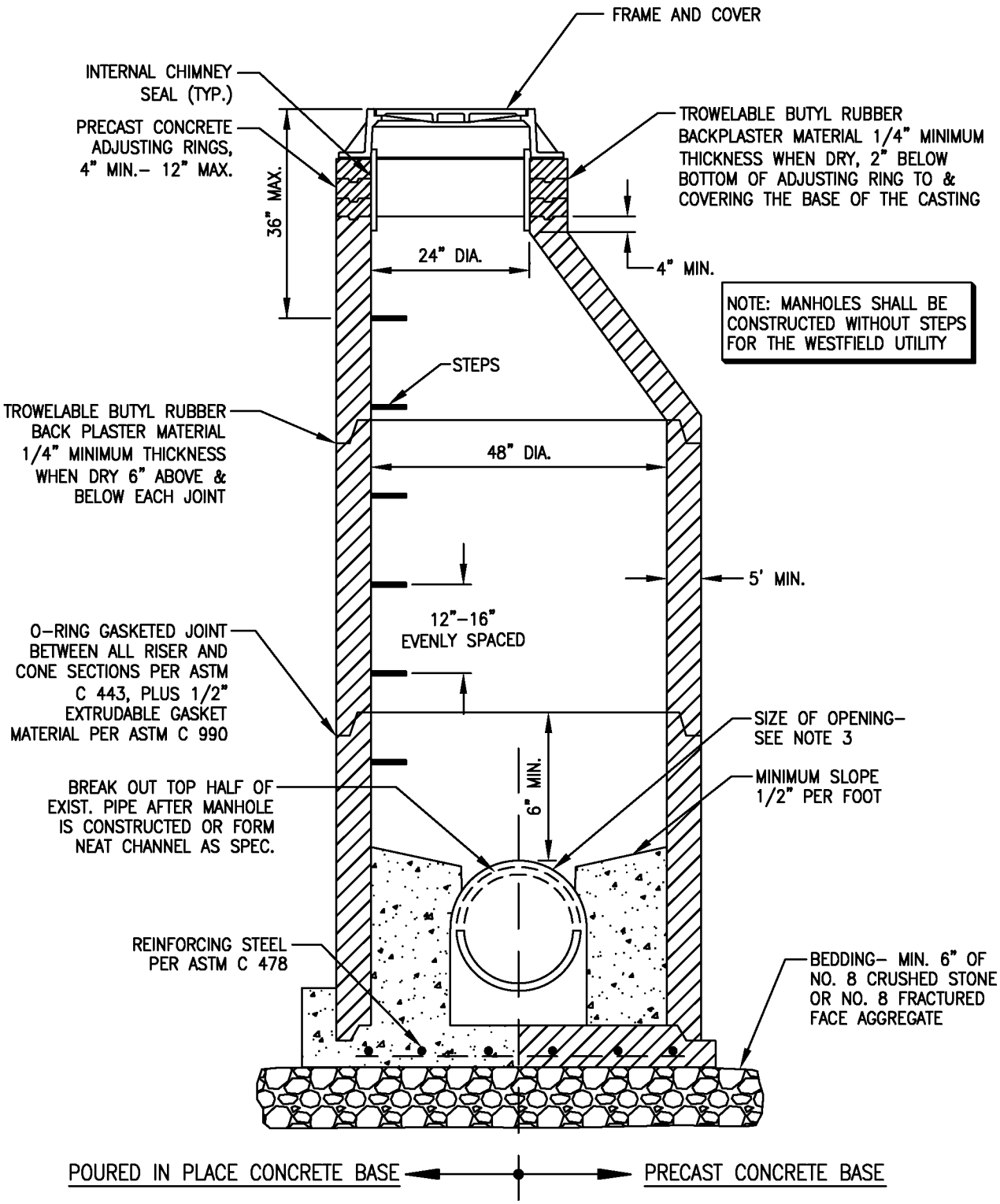

NOTES

1. DOGHOUSE OPENING MAY ONLY BE USED WHEN PLACING A NEW MANHOLE OVER AN EXISTING LINE; OTHERWISE, THE OPENING MUST BE CAST. SIZE, LOCATION AND ANGLE OF ENTRY SHOULD BE AS REQUIRED BY THE PLANS.
2. OPENINGS IN PRECAST UNITS ARE TO BE 4" MINIMUM TO 8" MAXIMUM LARGER THAN THE OUTSIDE DIAMETER OF THE PROPOSED PIPE.
3. INVERT SHAPING TO CONFORM TO FIGURE 300.07.

NOT TO SCALE

CITIZENS ENERGY GROUP

SANITARY SEWER DOGHOUSE MANHOLE

FIGURE 300.06

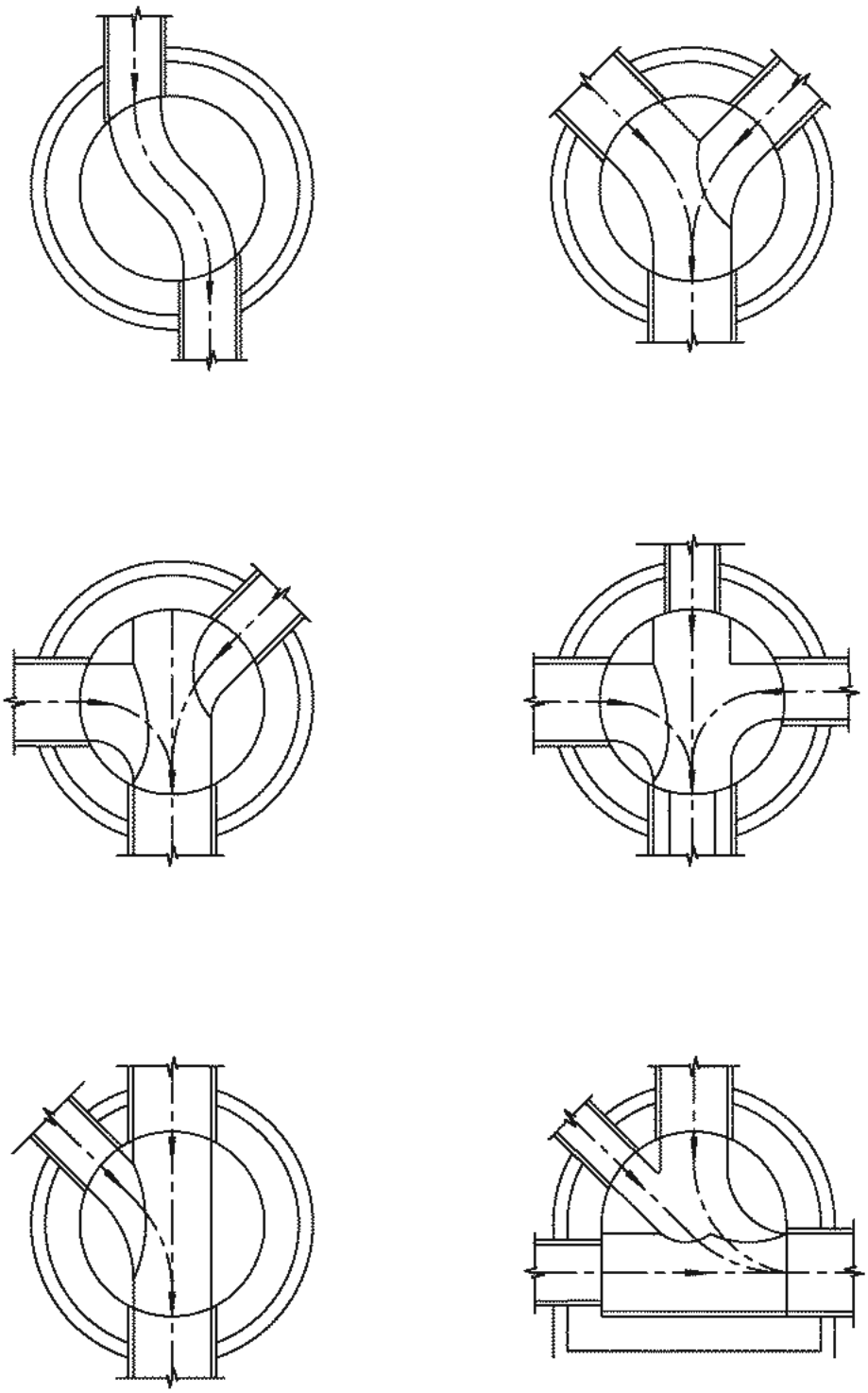

SANITARY SEWER
BENCH SLOPE: 1/2" PER FOOT

NOT TO SCALE

CITIZENS ENERGY GROUP

STANDARD MANHOLE BENCHES

FIGURE 300.07

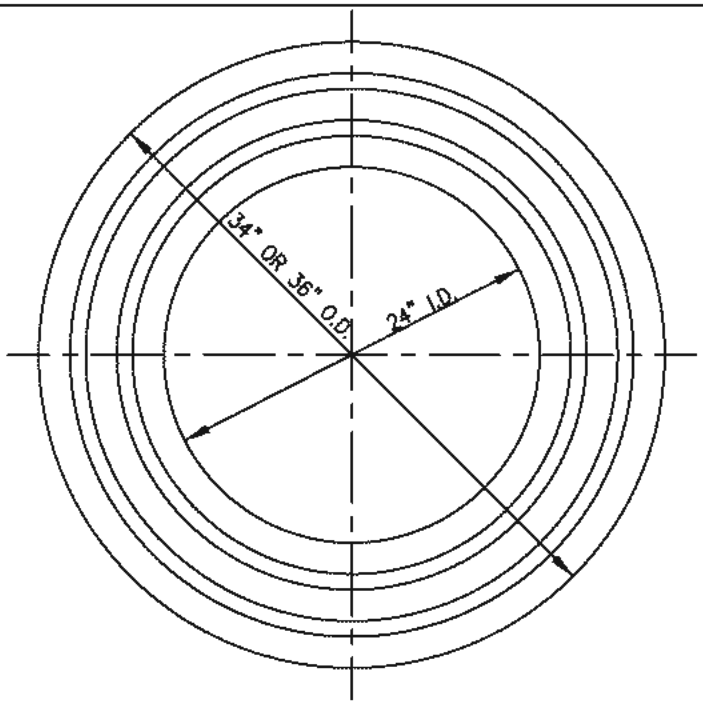

PLAN VIEW

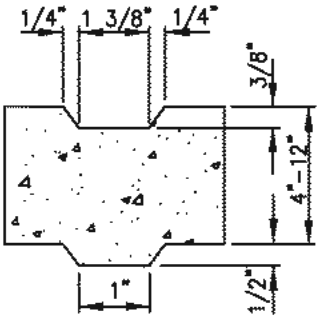

SECTION

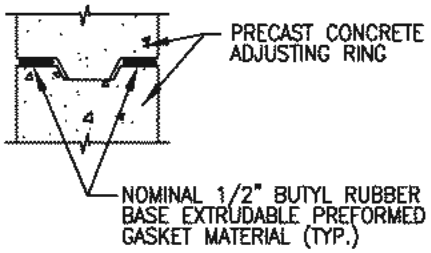

GASKET DETAIL

– OR –

– OR –

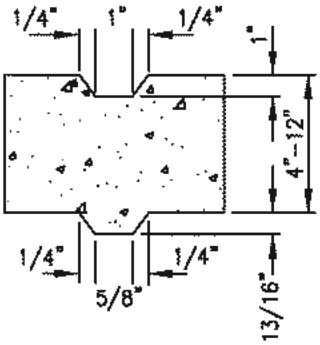

SECTION

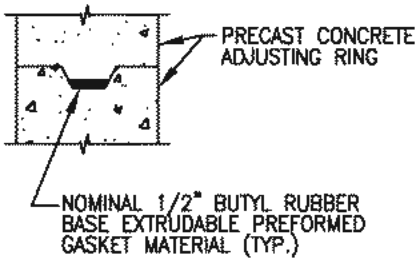

GASKET DETAIL

NOT TO SCALE

CITIZENS ENERGY GROUP

ADJUSTING RING

FIGURE 300.08

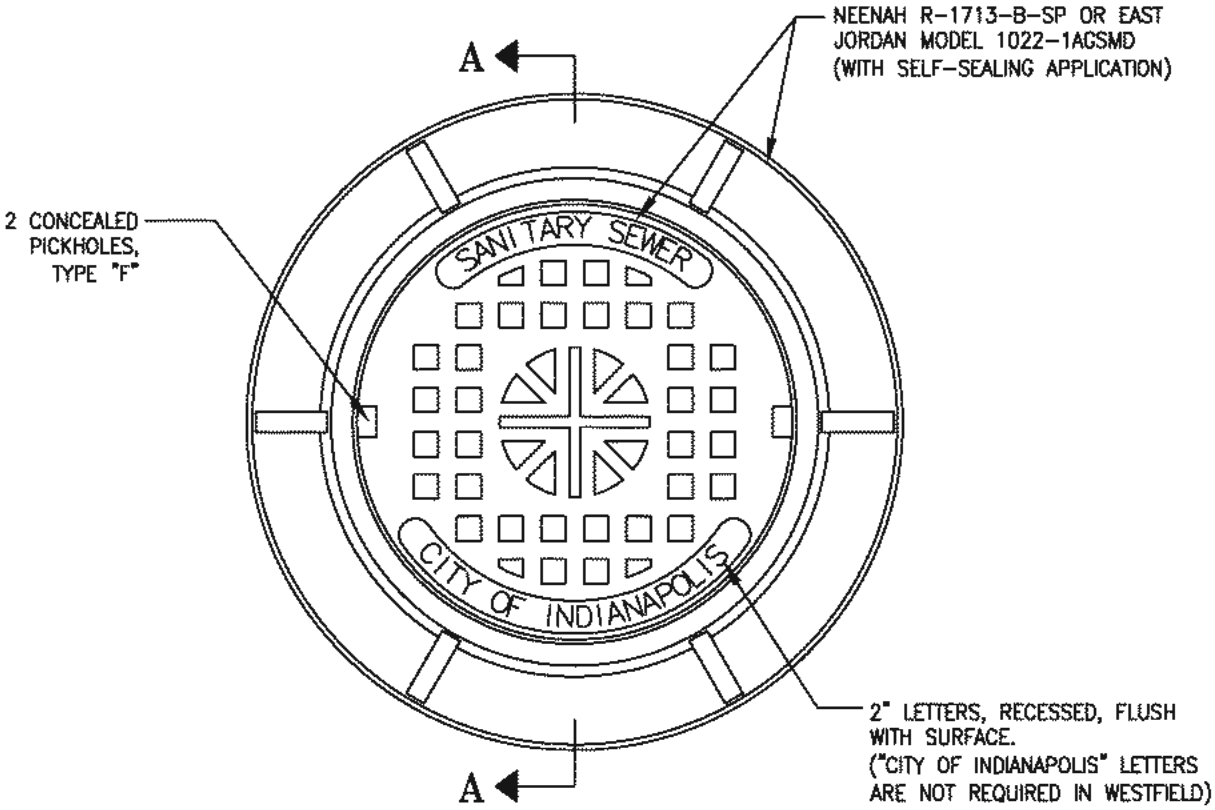

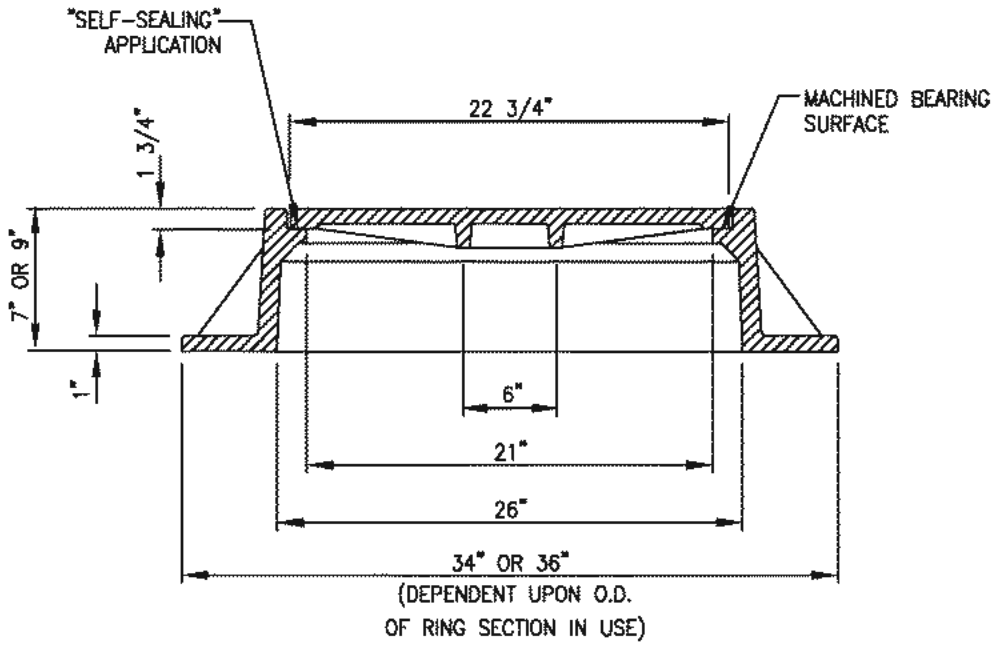

SECTION "A-A"

NOT TO SCALE

CITIZENS ENERGY GROUP

SANITARY SEWER MANHOLE FRAME AND COVER- STANDARD MANHOLE

FIGURE 300.09

GENERAL NOTES

1. ALL TANK JOINTS SHALL BE SEALED WATERTIGHT WITH BUTYL RUBBER EXTRUDIBLE PERFORMED GASKET MATERIAL, HAMILTON KENT-SEAL OR EQUAL.
2. ALL OUTSIDE RISER RINGS SHALL BE WATERPROOFED ½" WITH TROWELABLE GRADE BUTYL RUBBER BACK PLASTER.
3. PIPE SEALS SHALL BE TUF-TITE, POLYLOK, OR EQUAL.
4. CITIZENS MAY ACCEPT ALTERNATE GREASE TRAP DESIGNS ON A CASE-BY-CASE BASIS

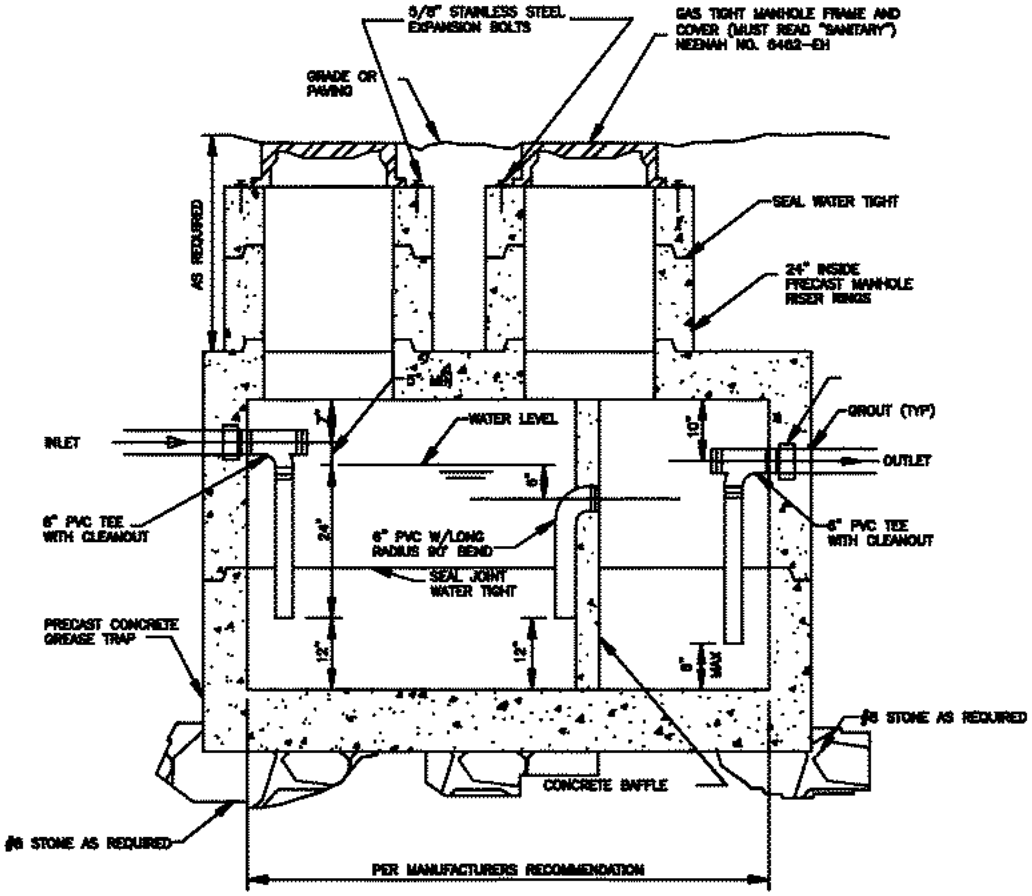

NOT TO SCALE

CITIZENS ENERGY GROUP
GREASE TRAP DETAIL
FIGURE 300.10

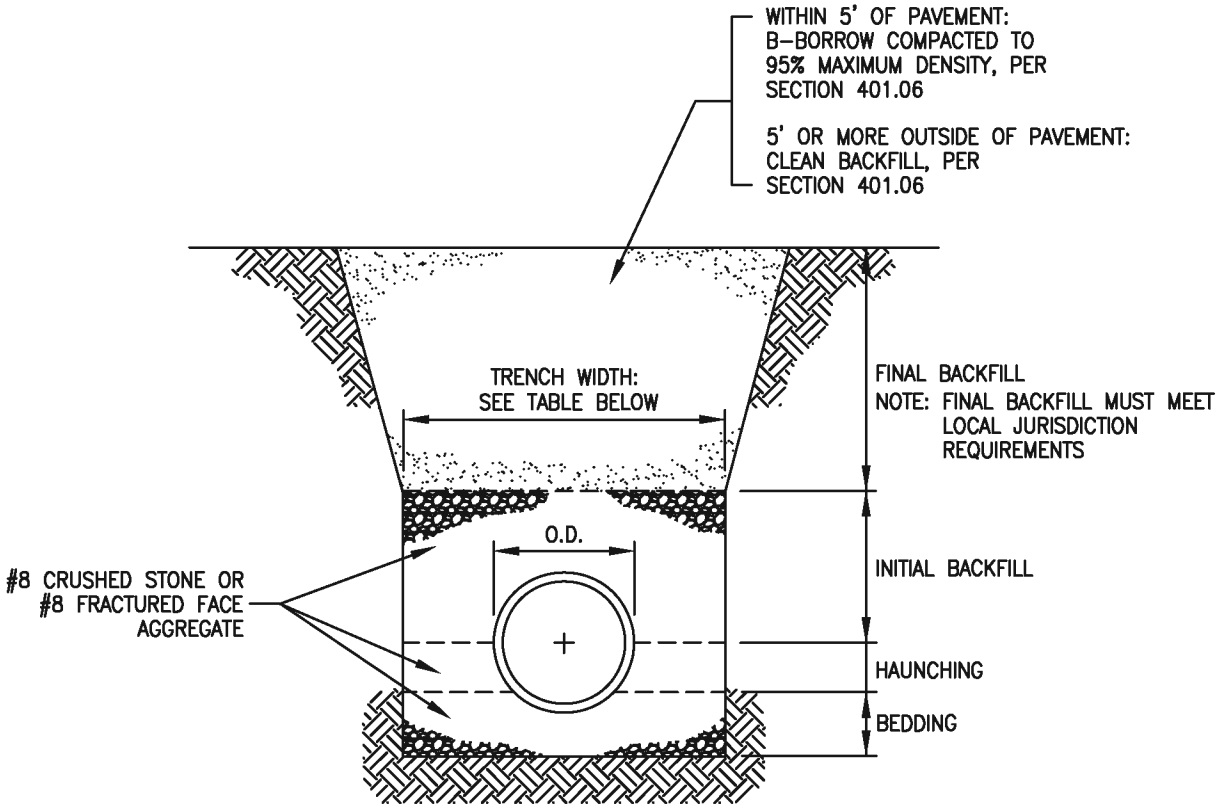

MINIMUM BEDDING, HAUNCHING, AND INITIAL BACKFILL DEPTHS		
PIPE SIZE	BEDDING (BELOW PIPE BARREL)	HAUNCHING AND INITIAL BACKFILL (ABOVE TOP OF PIPE)
UNDER 8"	4" MIN.	4" MIN.
8" TO 15"	4" MIN.	12" MIN.
18" & OVER	8" MIN.	12" MIN.

MINIMUM TRENCH WIDTHS	
PIPE SIZE	MINIMUM WIDTH
UP TO 18"	O.D. + 16"
18" & OVER	(O.D. x 1.25) + 12"

NOT TO SCALE

CITIZENS ENERGY GROUP

FLEXIBLE PIPE BEDDING & BACKFILL REQUIREMENTS

FIGURE 400.01

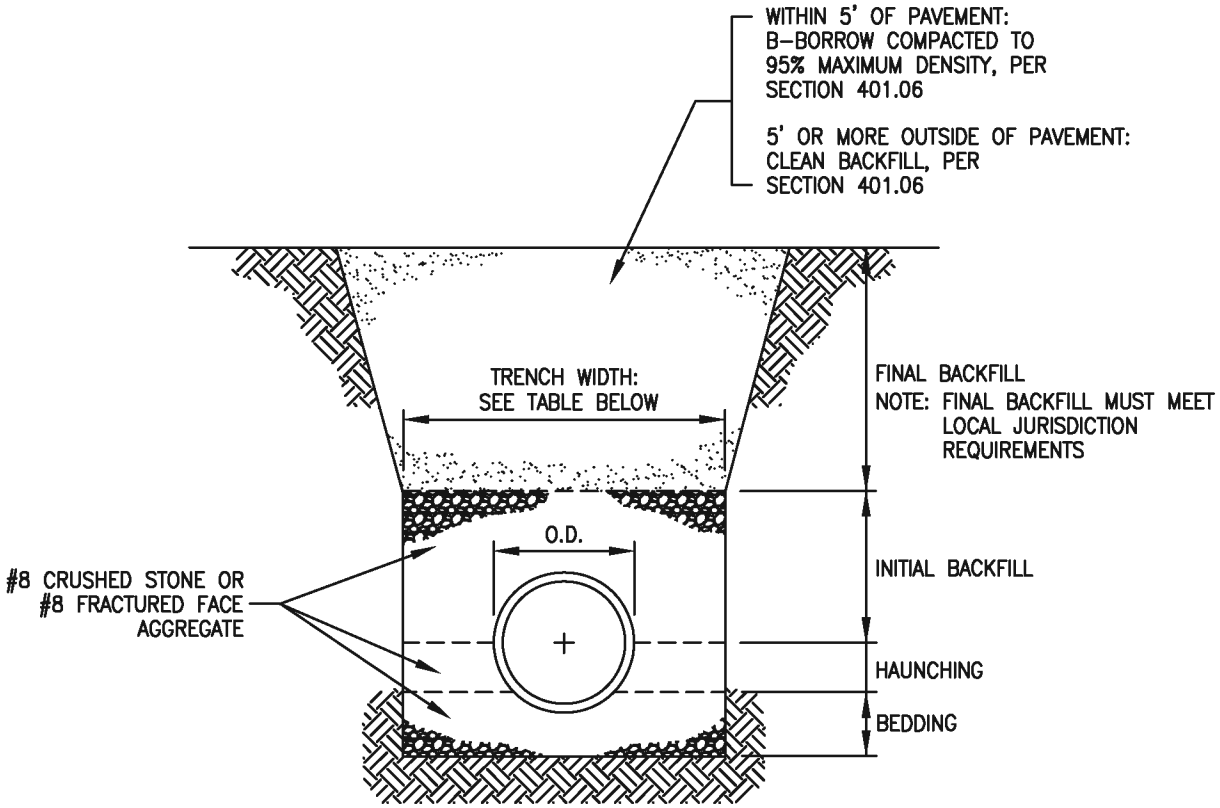

MINIMUM BEDDING, HAUNCHING, AND INITIAL BACKFILL DEPTHS		
PIPE SIZE	BEDDING (BELOW PIPE BARREL)	HAUNCHING AND INITIAL BACKFILL (ABOVE TOP OF PIPE)
8" TO 15"	4" MIN.	6" MIN.
18" & OVER	8" MIN.	6" MIN.

MINIMUM TRENCH WIDTHS	
PIPE SIZE	MINIMUM WIDTH
UP TO 18"	O.D. + 16"
18" & OVER	(O.D. x 1.25) + 12"

NOT TO SCALE

CITIZENS ENERGY GROUP

SEMI-RIGID PIPE BEDDING AND BACKFILL REQUIREMENTS

FIGURE 400.02

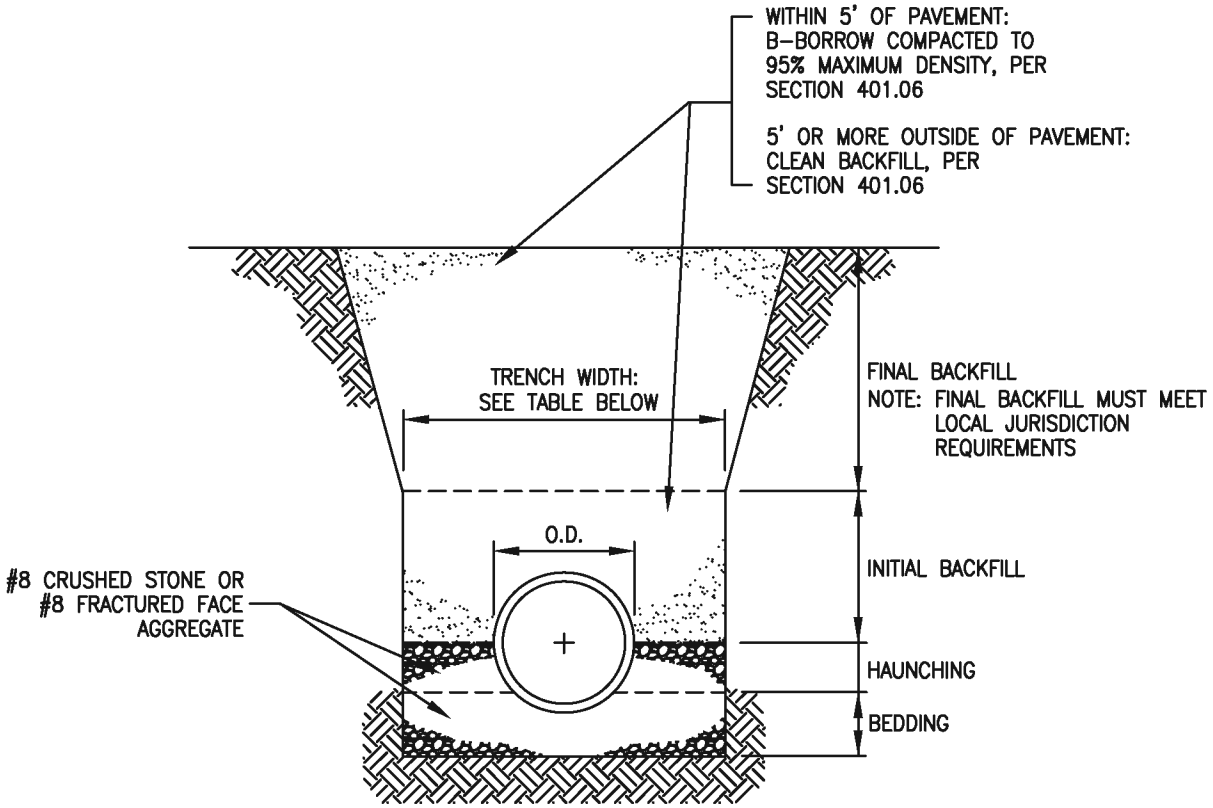

MINIMUM BEDDING, HAUNCHING, AND INITIAL BACKFILL DEPTHS		
PIPE SIZE	BEDDING (BELOW PIPE BARREL)	HAUNCHING AND INITIAL BACKFILL (ABOVE TOP OF PIPE)
24" & GREATER	8" MIN.	1/2 OD. MIN.

MINIMUM TRENCH WIDTHS	
PIPE SIZE	MINIMUM WIDTH
24" AND GREATER	(O.D. X 1.25) + 12"

NOT TO SCALE

CITIZENS ENERGY GROUP

RIGID PIPE BEDDING & BACKFILL REQUIREMENTS

FIGURE 400.03

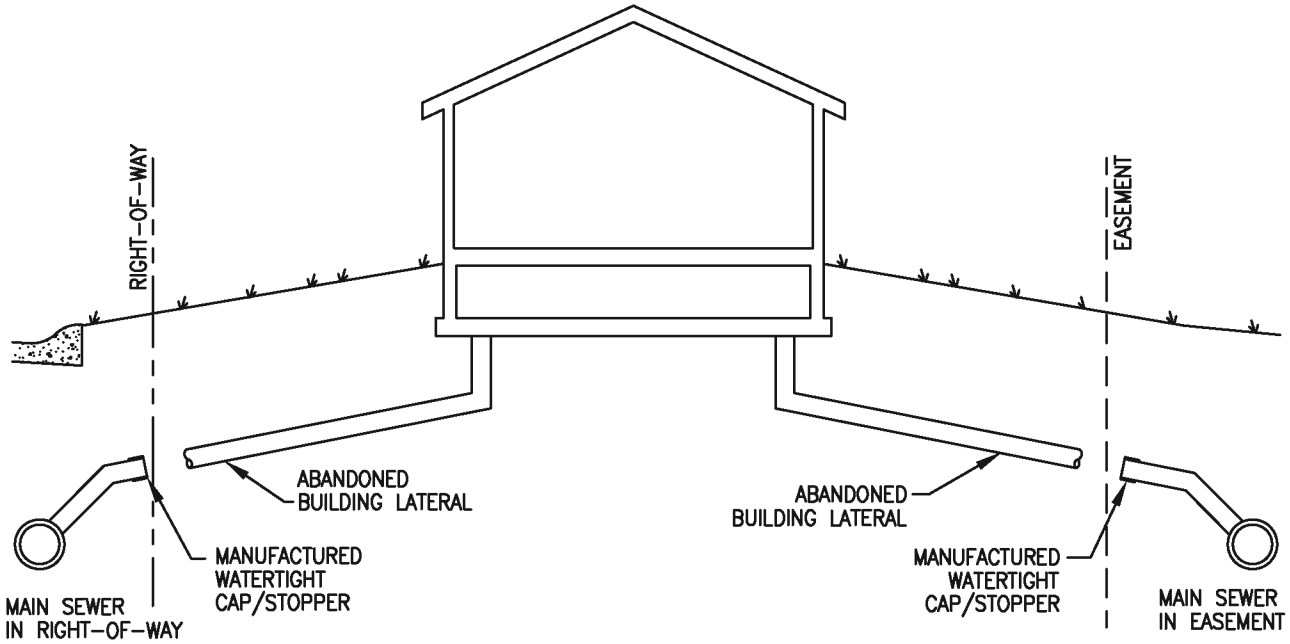

INDIVIDUAL LATERAL CAP LOCATION
CROSS-SECTION VIEW

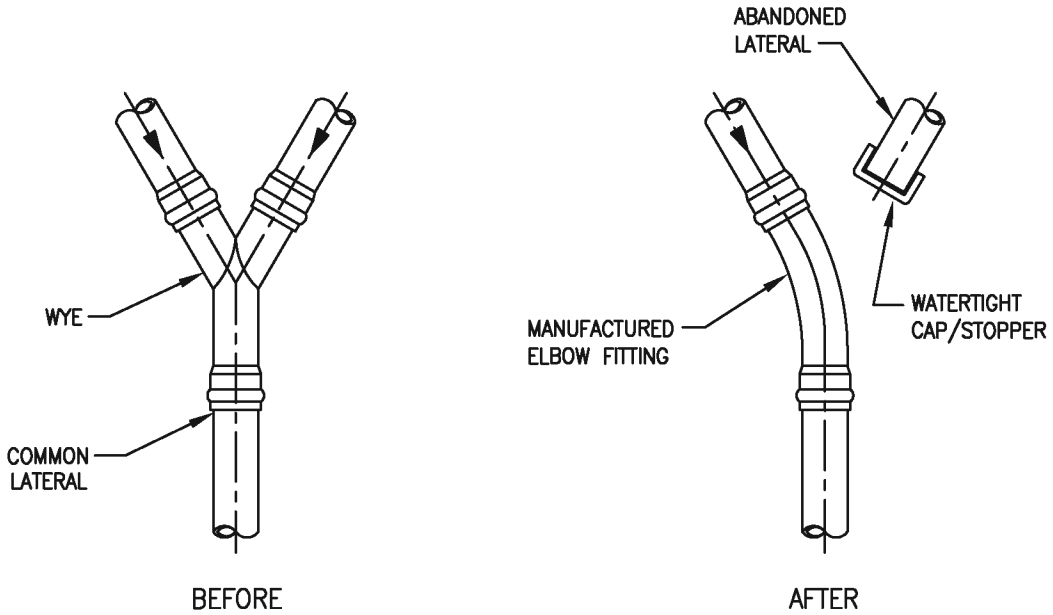

SHARED LATERAL CAP LOCATION
PLAN VIEW DETAIL

NOT TO SCALE

CITIZENS ENERGY GROUP

ACCEPTED METHODS OF CAPPING AN ABANDONED SEWER LATERAL

FIGURE 400.04

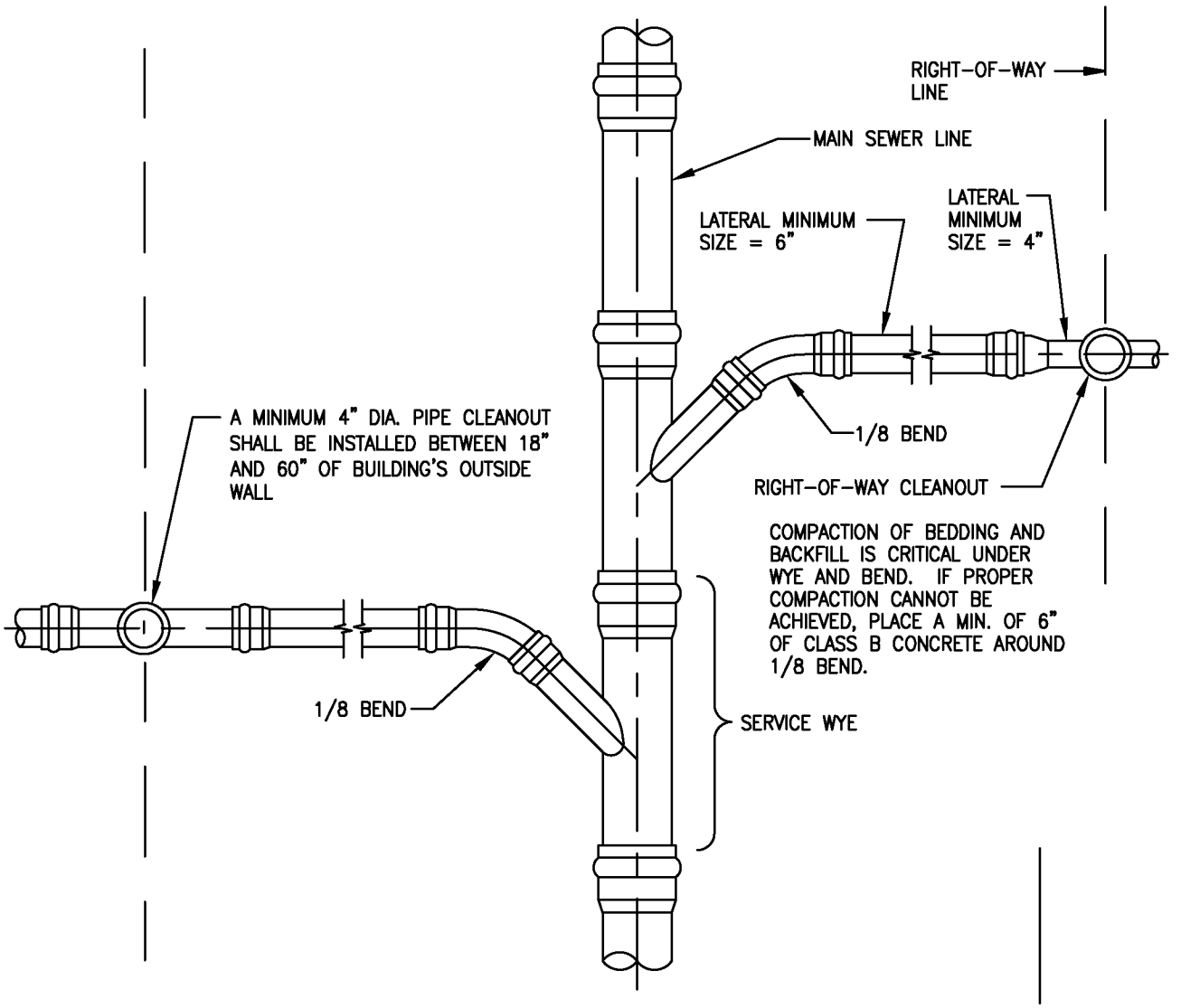

PLAN VIEW

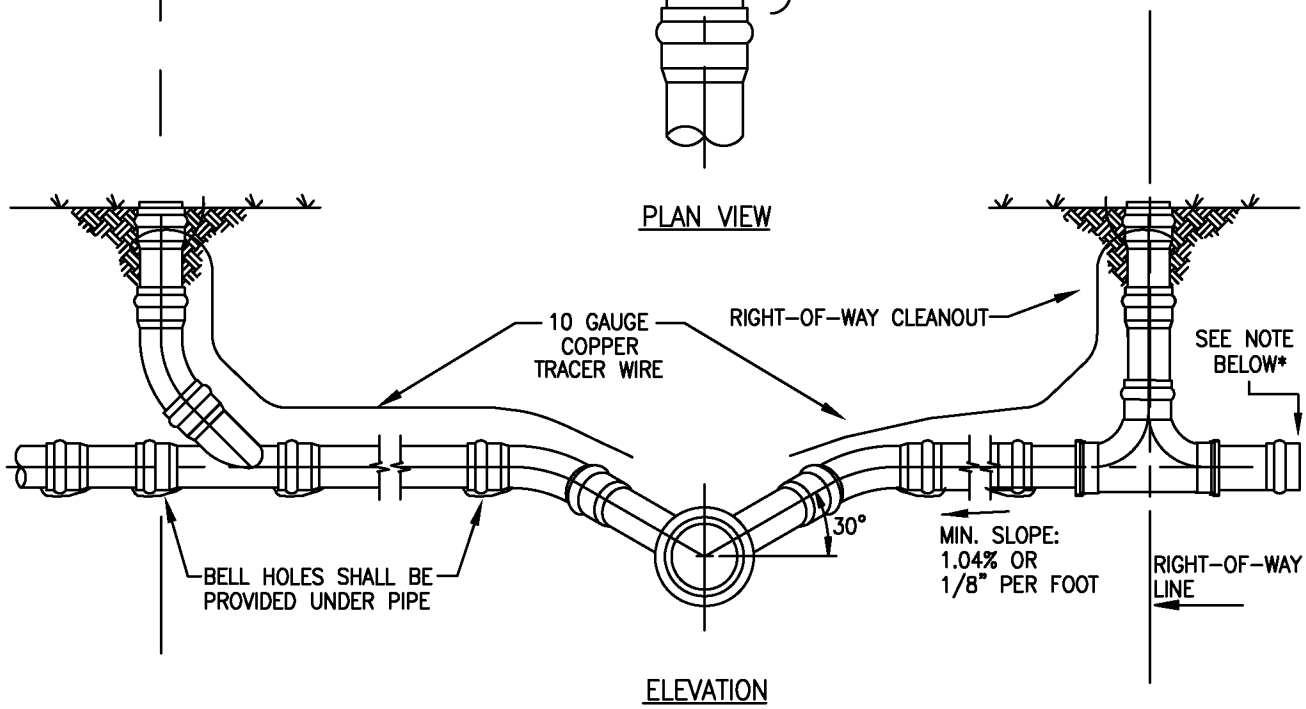

ELEVATION

*NOTE:
CONNECT TO EXISTING SERVICE OR SEAL WITH WATERTIGHT PLUG FOR FUTURE CONNECTION.

NOT TO SCALE

CITIZENS ENERGY GROUP

SERVICE CONNECTION FOR SHALLOW SEWERS (Less than 15' deep)

FIGURE 400.05

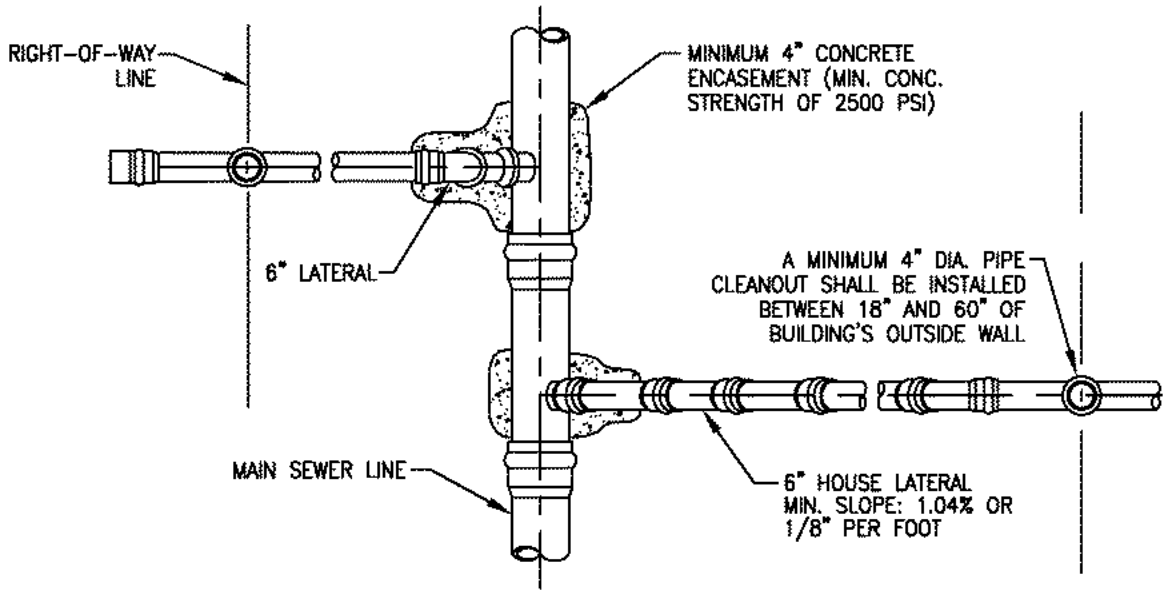

PLAN

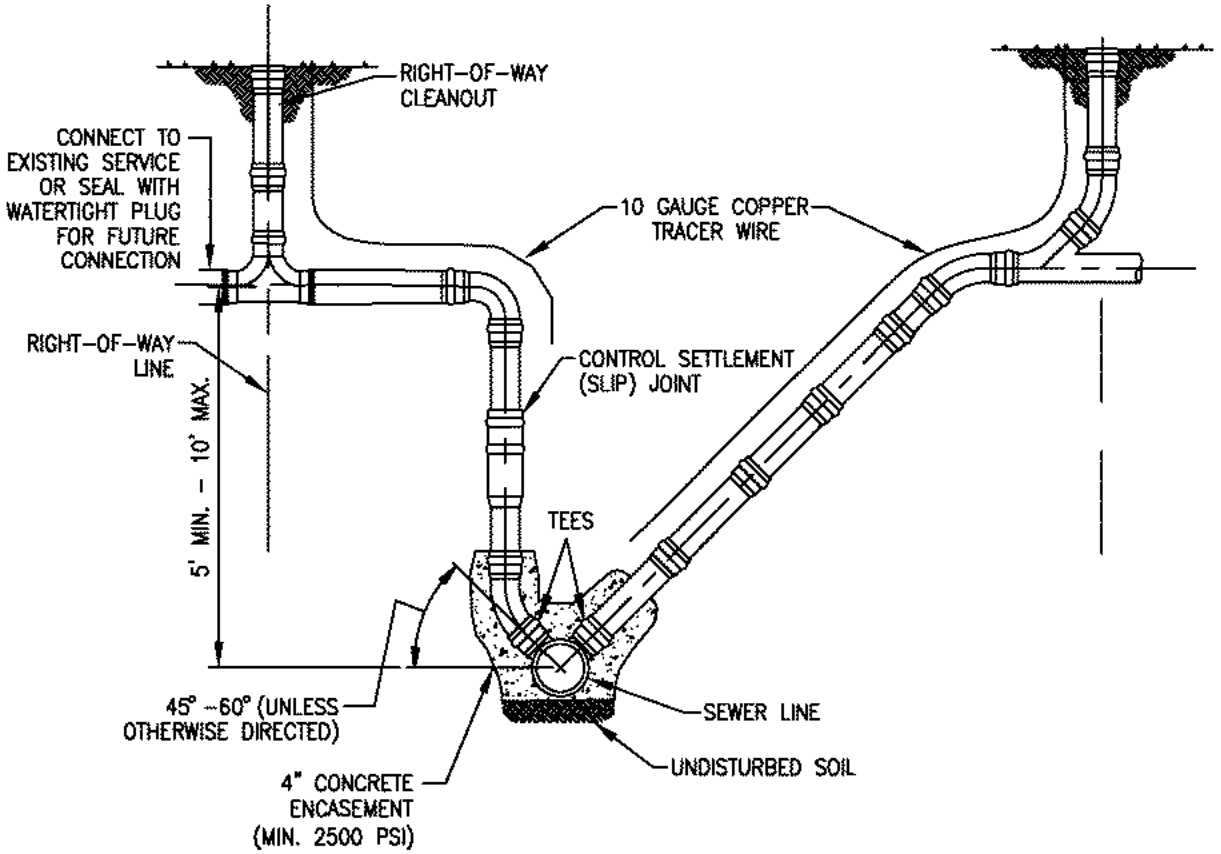

ELEVATION

NOT TO SCALE

CITIZENS ENERGY GROUP

SERVICE CONNECTION FOR DEEP SEWERS (15' deep and over)

FIGURE 400.06

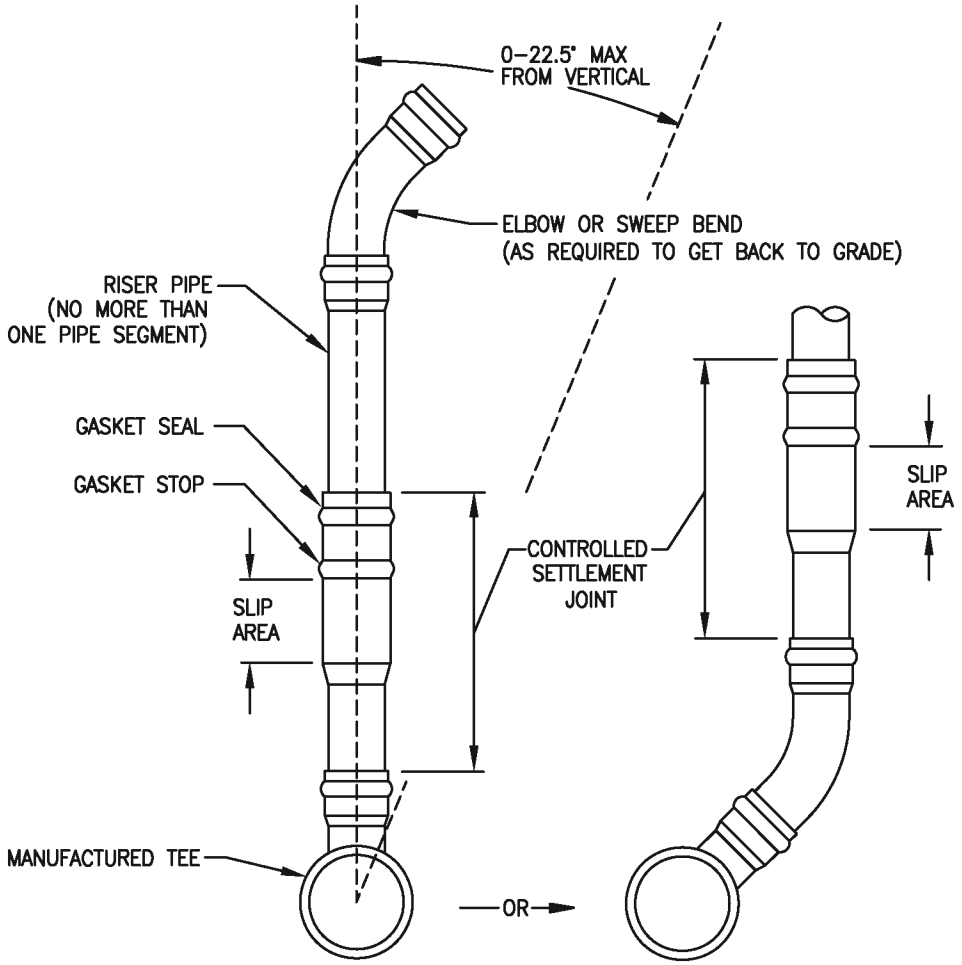

NOT TO SCALE

CITIZENS ENERGY GROUP

CONTROLLED SETTLEMENT JOINT INSTALLATION

FIGURE 400.07

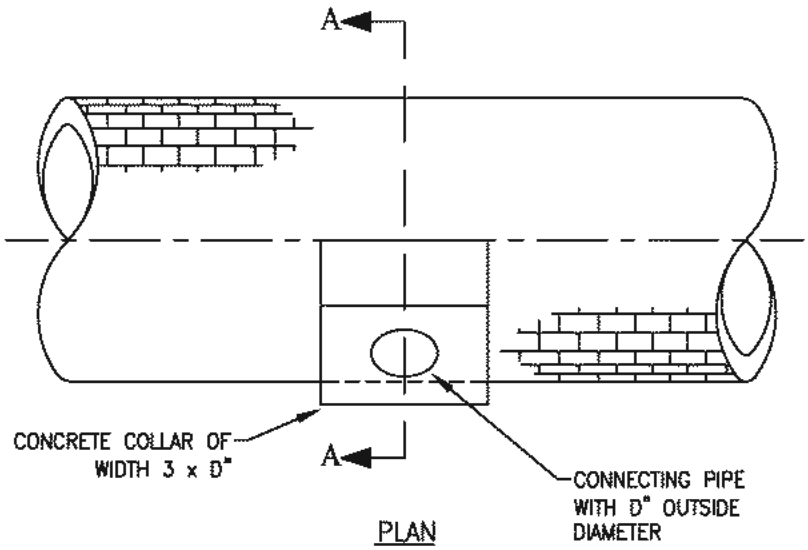

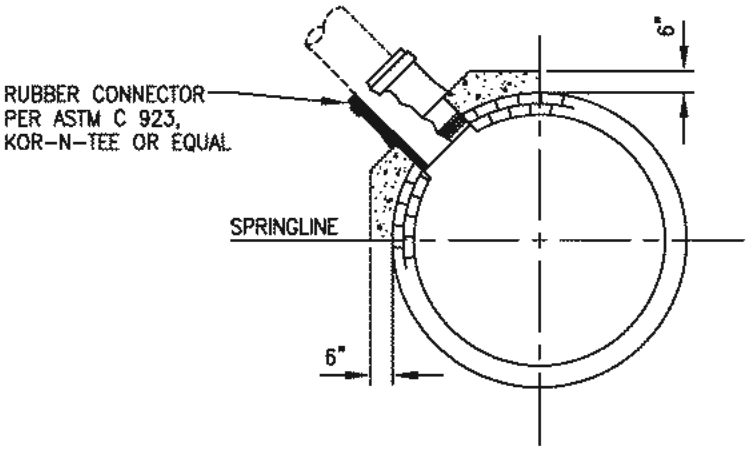

NOTE:
CORE DRILL HOLE FOR LATERAL CONNECTION AFTER CONCRETE COLLAR IS POURED

SECTION "A-A"

NOT TO SCALE

CITIZENS ENERGY GROUP

CONCRETE COLLAR DETAIL

FIGURE 400.08

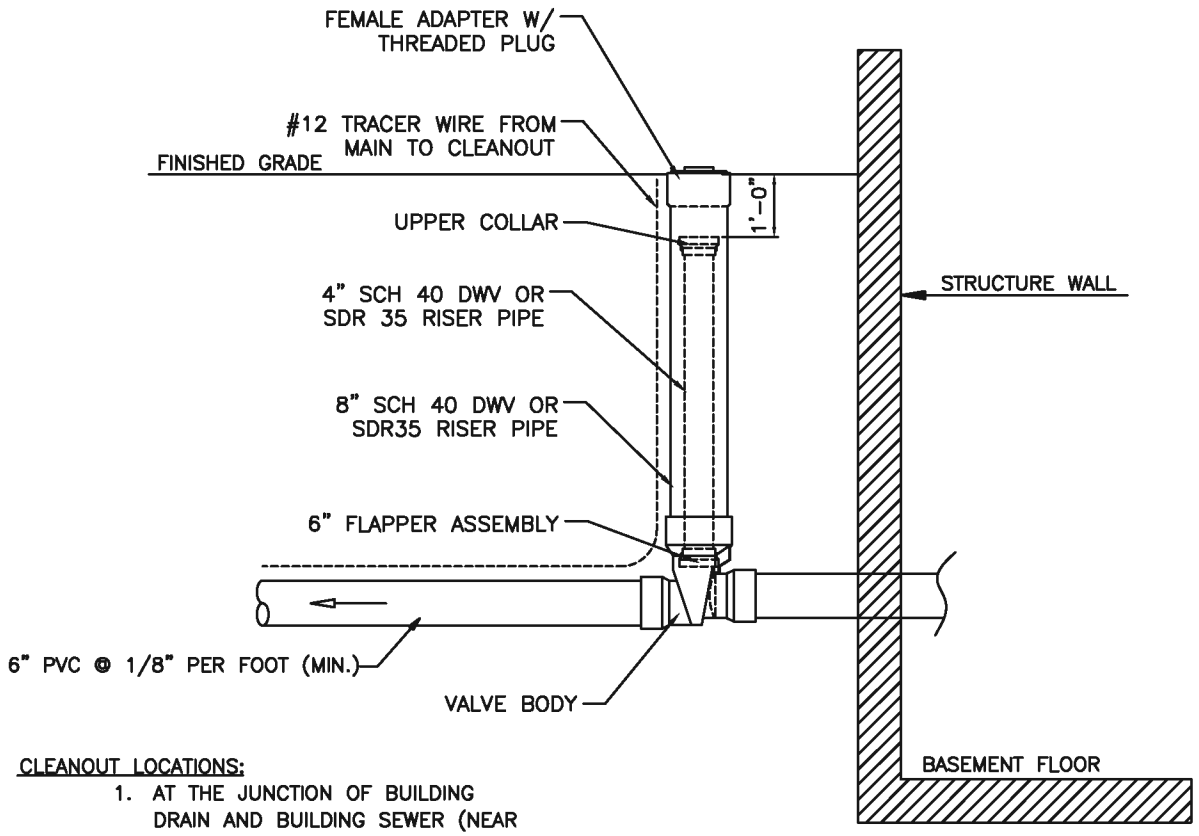

CLEANOUT LOCATIONS:

1. AT THE JUNCTION OF BUILDING DRAIN AND BUILDING SEWER (NEAR EXTERIOR FACE OF BUILDING)
2. IF BUILDING SEWER IS MORE THAN 100 FEET FROM MAIN LINE SEWER, CLEAN-OUTS SPACING SHALL NOT EXCEED 100 FEET.
3. A CLEANOUT IS REQUIRED AT EACH BEND THAT IS GREATER THAN 45 DEGREES.
4. THERE SHALL BE NO BASEMENT DRAINS CONNECTED TO SERVICE CONNECTION

CHECK VALVE REQUIREMENTS

1. ALL HOUSES ARE REQUIRED TO HAVE A CHECK VALVE (WESTFIELD ONLY)
2. NO CHECK VALVES ARE TO BE LOCATED IN THE BASEMENT
3. USE RECTORSEAL, CANPLAS OR APPROVED EQUAL

GENERAL REQUIREMENTS

1. THE LOWEST FLOOR ELEVATION RECEIVING GRAVITY SERVICE MUST BE A MIN.THREE (3.0) FEET ABOVE TOP NEAREST MANHOLE RIM.

NOT TO SCALE

CITIZENS ENERGY GROUP

HOUSE/BUILDING SERVICE CLEAN-OUT/CHECK VALVE DETAIL

FIGURE 400.09

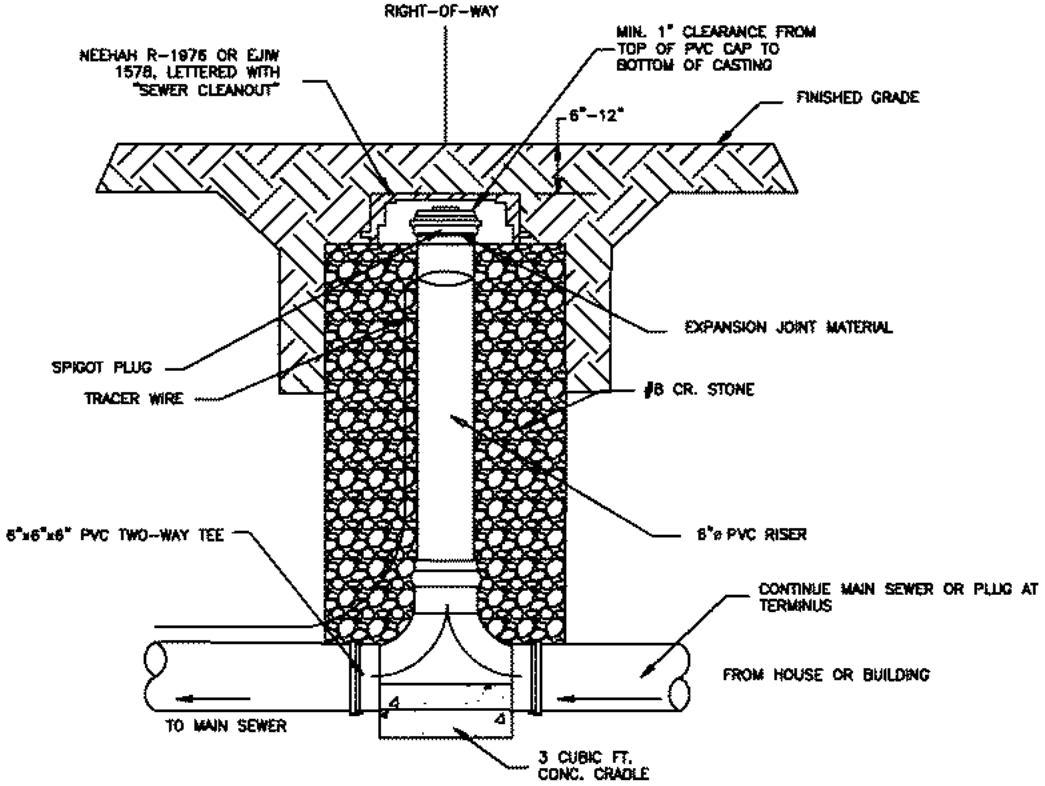

OUTSIDE PAVEMENT

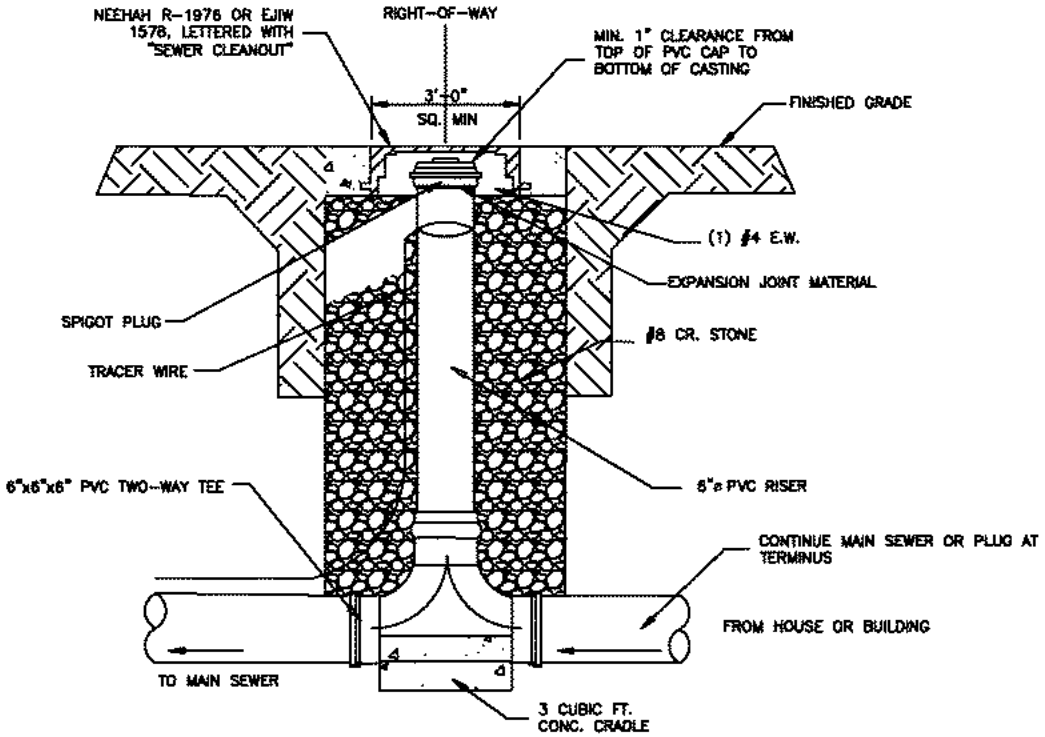

NOT TO SCALE

CITIZENS ENERGY GROUP

RIGHT-OF-WAY CLEAN-OUT DETAIL

FIGURE 400.10

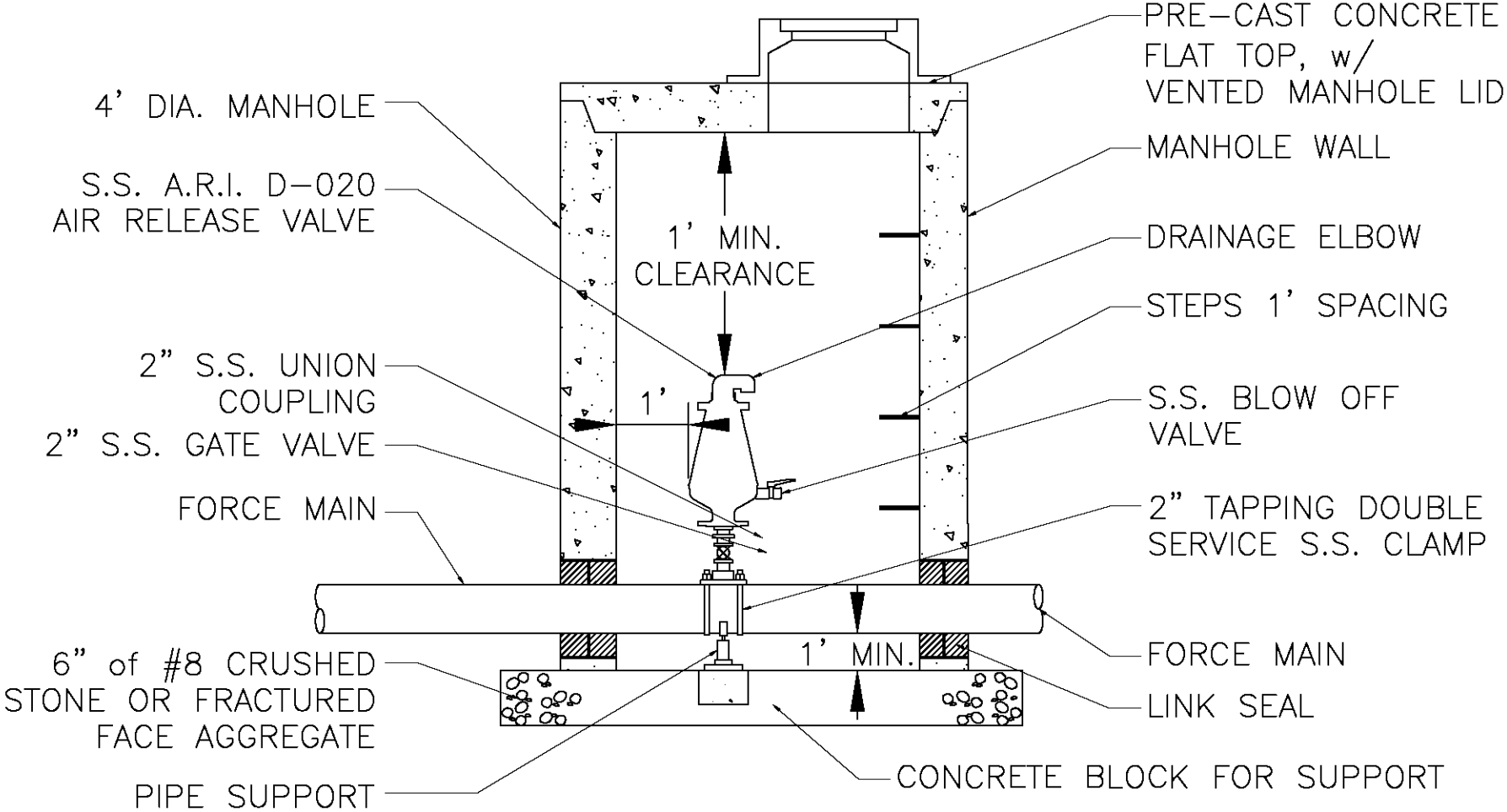

TYPICAL AIR RELEASE VALVE DETAIL

NOT TO SCALE

citizens energy group

CITIZENS ENERGY GROUP

LEVEL 2 SUBMERSIBLE LIFT STATION

STANDARD DETAILS

FIGURE NO.

400.11

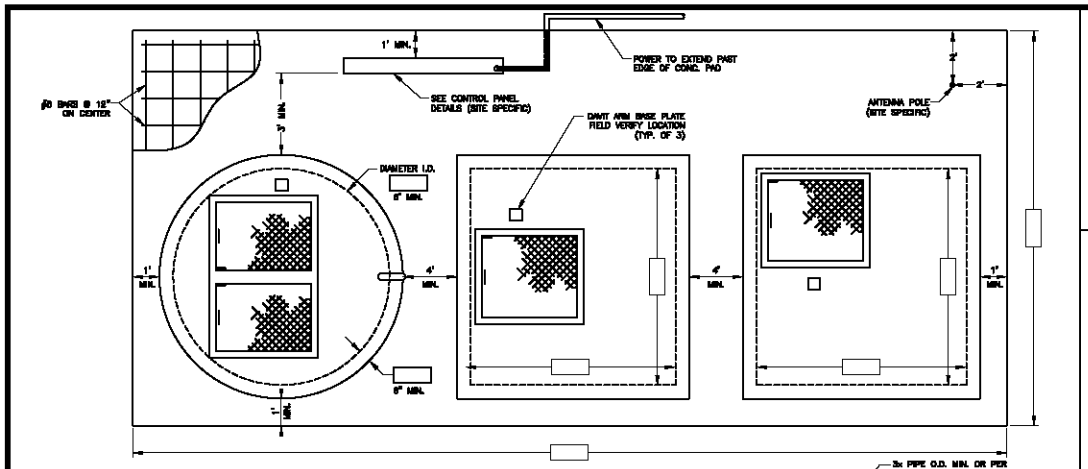

PLAN VIEW
NOT TO SCALE

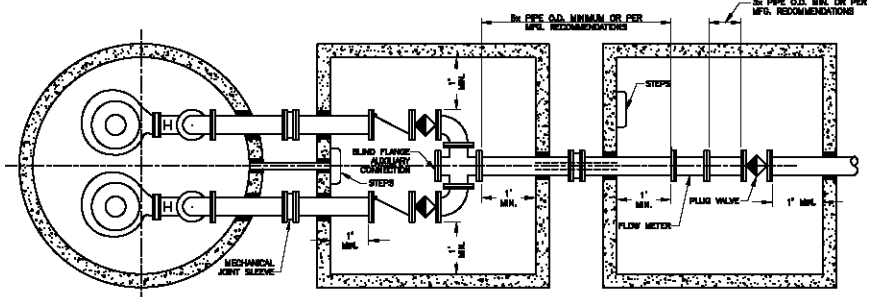

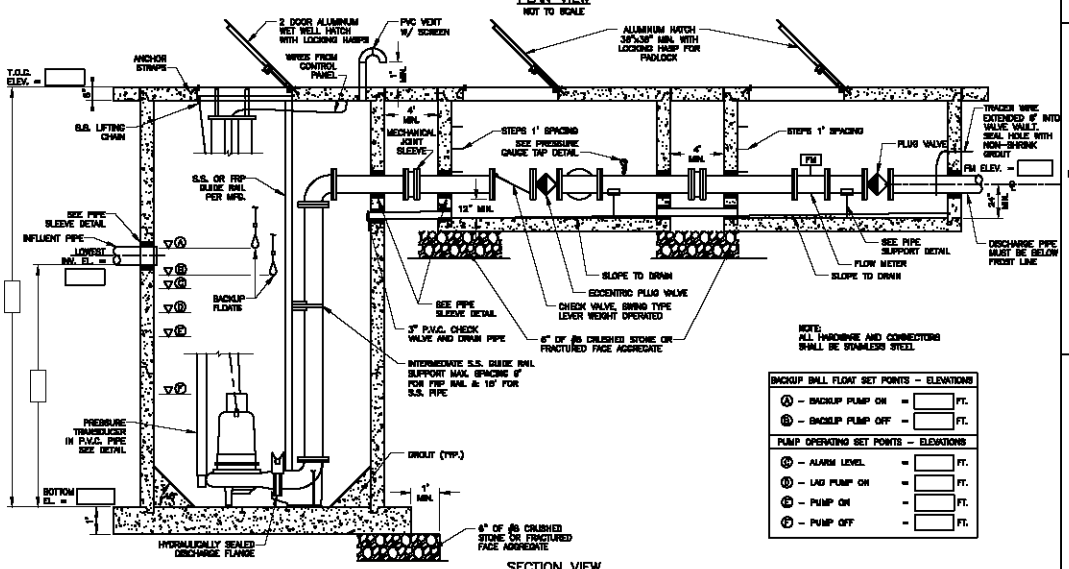

NOTE:
ALL HARDWARE AND CONNECTORS SHALL BE STAINLESS STEEL

BACKUP BALL FLOAT SET POINTS – ELEVATIONS		
Ⓐ – BACKUP PUMP ON	=	FT.
Ⓑ – BACKUP PUMP OFF	=	FT.
PUMP OPERATING SET POINTS – ELEVATIONS		
Ⓒ – ALARM LEVEL	=	FT.
Ⓓ – LAG PUMP ON	=	FT.
Ⓔ – PUMP ON	=	FT.
Ⓕ – PUMP OFF	=	FT.

SECTION VIEW
NOT TO SCALE

INFORMATION

COUNTY: _____ TOWNSHIP: _____
SECTION: _____ TWP: _____ RANGE: _____
PROJECT: _____
LOCATION: _____

STATION PIPE SIZE, INCHES: _____ FORCE MAIN TYPE: _____
FORCE MAIN SIZE, INCHES: _____ LIFT STATION I.D.: _____
FORCE MAIN LENGTH, FEET: _____

PUMP DATA

	INITIAL	ULTIMATE
DISCHARGE SIZE:		
GPM:		
TDH:		
HP:		
RPM:		
VOLTAGE:		
PHASE:		
MANUFACTURER:		
MODEL:		
IMPELLER SIZE:		

SITE PLAN
NOT TO SCALE

SERVICE AREA
NOT TO SCALE

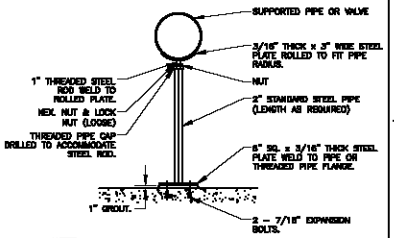

NOTES:
1. PIPE SUPPORTS SHALL BE SPACED NOT MORE THAN 16'-0" ON CENTER. PIPE TO BE SUPPORTED NEAR EACH SIDE OF VALVES, FLOW METERS, AND COUPLINGS.

ADJUSTABLE PIPE SUPPORT DETAIL
NOT TO SCALE

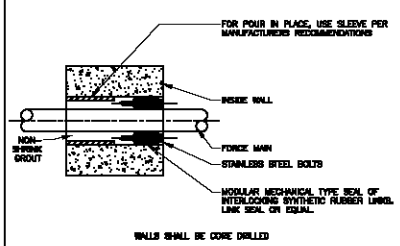

PIPE SLEEVE DETAIL
FOR ALL WALL PENETRATIONS
NOT TO SCALE

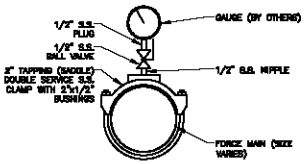

PRESSURE GAUGE TAP DETAIL (TYP.)
NOT TO SCALE

citizens energy group

Revision Number	Revision Description	Drawn By	Checked By	Date

Filename
Project No.
Project Date

CITIZENS ENERGY GROUP
LEVEL 2 SUBMERSIBLE LIFT STATION
STANDARD DETAILS

FIGURE NO.
500.01

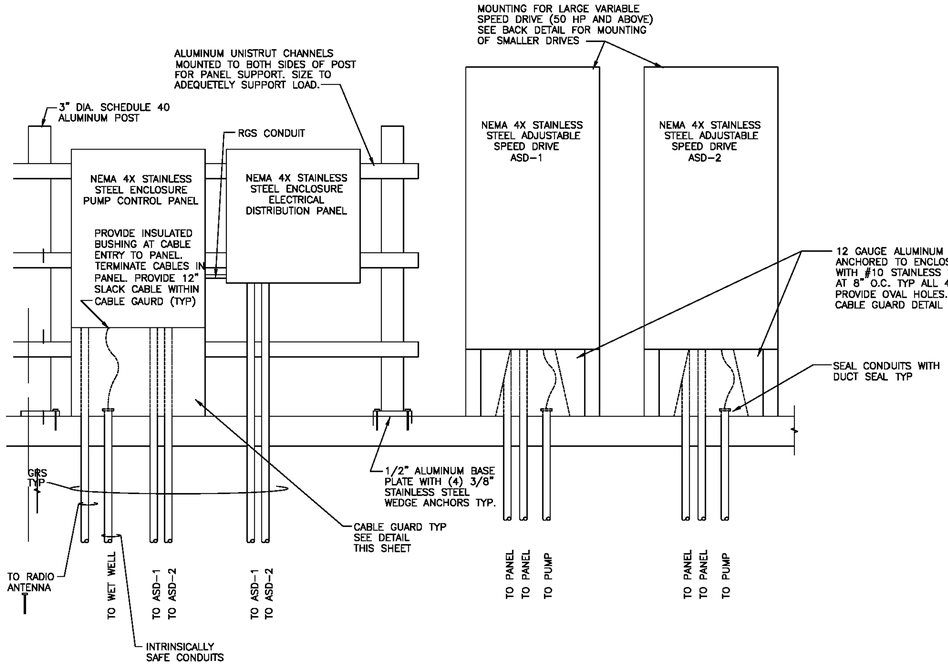

EQUIPMENT MOUNTING DETAIL (FRONT)

NTS

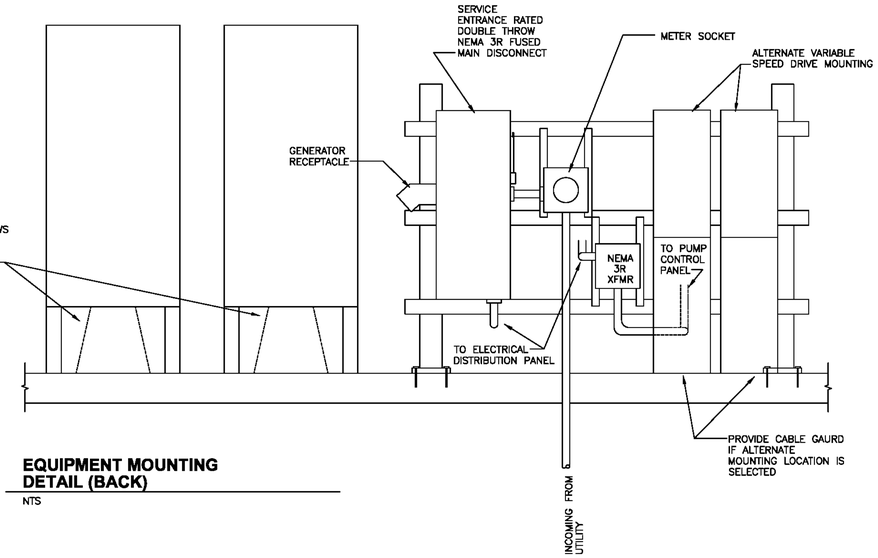

EQUIPMENT MOUNTING DETAIL (BACK)

NTS

CABLE GUARD DETAIL

NTS

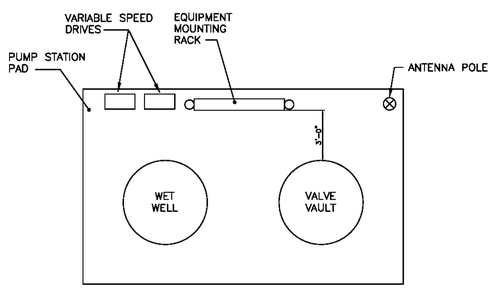

TYPICAL PLAN VIEW

NTS

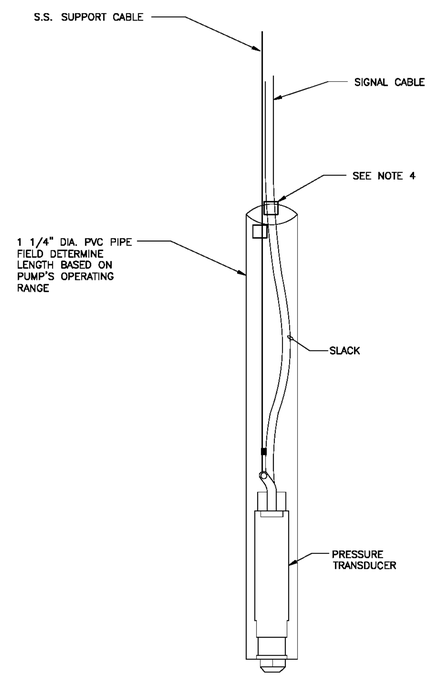

PRESSURE TRANSDUCER DETAIL

NTS

NOTES:

1. SECURE GUARD TO EQUIPMENT ENCLOSURE WITH 1/4" S.S. BOLTS AND TO CONCRETE WITH 1/4" S.S. WEDGE ANCHORS.
2. PROVIDE VENT ON EACH SIDE.
3. FIELD DETERMINE GUARD DIMENSIONS BASED ON EQUIPMENT PANEL SIZE AND LOCATION.
4. CONSTRUCT GUARD WITH NON-FERROUS MATERIAL SUCH AS FIBERGLASS COMPOSITE, STAINLESS STEEL OR ALUMINUM BASED ON EQUIPMENT PANEL SIZE AND LOCATION.

BEFORE INSTALLATION

1. DO NOT DISASSEMBLE THE TRANSDUCER OR LOOSEN THE COMPRESSION NUT AT THE SIGNAL CABLE ENTRY. THIS WILL VOID WARRANTY.

2. DO NOT NICK OR CUT THE SIGNAL CABLE JACKET TO PREVENT LEAKAGE THAT WILL VOID WARRANTY. AVOID ROLLING THE CABLE SPOOL OVER ROCKS, STONES, OR OTHER SHARP OBJECTS.

3. CONFIRM THE CONNECTION BETWEEN THE TRANSDUCER SIGNAL CABLE LEADS AND THE METER OR TRANSMITTER TERMINALS TO ENSURE PROPER OPERATION. REFER TO OPERATOR'S MANUAL. IF NEEDED, DISCONNECT THE SIGNAL CABLE LEADS FROM THE METER OR TRANSMITTER BEFORE INSTALLATION. DO NOT CONNECT THE SIGNAL CABLE LEADS TO ANY OTHER POWER SOURCE.

INSTALLATION

4. DRILL HOLE NEAR TOP OF PVC PIPE (TYP. 2). LOOSELY SECURE THE FREE ENDS OF THE SIGNAL CABLE AND SUPPORT CABLE, IF APPLICABLE, WITH ZIP TIES BEFORE LOWERING INTO THE WET WELL. PROPER INSTALLATION WILL ALLOW RETRIEVAL OF TRANSDUCER FOR MAINTENANCE.

5. HANDLE THE SIGNAL CABLE AND TRANSDUCER WITH CARE DURING INSTALLATION.

6. FOR DEPTHS OVER 300 FEET, USE A SUPPORT CABLE TO CARRY THE WEIGHT OF THE TRANSDUCER. PROVIDE SLACK IN THE SIGNAL CABLE TO PREVENT THE TRANSDUCER'S WEIGHT FROM PULLING ON THE SIGNAL CABLE (SEE DETAIL. ALSO REFER TO THE OPERATOR'S MANUAL).

7. DO NOT ROUTE THE SIGNAL CABLE NEXT TO HIGH VOLTAGE POWER LINES.

8. PROVIDE MEANS TO REMOVE THE TRANSDUCER IF NEEDED IN THE FUTURE.

citizens energy group

Revision Number	Revision Description	Drawn By	Checked By	Date
Revision Date	10/31/2018			

CITIZENS ENERGY GROUP

LEVEL 2 SUBMERSIBLE LIFT STATION

ELECTRICAL DETAILS

FIGURE NO.

500.01

Citzens Energy Group
CLSXXX
Level 2 Standard
Lift Station Control Panel

PAGE	DESCRIPTION
01	TITLE PAGE / DRAWING LIST
02	ENCLOSURE
03	PANEL LAYOUT / BILL OF MATERIALS
04	CONTROL POWER
05	MICROLOGIX 1400 CONTROLLER I/O
06	RELAY OUTPUTS
07	DC DIGITAL INPUTS
08	ANALOG INPUTS
09	ANALOG INPUTS
10	ANALOG OUTPUTS
11	ELECTRICAL DISTRIBUTION PANEL
12	POWER WIRING

	LEVEL 2 STANDARD
TITLE	TITLE PAGE / DRAWING LIST
DRAWING	PAGE 1

CITIZENS ENERGY GROUP

LIFT STATION DETAILS SHEETS

FIGURE 500.01

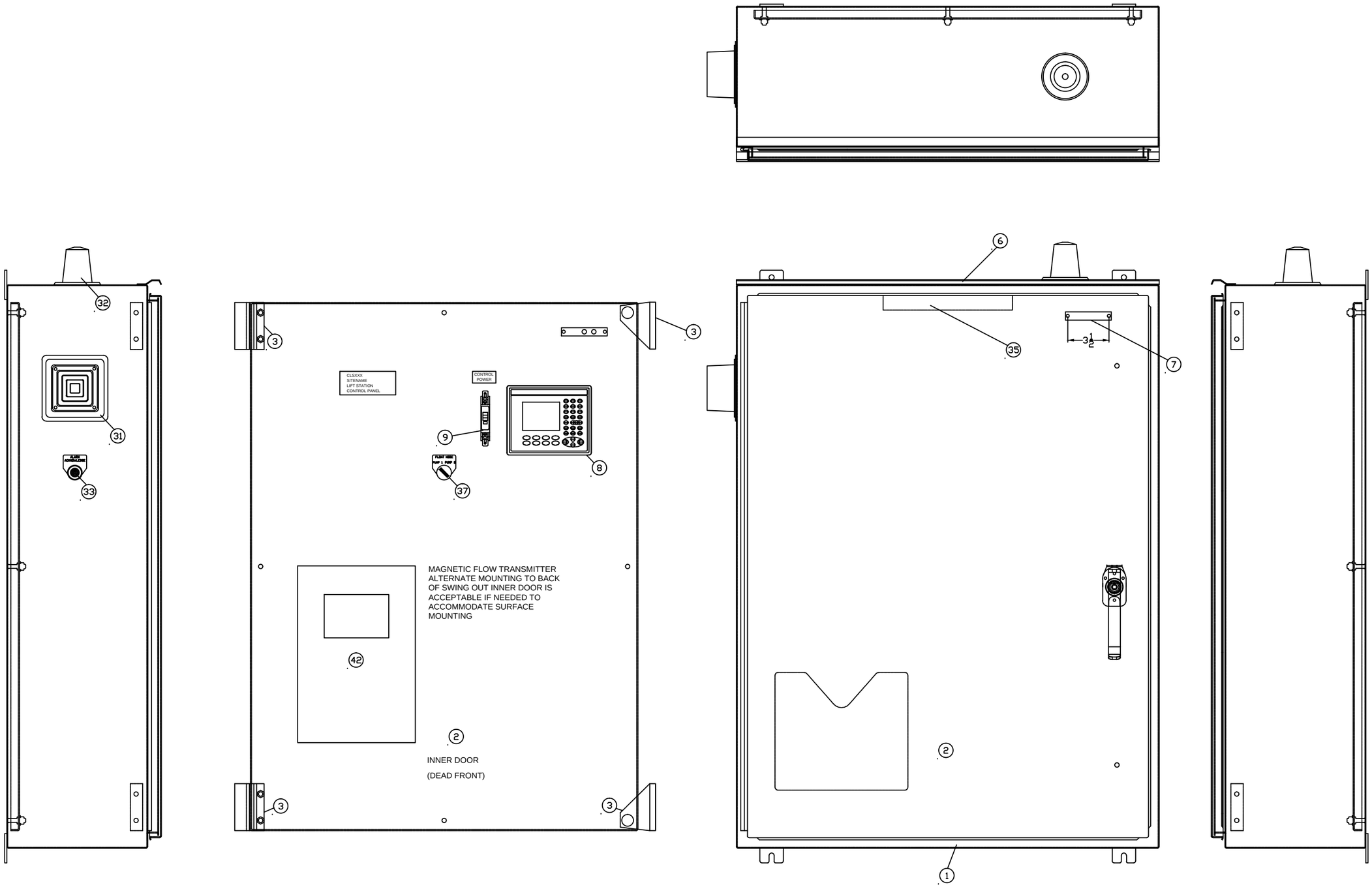

	LEVEL 2 STANDARD
TITLE:	CONTROL ENCLOSURE
DRAWING:	PAGE 2

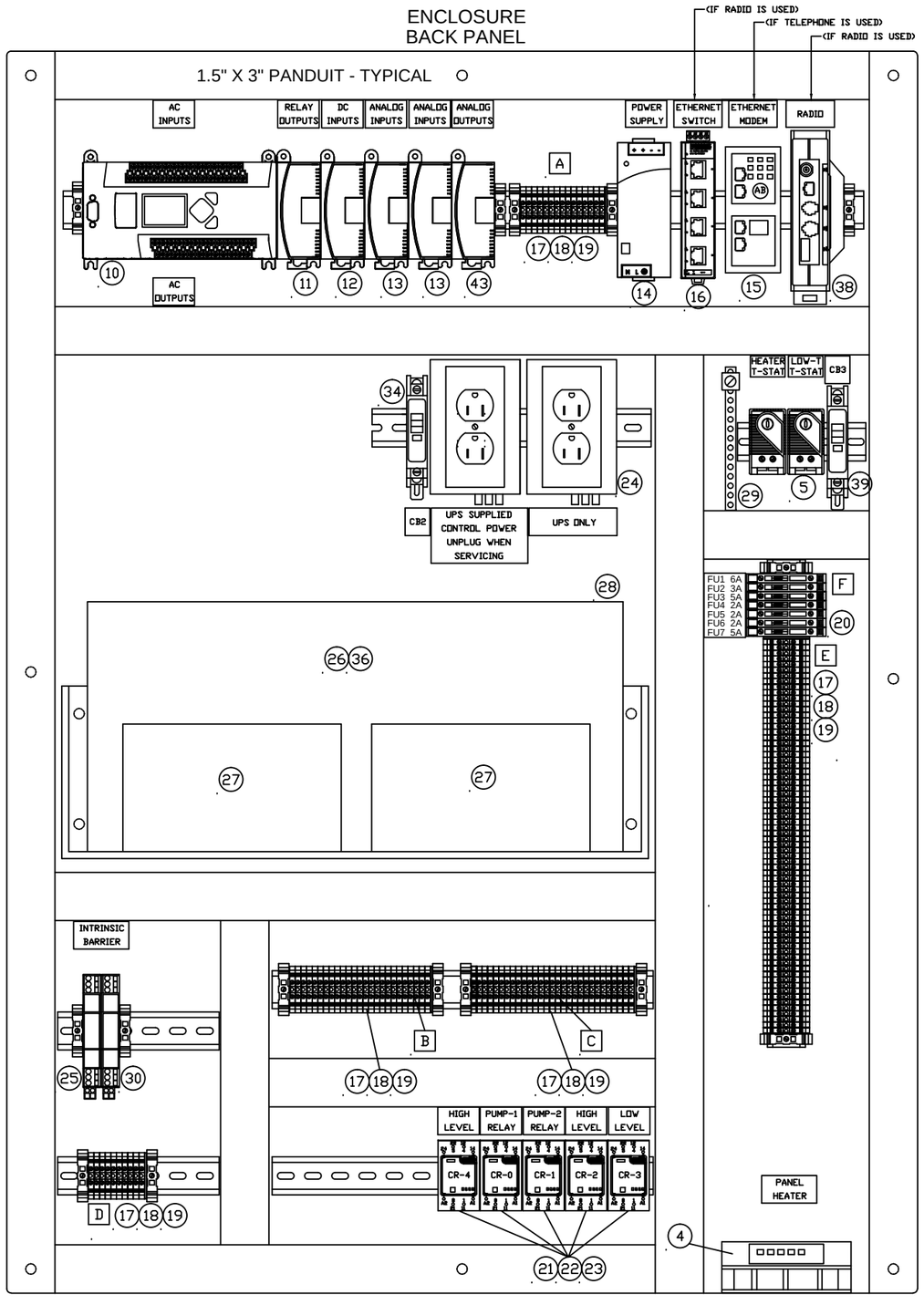

F	FU-1	6A
	FU-2	3A
	FU-3	5A
	FU-4	2A
	FU-5	2A
	FU-6	2A
	FU-7	2A

E

L1
1A
L2
2A
U1
1
1
1
1
2
2
2
2
2
6
8
100
101
102
103
I:0/0
I:0/1
I:0/2
I:0/3
I:0/4
I:0/5
I:0/6
I:0/7
I:0/8
I:0/9
I:0/10
I:0/11
I:0/12
I:0/13
I:0/14
I:0/15
I:0/16
I:0/17
I:0/18
I:0/19
O:0/0
O:0/1
O:0/2H
O:0/2
O:0/3H
O:0/3
O:0/4
O:0/5
O:0/6
O:0/7
O:0/8
O:0/9
O:0/10
O:0/11
O:0/12
O:1/0C
O:1/0NO
O:1/1C
O:1/1NO
O:1/2C
O:1/2NO
O:1/3C
O:1/3NO
O:1/4C
O:1/4NO
O:1/5C
O:1/5NO
-
-
-

70-TERMINALS

ITEM	QTY	DESCRIPTION	PART NO.	MANUFACTURER
1	1	SS ENCLOSURE	48"X36"X12"	-
2	2	BACK PANEL	-	-
3	1	DEAD FRONT KIT	-	-
4	1	HEATER	-	-
5	2	THERMOSTAT	-	-
6	1	DRIPSHIELD	-	-
7	1	DOOR SWITCH	-	-
8	1	OPERATOR INTERFACE	2711P-K4M20D	ALLEN BRADLEY
9	1	CIRCUIT BREAKER 20A	-	-
10	1	PLC PROCESSOR WITH DI 20 PT DO 12 PT	1766-L32AWA	ALLEN BRADLEY
11	1	RELAY OUTPUT 6 PT	1762-OX6I	ALLEN BRADLEY
12	1	DC DIGITAL INPUT 16 PT	1762-IQ16	ALLEN BRADLEY
13	2	ANALOG INPUT 4 PT	1762-IF4	ALLEN BRADLEY
14	1	24V DC POWER SUPPLY 2.5 AMP	-	-
15	1	ETHERNET MODEM	9300RADES	ALLEN BRADLEY
16	1	5 PORT ETHERNET SWITCH		
17	150	TERMINAL BLOCK	-	-
18	5	END COVER	-	-
19	14	END BLOCK	-	-
20	7	FUSE BLOCK	-	-
21	5	AC RELAY 3 POLE	-	-
22	5	RELAY BASE	-	-
23	5	RELAY CLIP	-	-
24	2	RECEPTACLE	-	-
25	1	ANALOG INTRINSIC BARRIER	-	-
26	1	UPS 650VA NOVUS FXM	017-219-21	ALPHA TECH
27	2	UPS BATTERY	181-025-10	ALPHA TECH
28	1	UPS RACK	-	-
29	1	GROUND BAR	-	-
30	1	DIGITAL INTRINSIC BARRIER DUAL	-	-
31	1	ALARM HORN WITH TRIM RING	-	-
32	1	ALARM LIGHT	-	-
33	1	PUSHBUTTON	-	-
34	1	CIRCUIT BREAKER 15A	-	-
35	1	FLOURESCENT LIGHT WITH SWITCH	-	-
36	1	BATTERY CABLE KIT	740-767-21	ALPHA TECH
37	1	2 POSITION SELECTOR SWITCH		
38	1	RADIO	ENTRANET	GE/MDS
39	1	GFI CIRCUIT BREAKER 15A		
40	1	PHONE LINE SURGE PROTECTOR	SP365A-R2	BLACK BOX
41	1	FILTERED MODEM PROTECTOR	ENTRANET	SANDMAN
42	1	MAGNETIC FLOW METER		
43	1	ANALOG OUTPUT 4 PT	1762-OF4	ALLEN BRADLEY

A

24VDC+
24VDC+
24VDC+
24VDC+
24VDC+
24VDC+
24VDC+
24VDCC
24VDCC
24VDCC
24VDCC
24VDCC
24VDCC
24VDCC

15-TERMINALS

C

I3.0+
I3.0-
SHD
I3.1+
I3.1-
I3.2+
I3.2-
SHD
I3.3+
I3.3-
I4/0+
I4/0-
SHD
I4/1+
I4/1-
I4/2+
I4/2-
SHD
I4/3+
I4/3-
O5/0+
O5/0-
SHD
O5/1+
O5/1-
O5/2+
O5/2-
SHD
O5/3+
O5/3-

30-TERMINALS

B

I:2/0
I:2/1
I:2/2
I:2/3
I:2/4
I:2/5
I:2/6
I:2/7
I:2/8
I:2/9
I:2/10
I:2/11
I:2/12
I:2/13
I:2/14
I:2/15
-
-
-
-
-
-
-
-
-

25-TERMINALS

D

AT1+
AT1-
-
-
201
202
203
204
-
-

10-TERMINALS

	LEVEL 2 STANDARD
TITLE:	CONTROL PANEL LAYOUT/BILL OF MATERIALS
DRAWING:	PAGE 3

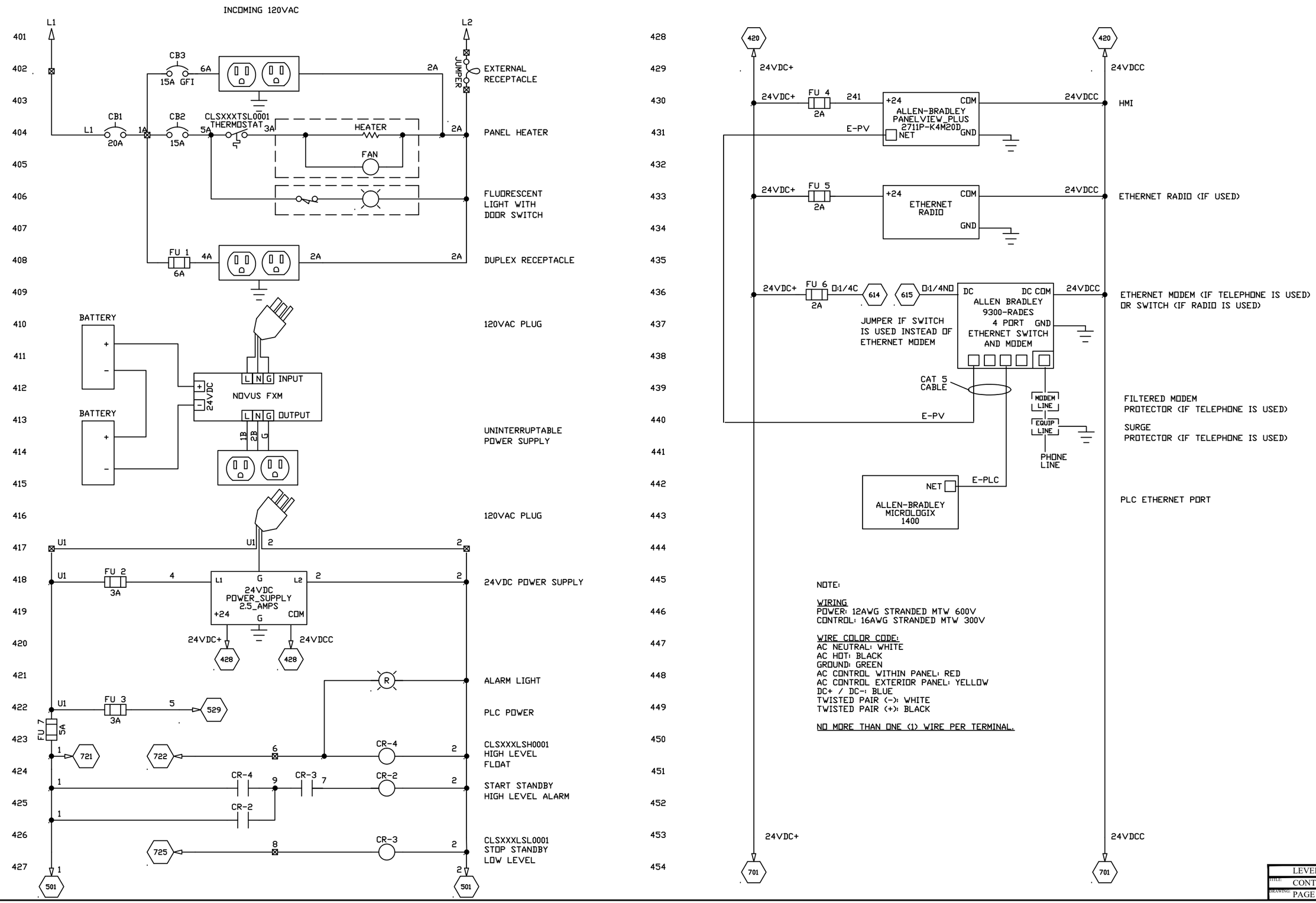

NOTE:

WIRING
POWER: 12AWG STRANDED MTW 600V
CONTROL: 16AWG STRANDED MTW 300V

WIRE COLOR CODE:
AC NEUTRAL: WHITE
AC HOT: BLACK
GROUND: GREEN
AC CONTROL WITHIN PANEL: RED
AC CONTROL EXTERIOR PANEL: YELLOW
DC+ / DC-: BLUE
TWISTED PAIR (-): WHITE
TWISTED PAIR (+): BLACK

NO MORE THAN ONE (1) WIRE PER TERMINAL.

	LEVEL 2 STANDARD
TITLE:	CONTROL POWER DIAGRAM
DRAWING:	PAGE 4

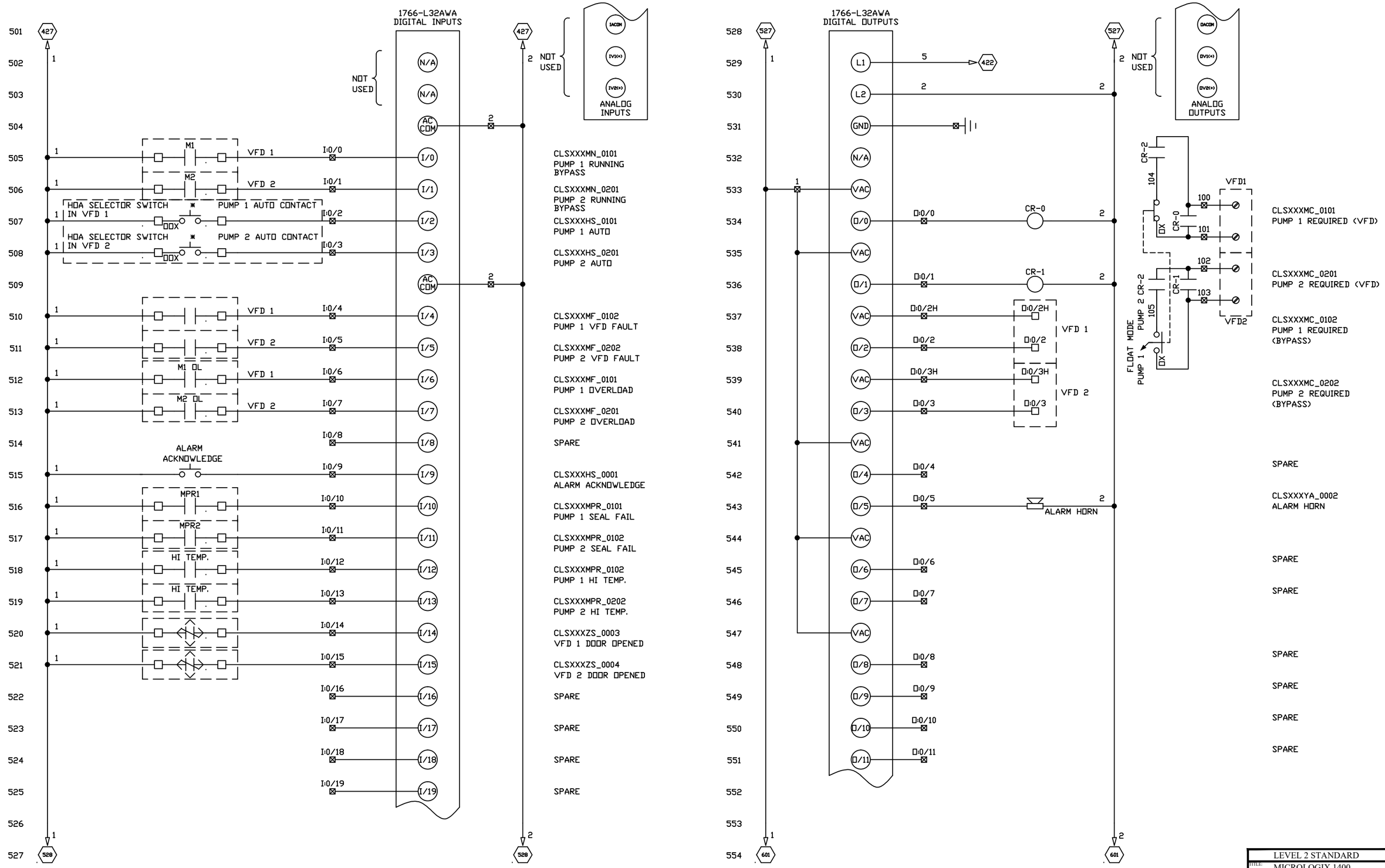

	LEVEL 2 STANDARD
TITLE:	MICROLOGIX 1400
DRAWING:	PAGE 5

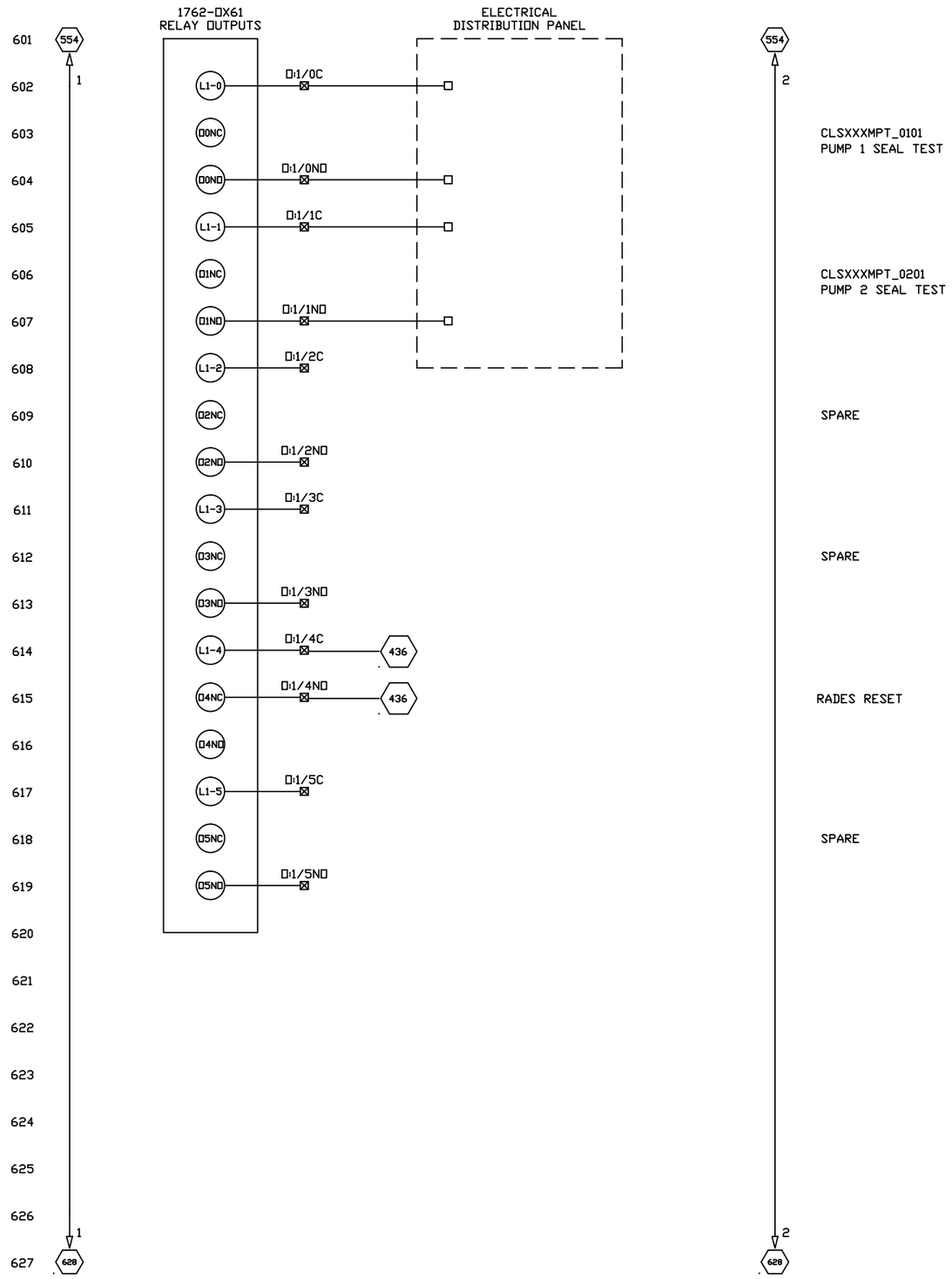

CLSXXXMPT_0101
PUMP 1 SEAL TEST

CLSXXXMPT_0201
PUMP 2 SEAL TEST

SPARE

SPARE

RADES RESET (NOT USED IF ETHERNET SWITCH AND RADIO USED INSTEAD OF ETHERNET MODEM)

SPARE

	LEVEL 2 STANDARD
TITLE:	RELAY OUTPUTS
DRAWING:	PAGE 6

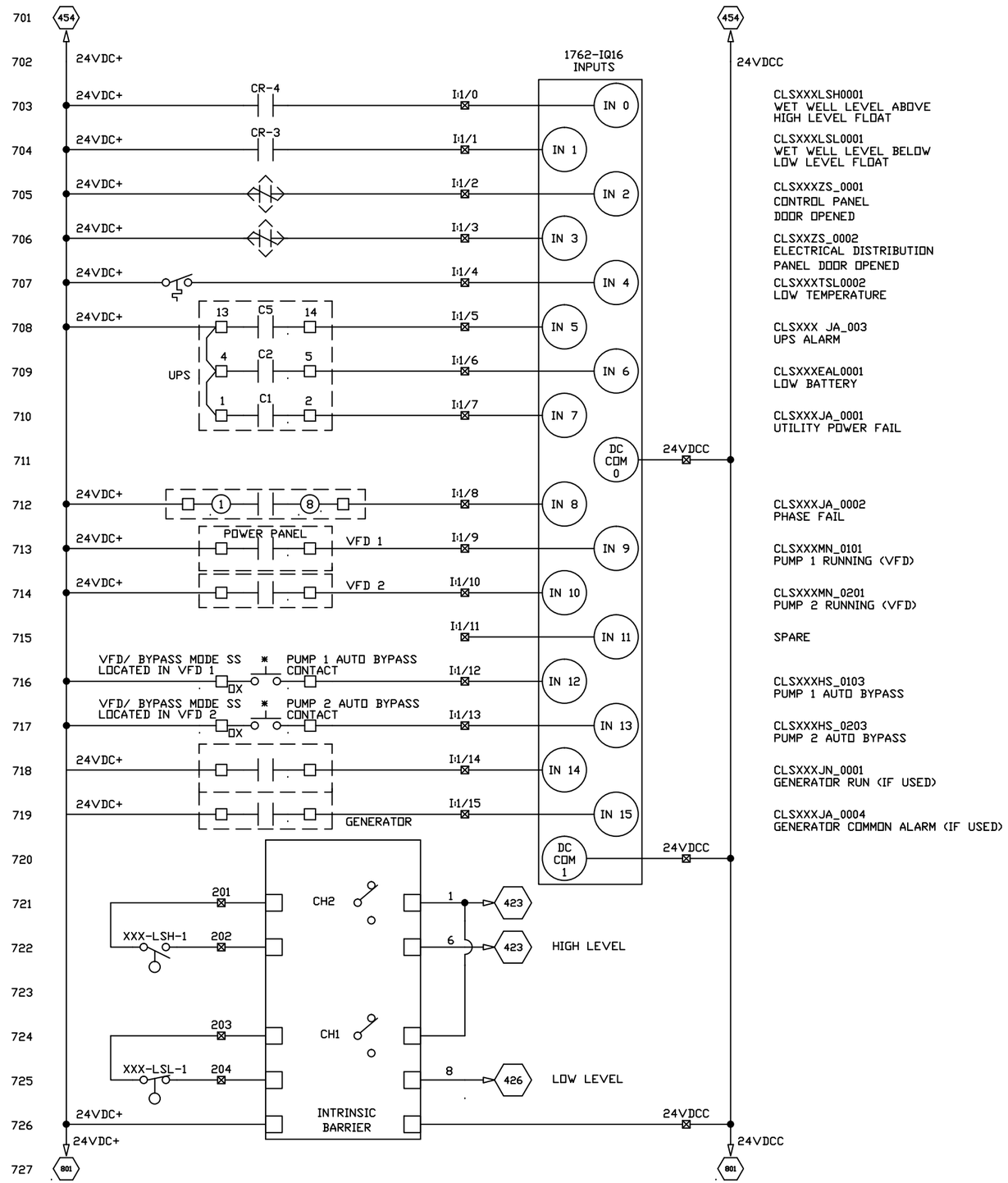

	LEVEL 2 STANDARD
TITLE	DC DIGITAL INPUTS
DRAWING	PAGE 7

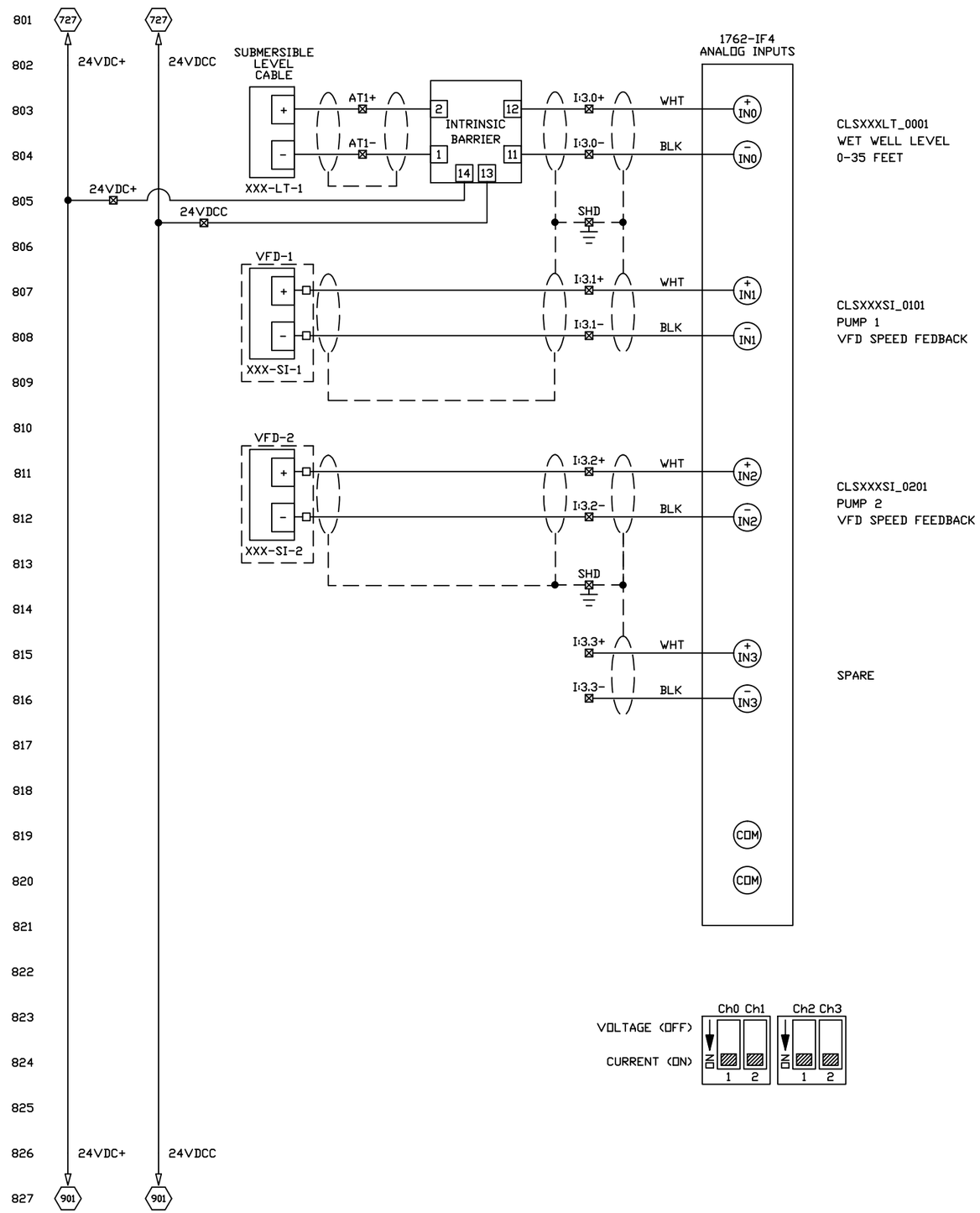

	LEVEL 2 STANDARD
TITLE:	ANALOG INPUTS
DRAWING:	PAGE 8

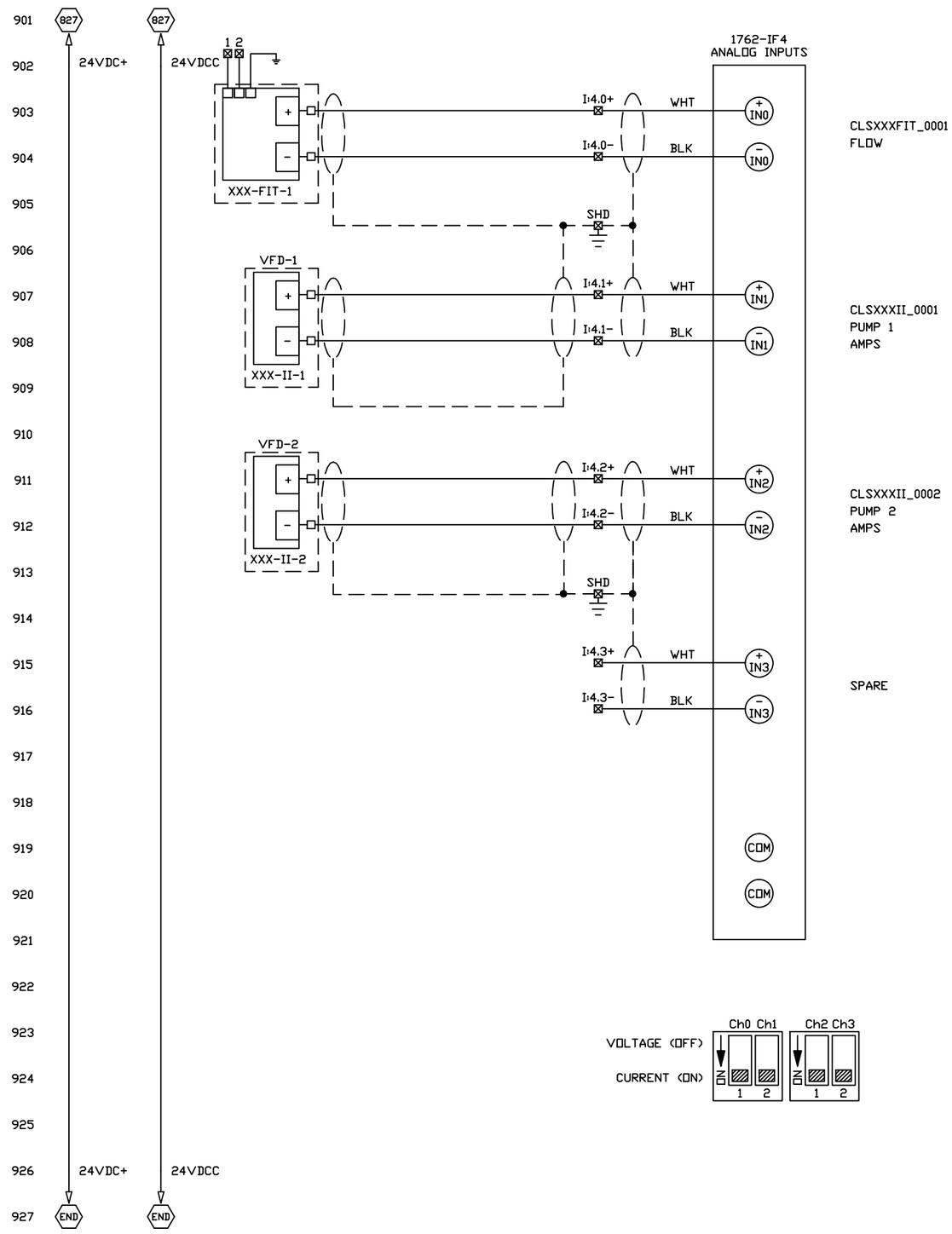

	LEVEL 2 STANDARD
TITLE:	ANALOG INPUTS
DRAWING:	PAGE 9

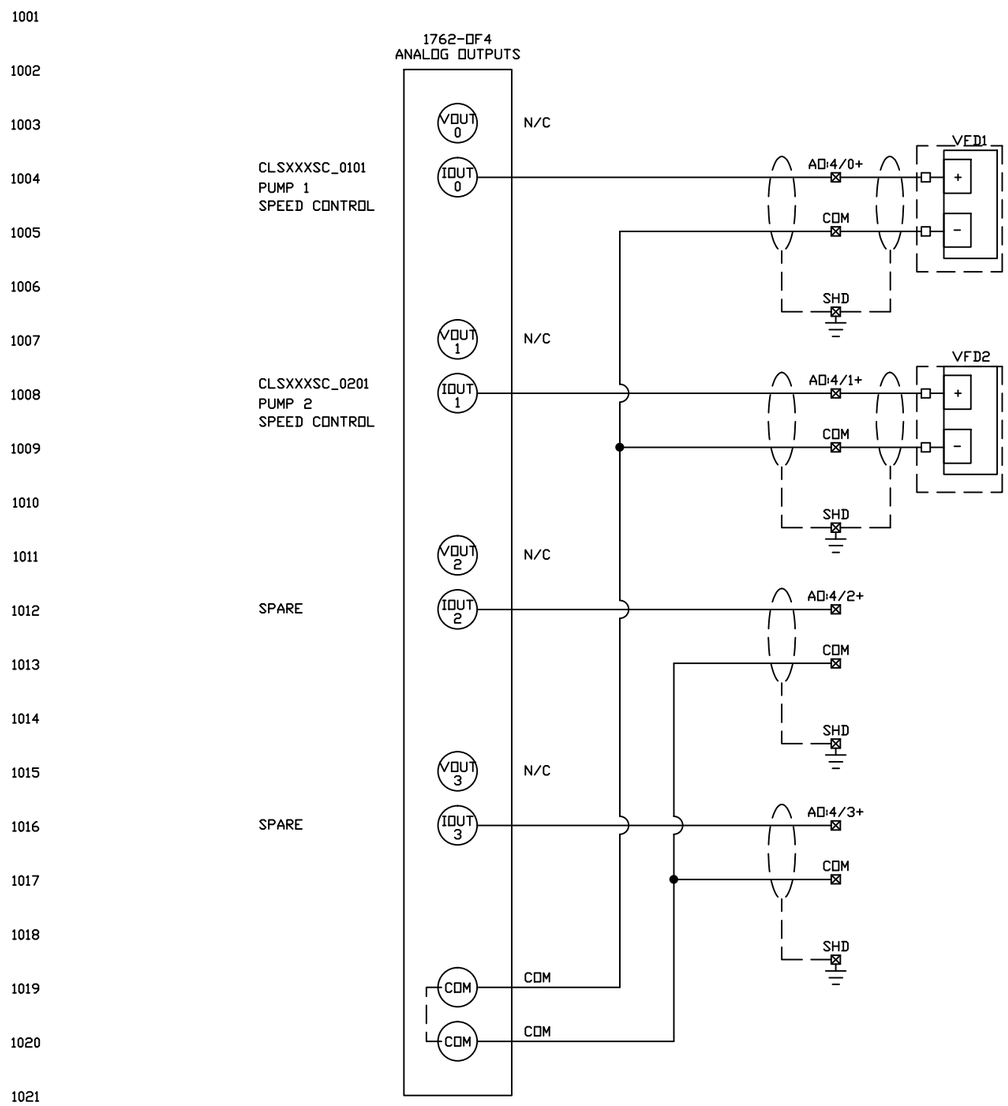

	LEVEL 2 STANDARD
TITLE:	ANALOG OUTPUTS
DRAWING:	PAGE 10

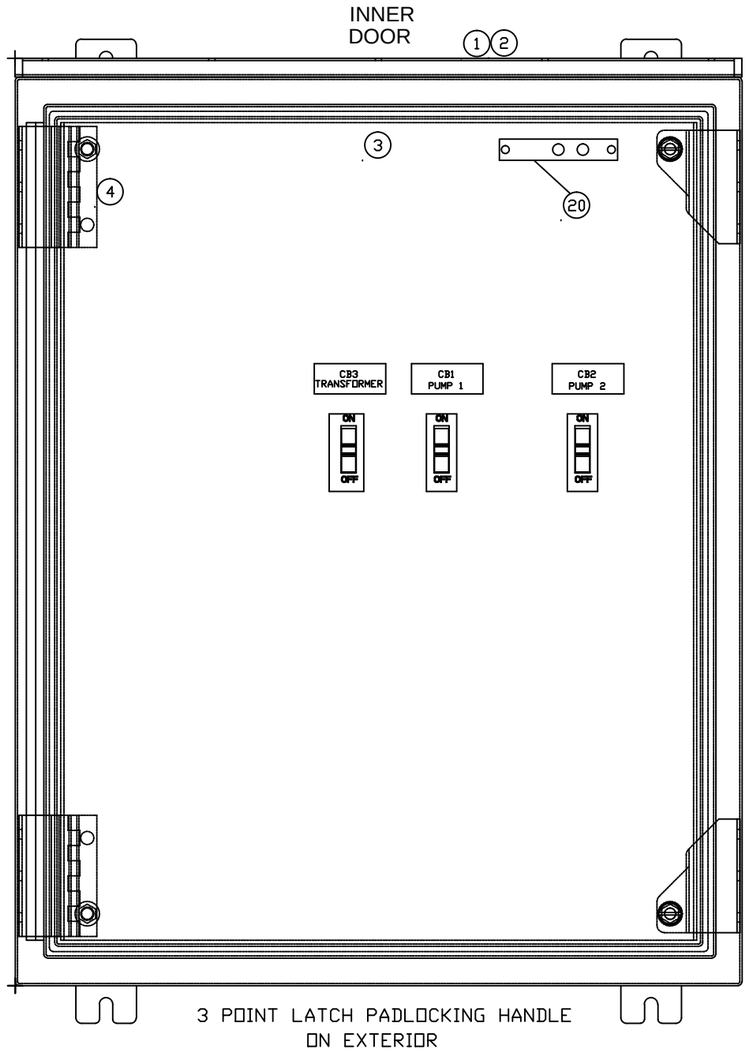

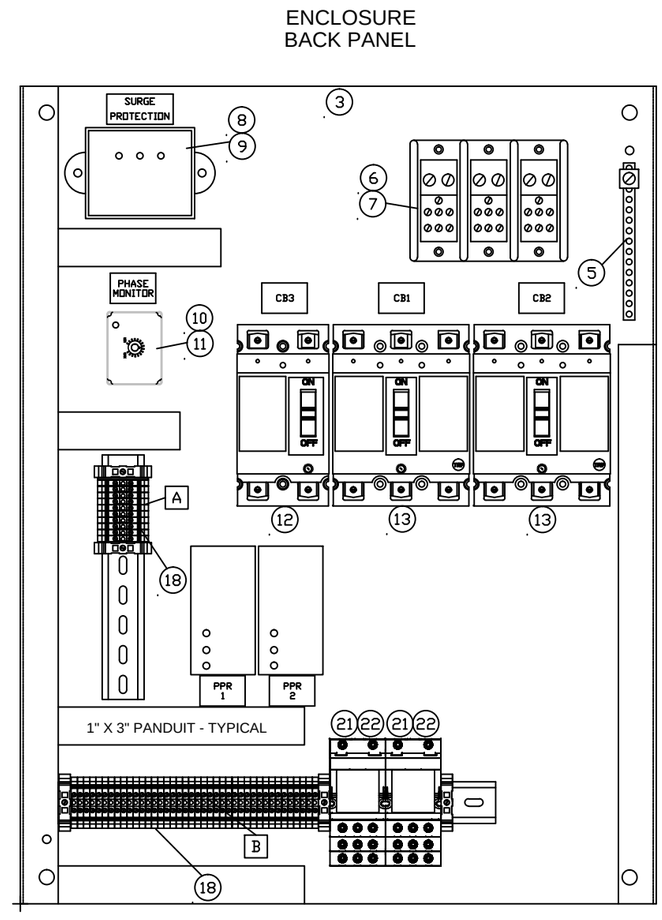

PUMP PROTECTION RELAY UNITS
PROVIDED BY PUMP MANUFACTURER

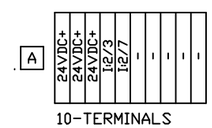

10-TERMINALS

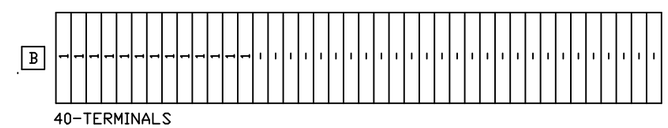

40-TERMINALS

ITEM	QTY	DESCRIPTION	PART NO.	MANUFACTURER
1	1	STAINLESS STEEL ENCLOSURE	-	-
2	1	STAINLESS STEEL DRIP SHIELD	-	-
3	2	PANEL	-	-
4	1	SWING OUT PANEL KIT	-	-
5	1	GROUND BAR	-	-
6	1	DISTRIBUTION BLOCK	-	-
7	1	COVER	-	-
8	1	SURGE ARRESTOR	-	-
9	1	MOUNTING KIT	-	-
10	1	PHASE MONITOR	-	-
11	1	BASE	-	-
12	1	2 POLE CIRCUIT BREAKER, 15A	-	-
13	2	3 POLE CIRCUIT BREAKER LOCKABLE	-	-
14	-	-	-	-
15	-	-	-	-
16	-	-	-	-
17	-	-	-	-
18	50	TERMINAL BLOCK	-	-
19	4	END BLOCK	-	-
20	1	INTRUSION SWITCH	-	-
21	2	RELAY	-	-
22	2	RELAY BASE	-	-
23				
24				
25				
26				
27				
28				
29				
30				
31				
32				
33				
34				
35				
36				
37				
38				

LEVEL 2 STANDARD

TITLE: ELECTRICAL DISTRIBUTION PANEL/BILL OF MATERIALS

DRAWING: PAGE 11

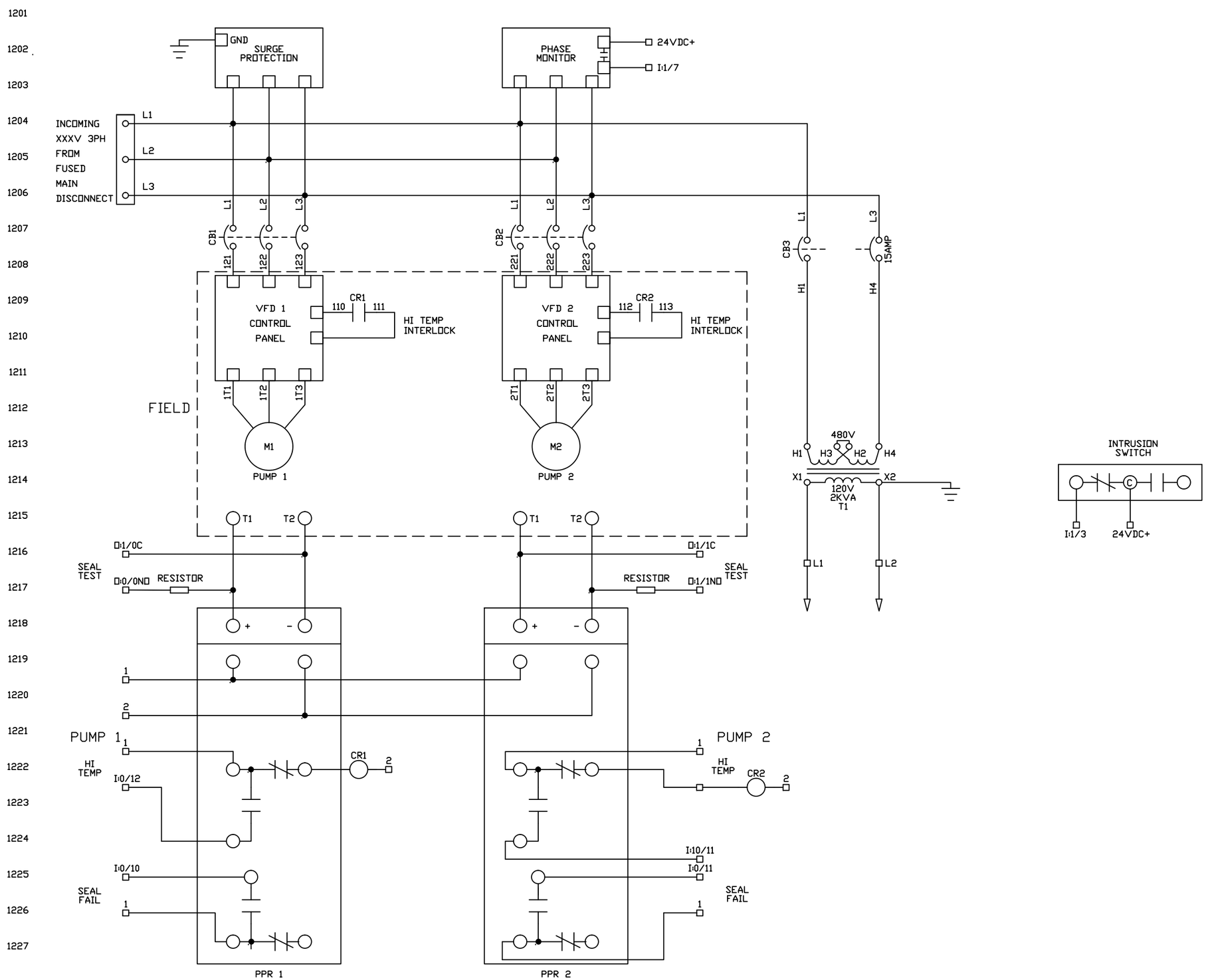

	LEVEL 2 STANDARD
TITLE:	POWER WIRING
DRAWING:	PAGE 12

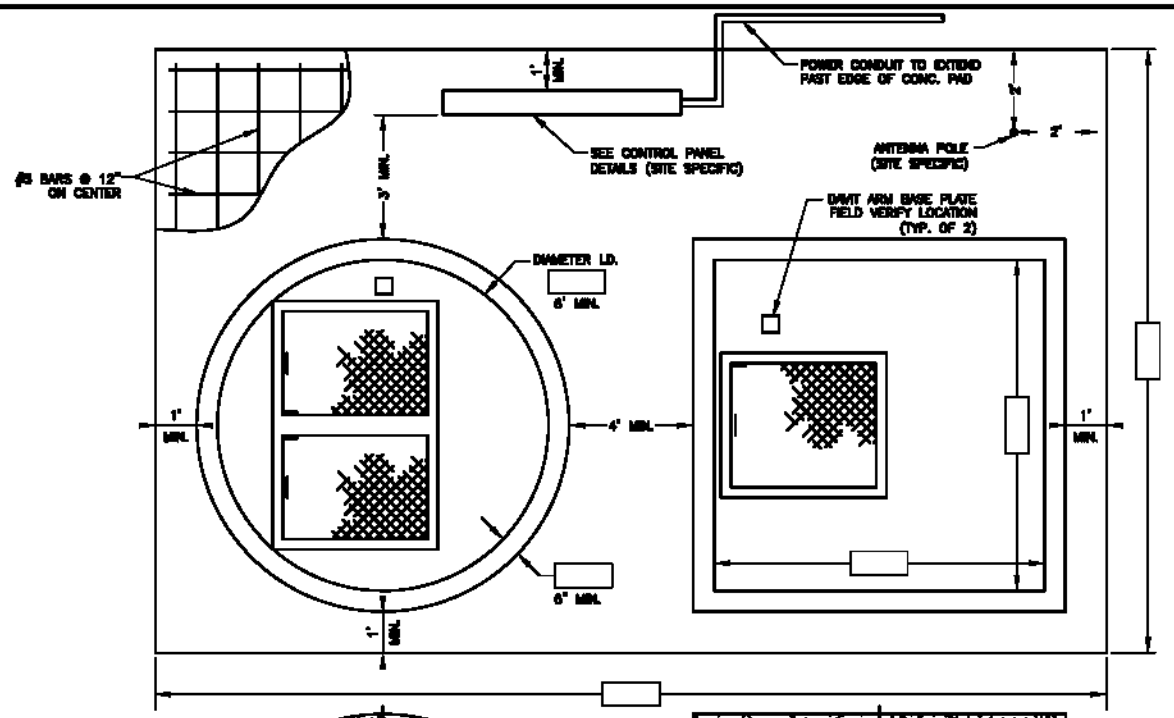

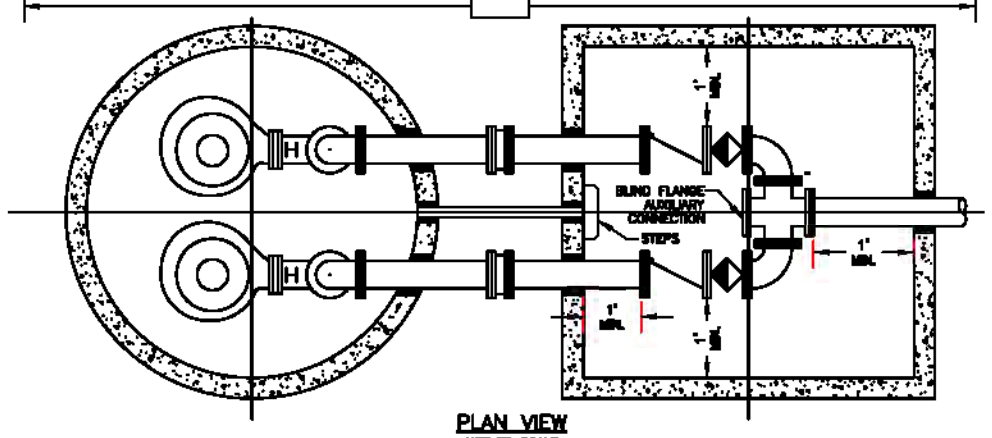

PLAN VIEW
NOT TO SCALE

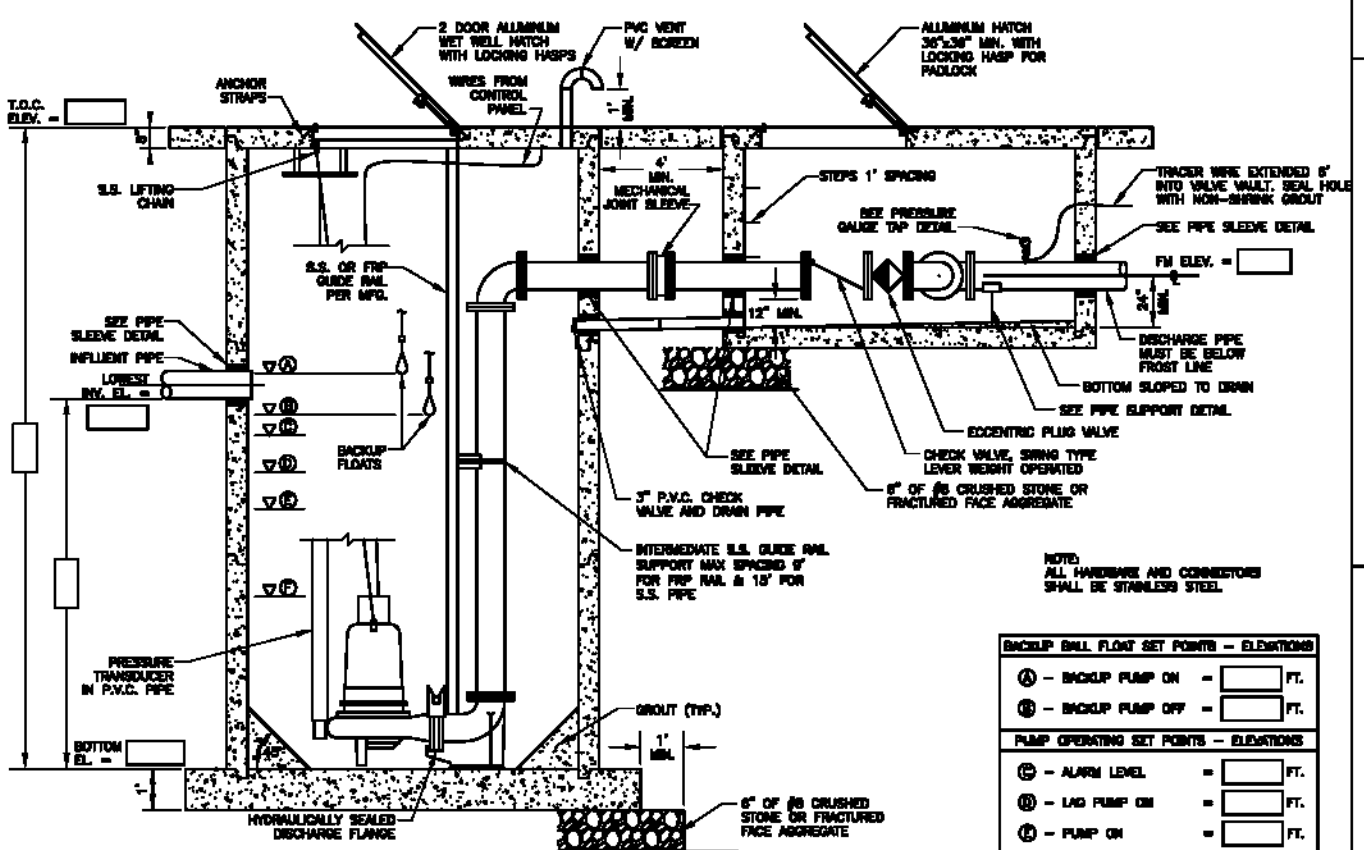

NOTE:
ALL HARDWARE AND CONNECTORS SHALL BE STAINLESS STEEL.

BACKUP BALL FLOAT SET POINTS – ELEVATIONS		
Ⓐ – BACKUP PUMP ON	=	FT.
Ⓑ – BACKUP PUMP OFF	=	FT.
PUMP OPERATING SET POINTS – ELEVATIONS		
Ⓒ – ALARM LEVEL	=	FT.
Ⓓ – LAG PUMP ON	=	FT.
Ⓔ – PUMP ON	=	FT.
Ⓕ – PUMP OFF	=	FT.

SECTION VIEW
NOT TO SCALE

INFORMATION

COUNTY: _____ TOWNSHIP: _____
SECTION: _____ TWP: _____ RANGE: _____
PROJECT: _____
LOCATION: _____

STATION PIPE SIZE, INCHES: _____ FORCE MAIN TYPE: _____
FORCE MAIN SIZE, INCHES: _____ LIFT STATION I.D.: _____
FORCE MAIN LENGTH, FEET: _____

PUMP DATA

	INITIAL	ULTIMATE
DISCHARGE SIZE:		
GPM:		
TDH:		
HP:		
RPM:		
VOLTAGE:		
PHASE:		
MANUFACTURER:		
MODEL:		
IMPELLER SIZE:		

SITE PLAN
NOT TO SCALE

SERVICE AREA
NOT TO SCALE

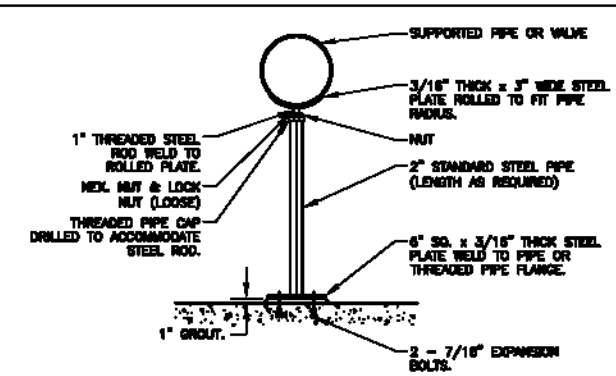

NOTES:
1. PIPE SUPPORTS SHALL BE SPACED NOT MORE THAN 12'-0" ON CENTER. PIPE TO BE SUPPORTED NEAR EACH SIDE OF VALVES, FLOW METERS, AND COUPLINGS.

ADJUSTABLE PIPE SUPPORT DETAIL
NOT TO SCALE

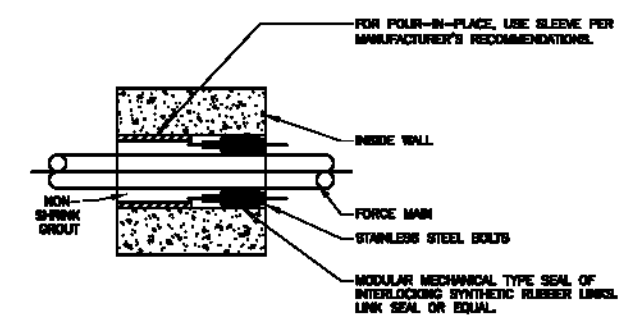

PIPE SLEEVE DETAIL
FOR ALL WALL PENETRATIONS
NOT TO SCALE

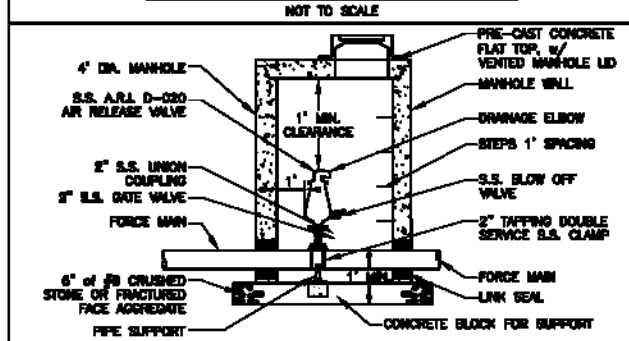

TYPICAL AIR RELEASE VALVE DETAIL
NOT TO SCALE

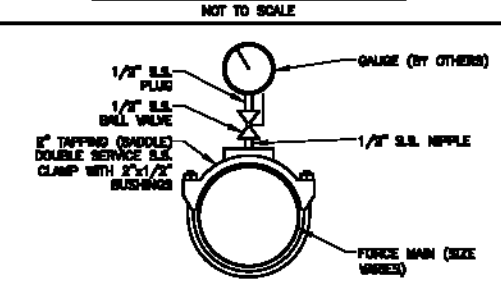

PRESSURE GAUGE TAP DETAIL (TYP.)
NOT TO SCALE

citizens energy group

Date	Checked By	Drawn By	Revision Description	Revision Number

Filename
Project No.
Project Date

CITIZENS ENERGY GROUP

LEVEL 3 SUBMERSIBLE LIFT STATION

STANDARD DETAILS

FIGURE NO.

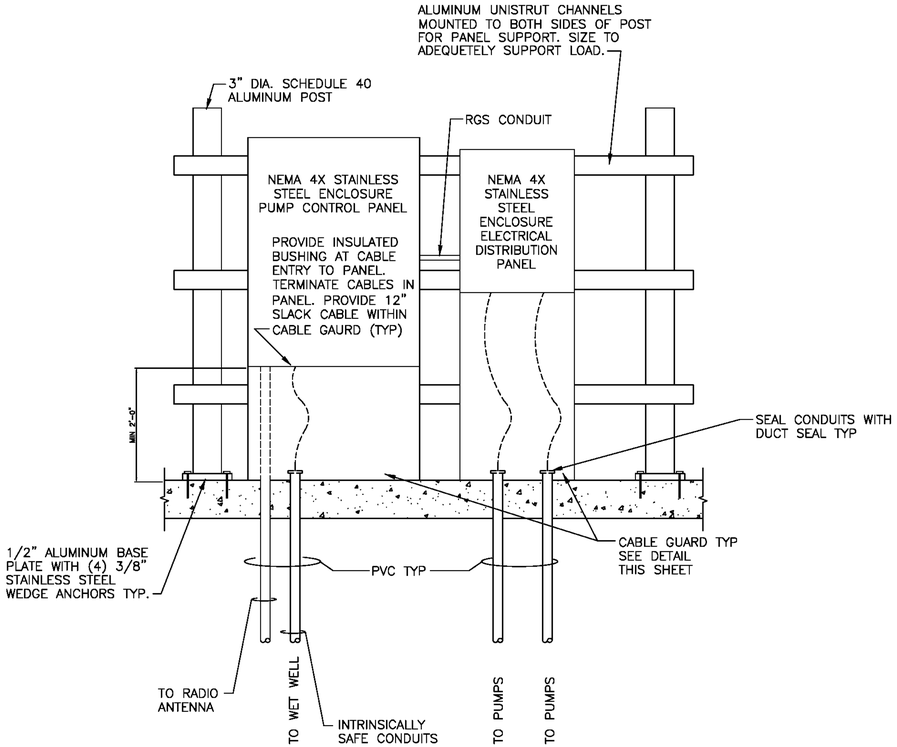

EQUIPMENT MOUNTING DETAIL (FRONT)

NTS

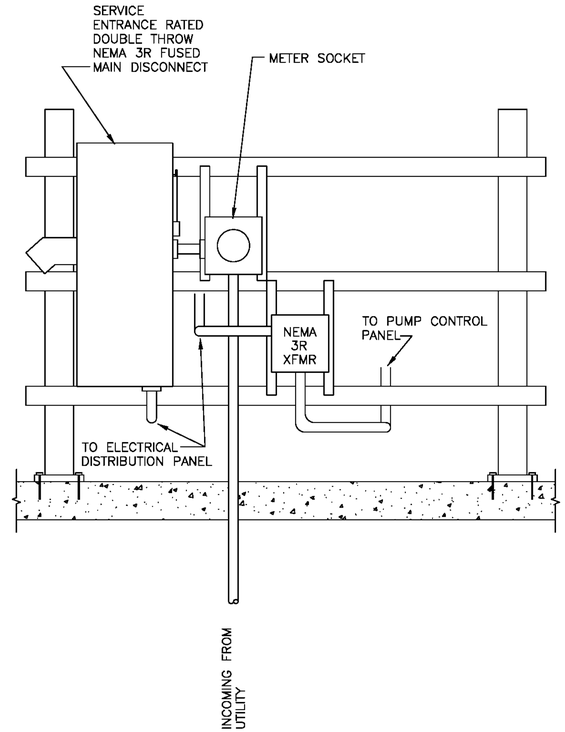

EQUIPMENT MOUNTING DETAIL (REAR)

NTS

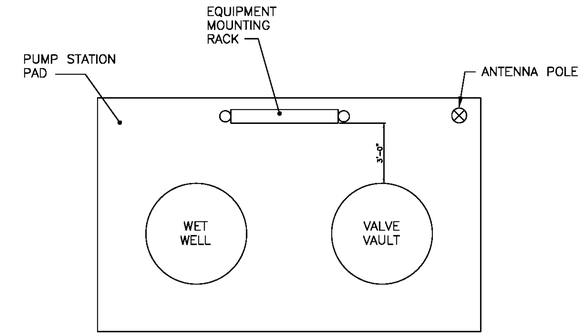

TYPICAL PLAN VIEW

NTS

NOTES:

1. SECURE GUARD TO EQUIPMENT ENCLOSURE WITH 1/4" S.S. BOLTS AND TO CONCRETE WITH 1/4" S.S. WEDGE ANCHORS.
2. PROVIDE VENT ON EACH SIDE.
3. FIELD DETERMINE GUARD DIMENSIONS BASED ON EQUIPMENT PANEL SIZE AND LOCATION.
4. CONSTRUCT GUARD WITH NON-FERROUS MATERIAL SUCH AS FIBERGLASS COMPOSITE, STAINLESS STEEL OR ALUMINUM BASED ON EQUIPMENT PANEL SIZE AND LOCATION.

CABLE GUARD DETAIL

NTS

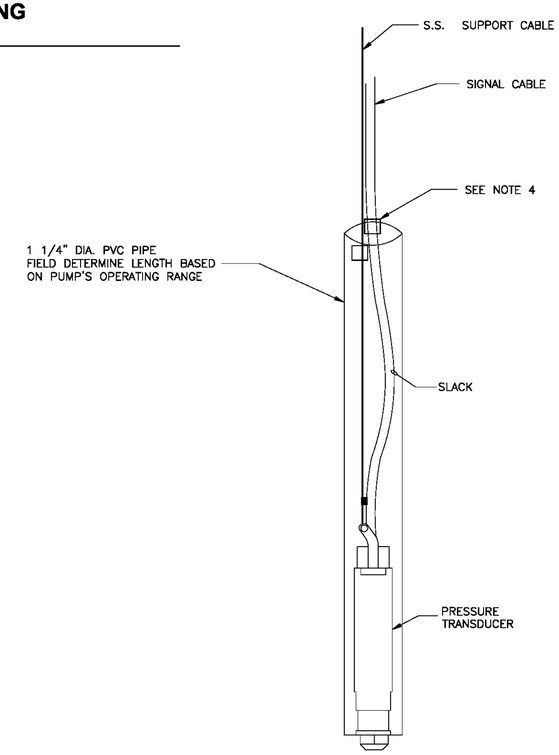

PRESSURE TRANSDUCER DETAIL

NTS

BEFORE INSTALLATION

1. DO NOT DISASSEMBLE THE TRANSDUCER OR LOOSEN THE COMPRESSION NUT AT THE SIGNAL CABLE ENTRY. THIS WILL VOID WARRANTY.
2. DO NOT NICK OR CUT THE SIGNAL CABLE JACKET TO PREVENT LEAKAGE THAT WILL VOID WARRANTY. AVOID ROLLING THE CABLE SPOOL OVER ROCKS, STONES, OR OTHER SHARP OBJECTS.
3. CONFIRM THE CONNECTION BETWEEN THE TRANSDUCER SIGNAL CABLE LEADS AND THE METER OR TRANSMITTER TERMINALS TO ENSURE PROPER OPERATION. REFER TO OPERATOR'S MANUAL. IF NEEDED, DISCONNECT THE SIGNAL CABLE LEADS FROM THE METER OR TRANSMITTER BEFORE INSTALLATION. DO NOT CONNECT THE SIGNAL CABLE LEADS TO ANY OTHER POWER SOURCE.

INSTALLATION

4. DRILL HOLE NEAR TOP OF PVC PIPE (TYP. 2). LOOSELY SECURE THE FREE ENDS OF THE SIGNAL CABLE AND SUPPORT CABLE, IF APPLICABLE, WITH ZIP TIES BEFORE LOWERING INTO THE WET WELL. PROPER INSTALLATION WILL ALLOW RETRIEVAL OF TRANSDUCER FOR MAINTENANCE.
5. HANDLE THE SIGNAL CABLE AND TRANSDUCER WITH CARE DURING INSTALLATION.
6. FOR DEPTHS OVER 300 FEET, USE A SUPPORT CABLE TO CARRY THE WEIGHT OF THE TRANSDUCER. PROVIDE SLACK IN THE SIGNAL CABLE TO PREVENT THE TRANSDUCER'S WEIGHT FROM PULLING ON THE SIGNAL CABLE (SEE DETAIL. ALSO REFER TO THE OPERATOR'S MANUAL).
7. DO NOT ROUTE THE SIGNAL CABLE NEXT TO HIGH VOLTAGE POWER LINES.
8. PROVIDE MEANS TO REMOVE THE TRANSDUCER IF NEEDED IN THE FUTURE.

citizens energy group

Revision Number	Revision Description	Drawn By	Checked By	Date
Revision Date	10/31/2018			

CITIZENS ENERGY GROUP
LEVEL 3 SUBMERSIBLE LIFT STATION
ELECTRICAL DETAILS

FIGURE NO.

500.01

Citzens Energy Group
CLSXXX
Level 3 Standard
Lift Station Control Panel

PAGE	DESCRIPTION
01	TITLE PAGE / DRAWING LIST
02	ENCLOSURE
03	PANEL LAYOUT / BILL OF MATERIALS
04	CONTROL POWER
05	MICROLOGIX 1100 CONTROLLER I/O
06	RELAY OUTPUTS
07	DC DIGITAL INPUTS
08	ANALOG INPUTS
09	POWER PANEL LAYOUT / BILL OF MATERIALS
10	POWER WIRING

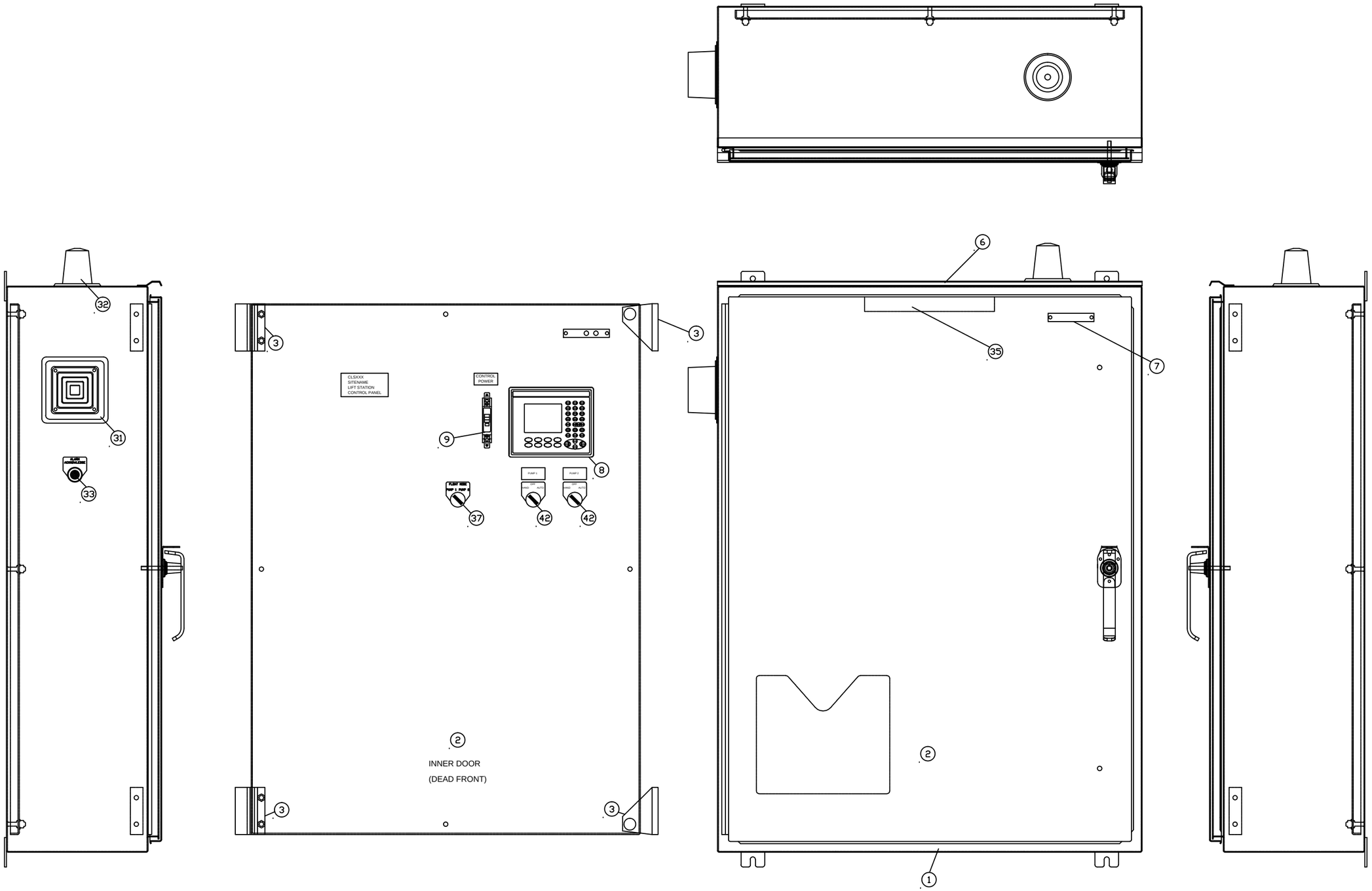

	LEVEL 3 STANDARD
TITLE:	CONTROL ENCLOSURE
DRAWING:	PAGE 2

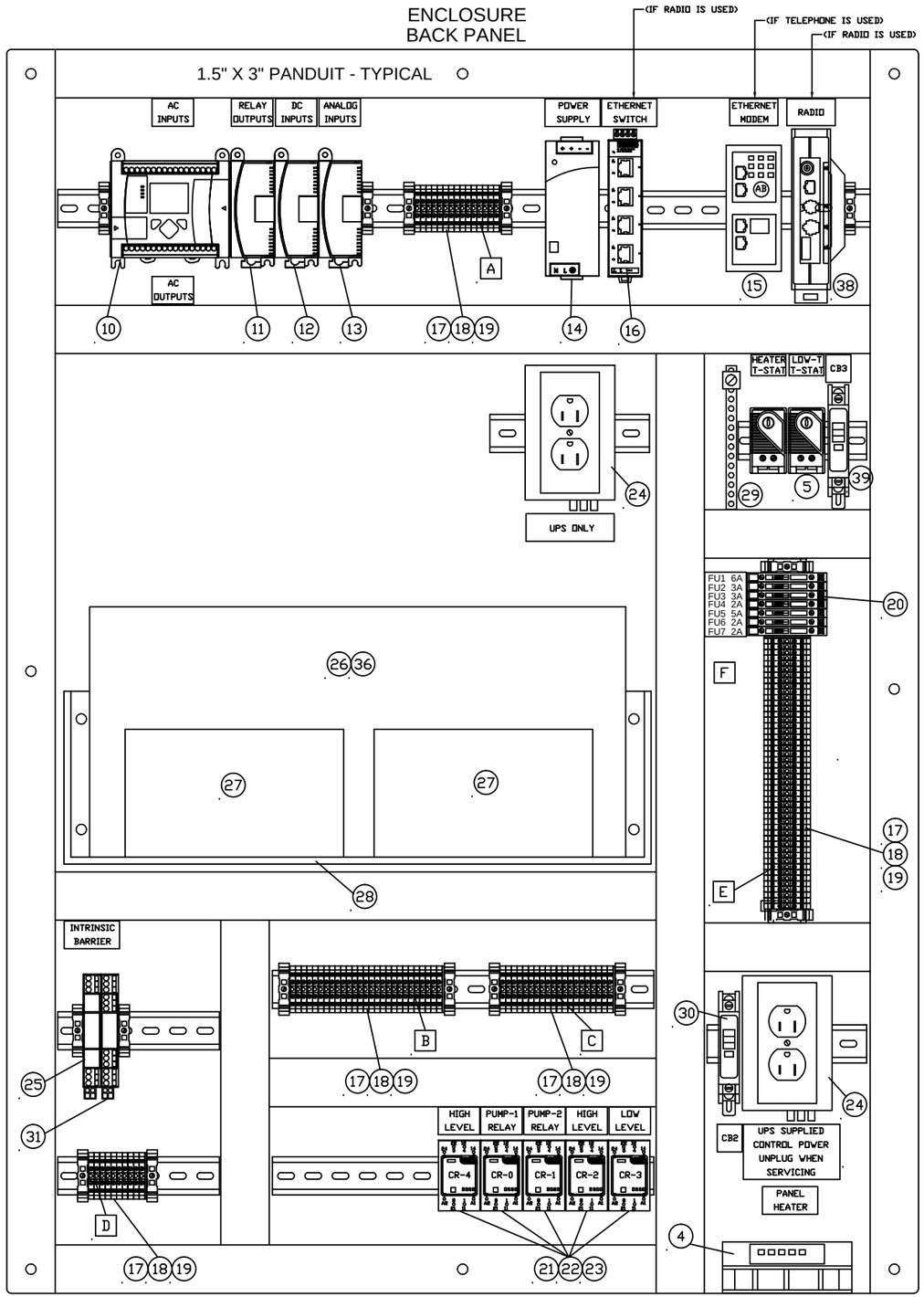

FU-1	6A	
FU-2	3A	
FU-3	3A	
FU-4	2A	
FU-5	5A	
FU-6	2A	
FU-7	5A	

F

L1
1A
L2
2A
1
1
1
1
1
2
2
2
2
2
6
8
L1
100
L1
101
I:0/0
I:0/1
I:0/2
I:0/3
I:0/4
I:0/5
I:0/6
I:0/7
I:0/8
I:0/9
O:0/0
O:0/1
O:0/2H
O:0/2
O:0/3H
O:0/3
O:0/4
O:0/5
O:1/0C
O:1/0NO
O:1/1C
O:1/1NO
O:1/2C
O:1/2NO
O:1/3C
O:1/3NO
O:1/4C
O:1/4NO
O:1/5C
O:1/5NO

E

50-TERMINALS

ITEM	QTY	DESCRIPTION	PART NO.	MANUFACTURE
1	1	SS ENCLOSURE	48"X36"X12"	-
2	2	BACK PANEL	-	-
3	1	DEAD FRONT KIT	-	-
4	1	HEATER	-	-
5	2	THERMOSTAT	-	-
6	1	DRIPSHIELD	-	-
7	1	DOOR SWITCH	-	-
8	1	OPERATOR INTERFACE	2711P-K4M20D	ALLEN BRADLEY
9	1	CIRCUIT BREAKER 20A	-	-
10	1	PLC PROCESSOR WITH DI 10 PT DO 6 PT	1763-L16AWA	ALLEN BRADLEY
11	1	RELAY OUTPUT 6 PT	1762-OX8I	ALLEN BRADLEY
12	1	DC DIGITAL INPUT 16 PT	1762-IQ16	ALLEN BRADLEY
13	1	ANALOG INPUT 4 PT	1762-IF4	ALLEN BRADLEY
14	1	24VDC POWER SUPPLY 2.5 AMP	-	-
15	1	ETHERNET MODEM	9300 RADES	ALLEN BRADLEY
16	1	5 PORT ETHERNET SWITCH	-	-
17	125	TERMINAL BLOCK	-	-
18	5	END COVER	-	-
19	14	END BLOCK	-	-
20	7	FUSE BLOCK	-	-
21	5	AC RELAY 3 POLE	-	-
22	5	RELAY BASE	-	-
23	5	RELAY CLIP	-	-
24	2	RECEPTACLE	-	-
25	1	ANALOG INTRINSIC BARRIER	-	-
26	1	UPS 650VA NOVUS FXM	01-219-21	ALPHA TECH
27	2	UPS BATTERY	181-025-10	ALPHA TECH
28	1	UPS RACK	-	-
29	1	GROUND BAR	-	-
30	1	DIGITAL INTRINSIC BARRIER DUAL	-	-
31	1	ALARM HORN WITH TRIM RING	-	-
32	1	ALARM LIGHT	-	-
33	1	PUSHBUTTON	-	-
34	1	CIRCUIT BREAKER 15A	-	-
35	1	FLUORESCENT LIGHT WITH SWITCH	-	-
36	1	BATTERY CABLE KIT	740-767-21	ALPHA TECH
37	1	2 POSITION SELECTOR SWITCH	-	-
38	1	RADIO	ENTRANET	GE/MDS
39	1	GFI CIRCUIT BREAKER 15A	-	-
40	1	PHONE LINE SURGE PROTECTOR	SP365-R2	BLACK BOX
41	1	FILTERED MODEM PROTECTOR	WAL40	SANDMAN
42	2	3 POSITION SELECTOR SWITCH	-	-

A

24VDC+
24VDC+
24VDC+
24VDC+
24VDC+
24VDC+
24VDC+
24VDC
24VDC
24VDC
24VDC
24VDC
24VDC
24VDC
24VDC

15-TERMINALS

B

I:2/0	I:2/1	I:2/2	I:2/3	I:2/4	I:2/5	I:2/6	I:2/7	I:2/8	I:2/9	I:2/10	I:2/11	I:2/12	I:2/13	I:2/14	I:2/15	-	-	-	-	-	-	-	-	-	-	-

27-TERMINALS

C

I:3.0+	I:3.0-	SHD	I:3.1+	I:3.1-	I:3.2+	I:3.2-	SHD	I:3.3+	I:3.3-	-	-	-	-	-	-	-	-	-	-

20-TERMINALS

D

AT1+	AT1-	-	-	201	202	203	204	-	-

10-TERMINALS

	LEVEL 3 STANDARD
TITLE	CONTROL PANEL LAYOUT/BILL OF MATERIALS
DRAWING	PAGE 3

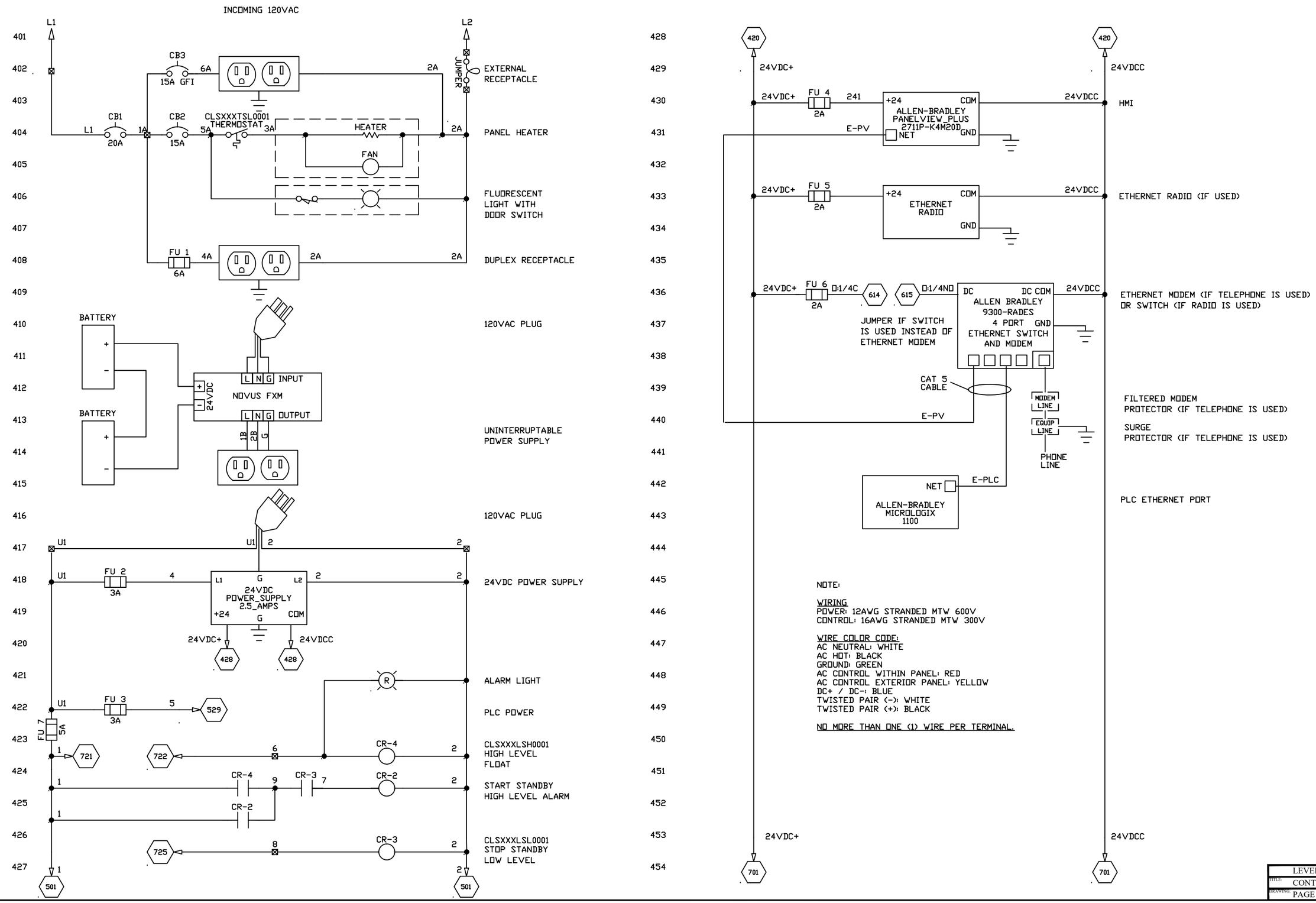
INCOMING 120VAC
L1
L2
CB3
15A GFI
6A
2A
JUMPER
EXTERNAL RECEPTACLE
CB1
20A
CB2
15A
1A
5A
CLSXXXTSL0001
THERMOSTAT
3A
HEATER
FAN
PANEL HEATER
FLUORESCENT LIGHT WITH DOOR SWITCH
FU 1
6A
4A
DUPLEX RECEPTACLE
BATTERY
120VAC PLUG
L N G INPUT
NOVUS FXM
24VDC
L N G OUTPUT
1B 2B G
UNINTERRUPTABLE POWER SUPPLY
U1
FU 2
3A
4
24VDC POWER SUPPLY
24VDC POWER_SUPPLY 2.5_AMPS
L1 G L2
+24 G COM
24VDC+
24VDCC
428
ALARM LIGHT
FU 3
5
529
PLC POWER
FU 7
5A
721
722
6
CR-4
CLSXXXLSH0001 HIGH LEVEL FLOAT
CR-3
7
CR-2
9
START STANDBY HIGH LEVEL ALARM
725
8
CLSXXXLSL0001 STOP STANDBY LOW LEVEL
501
420
24VDC+
FU 4
2A
241
+24 COM
ALLEN-BRADLEY PANELVIEW_PLUS 2711P-K4M20D
NET GND
E-PV
24VDCC
HMI
FU 5
ETHERNET RADIO
ETHERNET RADIO (IF USED)
FU 6
01/4C
614
615
01/4NO
DC DC COM
ALLEN BRADLEY 9300-RADES 4 PORT ETHERNET SWITCH AND MODEM
GND
JUMPER IF SWITCH IS USED INSTEAD OF ETHERNET MODEM
ETHERNET MODEM (IF TELEPHONE IS USED) OR SWITCH (IF RADIO IS USED)
CAT 5 CABLE
MODEM LINE
EQUIP LINE
PHONE LINE
FILTERED MODEM PROTECTOR (IF TELEPHONE IS USED)
SURGE PROTECTOR (IF TELEPHONE IS USED)
NET
E-PLC
ALLEN-BRADLEY MICROLOGIX 1100
PLC ETHERNET PORT
701
NOTE:
WIRING
POWER: 12AWG STRANDED MTW 600V
CONTROL: 16AWG STRANDED MTW 300V
WIRE COLOR CODE:
AC NEUTRAL: WHITE
AC HOT: BLACK
GROUND: GREEN
AC CONTROL WITHIN PANEL: RED
AC CONTROL EXTERIOR PANEL: YELLOW
DC+ / DC-: BLUE
TWISTED PAIR (-): WHITE
TWISTED PAIR (+): BLACK
NO MORE THAN ONE (1) WIRE PER TERMINAL.
LEVEL 3 STANDARD
TITLE: CONTROL POWER DIAGRAM
DRAWING: PAGE 4

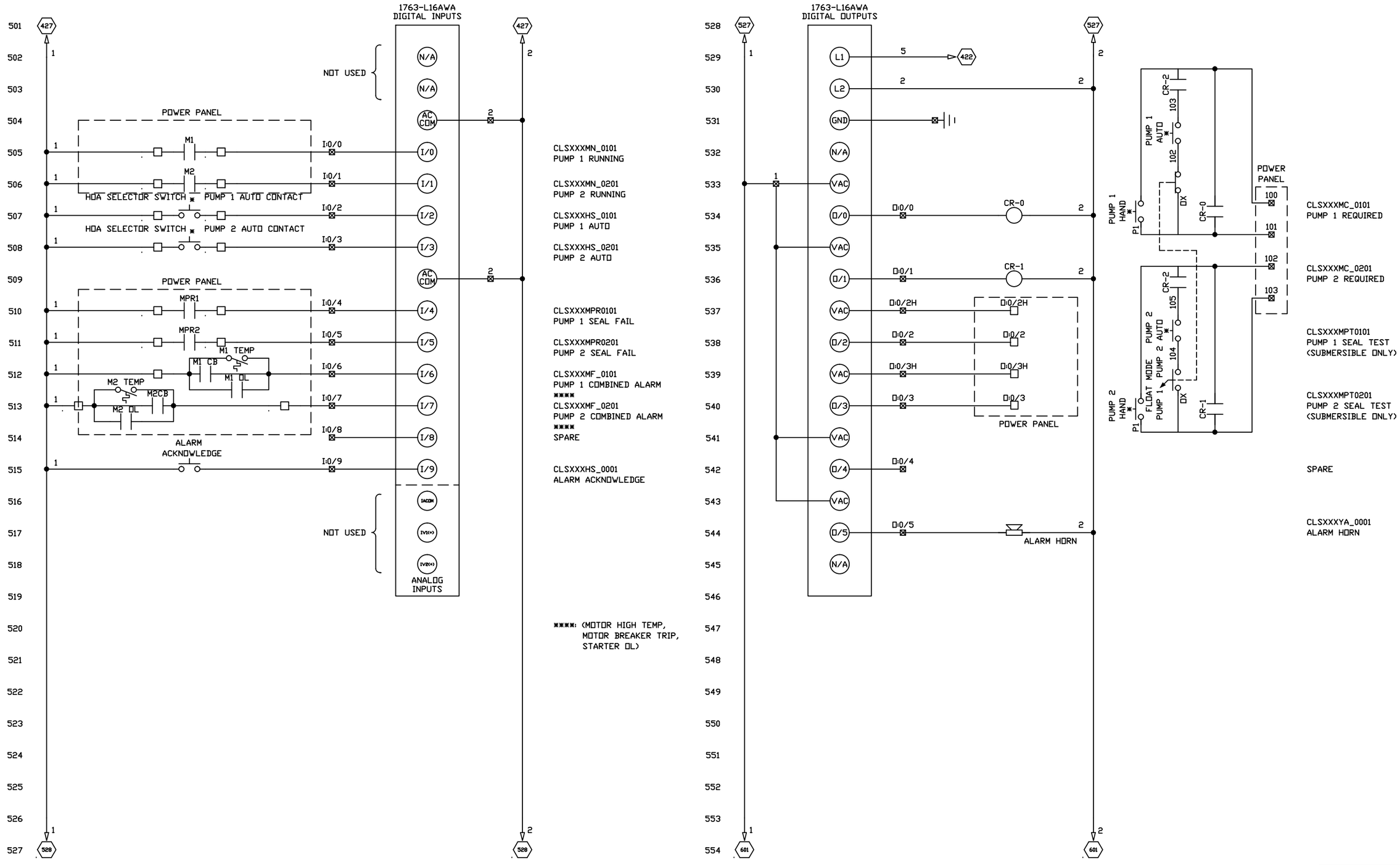

	LEVEL 3 STANDARD
TITLE:	MICROLOGIX 1100
DRAWING:	PAGE 5

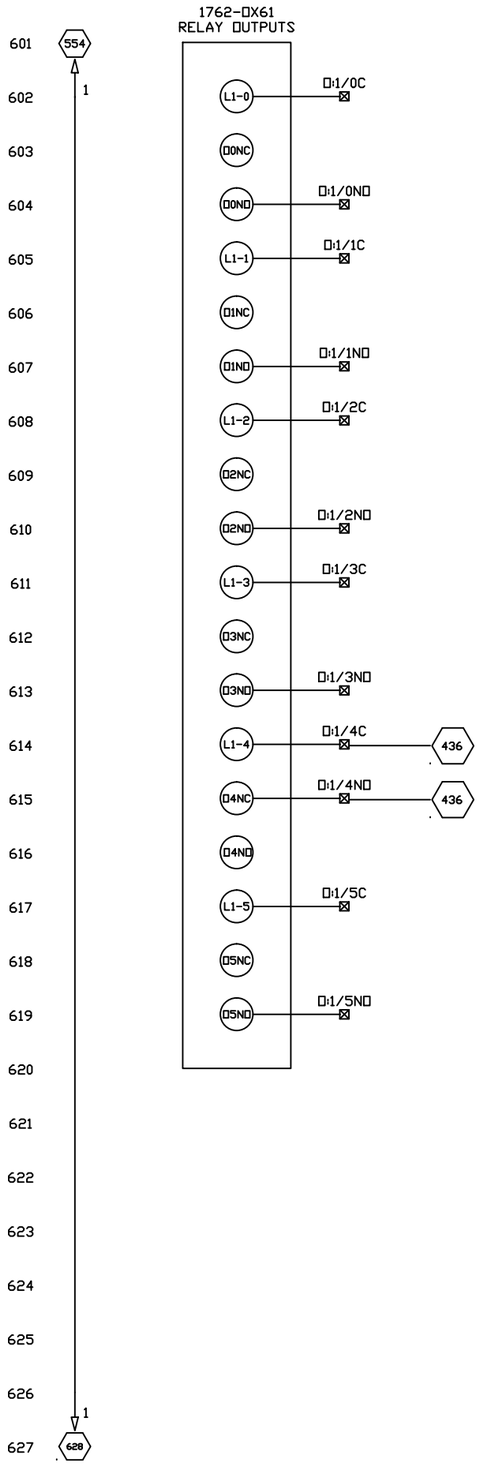

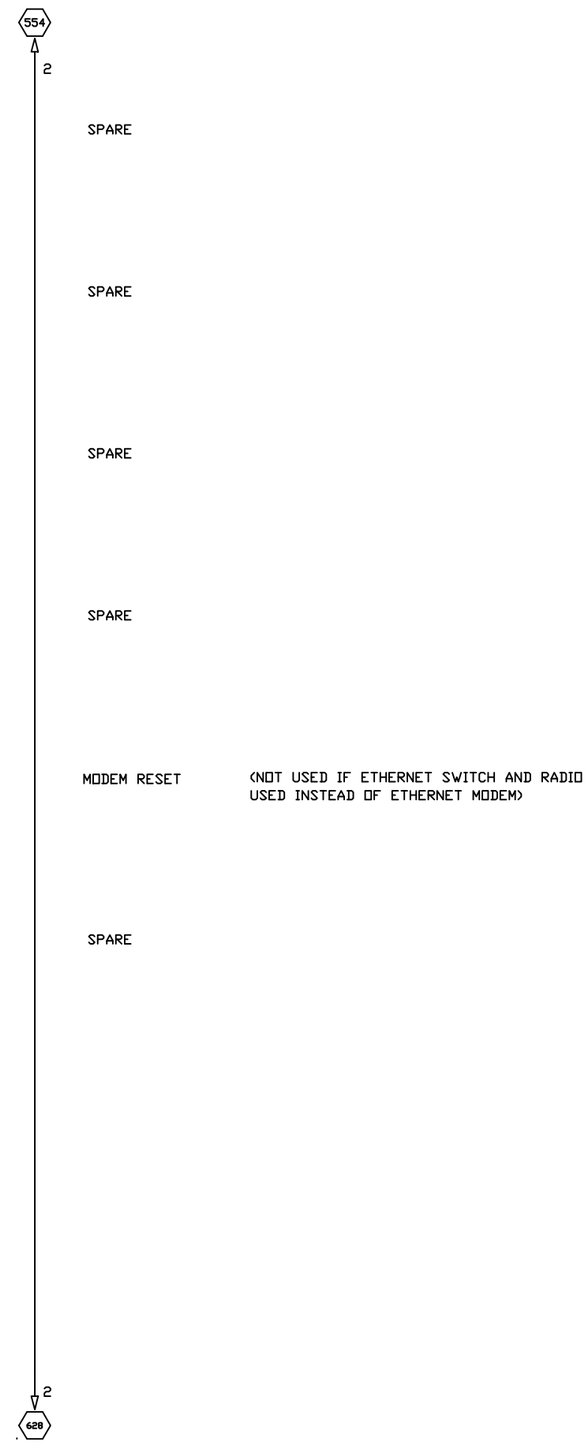

	LEVEL 3 STANDARD
TITLE:	RELAY OUTPUTS
DRAWING:	PAGE 6

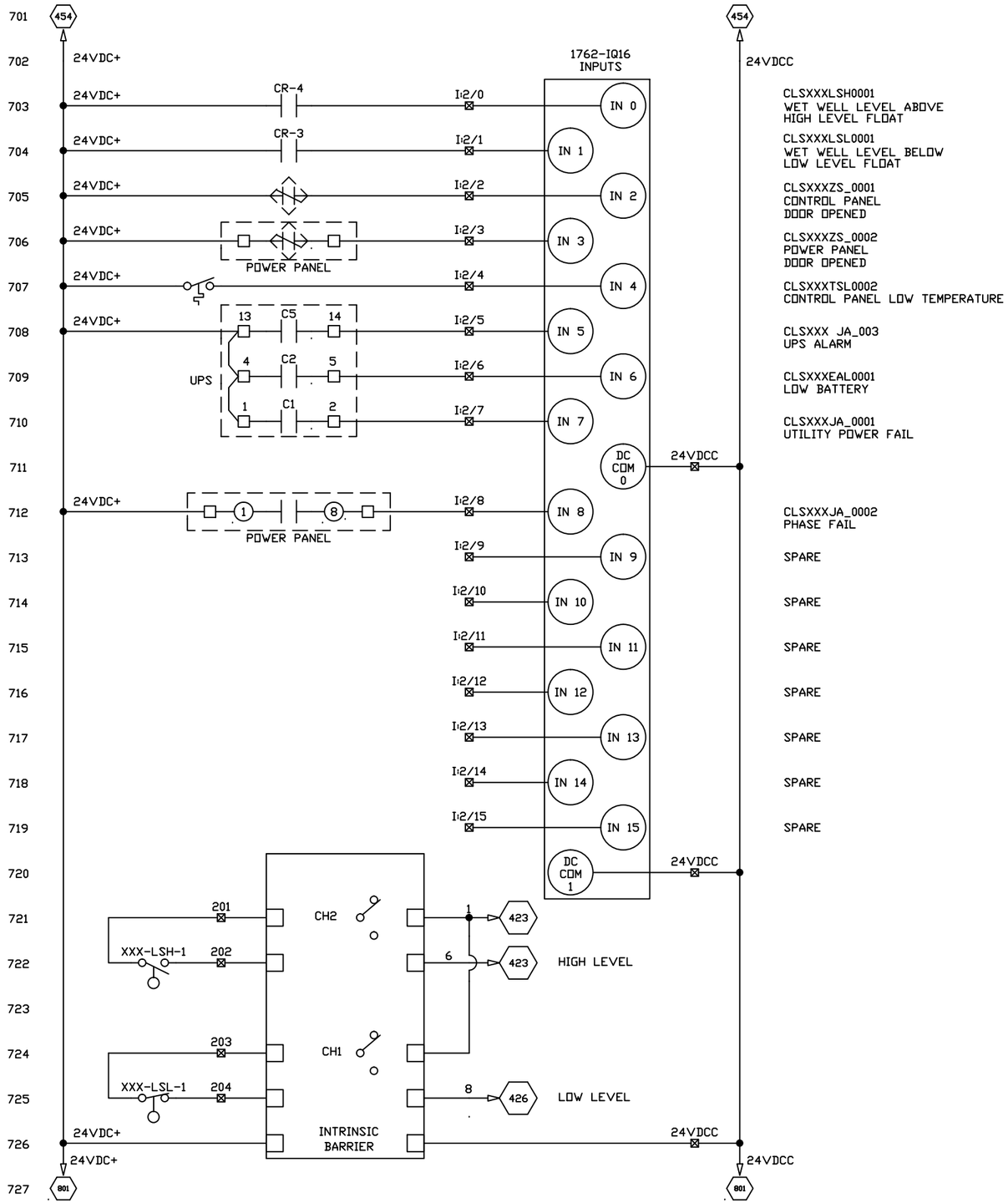

	LEVEL 3 STANDARD
TITLE	DC DIGITAL INPUTS
DRAWING	PAGE 7

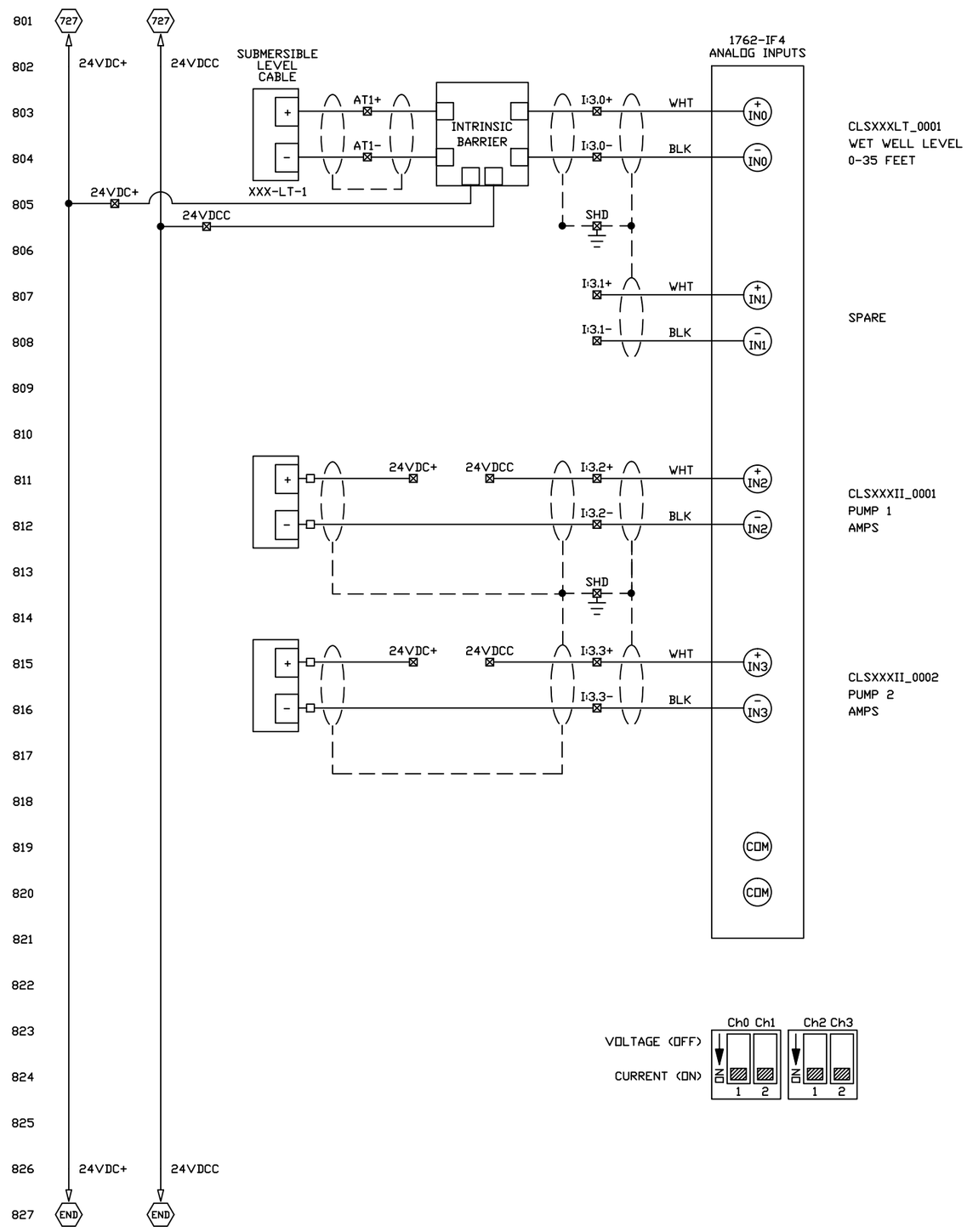

	LEVEL 3 STANDARD
TITLE:	ANALOG INPUTS
DRAWING:	PAGE 8

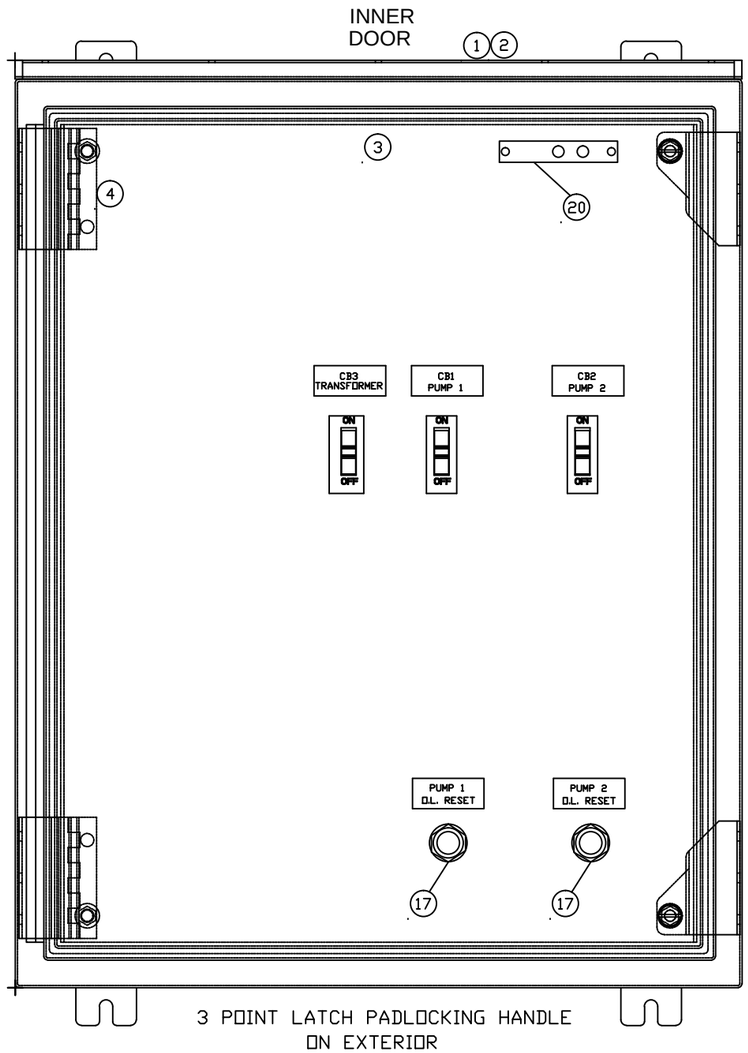

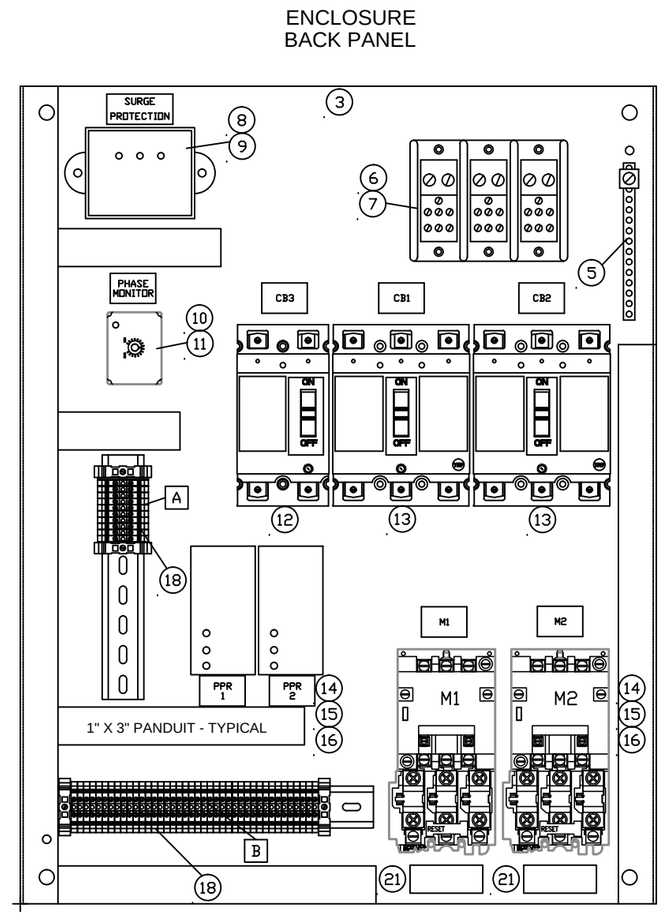

ITEM	QTY	DESCRIPTION	PART NO.	MANUFACTURER
1	1	STAINLESS STEEL ENCLOSURE	-	-
2	1	STAINLESS STEEL DRIP SHIELD	-	-
3	2	PANEL	-	-
4	1	SWING OUT PANEL KIT	-	-
5	1	GROUND BAR	-	-
6	1	DISTRIBUTION BLOCK	-	-
7	1	COVER	-	-
8	1	SURGE ARRESTOR	-	-
9	1	MOUNTING KIT	-	-
10	1	PHASE MONITOR	-	-
11	1	BASE	-	-
12	1	2 POLE CIRCUIT BREAKER, 15A	-	-
13	2	3 POLE CIRCUIT BREAKER LOCKABLE, 30A	-	-
14	2	STARTER	-	-
15	6	OVERLOAD THERMAL	-	-
16	2	OVERLOAD CONTACT	-	-
17	2	OVERLOAD RESET	-	-
18	50	TERMINAL BLOCK	-	-
19	4	END BLOCK	-	-
20	1	INTRUSION SWITCH	-	-
21	2	CURRENT TRANSMITTER		
22				
23				
24				
25				
26				
27				
28				
29				
30				
31				
32				
33				
34				
35				
36				
37				
38				

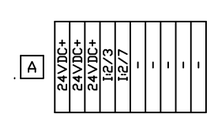

LEVEL 3 STANDARD

TITLE: POWER PANEL LAYOUT/BILL OF MATERIALS

DRAWING: PAGE 9

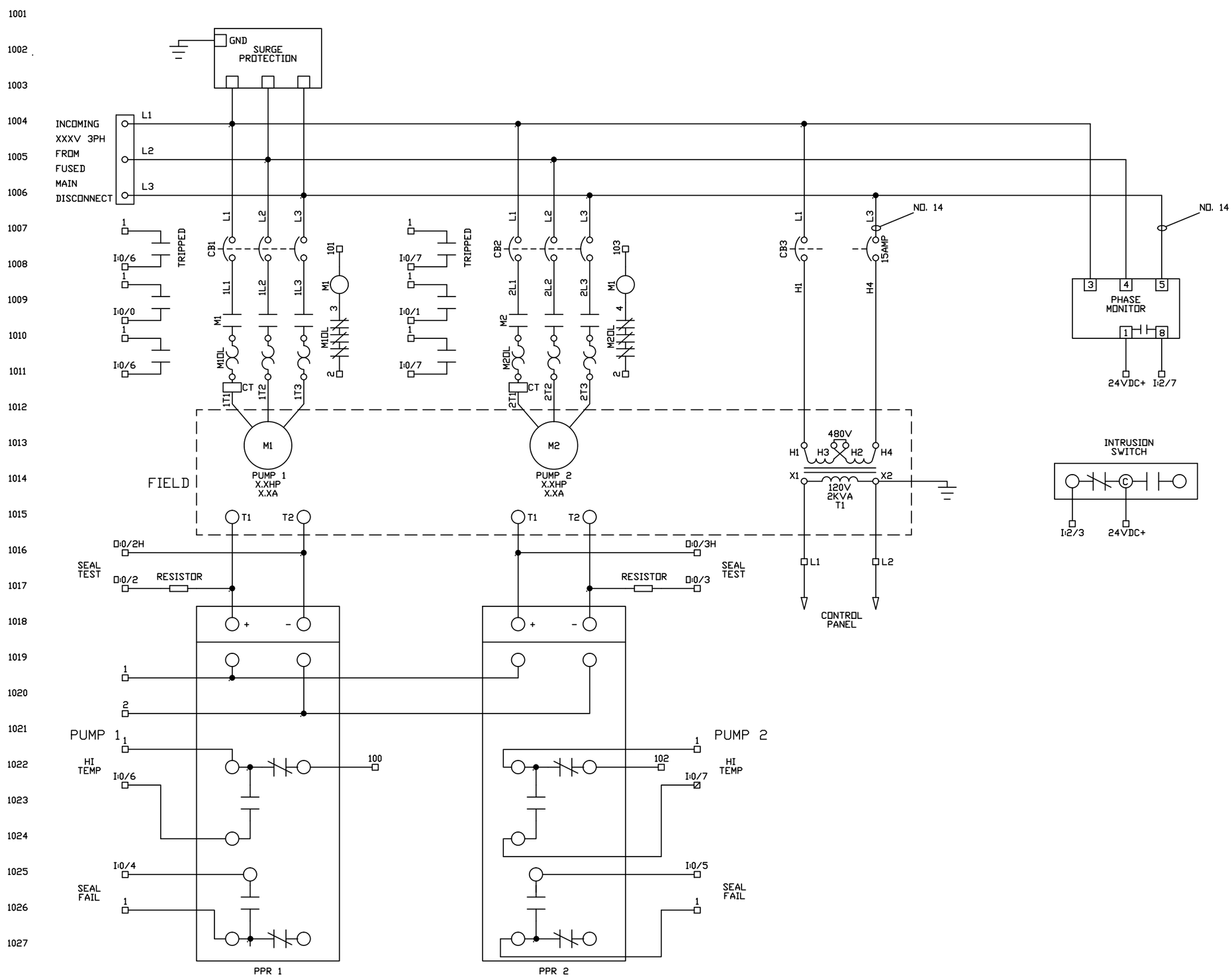

	LEVEL 3 STANDARD
TITLE:	POWER WIRING
DRAWING:	PAGE 10

KEYED NOTES:

1. EMERSON PROCESS CONTROL - CONTROL WAVE MICRO
2. HOFFMAN ENCLOSURE
3. HOFFMAN BACK PANEL
4. 24VDC 50 WATT POWER SUPPLY
5. CIRCUIT BREAKERS OF FUSED POWER TERMINAL BLOCKS
6. UTILITY RECEPTACLE
7. PHOENIX CONTACT TERMINAL BLOCKS
8. APC UPS MODEL BR700
9. PHOENIX CONTACT DPDT INTERPOSING RELAYS
10. RADIO MODEM
11. POLYPHASOR SURGE PROTECTION
12. AC SURGE PROTECTION
13. THERMOSTATICALLY CONTROLLED HEATER
14. GROUND BUS
15. PHOENIX CONTACT ANALOG SIGNAL ISOLATOR
16. PLASTIC WIRING DUCTS (TYPICAL)
17. NORTEK MODEL 212W KEYPAD/DISPLAY UNIT TO BE ACCESSIBLE FROM EXTERIOR OF PANEL
18. INNER HINGED DOOR.

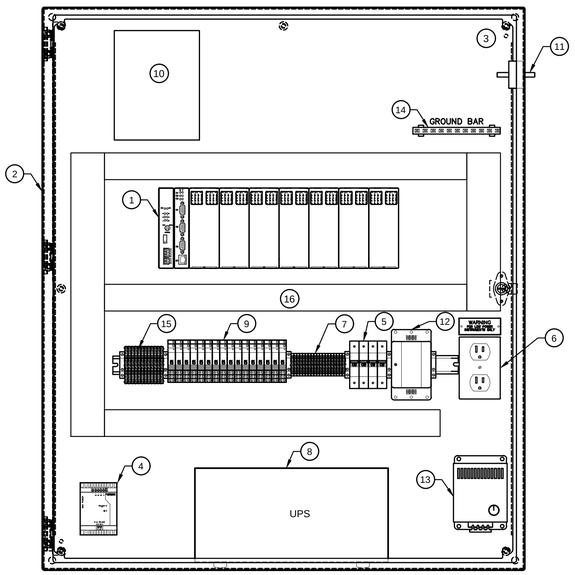

INSIDE PANEL ELEVATION

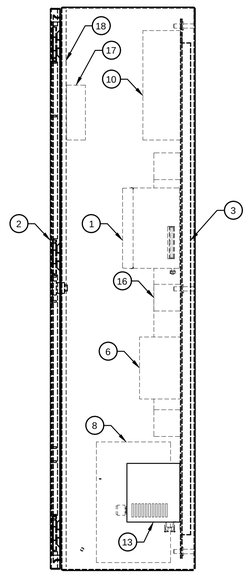

SIDE ELEVATION

RTU PANEL LAYOUT

SCALE: NONE

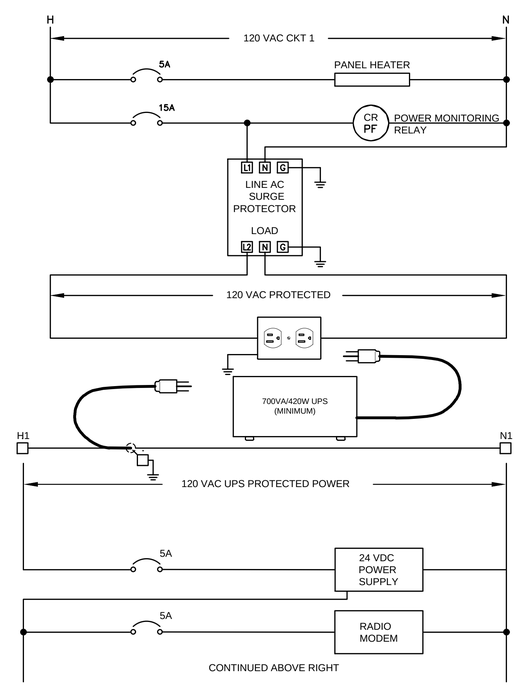

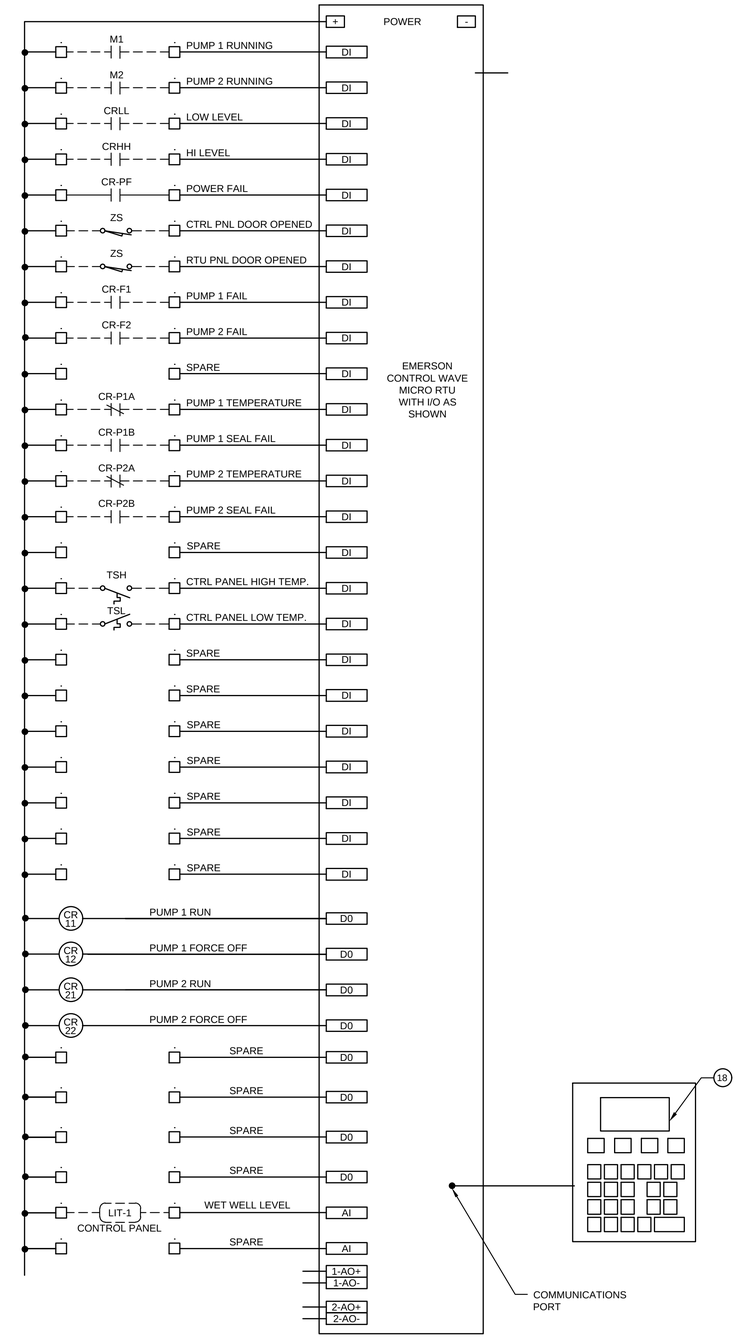

RTU PANEL WIRING DIAGRAM

SCALE: NONE

Revision Number	Revision Description	Drawn By	Checked By	Date

Filename
Project No.
Project Date

CONSTANT SPEED SUBMERSIBLE LIFT STATION

STANDARD INSTRUMENTATION & CONTROL DETAILS

SHEET NO.

IC—1

D:\temp\wp\wo\irvin\00\00\0\wo\s\6\6\6\6\5\5\5\EL\Y\yellella\JK\VR\P\SKC\Jv Cr-CarlGIAR\Ar\aw\JJ Eg\sp\aen\Eenmwa\g\1\5\Fl 1c1ha.dwg
Dec 14, 2018 - 2:52pm

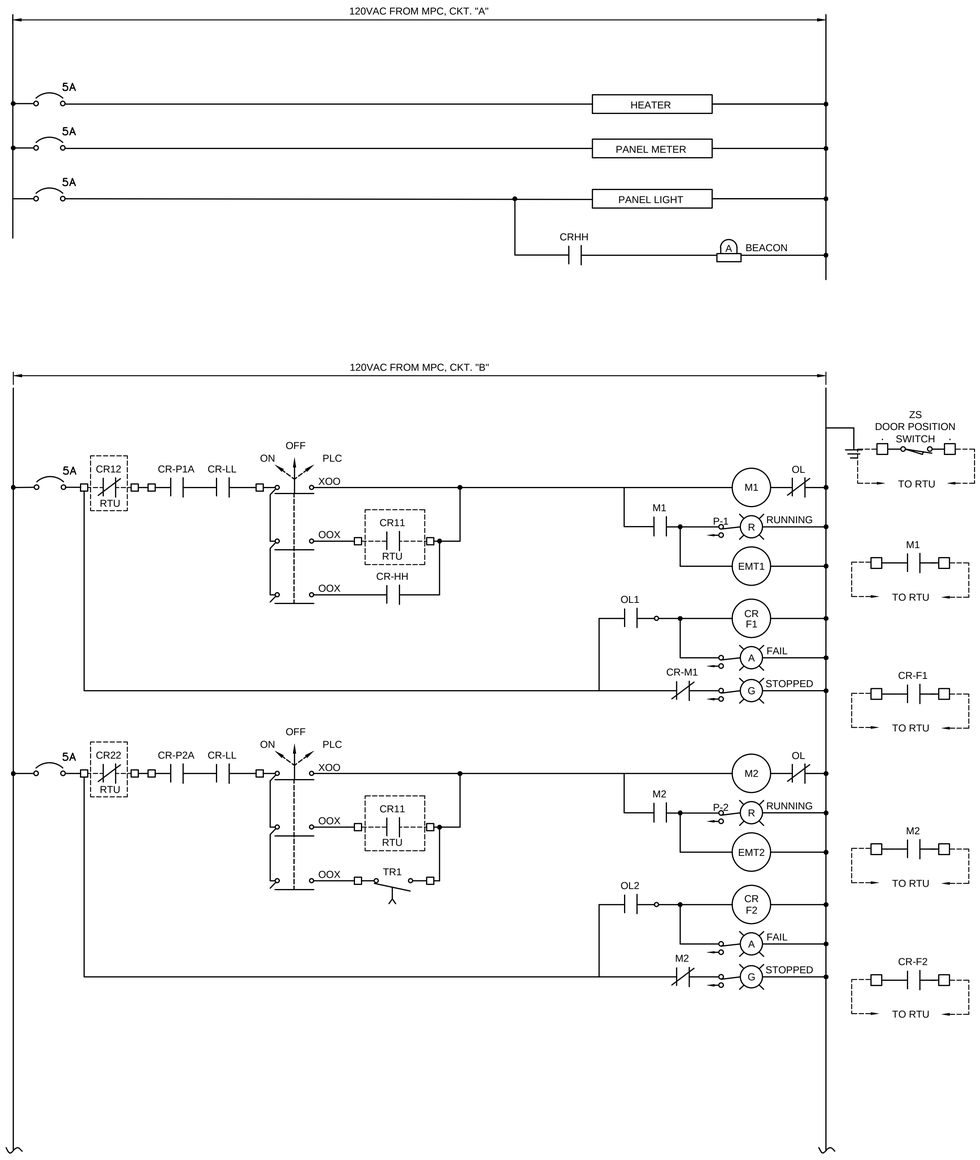

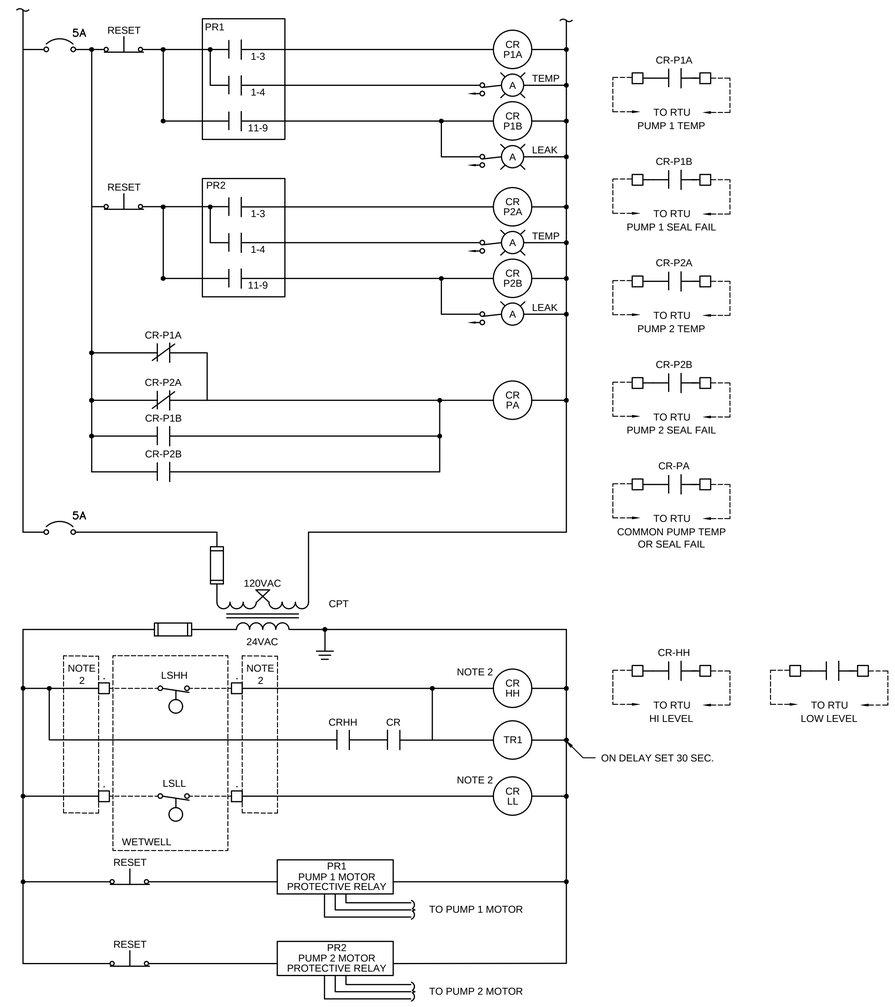

GENERAL NOTES:

1. PR1 AND PR2 ARE PUMP MOTOR TEMPERATURE AND SEAL LEAK DETECTION RELAYS PROVIDED WITH THE PUMPS. BARNES PUMP MONITOR RELAYS ARE SHOWN. PROVIDE RELAYS AND ADJUST DIAGRAM AS REQUIRED FOR PUMPS SUPPLIED AT LIFT STATION.
2. PROVIDE INTRINSICALLY SAFE RELAY BARRIERS FOR FLOAT SWITCH WIRES.

CONTROL PANEL WIRING DIAGRAM

SCALE: NONE

Revision Number	Revision Description	Drawn By	Checked By	Date

Filename
Project No.
Project Date

CITIZENS WESTFIELD

CONSTANT SPEED SUBMERSIBLE LIFT STATION

STANDARD INSTRUMENTATION & CONTROL DETAILS

SHEET NO.

IC-2

Drawing name: \\ndw00289\Projects\62600_CEG_Westfield_WWTF\SOW 1 - On-Call\CWF Master LS Specs and Drawings\SHT IC-2.dwg
Dec 14, 2018 - 2:37pm

(#) KEYED NOTES:

1. INSTALL 3-INCH ALUMINUM PIPE FOR RADIO ANTENNA MOUNTING IN CONCRETE BASE. COAT PIPE IN CONTACT WITH CONCRETE WITH BITUMINOUS COATING UP TO 4 INCHES ABOVE TOP OF BASE. CAP TOP OF PIPE.
2. CONCRETE BASE. SEE DETAIL
3. PREFORM FIELD RADIO TESTING TO VERIFY HEIGHT REQUIRED.

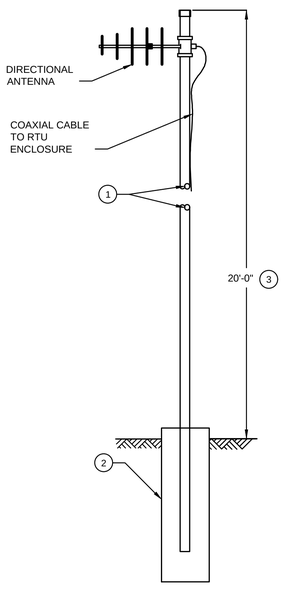

DIRECTIONAL ANTENNA DETAIL

SCALE: NONE

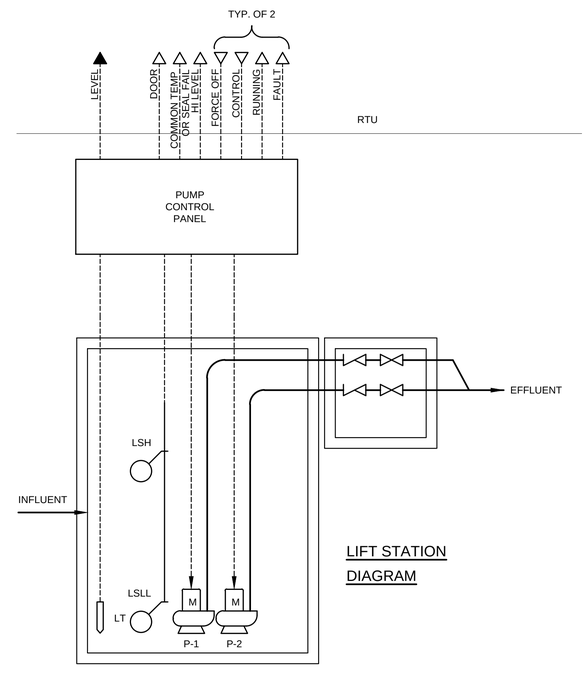

LIFT STATION DIAGRAM

PROCESS & INSTRUMENTATION DIAGRAM

SCALE: NONE

Revision Number	Revision Description	Drawn By	Checked By	Date

Filename

Project No.

Project Date

CITIZENS WESTFIELD

CONSTANT SPEED SUBMERSIBLE LIFT STATION

STANDARD INSTRUMENTATION & CONTROL DETAILS

SHEET NO.

IC-3

Drawing name: \\indw00\289Projects\62600_CEG_Westfield_WWTF\SOW 1 - On-Call\CWF Master LS Specs and Drawings\SHT IC-3.dwg
Dec 14, 2018 - 2:37pm

KEYED NOTES:

1. PROVIDE 4" PVC CONDUIT OR AS REQUIRED BY ELECTRICAL UTILITY FOR INCOMING PRIMARY SERVICE FEEDERS. EXTEND NOMINAL 10 FEET OUT FROM PAD OR AS SHOWN ON THE SITE PLAN. PRIMARY SERVICE CONDUCTORS FURNISHED AND INSTALLED BY UTILITY.
2. PROVIDE TRANSFORMER PAD PER UTILITY REQUIREMENTS. NEW PAD-MOUNTED UTILITY TRANSFORMER 12470-480Y/277 VOLTS, 3 PHASE SECONDARY PROVIDED BY UTILITY.
3. CURRENT AND POTENTIAL TRANSFORMERS PROVIDED BY UTILITY INSIDE OF TRANSFORMER COMPARTMENT.
4. METER BASE FURNISHED BY UTILITY INSTALLED BY ELECTRICAL CONTRACTOR. METER PROVIDED BY UTILITY.
5. PROVIDE 1" CONDUIT WITH PULL WIRE FOR METERING CONDUCTORS BY UTILITY.
6. PROVIDE COUNTERPOISE GROUNDING RING AROUND TRANSFORMER PAD. SEE PLAN SHEET FOR REQUIREMENTS.
7. 2" CONDUIT, 3 #2, 1 #6 NEUTRAL SERVICE CONDUCTORS.
8. SERVICE ENTRANCE RATED DOUBLE THROW MANUAL TRANSFER SWITCH. SWITCH SHALL BE FUSED TYPE, 480 VOLTS, 3 PHASE, 100 AMPS WITH NEUTRAL LUGS. ENCLOSURE SHALL BE STAINLESS STEEL NEMA 3R. SWITCH SHALL HAVE CENTER OFF POSITION. RATED 18,000 A.I.C. MINIMUM.
9. 2" CONDUIT, 3 #2, 1 #6 GROUND SERVICE CONDUCTORS.
10. PORTABLE GENERATOR CONNECTION PLUG:

Voltage	Meltric Model Number		
	Receptacle	Angle Box	Dust Cap
480 V	37-98043	39-9A053-080-212	31-9A126
230 V	37-28073	39-2A053-080-212	35-2A126

11. 1" PVC CONDUIT WITH 1 #6 GROUNDING ELECTRODE CONDUCTOR TO GROUND ROD OR AS NOTED ON PLAN SHEETS.
12. PUMP CONTROL PANEL WITH STARTERS, PILOT AND CONTROL DEVICES, ETC. AS REQUIRED PER DIVISION 11 SPECIFICATIONS.
13. 3/4" CONDUIT, 3 #10, 1 #12 GROUND.
14. 3/4" CONDUIT, 2 #8, 1 #10 GROUND.
15. SURGE PROTECTION DEVICE PER SPECIFICATIONS.
16. MINI-POWER-CENTER, CONSISTING OF A PRIMARY CIRCUIT BREAKER, DRY-TYPE TRANSFORMER, A SECONDARY CIRCUIT BREAKER, AND A SMALL PANELBOARD. REFER TO PANEL SCHEDULES FOR REQUIREMENTS. GROUND THE TRANSFORMER SECONDARY AS A SEPARATELY DERIVED SYSTEM PER NEC REQUIREMENTS.
17. 3/4" CONDUIT, 4 #12, 1 #12 GROUND.
18. MULTI-CONDUCTOR POWER AND CONTROL SUBMERSIBLE CABLE PROVIDED WITH PUMP.

ASSUMPTIONS

DETAILS APPLY TO A DUPLEX PUMP STATION, MAXIMUM 25 HP EACH OPERATING AT 460 VOLTS, 3 PHASE. PUMPS OPERATE AT CONSTANT SPEED WITH INTERLOCKS TO PREVENT SIMULTANEOUS STARTING.

UNDERGROUND SERVICE TO A SMALL PAD MOUNTED TRANSFORMER BY ELECTRICAL UTILITY.

** *TO BE DETERMINED BASED ON PROJECT REQUIREMENTS.*

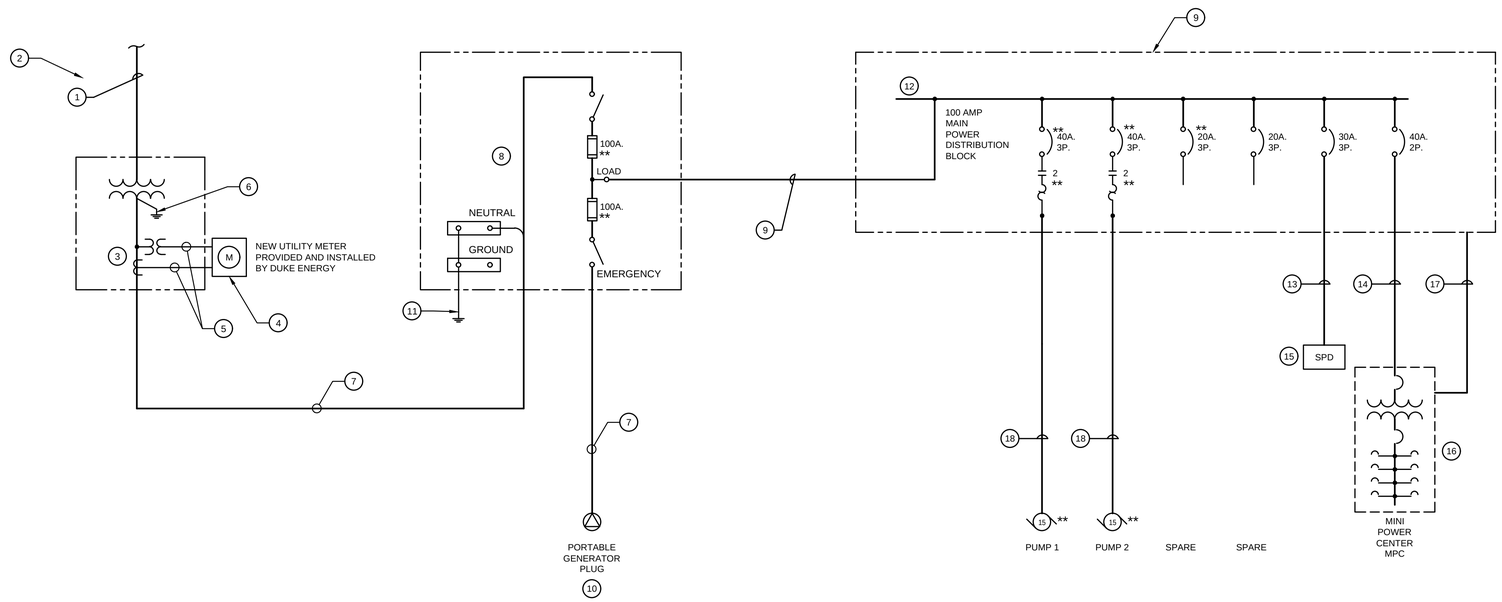

ONE-LINE DIAGRAM

SCALE: NTS

MINI-POWER-CENTER SCHEDULE

DESIGNATION: PANEL "MPC"
LOCATION: _____ LIFT STATION
VOLTAGE: 120/240 VOLT
PHASE: 1 PHASE, 3 WIRE

MAINS: 60 AMP MAIN CIRCUIT BREAKER
BUS SIZE: 60 AMP
PANEL MOUNTING: PART OF MINI-POWER-CENTER "MPC"
ALL BREAKERS: 10,000 A.I.C. (MINIMUM)

CKT. NO.	LOAD DESCRIPTION	#	KVA	CKT. BKR. AMPS	CKT. BKR. POLE	KVA A	KVA B	CKT. BKR. AMPS	CKT. BKR. POLE	KVA	#	LOAD DESCRIPTION	CKT. NO.
1	MAIN BREAKER			60	2	0.20		20	1	0.20	1	PUMP CONTROL PANEL	2
3	"			--	--		1.00	20	1	1.00	1	PUMP CONTROL PANEL HEATER & LIGHT	4
5	GFCI DUPLEX RECEPTACLE	1	0.18	20	1	0.68		20	1	0.50	1	RTU / TELEMETRY PANEL	6
7	PORTABLE GENERATOR HEATER (if needed)	5	1.20	30	2		1.70	20	1	0.50	1	SITE LIGHTING (IF USED)	8
9	"		1.20	--	--	1.70		20	1	0.50	1	PORTABLE GEN. BATTERY CHARGER (if used)	10
11	SPARE BREAKER			20	1		0.00	20	1			SPARE BREAKER	12
13	SPARE BREAKER			20	1	0.00		20	1			SPARE BREAKER	14
15	SPARE BREAKER			20	1		0.00	20	1			SPARE BREAKER	16
17	SPARE BREAKER			20	1	0.00		20	1			SPARE BREAKER	18
	TOTAL CONNECTED LOAD:					2.58	2.70	TOTAL =		5.28	KVA		

1 = 3/4" CONDUIT WITH 2 #12 CONDUCTORS AND 1 #12 GROUND CONDUCTOR.
5 = 3/4" CONDUIT WITH 3 #10 CONDUCTORS AND 1 #10 GROUND CONDUCTOR.

THIS PANEL IS A PART OF A MINI-POWER-CENTER, CONSISTING OF A 40A PRIMARY BREAKER, A 10 KVA, 1 PHASE, 480-120/240 VOLT TRANSFORMER, A 60A SECONDARY MAIN BREAKER, AND A SMALL PANELBOARD WITH COPPER BUS AND BOLT-ON BREAKERS. ALL IN A 316 STAINLESS STEEL NEMA 3R ENCLOSURE.
SQUARE D CAT. NO. MPZB10S40FSS, OR EATON/ CUTLER-HAMMER CAT. NO. P46G11S10S6CUB, OR EQUAL.

Revision Number	Revision Description	Drawn By	Checked By	Date

Filename
Project No.
Project Date

CITIZENS WESTFIELD
CONSTANT SPEED SUBMERSIBLE LIFT STATION
STANDARD ELECTRICAL DETAILS

SHEET NO.
E-1

Drawing name: \\rdvfs00\299\projects\62600_CEG_Westfield_WWTF\SOW 1 - On-Call\OVF Master LS Specs and Drawings\Std_E-1.dwg
Dec 14, 2018 - 2:37pm

(#) KEYED NOTES:

1. ELECTRICAL SERVICE CONDUCTORS TO BE INSTALLED BY ELECTRIC UTILITY. SERVICE SHALL BE 480/277 VOLTS, 3-PHASE, 4-WIRE, 60 HZ.
2. PROVIDE EMPTY 4-INCH SCHEDULE 80 PVC CONDUITS FROM CT CABINET TO EDGE OF SITE.
3. CT CABINET FURNISHED BY ELECTRIC UTILITY, INSTALLED BY CONTRACTOR USING STAINLESS STEEL HARDWARE.
4. METER SOCKET FURNISHED BY ELECTRIC UTILITY, INSTALLED BY CONTRACTOR USING STAINLESS STEEL HARDWARE. INSTALL CENTER OF METER AT 5'-0" ABOVE GRADE.
5. PROVIDE EMPTY 1 INCH PVC-COATED RIGID STEEL CONDUIT NIPPLE FOR METERING CABLES. CABLES PROVIDED AND INSTALLED BY ELECTRIC UTILITY.
6. PVC-COATED RIGID STEEL CONDUIT WITH SERVICE ENTRANCE CONDUCTORS.
7. NOT USED
8. PVC CONDUIT WITH GROUNDING CONDUCTOR.
9. 3/4" X 10' COPPER GROUND ROD. BOND GROUNDING CONDUCTOR TO ROD USING BURNDY HYGROUND CONNECTOR.
10. MANUAL TRANSFER SWITCH. INSTALL USING STAINLESS STEEL HARDWARE.
11. STANDBY GENERATOR RECEPTACLE TO BE 480V:

	Meltric Model Number		
Voltage	Receptacle	Angle Box	Dust Cap
480 V	37-98043	39-9A053-080-212	31-9A126
230 V	37-28073	39-2A053-080-212	35-2A126

12. MATCH CITIZENS WESTFIELD PORTABLE GENERATOR.
13. PVC-COATED RIGID STEEL CONDUIT WITH 3 #2 AWG AND 1 #6 GROUND. TO ELECTRICAL DISTRIBUTION PANEL.

GENERAL NOTES:

A. THE AREA AROUND THE LIFT STATION SHALL BE CLASSIFIED AS A HAZARDOUS LOCATION. ANY SPACE WITHIN 3' (ANY DIRECTION) FROM A VENT IS CLASSIFIED AS CLASS I, DIVISION 1, GROUPS C & D; WITH THE SPACE FROM 3' TO 5' FROM A VENT CLASSIFIED AS CLASS I, DIVISION 2, GROUPS C & D. IN ADDITION, ANY SPACES EXTENDING OUTWARD 3' PAST THE EDGE OF ANY HATCH OPENINGS IN THE TOP OF THE STRUCTURE, TO A HEIGHT OF 18", SHALL BE CLASSIFIED AS CLASS I, DIVISION 2, GROUPS C & D. ALL ELECTRICAL WORK MUST CONFORM WITH THE N.E.C. REQUIREMENTS FOR THESE AREAS. EXPLOSION-PROOF CONDUIT SEALS MUST BE INSTALLED WHEREVER THE CONDUITS PASS THROUGH THE BOUNDARIES OF THE HAZARDOUS LOCATION.

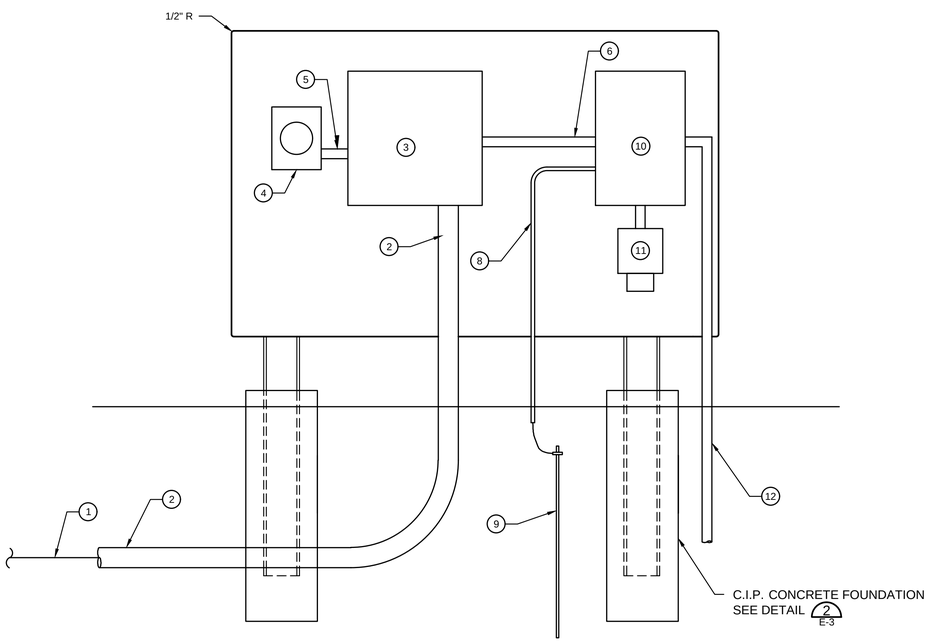

LIFT STATION ELECTRICAL SERVICE PANEL INSTALLATION DETAIL 1
SCALE: NONE

(#) KEYED NOTES:

1. CONCRETE BASE. REFER TO LS-1.
2. ALUMINUM CHANNEL MOUNTED TO CONCRETE BASE. SEE DETAIL ON LS-2.
3. ALUMINUM EQUIPMENT MOUNTING PLATE, SIZED AS REQUIRED TO ACCOMMODATE ALL EQUIPMENT. WELD PLATE TO CHANNELS. ROUND ALL CORNERS TO 0.5 INCH RADIUS. FILE ALL SHARP EDGES.
4. PUMP CONTROL PANEL. SEE PANEL LAYOUT ON E-3.
5. ELECTRICAL SERVICE CONDUIT FROM TRANSFER SWITCH AS INDICATED ON ONE LINE DIAGRAM. BURY MINIMUM 24 INCHES BELOW GRADE.
6. 3/4" CONDUIT, 2 #18 TSP CABLES (INCLUDES SPARES).
7. PROVIDE INSULATED BUSHING AT CABLE ENTRY TO PANEL. TERMINATE CABLES IN PANEL. PROVIDE 12" CABLE SLACK WITHIN THE CABLE GUARD (TYPICAL OF ALL CABLES CONNECTING FROM WET WELL).
8. PROVIDE A 2 INCH CONDUIT FOR EACH LIFT CABLE ROUTED INTO LIFT STATION AS INDICATED ON PLAN SHEET. INCLUDE ONE FOR FUTURE USE.
9. SEAL CONDUITS WITH DUCT SEAL (TYPICAL OF ALL CONDUITS FROM WET WELL).
10. PROVIDE 3/4" CONDUIT WITH 24 #16 CONTROL WIRES (INCLUDES SPARES) FOR LIFT CONTROL AND MONITORING FROM RTU PANEL.
11. RTU CONTROL PANEL AS INDICATED ON DETAIL.
12. PROVIDE RED ALARM LIGHT PER SPECIFICATIONS.
13. PROVIDE 1" CONDUIT INTO LIFT STATION FOR LEVEL SENSOR CABLE.
14. PROVIDE 2" CONDUIT INTO LIFT STATION FOR LEVEL (FLOAT) SWITCH CABLES.
15. CABLE GUARD BELOW PANEL SIZED AS REQUIRED. SEE DETAIL.
16. PROVIDE 1 1/2" CONDUIT FROM RTU PANEL TO ANTENNA POLE LOCATION.
17. MINI POWER CENTER SEE SHEET E-1.
18. DUPLEX GFI RECEPTICAL WITH RAINTIGHT COVER.

GENERAL NOTES:

A. THE AREA AROUND THE LIFT STATION SHALL BE CLASSIFIED AS A HAZARDOUS LOCATION. ANY SPACE WITHIN 3' (ANY DIRECTION) FROM A VENT IS CLASSIFIED AS CLASS I, DIVISION 1, GROUPS C & D; WITH THE SPACE FROM 3' TO 5' FROM A VENT CLASSIFIED AS CLASS I, DIVISION 2, GROUPS C & D. IN ADDITION, ANY SPACES EXTENDING OUTWARD 3' PAST THE EDGE OF ANY HATCH OPENINGS IN THE TOP OF THE STRUCTURE, TO A HEIGHT OF 18", SHALL BE CLASSIFIED AS CLASS I, DIVISION 2, GROUPS C & D. ALL ELECTRICAL WORK MUST CONFORM WITH THE N.E.C. REQUIREMENTS FOR THESE AREAS.

B. REFER TO ELECTRICAL ONELINE DIAGRAM AND DETAILS ON SHEET E-1 FOR POWER AND CONTROL CONDUIT AND WIRING BETWEEN EQUIPMENT SHOWN.

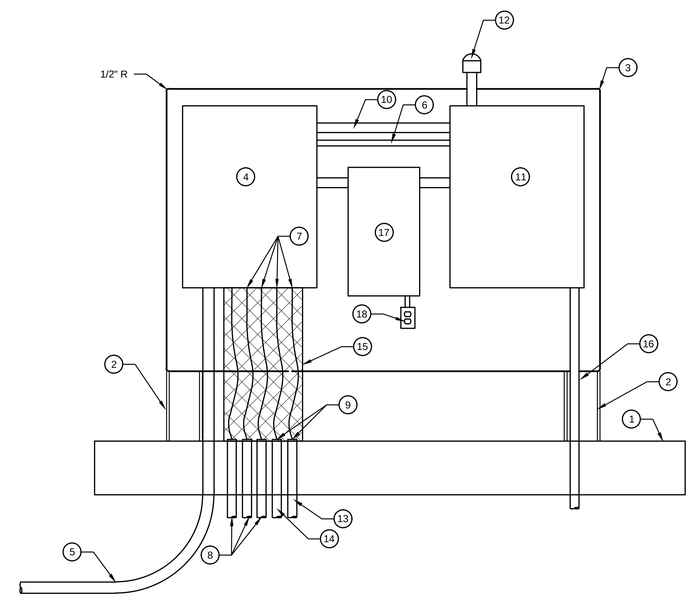

LIFT STATION ELECTRICAL PANELS INSTALLATION DETAIL
SCALE: NONE

Revision Number	Revision Description	Drawn By	Checked By	Date

Filename	
Project No.	
Project Date	

CITIZENS WESTFIELD

CONSTANT SPEED SUBMERSIBLE LIFT STATION

STANDARD ELECTRICAL DETAILS

SHEET NO.

E-2

Drawing name: \\rdvfs00\209\Projects\62600_CEG_Westfield_WWTF\SOW 1 - On-Call\CWF Master LS Specs and Drawings\SH_E-2.DWG
Dec 14, 2018 - 2:37pm

#	DESCRIPTION
1.	ENCLOSURE SUB-PANEL, SIZED AS REQUIRED TO PROVIDE MOUNTING SPACE. LEAVE SUFFICIENT CLEARANCE ON SIDES AND BOTTOM FOR CONDUITS AND CABLE ENTRIES.
2.	NON-METALLIC SLOTTED WIREWAY SIZED PER SPECIFICATIONS.
3.	POWER DISTRIBUTION BLOCKS, 3 POLE TYPE, SHALL ACCEPT ONE (1) OR TWO (2) CABLES ON THE LINE SIDE FROM #4 TO #250 KCMIL MINIMUM, AND A MINIMUM OF 8 CONDUCTORS ON THE LOAD SIDE FROM #14 TO #4.
4.	480 VOLT 3 PHASE SURGE PROTECTION DEVICES FOR PANEL.
5.	PHASE MONITOR RELAY PER SPECIFICATIONS
6.	PROVIDE CIRCUIT BREAKER OR MOTOR CIRCUIT PROTECTOR FOR EACH PUMP, SIZED AS REQUIRED.
7.	SPACE FOR FUTURE THIRD CIRCUIT BREAKER / MOTOR CIRCUIT PROTECTOR AND MOTOR STARTER IF REQUIRED BY SPECIFICATIONS.
8.	NEMA RATED STARTERS FOR EACH PUMP.
9.	120 VOLT CIRCUIT BREAKERS / FUSE BLOCKS AS REQUIRED FOR CONTROL CIRCUITS.
10.	NOMINAL 50 VA OR AS REQUIRED 120 / 24 VOLT CPT FOR INTRINSIC SAFETY CIRCUITS AND PROTECTORS.
11.	INTRINSIC SAFETY RELAYS FOR LEVEL (FLOAT) SWITCHES AS REQUIRED.
12.	PANEL GROUND BUS BAR BONDED TO SUB-PANEL.
13.	CONTROL PANEL HEATER SIZED AS REQUIRED WITH CLEARANCES AROUND UNIT TO PREVENT DAMAGE TO OTHER COMPONENTS.
14.	TERMINAL BLOCKS AS REQUIRED FOR ALL EXTERNAL WIRING
15.	PUMP THERMAL / MOISTURE PROTECTION RELAYS. PROVIDE SPACE FOR FUTURE THIRD RELAY.
16.	PROVIDE INTERPOSING RELAYS AS REQUIRED FOR INTERFACING RTU WITH PUMP CONTROL PANEL EQUIPMENT.
17.	ALARM BEACON LIGHT PER SPECIFICATIONS
18.	NEMA 4X STAINLESS STEEL ENCLOSURE WITH DRIP SHIELD, SIZE AS REQURIED.
19.	DUAL HI/LO THERMOSTAT FOR PANEL TEMPERATURE MONITORING
20.	ENCLOSURE DOOR SWITCH
21.	PANEL LIGHT AS SPECIFIED.

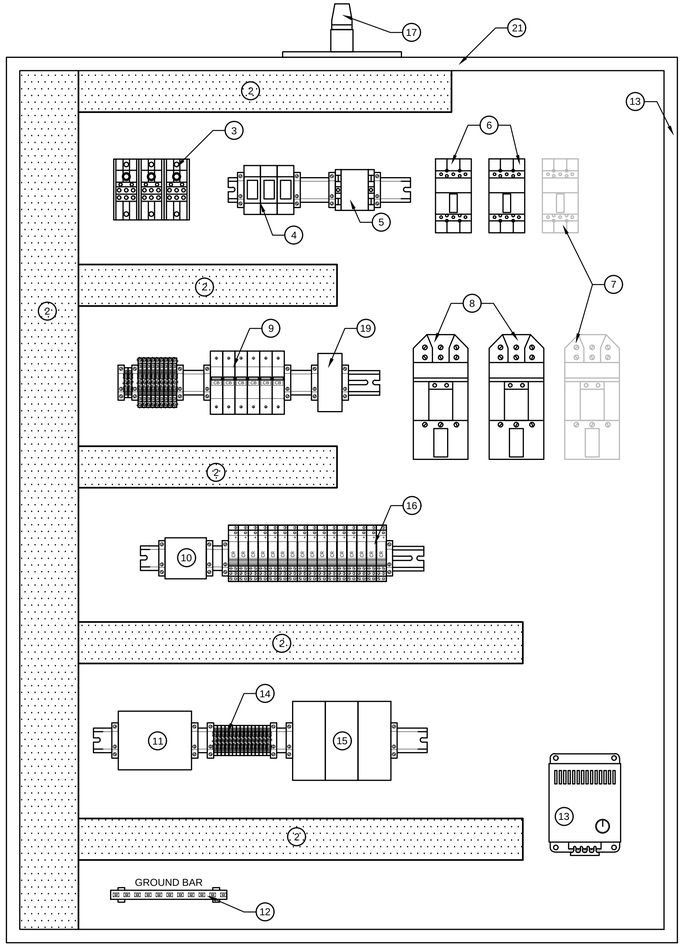

PUMP CONTROL PANEL LAYOUT

SCALE: 3" = 1'-0"

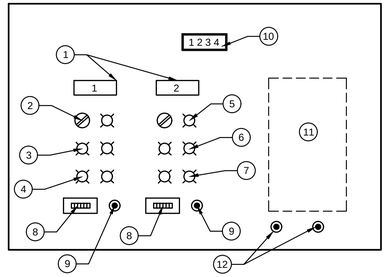

#	DESCRIPTION
1.	NAMEPLATES, 'LIFT 1' AND 'LIFT 2' AS INDICATED
2.	PUMP 'ON-OFF-AUTO' SELECTOR SWITCH
3.	PUMP 'RUNNING' PUSH-TO-TEST PILOT LIGHT
4.	PUMP 'STOPPED' PUSH-TO-TEST PILOT LIGHT
5.	PUMP 'FAIL' PUSH-TO-TEST PILOT LIGHT
6.	PUMP 'TEMP' PUSH-TO-TEST PILOT LIGHT
7.	PUMP 'LEAK' PUSH-TO-TEST PILOT LIGHT
8.	ELAPSED TIME METER
9.	PUMP 'RESET' PUSH BUTTON
10.	LIFT STATION LEVEL METER.
11.	LOCATION FOR FUTURE PUMP DEVICES.
12.	STARTR OVERLOAD RESET BUTTON.

PARTIAL LAYOUT INNER DOOR DEVICES PUMP CONTROL PANEL

SCALE: NONE

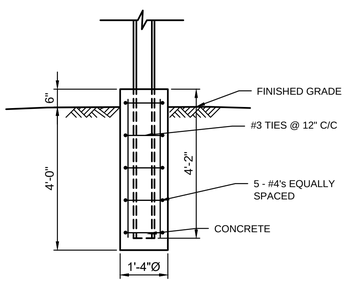

SUPPORT DETAIL

SCALE: 1/2" = 1'-0"

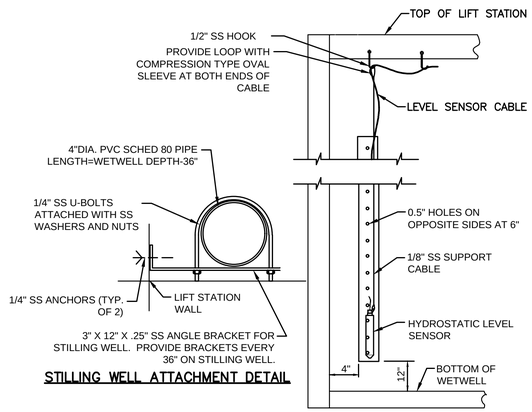

LEVEL SENSOR MOUNTING DETAIL

SCALE: NONE

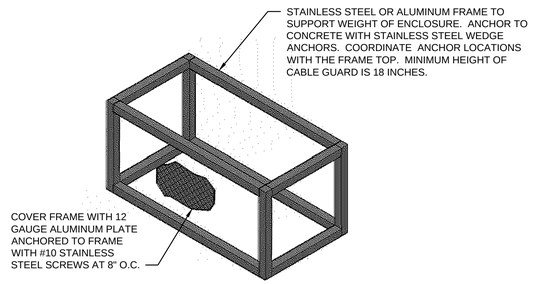

NOTES:
1. PROVIDE (2) 3"x12" OVAL HOLES (1 EACH FRONT AND BACK) COVER HOLES WITH HEAVY GUAGE EXPANDED ALUMINUM MESH TACK WELDED TO INSIDE OF ALUMINUM PLATE.
2. DIMENSIONS TO SUIT PANEL SIZE AND LOCATION

CABLE GUARD DETAIL

SCALE: NONE

Revision Number	Revision Description	Drawn By	Checked By	Date

Filename	
Project No.	
Project Date	

CITIZENS WESTFIELD

CONSTANT SPEED SUBMERSIBLE LIFT STATION

STANDARD ELECTRICAL DETAILS

SHEET NO.

E-3

Drawing name: \\cdw0028\Projects\62600_CEG_Westfield_WWTF\SOW 1 - On-Call\CWF Master LS Specs and Drawings\SH_E-3.DWG
Dec 14, 2018 - 2:37pm

NOTES:

1. LIFT STATION AND VALVE VAULT TO BE CONSTRUCTED ON SPECIAL BACKFILL.
2. INSTALL RETRACTABLE SAFETY POST ON ALUMINUM LADDERS, MODEL 1 BILCO LADDER UP OR EQUAL.
3. ALL INTERIOR PIPING SHALL BE COATED. AS REQUIRED IN CITIZENS SANITARY STANDARDS MANUAL
4. INSTALL A "RED VALVE" PRESSURE SENSOR SERIES 40 ON FORCE MAIN. PLACE AN ASHCROFT TYPE NO. 1009 STN. STL. 4 1/2" PRESSURE GAUGE & VALVE ON THE PRESSURE SENSOR. THE GAUGE SHALL HAVE A SHUT OFF VALVE AND A RANGE OF 0-75 PSIG.
5. ALL FASTENERS TO BE 316 S.S.
6. CORE DRILL HOLE AND SEAL ANNULAR OPENING w/ CASING SEAL OR LINK SEAL.

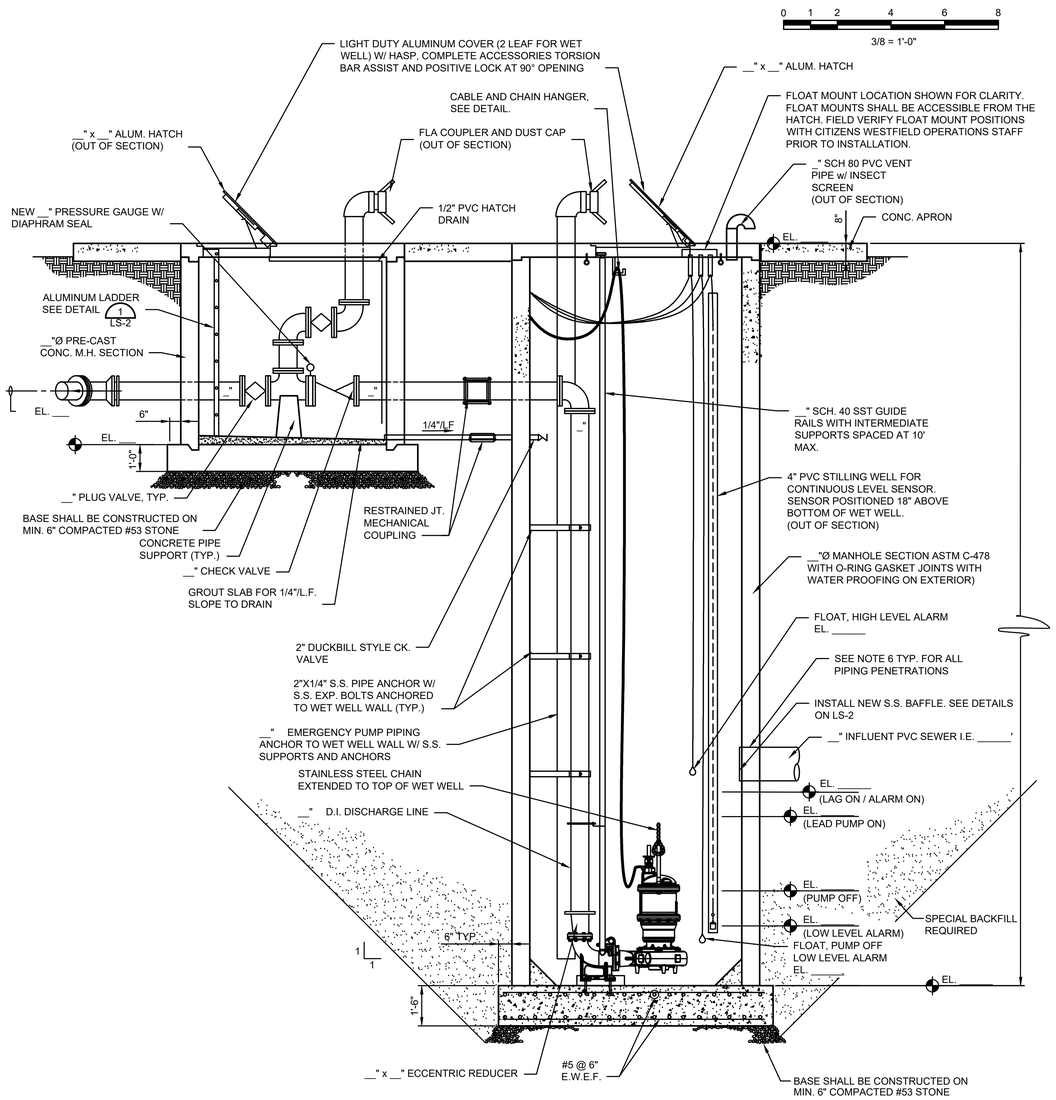

SECTION
SCALE: 3/8"=1'-0"

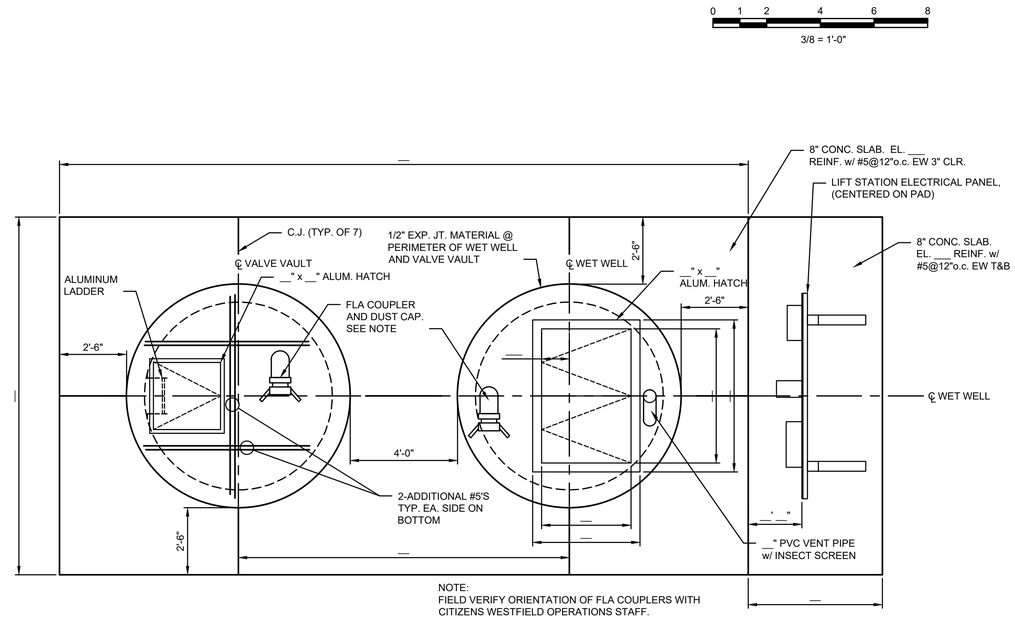

TOP PLAN
SCALE: 3/8"=1'-0"

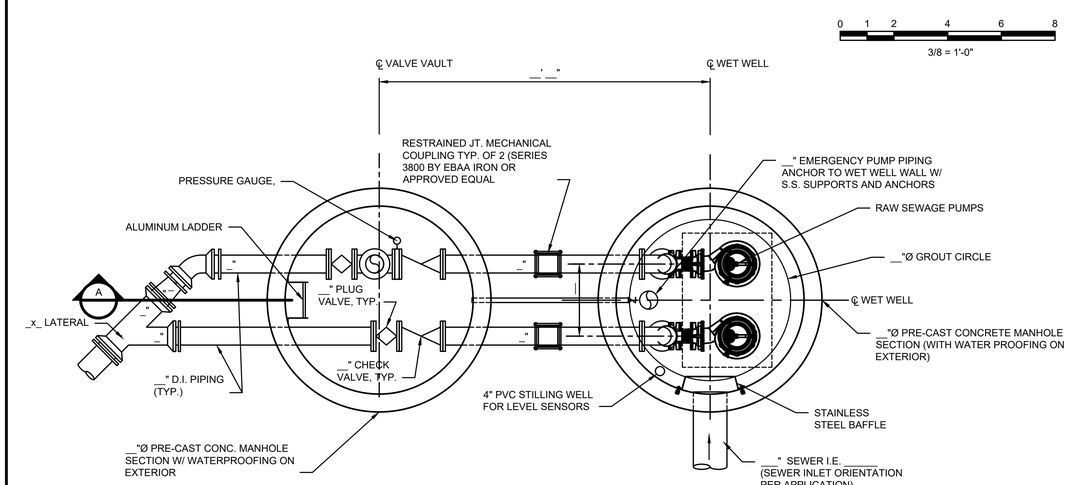

LOWER LEVEL PLAN
SCALE: 3/8"=1'-0"

Revision Number	Revision Description	Drawn By	Checked By	Date

Filename	
Project No.	
Project Date	

CITIZENS WESTFIELD

CONSTANT SPEED SUBMERSIBLE LIFT STATION

STANDARD DETAILS

SHEET NO.

LS-1

NOTES:

1. MATERIAL SHALL BE ALUMINUM (6061-T6 ALLOY).
2. FINAL DESIGN BY LADDER MANUFACTURER.

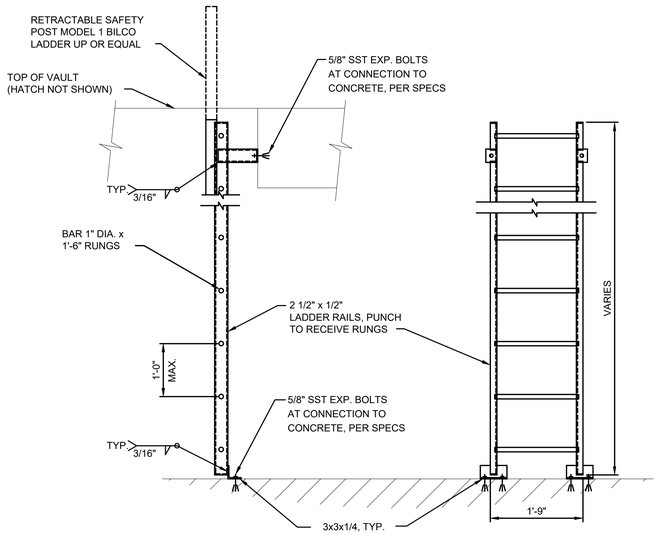

SECTION
SCALE: NTS

ELEVATION
SCALE: NTS

LADDER DETAIL 1
SCALE: NTS

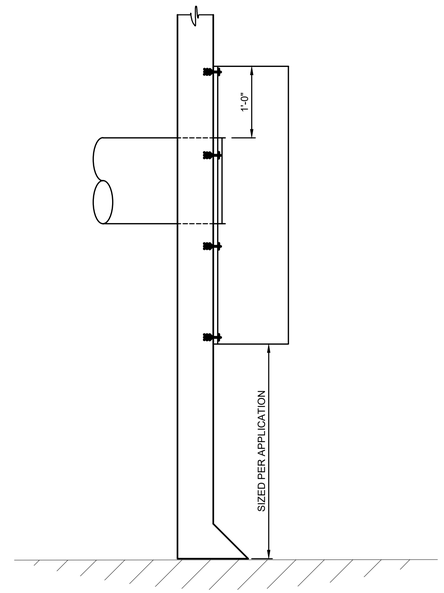

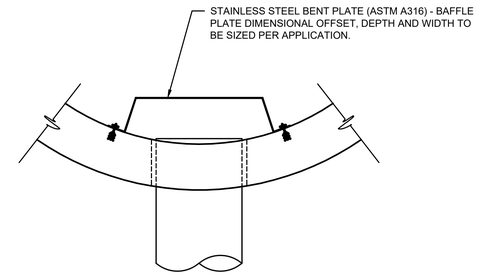

STAINLESS STEEL BAFFLE DETAIL 2
SCALE: NTS

NOTES:

1. ANY CONTACT BETWEEN ALUMINUM AND STAINLESS STEEL REQUIRES PLASTIC SPACER WASHERS.
2. ANY CONTACT BETWEEN ALUMINUM AND CONCRETE REQUIRES A MASTIC COATING OR OTHER ACCEPTABLE COATING/SPACER

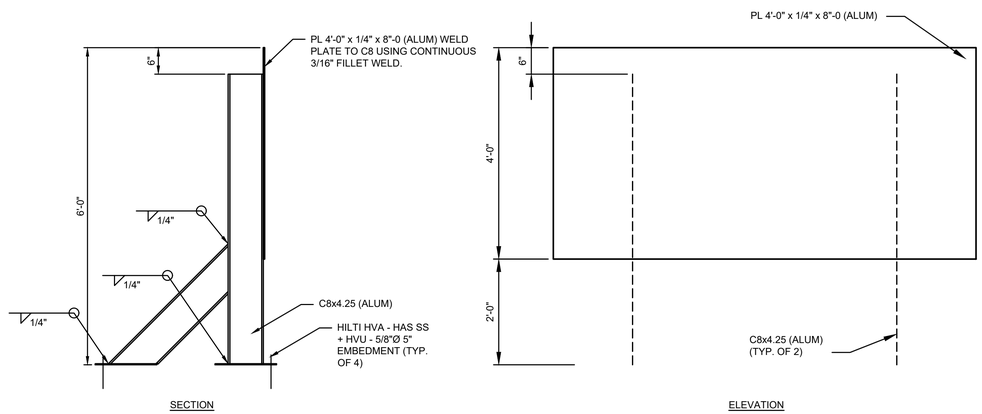

SECTION

ELEVATION

EQUIPMENT MOUNTING PLATE DETAIL 3
SCALE: NTS

Revision Number	Revision Description	Drawn By	Checked By	Date

Filename	
Project No.	
Project Date	

CITIZENS WESTFIELD

CONSTANT SPEED SUBMERSIBLE LIFT STATION

STANDARD DETAILS

SHEET NO.

LS-2

CITIZENS ENERGY GROUP

LOW PRESSURE SYSTEM DETAIL

FIGURE 500.02

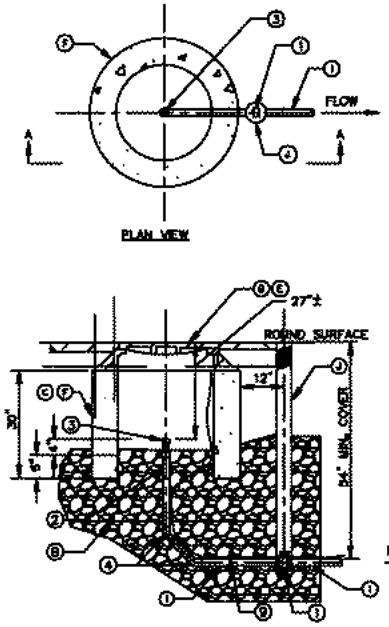

NOTES:
1. STONE TO BE COMPACTED AND BROUGHT UP INSIDE THE PIT TO THE UNDERSIDE OF THE CAM-LOCK SUCH THAT IT DOES NOT INTERFERE WITH OPERATION BUT PROVIDES SUPPORT FOR THE RISER.
2. CENTER THE FLUSHING RISER WITHIN THE PIT.
3. ALL PIPE AND FITTINGS ARE 2" DIA. UNLESS NOTED OTHERWISE.
4. THE EXTERIOR VALVE AND VALVE BOX (AND PIPING TO THE LATERAL WYE FOR OFF-LINE ASSEMBLES) ARE CONSIDERED PART OF THE FLUSHING ASSEMBLY.
5. 24" DIA. HDPE PIPE AND PIT COVER BY STAR PRODUCTS TO BE USED IF LOCATED GREATER THAN 5' OUTSIDE THE ROADWAY OR OTHERWISE APPROVED.

FLUSHING ASSEMBLY
(TERMINAL END OR OFF-LINE)
N.T.S.

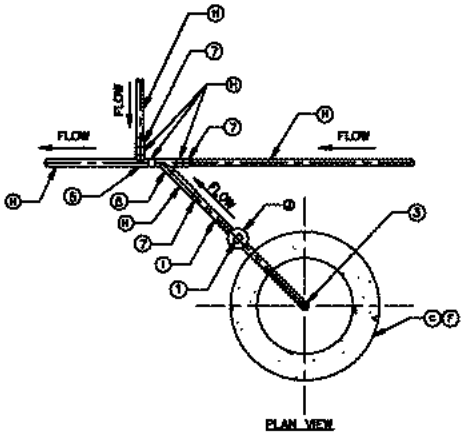

TEE WITH OFF-LINE
FLUSHING ASSEMBLY
N.T.S.

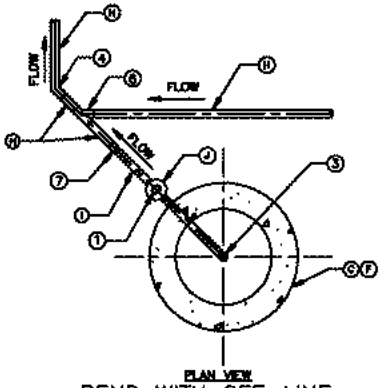

BEND WITH OFF-LINE
FLUSHING ASSEMBLY
N.T.S.

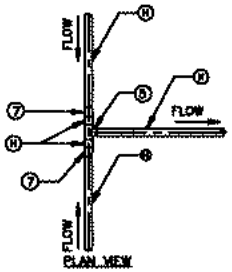

TEE, BRANCH FLOW OUT
N.T.S.

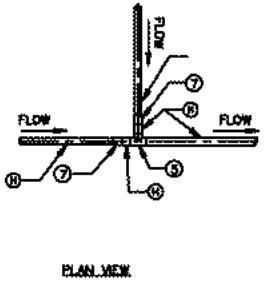

TEE, BRANCH FLOW IN
N.T.S.

REDUCER
N.T.S.

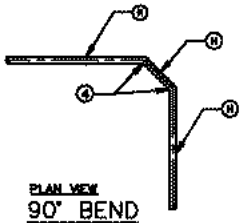

90° BEND
N.T.S.

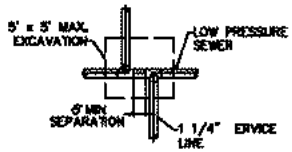

LOW PRESSURE SEWER SERVICE LINE
CONNECTION DETAIL
N.T.S.

MATERIAL NOTES

1. 2" POLYETHYLENE SHUT-OFF BALL VALVE (FULLY PORTED)
2. 2" TRANSITION FITTING FROM HDPE TO STAINLESS STEEL (MALE THREADS)
3. 2" MALE CAM-LOCK W/ CAP (FEMALE THREADS)
4. 45° ELBOW (SIZE VARIES)
5. NON-REDUCING BRANCH TEES (SIZE VARIES)
6. LATERAL WYE (SIZE VARIES)
7. REDUCER, IF APPLICABLE (SIZE VARIES)
8. #8 COMPACTED CRUSHED STONE, MIN. 6" UNDER BOTTOM OF STRUCTURE AND PIPE
9. TRACER WIRE
10. 4" PVC PIPE, 18" LENGTH

A. ELECTROFUSION PUNCH TEE WITH 1-1/4" BUTT FUSION.
B. 1-1/4" LOW PRESSURE SEWER LATERAL PIPE
C. 24" DIA. HDPE FOR PIT (OPEN BOTTOM)
D. LATERAL ASSEMBLY (PRE-ASSEMBLED, INCLUDES STAINLESS STEEL VALVE CURB STOP AND INTEGRAL CHECK VALVE WITH POLYPROPYLENE COMPRESSION ADAPTOR FITTINGS AT EACH END)
E. PIT COVER (WITH "SEWER" STAMPED INTO SURFACE) BY STAR PRODUCTS #SP-V32026SEWER
F. 24" DIA. PRECAST RCP FOR PIT (OPEN BOTTOM)
G. NEENAH R-1772 FRAME & SOLID LID WITH 2 CONCEALED PICKHOLES AND SELF SEALING GASKET WITH "SANITARY SEWER" STAMPED INTO SURFACE
H. MAINLINE LOW PRESSURE SEWER PIPE (SIZE VARIES)
I. 2" LOW PRESSURE SEWER PIPE
J. 4-1/4" CAST IRON ROADWAY VALVE BOX AND COVER (WITH "SEWER" STAMPED INTO SURFACE) SUITABLE FOR HIGHWAY LOADING

GENERAL NOTES

1. ALL MATERIALS AND INSTALLATION IS TO CONFORM TO THE REQUIREMENTS INCLUDED IN THE TECHNICAL SPECIFICATIONS.
2. ALL PIPE AND FITTINGS ARE TO BE HDPE, MINIMUM DR 11, SIZED IN ACCORDANCE WITH IPS, PRESSURE RATING OF 160 PSI OR GREATER, UNLESS OTHERWISE NOTED.
3. FITTINGS MAY BE FABRICATED OR MOLDED.
4. JOINING OF FITTINGS MAY BE ACCOMPLISHED VIA BUTT FUSION OR ELECTROFUSION EXCEPT WHERE COMPRESSION FITTINGS ARE INDICATED.
5. LIMITED USE OF ELECTROFUSION COUPLINGS IS ALLOWED.
6. 2 TRACER WIRES TO BE INSTALLED ALONG ALL PIPE AND MADE ACCESSIBLE IN ALL FLUSHING ASSEMBLY PITS AND LATERAL ASSEMBLY PITS. WIRE SHOULD BE ACCESSIBLE FOR CONNECTION EVERY 500 FEET OR LESS. IF NOT, A TRACER BOX RATED FOR HIGHWAY LOADING SHALL BE PROVIDED AS NEEDED FOR CONNECTION EVERY 500' OR LESS.
7. ALL BRANCHES OF TEES AND WYES ARE TO MATCH THE LARGEST PIPE SIZE.
8. 54" MINIMUM COVER REQUIRED OVER ALL PIPING.
9. MINIMUM PIPE LENGTH OF 6" BETWEEN ALL FITTINGS.

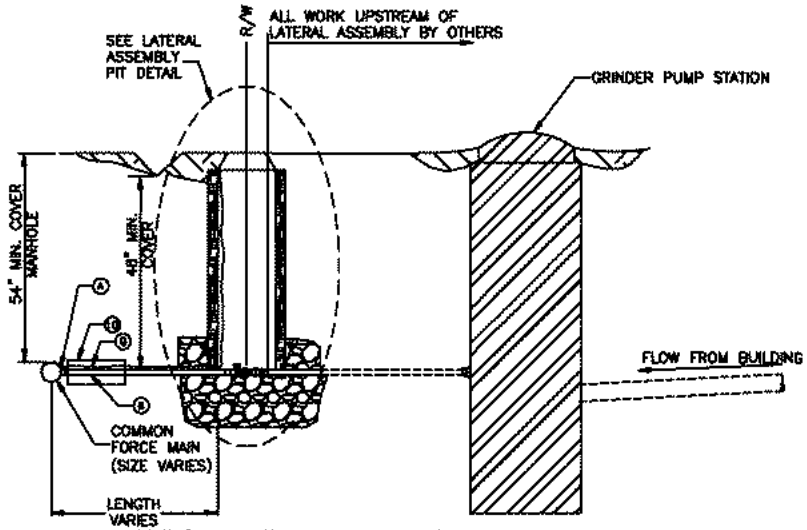

TYPICAL LATERAL INSTALLATION

N.T.S.

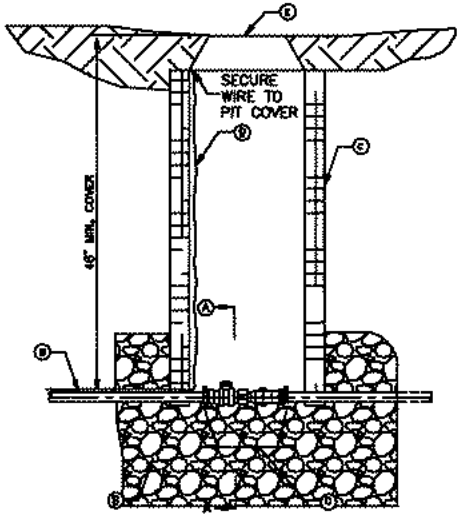

LATERAL ASSEMBLY PIT DETAIL

N.T.S.

NOTES:
1. CONTRACTOR SHALL TAG EACH CURB STOP WITH ITS CORRESPONDING HOME ADDRESS
2. TAG IS TO BE MADE OF NON-CORROSIVE MATERIAL WITH LARGE STAMPED NUMBERS, AND IS TO BE SECURELY ATTACHED TO THE CURB BOX EITHER DIRECTLY OR USING NON-CORROSIVE TIES IN A LOCATION VISIBLE AND LEGIBLE FROM THE SURFACE BUT NOT WHERE IT WILL INTERFERE WITH OPERATION OF THE VALVE.
3. BED THE ASSEMBLY AND PIPE WITH STONE TO THE SPRINGLINE. DO NOT REST THE PIT ON TOP OF THE LATERAL PIPE.

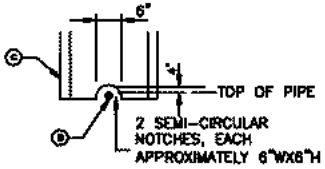

SECTION A-A

MATERIAL NOTES

1. 2" POLYETHYLENE SHUT-OFF BALL VALVE (FULLY PORTED)
2. 2" TRANSITION FITTING FROM HDPE TO STAINLESS STEEL (MALE THREADS)
3. 2" MALE CAM-LOCK W/ CAP (FEMALE THREADS)
4. 45° ELBOW (SIZE VARIES)
5. NON-REDUCING BRANCH TEES (SIZE VARIES)
6. LATERAL WYE (SIZE VARIES)
7. REDUCER, IF APPLICABLE (SIZE VARIES)
8. #8 COMPACTED CRUSHED STONE, MIN. 8" UNDER BOTTOM OF STRUCTURE AND PIPE
9. TRACER WIRE
10. 4" PVC PIPE, 18" LENGTH

A. ELECTROFUSION PUNCH TEE WITH 1-1/4" BUTT FUSION.
B. 1-1/4" LOW PRESSURE SEWER LATERAL PIPE
C. 24" DIA. HDPE FOR PIT (OPEN BOTTOM)
D. LATERAL ASSEMBLY (PRE-ASSEMBLED, INCLUDES STAINLESS STEEL VALVE CURB STOP AND INTEGRAL CHECK VALVE WITH POLYPROPYLENE COMPRESSION ADAPTOR FITTINGS AT EACH END)
E. PIT COVER (WITH "SEWER" STAMPED INTO SURFACE) BY STAR PRODUCTS #SP-V32026SEWER
F. 24" DIA. PRECAST RCP FOR PIT (OPEN BOTTOM)
G. NEENAH R-1772 FRAME & SOLID LID WITH 2 CONCEALED PICKHOLES AND SELF SEALING GASKET WITH "SANITARY SEWER" STAMPED INTO SURFACE
H. MAINLINE LOW PRESSURE SEWER PIPE (SIZE VARIES)
I. 2" LOW PRESSURE SEWER PIPE
J. 4-1/4" CAST IRON ROADWAY VALVE BOX AND COVER (WITH "SEWER" STAMPED INTO SURFACE) SUITABLE FOR HIGHWAY LOADING

GENERAL NOTES

1. ALL MATERIALS AND INSTALLATION IS TO CONFORM TO THE REQUIREMENTS INCLUDED IN THE TECHNICAL SPECIFICATIONS.
2. ALL PIPE AND FITTINGS ARE TO BE HDPE, MINIMUM DR 11, SIZED IN ACCORDANCE WITH IPS, PRESSURE RATING OF 160 PSI OR GREATER, UNLESS OTHERWISE NOTED.
3. FITTINGS MAY BE FABRICATED OR MOLDED.
4. JOINING OF FITTINGS MAY BE ACCOMPLISHED VIA BUTT FUSION OR ELECTROFUSION EXCEPT WHERE COMPRESSION FITTINGS ARE INDICATED.
5. LIMITED USE OF ELECTROFUSION COUPLINGS IS ALLOWED.
6. 2 TRACER WIRES TO BE INSTALLED ALONG ALL PIPE AND MADE ACCESSIBLE IN ALL FLUSHING ASSEMBLY PITS AND LATERAL ASSEMBLY PITS. WIRE SHOULD BE ACCESSIBLE FOR CONNECTION EVERY 500 FEET OR LESS. IF NOT, A TRACER BOX RATED FOR HIGHWAY LOADING SHALL BE PROVIDED AS NEEDED FOR CONNECTION EVERY 500' OR LESS.
7. ALL BRANCHES OF TEES AND WYES ARE TO MATCH THE LARGEST PIPE SIZE.
8. 54" MINIMUM COVER REQUIRED OVER ALL PIPING.
9. MINIMUM PIPE LENGTH OF 6" BETWEEN ALL FITTINGS.

CITIZENS ENERGY GROUP

LOW PRESSURE SYSTEM DETAIL

FIGURE 500.03

CITIZENS ENERGY GROUP

LOW PRESSURE SYSTEM DETAIL

FIGURE 500.04

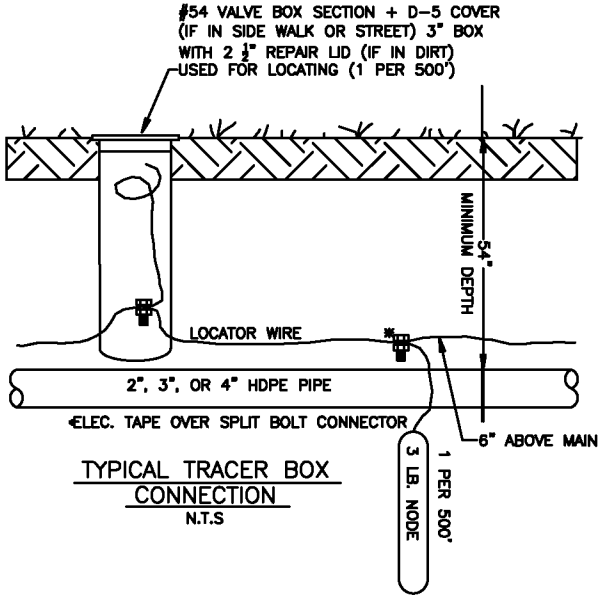

TYPICAL TRACER BOX CONNECTION

N.T.S

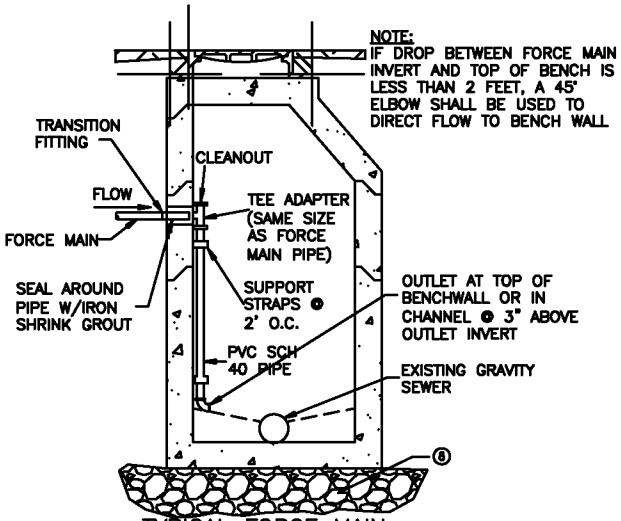

TYPICAL FORCE MAIN CONNECTION TO EXISTING MANHOLE

N.T.S

MATERIAL NOTES

1. 2" POLYETHYLENE SHUT-OFF BALL VALVE (FULLY PORTED)
2. 2" TRANSITION FITTING FROM HDPE TO STAINLESS STEEL (MALE THREADS)
3. 2" MALE CAM-LOCK W/ CAP (FEMALE THREADS)
4. 45° ELBOW (SIZE VARIES)
5. NON-REDUCING BRANCH TEES (SIZE VARIES)
6. LATERAL WYE (SIZE VARIES)
7. REDUCER, IF APPLICABLE (SIZE VARIES)
8. #8 COMPACTED CRUSHED STONE, MIN. 6" UNDER BOTTOM OF STRUCTURE AND PIPE
9. TRACER WIRE
10. 4" PVC PIPE, 18" LENGTH

A. ELECTROFUSION PUNCH TEE WITH 1-1/4" BUTT FUSION.
B. 1-1/4" LOW PRESSURE SEWER LATERAL PIPE
C. 24" DIA. HDPE FOR PIT (OPEN BOTTOM)
D. LATERAL ASSEMBLY (PRE-ASSEMBLED, INCLUDES STAINLESS STEEL VALVE CURB STOP AND INTEGRAL CHECK VALVE WITH POLYPROPYLENE COMPRESSION ADAPTOR FITTINGS AT EACH END)
E. PIT COVER (WITH "SEWER" STAMPED INTO SURFACE) BY STAR PRODUCTS #SP-V32026SEWER
F. 24" DIA. PRECAST RCP FOR PIT (OPEN BOTTOM)
G. NEENAH R-1772 FRAME & SOLID LID WITH 2 CONCEALED PICKHOLES AND SELF SEALING GASKET WITH "SANITARY SEWER" STAMPED INTO SURFACE
H. MAINLINE LOW PRESSURE SEWER PIPE (SIZE VARIES)
I. 2" LOW PRESSURE SEWER PIPE
J. 4-1/4" CAST IRON ROADWAY VALVE BOX AND COVER (WITH "SEWER" STAMPED INTO SURFACE) SUITABLE FOR HIGHWAY LOADING

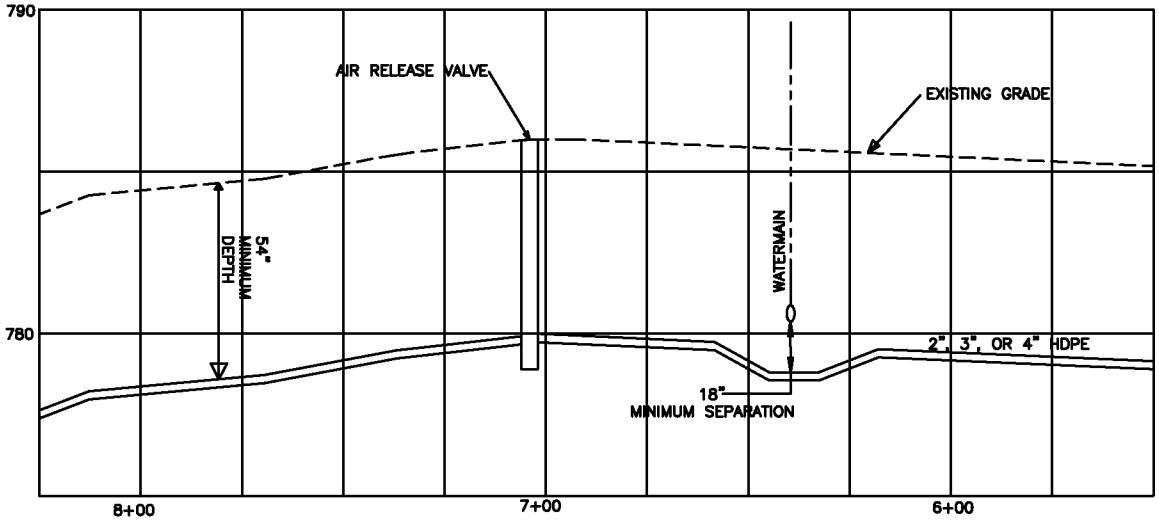

TYPICAL LOW PRESSURE SEWER PROFILE

N.T.S.

GENERAL NOTES

1. ALL MATERIALS AND INSTALLATION IS TO CONFORM TO THE REQUIREMENTS INCLUDED IN THE TECHNICAL SPECIFICATIONS.
2. ALL PIPE AND FITTINGS ARE TO BE HDPE, MINIMUM DR 11, SIZED IN ACCORDANCE WITH IPS, PRESSURE RATING OF 160 PSI OR GREATER, UNLESS OTHERWISE NOTED.
3. FITTINGS MAY BE FABRICATED OR MOLDED.
4. JOINING OF FITTINGS MAY BE ACCOMPLISHED VIA BUTT FUSION OR ELECTROFUSION EXCEPT WHERE COMPRESSION FITTINGS ARE INDICATED.
5. LIMITED USE OF ELECTROFUSION COUPLINGS IS ALLOWED.
6. 2 TRACER WIRES TO BE INSTALLED ALONG ALL PIPE AND MADE ACCESSIBLE IN ALL FLUSHING ASSEMBLY PITS AND LATERAL ASSEMBLY PITS. WIRE SHOULD BE ACCESSIBLE FOR CONNECTION EVERY 500 FEET OR LESS. IF NOT, A TRACER BOX RATED FOR HIGHWAY LOADING SHALL BE PROVIDED AS NEEDED FOR CONNECTION EVERY 500' OR LESS.
7. ALL BRANCHES OF TEES AND WYES ARE TO MATCH THE LARGEST PIPE SIZE.
8. 54" MINIMUM COVER REQUIRED OVER ALL PIPING.
9. MINIMUM PIPE LENGTH OF 6" BETWEEN ALL FITTINGS.
10. INSTALL AIR RELEASE VALVE AT HIGH POINTS ALONG LOW PRESSURE SEWER ALIGNMENT.

I-69 SECTION 6.5 SANITARY SEWER CONFLICT RELOCATIONS IN-CONTRACT

PROJECT NO. 92RE04119

90% DESIGN PACKAGE
MARCH 2020

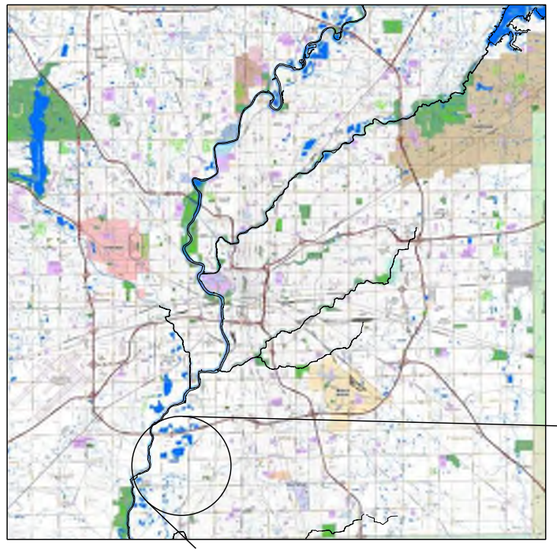

LOCATION MAP

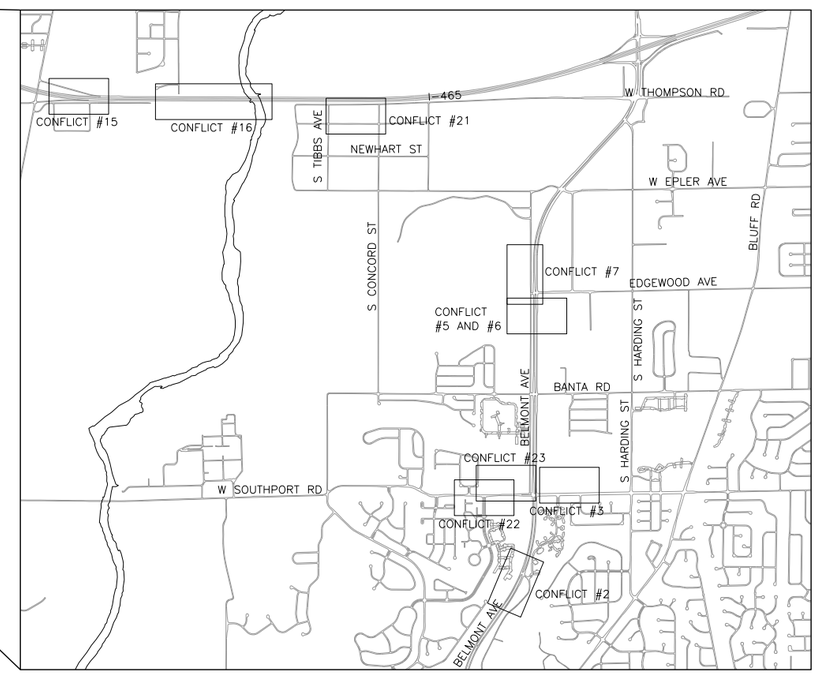

PROJECT LOCATION

0' 2000' 4000'

citizens energy group

2020 N MERIDIAN STREET
INDIANAPOLIS, IN 46202

BLACK & VEATCH

8415 ALLISON POINTE BOULEVARD
SUITE 410
INDIANAPOLIS, IN 46250

B&V PN 403503

REVISIONS		
DATE	DESCRIPTION	BY

NOT FOR CONSTRUCTION

CERTIFIED BY DATE

INDEX TO DRAWINGS

DRAWING No. SHEET No.	DESCRIPTION
GENERAL	
	COVER SHEET
CN-1	INDEX TO DRAWINGS
CN-2	ABBREVIATIONS
CN-3	NOTES
SITE PLAN AND PROFILE	
SS-1	SEWER RELOCATION PROJECTS OVERALL SITE PLAN
SS-2	PROPOSED SEWER RELOCATION PLAN FOR CONFLICT #2 PROJECT AREA, STA 0+00 TO STA 7+50
SS-3	PROPOSED SEWER RELOCATION PLAN FOR CONFLICT #2 PROJECT AREA, STA 7+50 TO STA 14+84
SS-4	PROPOSED SEWER RELOCATION PLAN FOR CONFLICT #3 PROJECT AREA, SITE PLAN
SS-5	PROPOSED SEWER RELOCATION PLAN FOR CONFLICT #5 & #6 PROJECT AREA, STA 0+00 TO STA 8+00
SS-6	PROPOSED SEWER RELOCATION PLAN FOR CONFLICT #5 & #6 PROJECT AREA, STA 8+00 TO STA 13+25
SS-7	PROPOSED SEWER RELOCATION PLAN FOR CONFLICT #7 PROJECT AREA, SITE PLAN (1 OF 2)
SS-8	PROPOSED SEWER RELOCATION PLAN FOR CONFLICT #7 PROJECT AREA, SITE PLAN (2 OF 2)
SS-9	PROPOSED SEWER RELOCATION PLAN FOR CONFLICT #15 PROJECT AREA, STA 0+00 TO STA 3+88
SS-10	PROPOSED SEWER RELOCATION PLAN FOR CONFLICT #16 PROJECT AREA, STA 0+00 TO STA 7+50
SS-11	PROPOSED SEWER RELOCATION PLAN FOR CONFLICT #16 PROJECT AREA, STA 7+50 TO STA 16+92
SS-12	PROPOSED SEWER RELOCATION PLAN FOR CONFLICT #21 PROJECT AREA, SITE PLAN
SS-13	PROPOSED SEWER RELOCATION PLAN FOR CONFLICT #22 PROJECT AREA, SITE PLAN
SS-14	PROPOSED SEWER RELOCATION PLAN FOR CONFLICT #23 PROJECT AREA, SITE PLAN
MAINTENANCE OF TRAFFIC	
MT-1	DETAILS
EROSION AND SEDIMENTATION CONTROL	
EC-1	DETAILS
EC-2	NOTES
DETAILS	
DT-1	MISCELLANEOUS DETAILS
DT-2	MISCELLANEOUS DETAILS

C:\pw_working\bvw_americas\d1013879\CN-01.dwg, 3/2/2020 2:59:49 PM, spa49354

PLOTTED: SPA49354, 3/2/2020 2:59:34 PM
SAVED: SPA49354, 3/2/2020 2:59:31 PM
PW ID:

D403503
B&V PROJECT NUMBER: 403503

REVISIONS		
DATE	REVISION	BY
	90% DESIGN SUBMITTAL NOT FOR CONSTRUCTION	

citizens energy group

BLACK & VEATCH

RECOMMENDED FOR APPROVAL XX XX

DESIGNED: SJF DRAWN: JWS
CHECKED: JAG CHECKED: SJF

CITIZENS ENERGY GROUP

GENERAL
INDEX TO DRAWINGS

I-69 SECTION 6.5 SANITARY SEWER CONFLICT RELOCATIONS
CEG PROJECT NO.: 92RE04119
DRAWING NUMBER
CN-1
XX OF XX

AD	ACCESS DOOR, ANODE
ADD	ADDITIONAL
ADH	ADHESIVE
ADJ	ADJUSTABLE, ADJACENT
AFF	ABOVE FINISH FLOOR
AH	AHEAD
AL	ACTIVE LEAF
ALT	ALTERNATE, (IVE)
ALUM	ALUMINUM
ANOD	ANODIZED
APPR	APPROACH
APPROX	APPROXIMATE, (LY)
ARCH	ARCHITECTURAL
ASPH	ASPHALT
ASSY	ASSEMBLY
ASTM	AMERICAN SOCIETY FOR TESTING AND MATERIALS
AUTO	AUTOMATIC
AUX	AUXILIARY
AVE	AVENUE
B	BEAM
BV	BLACK & VEATCH
B TO B	BACK TO BACK
BA	BEARING AREA
BAL	BALANCE
BD	BOARD
BF	BLIND FLANGE
BITUM	BITUMINOUS
BLDG	BUILDING
BLK	BLOCK
BLVD	BOULEVARD
BM	BENCHMARK
BOF	BOTTOM OF FOOTING
BOT	BOTTOM
BPMK NO	BASEPLATE MARK NUMBER
BRG	BEARING
BS	BOTH SIDES
B&S	BELL AND SPIGOT
BSMT	BASEMENT
BU	BELL–UP
BVC	BEGIN VERTICAL CURVE
C TO C	CENTER TO CENTER
CB	CATCH BASIN
CCP	CONCRETE CULVERT PIPE
C/EJ	CONTRACTION/EXPANSION JOINT
CFM	CUBIC FEET PER MINUTE
CFS	CUBIC FEET PER SECOND
C&G	CURB AND GUTTER
CHKD	CHECKERED
CI	CAST IRON
CIMH	CAST IRON MANHOLE
CIMHS	CAST IRON MANHOLE STEPS
CIP	CAST IRON PIPE, CAST IN PLACE
CISP	CAST IRON SOIL PIPE
CJT	CONTROL JOINT
CL	CLASS
C/L	CENTERLINE
CLG	CEILING
CLR	CLEAR, (ANCE)
CLSM	CONTROLLED LOW STRENGTH MATERIAL
CMP	CORRUGATED METAL PIPE
CMU	CONCRETE MASONRY UNIT
CO	CLEAN OUT, COMPANY
COL	COLUMN
CONIF	CONIFER
COMB	COMBINATION
COMB SWR	COMBINED SEWER
CONC	CONCRETE
CONN	CONNECTION
CONST	CONSTRUCTION
CONT	CONTINUOUS, CONTINUATION, CONTROL
CONTR	CONTRACTOR
COR	CORNER
CORR	CORRIDOR, CORRUGATED
CP	CONTROL PANEL, CONTROL POINT
CPLG	COUPLING
CRS	COURSES, (ING)
CSK	COUNTERSUNK, (INK)
CS	COMBINED SEWER
CSO	COMBINED SEWER OVERFLOW
CT	CERAMIC TILE, CYCLE TIMER
CTR(S)	CENTER(S)
CU	CUBIC
CU YD	CUBIC YARD

D	DOOR
DBL	DOUBLE
DEG	DEGREE
DECID.	DECIDUOUS
DEPT	DEPARTMENT
DET	DETAIL
DH	DOOR HEIGHT
DI	DROP INLET, DUCTILE IRON
DIA	DIAMETER
DIM	DIMENSION
DIP	DUCTILE IRON PIPE
DISCH	DISCHARGE
DIST	DISTRIBUTION
DIV	DIVISION
DL	DEAD LOAD
DN	DOWN
DO	DOOR OPENING
DPW	DEPARTMENT OF PUBLIC WORKS
DR	DRAIN, DRIVE
DWG(S)	DRAWING(S)
DWLS	DOWELS
E	EAST, ELECTRICAL
EA	EACH
ECC	ECCENTRIC
ECC RED	ECCENTRIC REDUCER
EF	EACH FACE
EFF	EFFLUENT
EJ	EXPANSION JOINT
EL	ELEVATION
ELB	ELBOW
ELEC	ELECTRIC, (AL)
EMER	EMERGENCY
ENC	ENCASEMENT
ENT	ENTRANCE
EOB	END OF BORING
EOL	END OF LINE
EOP	EDGE OF PAVEMENT
EPA	ENVIRONMENTAL PROTECTION AGENCY
EQ	EQUAL
EQUIP	EQUIPMENT
EW	EACH WAY
EWEF	EACH WAY EACH FACE
EX	EXISTING
EXP	EXPANSION, EXPOSED
EXP JT	EXPANSION JOINT
EXT	EXTENSION, EXTERIOR, EXTERNAL
F	FAN
F TO F	FACE TO FACE
FD	FLOOR DRAIN
FDN	FOUNDATION
FE	FIRE EXTINGUISHER
FEC	FIRE EXTINGUISHER CABINET
FH	FLAT HEAD, FIRE HYDRANT
FHMS	FLAT HEAD MACHINE SCREW
FIG	FIGURE
FIN	FINISH
FIN GR	FINISH GRADE
FL	FLOOR, FLOW LINE
FLEX	FLEXIBLE
FLG	FLANGE, FLASHING
FM	FORCE MAIN
FOB	FLAT ON BOTTOM
FOT	FLAT ON TOP
FRP	FIBERGLASS REINFORCED PLASTIC
FRPMP	FIBERGLASS REINFORCED POLYMER MORTAR PIPE
FS	FAR SIDE, FLOOR SLEEVE, FLOAT SWITCH
FT	FOOT
FTG	FOOTING
FURN	FURNISH, FURNISHED
FV	FLAP VALVE
FWD	FORWARD
G	GAS
GA	GAUGE
GAL	GALLON
GALV	GALVANIZED
GB	GRANULAR BACKFILL
GEN	GENERAL, GENERATOR
GM	GAS METER
GPM	GALLONS PER MINUTE
GR	GRADE
GV	GATE VALVE
H	HIGH, HOUR
HB	HOSE BIBB
HDR	HEADER

HEX	HEXAGONAL
HGT	HEIGHT
HMC	HARNESSED MECHANICAL COUPLING
HMD	HOLLOW METAL DOOR
HMJ	HARNESSED MECHANICAL JOINT
HORIZ	HORIZONTAL
HP	HIGH POINT, HORSEPOWER
HR	HOUR, HANDRAIL
HS	HIGH STRENGTH
HV	HOSE VALVE
HVAC	HEATING,VENTILATING AND AIR CONDITIONING
HW	HOT WATER
HWY	HIGHWAY
ID	INSIDE DIAMETER
IDEM	INDIANA DEPARTMENT OF ENVIRONMENTAL MANAGEMENT
IE	THAT IS
IF	INSIDE FACE
IN	INCHES
INC	INCORPORATED, INCLONOMETER
INCL	INCLUDING
INCR	INCREASE
INST	INSTRUMENT, (ATION)
INSUL	INSULATE, (ED), (ING)
INT	INTERIOR, INTERNAL
INV	INVERT
IPS	IRON PIPE SIZE
JF	JOINT FILLER
JT	JOINT
K	KIPS
KO	KNOCK OUT
KV	KILOVOLT
KW	KILOWATT
KWH	KILOWATT HOUR
L	LOUVER
LAT	LATERAL
LB(S)	POUNDS
LF	LINEAR FEET
LG	LENGTH, LONG
LH	LEFT HAND
LIN	LINEAL, LINEAR
LL	LIVE LOAD
LN	LANE
LO	LOUVER OPENING
LPS	LOW PRESSURE SEWER
LS	LEVEL SWITCH
LT	LEFT
MACH	MACHINE
MAINT	MAINTENANCE
MAN	MANUAL
MAX	MAXIMUM
MB	MACHINE BOLT
MC	MECHANICAL COUPLING
M.E.	MATCH EXISTING
MECH	MECHANICAL
MED	MEDIUM
MET	METAL
MFM	MAGNETIC FLOWMETER
MFR(S)	MANUFACTURER(S)
MG	MILLION GALLONS
MGD	MILLION GALLONS PER DAY
MH	MANHOLE
MIN	MINIMUM, MINUTE
MISC	MISCELLANEOUS
MJ	MECHANICAL JOINT
MJRG	MECHANICAL JOINT RETAINER GLAND
MJTR	MECHANICAL JOINT WITH TIE ROD
MO	MOTOR OPERATED
MP	METERING PUMP
MS	MACHINE SCREW
MSL	MEAN SEA LEVEL
MTD	MOUNTED
MTL	MATERIAL
MTR	MOTOR
N	NORTH
N/A	NOT APPLICABLE
NAVD	NORTH AMERICAN VERTICAL DATUM
NBC	NAIL IN BOTTLE CAP
NC	NORMALLY CLOSED
NEUT	NEUTRAL
NF	NEAR FACE
NO.(S)	NUMBER(S)
NOM	NOMINAL
NORM	NORMAL

NPT	NATIONAL PIPE THREAD
NS	NEAR SIDE
NTS	NOT TO SCALE
OC	ON CENTER, ODOR CONTROL
OD	OUTSIDE DIAMETER
OF	OUTSIDE FACE, OVERFLOW
OH	OVERHEAD
OHE	OVERHEAD ELECTRICAL
OPER	OPERATING
OPNG	OPENING
OPP	OPPOSITE
OZ	OUNCE
P/L	APPARENT PROPERTY LINE
PC	POINT OF CURVE
PCC	POINT OF COMPOUND CURVATURE
PCCP	PRESTRESSED CONCRETE CYLINDER PIPE
PE	PLAIN END
PG	PRESSURE GAUGE
PH	PIPE HANGER
PI	POINT OF INTERSECTION
PIVC	POINT OF INTERSECTION ON VERTICAL CURVE
PK	PK NAIL
PKWY	PARKWAY
PL	PLATE, PLACE
PLYWD	PLYWOOD
PNL(S)	PANEL(S)
POLY	POLYMER
POT	POINT ON TANGENT
PP	POWER POLE
PR	PAIR
PROJ	PROJECTION
PS	PIPE SUPPORT
PSF	POUNDS PER SQUARE FOOT
PSI	POUNDS PER SQUARE INCH
PT	POINT, POINT OF TANGENCY
PVC	POLYVINYL CHLORIDE, POINT ON VERTICAL CURVE
PVCP	POLYVINYL CHLORIDE PIPE
PVMT	PAVEMENT
PW	POTABLE WATER
R	RADIUS, RISER
RCCP	REINFORCED CONCRETE CYLINDRICAL PIPE
RCP	REINFORCED CONCRETE PIPE
RD	ROOF DRAIN, ROAD
RECIRC	RECIRCULATING
RED	REDUCER, REDUCING
REG	REGULATOR, REGULATING
REF	REFERENCE
REINF	REINFORCING
REM	REMOVABLE
REQD	REQUIRED
RET	RETURN
REV	REVISION, REVISED, REVERSED
RG	RETAINER GLAND
RH	RIGHT HAND, ROUND HEAD, RED HEAD
RHMS	ROUND HEAD MACHINE SCREW
RHWS	ROUND HEAD WOOD SCREW
RM	ROOM
RO	ROUGH OPENING
RPM	REVOLUTIONS PER MINUTE
RR	RAILROAD
RT	RIGHT
R/W, ROW	APPARENT RIGHT–OF–WAY
S	SOUTH, SPEAKER
SAN	SANITARY SEWER
SCHED	SCHEDULE
SD	STORM DRAIN
SEC	SECOND
SECT	SECTION
SF	SILT FENCE
SG	SLUICE GATE, SCREEN AND GATE STRUCTURE
SH	SHEET
SIM	SIMILAR
SM	SHEET METAL, STRUCTURE MONITORING POINT
SP	SUMP PUMP
SPA	SPACING, SPACES
SPEC(S)	SPECIFICATION(S)
SPLY	SUPPLY
SQ	SQUARE
SS	STAINLESS STEEL
ST	STREET

ST SWR	STORM SEWER
STA	STATION
STD	STANDARD
STL	STEEL
STM	STEAM
STOR	STORAGE
STY	STORY
STR	STRUCTURAL
SUSP	SUSPENDED
SYM	SYMMETRICAL
SYS	SYSTEM
T	TRANSFORMER, TELEPHONE, TOP
TAN	TANGENT
TB	TERMINAL BOX
T&B	TOP AND BOTTOM
TBE	THREAD BOTH ENDS
TBM	TEMPORARY BENCH MARK
T.C.	TOP OF CASTING, TOP OF CURB
TEMP	TEMPERATURE, TEMPORARY
TH	TEST HOLE
THK	THICK, THICKNESS
THR	THRESHOLD
TOC	TOP OF CONCRETE
TOF	TOP OF FOOTING
TOS	TOP OF STEEL
TP	TREE PROTECTION
TV	TELEVISION
TYP	TYPICAL
UC	UNDERGROUND CABLE
UGND	UNDERGROUND
UMP	UTILITY MONITORING POINT
UNK	UNKNOWN
UNO	UNLESS NOTED OTHERWISE
USGS	UNITED STATES GEOLOGICAL SURVEY
V	VALVE, VOLT, VENT
VAC	VACUUM
VC	VERTICAL CURVE, VICTAULIC COUPLING
VCP	VITRIFIED CLAY PIPE
VGD	VALVE, DOUBLE DISC GATE
VERT	VERTICAL
VIB	VIBRATION
VKG	VALVE, KNIFE GATE
W	WEST, WIDE, WINDOW, WATT, WATER
W/	WITH
WD	WOOD, WIDTH
WF	WALL FITTING
WH	WALL HYDRANT
WL	WATER LEVEL
WM	WATER METER
WO	WINDOW OPENING
W/O	WITHOUT
WP	WATERPROOF, WORKING POINT
WS	WATERSTOP
WT	WEIGHT
WWF	WELDED WIRE FABRIC
X	BY,TIMES
YH	YARD HYDRANT
&	AND
@	AT
<	DEFLECTION ANGLE
#	NUMBER
%	PERCENT
ø	DIAMETER

NOTE:

1. THIS IS A GENERAL ABBREVIATIONS SHEET. SOME ABBREVIATIONS MAY NOT BE USED ON THIS SPECIFIC PROJECT.

PLOTTED: SPA49354, 2/6/2020 12:50:00 PM
SAVED: SPA49354, 2/6/2020 12:50:24 PM
PW ID:

D403503
B&V PROJECT NUMBER: 403503

REVISIONS		
DATE	REVISION	BY
	90% DESIGN SUBMITTAL NOT FOR CONSTRUCTION	

citizens energy group

BLACK & VEATCH

RECOMMENDED FOR APPROVAL XX XX

DESIGNED: SJF DRAWN: JWS
CHECKED: JAG CHECKED: SJF

CITIZENS ENERGY GROUP

GENERAL ABBREVIATIONS

I–69 SECTION 6.5 SANITARY SEWER CONFLICT RELOCATIONS
CEG PROJECT NO.: 92RE04119
DRAWING NUMBER
CN–2
XX OF XX

GENERAL NOTES

1. THESE NOTES APPLY TO ALL DRAWINGS.
2. VERTICAL DATUM IS THE NORTH AMERICAN VERTICAL DATUM 1988 (NAVD 88).
3. ALL COORDINATES ARE BASED ON THE INDIANA STATE PLANE COORDINATE SYSTEM EAST ZONE AND ALL BEARING AND DISTANCES ARE SHOWN GRID.
4. CALL BEFORE YOU DIG. CONTRACTOR SHALL VERIFY PRECISE LOCATIONS AND ELEVATIONS OF ALL UTILITIES AND STRUCTURES, WHETHER INDICATED ON THE DRAWINGS OR NOT, IN THE FIELD IN ADVANCE OF EXCAVATING, BY CONTACTING ALL UTILITIES AND OTHER AGENCIES, AND BY PROSPECTING. CONTRACTOR SHALL BE RESPONSIBLE FOR SUPPORT, REMOVAL, DEMOLITION, RECONSTRUCTION, AND RECONNECTION OF EXISTING FACILITIES AS REQUIRED TO COMPLETE THE WORK. IF REQUIRED AFTER FIELD VERIFICATION, CONTRACTOR SHALL COORDINATE WITH ENGINEER TO DETERMINE ANY NECESSARY MODIFICATIONS TO PROPOSED NEW WORK.
5. EXISTING UTILITIES AND STRUCTURES (UNDERGROUND, SURFACE, OR OVERHEAD) ARE INDICATED ONLY TO THE EXTENT THAT SUCH INFORMATION WAS KNOWN, OR MADE AVAILABLE TO, OR DISCOVERED BY ENGINEER IN PREPARING THE DRAWINGS. THE LOCATIONS, CONFIGURATIONS, AND ELEVATIONS OF SUBSURFACE FACILITIES AND UTILITIES ARE APPROXIMATE, AND NOT ALL UTILITIES AND FACILITIES MAY BE INDICATED. IT IS CONTRACTOR'S RESPONSIBILITY TO DETERMINE THE EXISTENCE, MATERIAL, AND EXACT LOCATION OF THESE ITEMS TO AVOID DAMAGE THERETO.
6. "SCREENED" (LIGHT) DELINEATION INDICATED ON THE DRAWINGS DENOTES EXISTING FACILITIES. "SCREENED" INFORMATION WAS TAKEN FROM EXISTING CONSTRUCTION DRAWINGS AND DATA, AND IS FOR REFERENCE ONLY, AND SHALL BE FIELD VERIFIED BY CONTRACTOR PRIOR TO THE ORDERING OF MATERIALS AND BEGINNING OF CONSTRUCTION. "BOLD" DELINEATION IS NEW WORK TO BE CONSTRUCTED UNDER THIS CONTRACT.
7. EXISTING UTILITY SERVICE CONNECTIONS TO ABUTTING PROPERTIES HAVE NOT BEEN SHOWN. CONTRACTOR SHALL CONTACT THE UTILITIES FOR MARKING FIELD LOCATIONS PRIOR TO COMMENCING WORK. ALL LATERAL AND UTILITY SERVICE CONNECTIONS SHALL BE MAINTAINED DURING CONSTRUCTION.
8. CONTRACTOR'S STAGING, PARKING, AND MATERIAL STORAGE LOCATION TO BE DETERMINED BY CONTRACTOR. ANY ADDITIONAL STORAGE OR PARKING SHALL BE THE RESPONSIBILITY OF CONTRACTOR.
9. ALL STAGING, PARKING, MATERIAL STORAGE, AND TEMPORARY EASEMENT AREAS SHALL BE RESTORED TO PRE-CONSTRUCTION GRADES AND CONDITIONS UNLESS OTHERWISE NOTED.
10. ALL COORDINATES AND EXTERNAL DIMENSIONS TO STRUCTURES ON THE SITE PLANS ARE TO THE EXTERIOR EDGE OR CORNER OF SUBSTRUCTURE WALLS AT FINISHED GRADE UNLESS OTHERWISE NOTED.
11. CONTRACTOR SHALL PROTECT AND MAINTAIN ALL EXISTING TREES, SHRUBS, AND PLANTS, UNLESS OTHERWISE NOTED.
12. STRUCTURES SUCH AS CURBS AND GUTTERS, CONCRETE AND ASPHALT DRIVES AND WALKWAYS,PAVING BRICKS,FENCING,RETAINING WALLS,ETC. CROSSED BY THE PIPELINE ARE NOT ALL INDICATED IN PROFILE. CONTRACTOR SHALL RESTORE ANY EXISTING STRUCTURES THAT ARE DISTURBED,DAMAGED,OR REMOVED BY CONSTRUCTION TO THEIR ORIGINAL CONDITIONS OR BETTER, UNLESS NOTED OTHERWISE.
13. IN DISTURBED GREEN AREAS, RESTORATION SHALL INCLUDE MINIMUM 6" TOPSOIL, SEED, FERTILIZER, AND STRAW IN ACCORDANCE WITH SPECIFICATIONS. CONTRACTOR SHALL BE RESPONSIBLE FOR MAINTAINING THE AREA UNTIL GROWTH IS ESTABLISHED.
14. ALL DEMOLISHED MATERIAL SHALL BECOME THE PROPERTY OF CONTRACTOR UNLESS OTHERWISE NOTED, AND SHALL LEGALLY BE DISPOSED OF OFF SITE.
15. MAINTAIN EXISTING DRAINAGE DURING DEMOLITION TO PREVENT IMPACT TO ADJACENT PROPERTY OWNERS.
16. ALL MONITORING WELLS ENCOUNTERED SHALL BE PROTECTED DURING CONSTRUCTION OR REPAIRED IMMEDIATELY UPON BEING DAMAGED.
17. THE SIZE, MATERIAL, DEPTH AND LOCATION OF KNOWN EXISTING SEWER FACILITIES ARE SHOWN BASED ON AVAILABLE HISTORIC INFORMATION AND ABOVE GROUND INSPECTION AND MEASUREMENT. LIMITED CONFINED SPACE ENTRY WAS UTILIZED. CONTRACTOR SHALL VERIFY ALL EXISTING SEWER INFORMATION CONTAINED IN THE CONTRACT DOCUMENTS PRIOR TO ANY CONSTRUCTION THAT COULD BE IMPACTED BY DIFFERING EXISTING CONDITIONS THAN THOSE SHOWN IN THE CONTRACT DOCUMENTS. THE COST TO CORRECT ANY FACILITIES INSTALLED PRIOR TO CONTRACTOR'S VERIFICATION OF EXISTING CONDITIONS SHALL BE AT NO COST TO THE OWNER. DIFFERING CONDITIONS DISCOVERED DURING CONTRACTOR'S VERIFICATION WILL BE HANDLED IN ACCORDANCE WITH THE CONTRACT DOCUMENTS.
18. ALL SHEET PILING SHALL BE REMOVED IN ITS ENTIRETY.
19. NATIVE MATERIAL SHALL NOT BE USED AS BACKFILL UNLESS APPROVED BY OWNER.
20. DURING THE DURATION OF THE PROJECT: CONTRACTOR SHALL BE RESPONSIBLE TO PROTECT AND ADJUST, IF IMPACTED BY THE PROJECT, WATER MAIN VALVE CASTINGS AND BOXES, GAS MAIN VALVES AND GAS SERVICE LINE CASTINGS AND BOXES, SANITARY SEWER CASTINGS, COMBINATION SANITARY-STORMWATER CASTING, THERMAL CASTINGS AND BOXES, AND WATER SERVICE LINE CURB BOXES, IN THE EVENT THAT A CASTING AND / OR BOX ARE DAMAGED DURING CONSTRUCTION, CITIZENS ENERGY GROUP WILL PROVIDE REPLACEMENT MATERIAL(S) SUCH AS RISERS, CASTINGS, AND / OR BOXES. THERE WILL NOT BE A CHARGE TO THE CONTRACTOR AS LONG AS THESE OCCURRENCES ARE NOT DUE TO CARELESSNESS OR ABUSE. CONTRACTOR SHALL BE RESPONSIBLE TO INSTALL CASTING AND BOXES. CONTACT LARRY NICHOLS PUBLIC IMPROVEMENT COORDINATOR AT (317) 340-3887 OR BRADY PHILLIPPI AT (317) 432-2879 FOR REPLACEMENT MATERIAL(S).

COORDINATION NOTES

1. CONTACT TO INDIANA DEPARTMENT OF ENVIRONMENTAL MANAGEMENT (IDEM), DEPARTMENT OF BUSINESS AND NEIGHBORHOOD SERVICES, DEPARTMENT OF PUBLIC WORKS, MARION COUNTY SOIL & WATER CONSERVATION DISTRICT, AND US ARMY CORPS OF ENGINEERS SHALL GO THROUGH THE OWNER.
2. CITIZENS ENVIRONMENTAL STEWARDSHIP HOTLINE: (317) 402-8636
3. INDIANA DEPARTMENT OF ENVIRONMENTAL MANAGEMENT, OFFICE OF EMERGENCY RESPONSE: 1 (888) 233-7745.

CONTACT INFORMATION

AT&T of Indiana
240 N. Meridian St.
Indianapolis, IN 46204
(317) 265-3050
Attn: Matt Spindler

Citizens Gas
2150 Dr. Martin Luther King Jr. St.
Indianapolis, IN 46202
(317) 927-4684
Attn: Richard A. Miller Jr.

Citizens Thermal (Chilled Water and Steam)
350 S. West St.
Indianapolis, IN 46225
(317) 693-8854
Attn: Gordon Rundle

Citizens Wastewater
2150 Dr. Martin Luther King Jr. St.
Indianapolis, IN 46202
(317) 429-3993
Attn: Dave Clark

Citizens Water
2150 Dr. Martin Luther King Jr. St.
Indianapolis, IN 46202
(317) 927-4434
Attn: Scott Ritter

City Locates
1735 S. West St.
Indianapolis, IN 46225
(317) 327-1633
Attn: Steve Babb

Comcast Cablevision
5330 E. 65th St.
Indianapolis, IN 46220
(317) 872-2225
Attn: Scott Evans

Department of Business and Neighborhood Services
City of Indianapolis
1200 S. Madison Ave.
Indianapolis, IN 46225
(317) 327-8700

Department of Parks and Recreation
City of Indianapolis
1200 S. Madison Ave.
Indianapolis, IN 46225
(317) 327-7031
Attn: Don Colvin

Department of Public Works
City of Indianapolis
1200 S. Madison Ave.
Indianapolis, IN 46225
(317) 327-2302
Attn: Theresa Mendoza

Department of Urban Forestry
City of Indianapolis
1200 S. Madison Ave., Suite 200
Indianapolis, IN 46225
(317) 234-6568
Attn: Bill Kincius

Duke Energy
1000 E. Main St.
Plainfield, IN 46168-1782
(513)287-1931
Attn: Stephen Reising

IDEM
Indiana Government Center North
100 N. Senate Ave.
Indianapolis, IN 46204
(317)232-8603

Indianapolis Airport Authority
7800 Col. H. Weir Cook Memorial Dr., Suite 100
Indianapolis, IN 46241
(317)487-5029
Attn: Corey Grannemann

Indianapolis Power & Light (IPL) AES
1230 W. Morris St.
Indianapolis, IN 46221
(317) 261-8617
Attn: Janet Snodgrass

INDOT
32 S. Broadway St.
Greenfield, IN 46160
(317)467-3475
Attn: Lavon Marshall

IPL Plant Leader of Engineering
3700 S. Harding St.
Indianapolis, IN 46217
(317)261-3669
Attn: Jerry Helderman

IUPPS
1040 Sierra Dr. Suite 1200
Greenwood, IN 46143
(317)893-1404
Attn: Chuck Muller

Marion County Soil & Water Conservation District
Discovery Hall, Suite 200
1202 E. 38th St.
Indianapolis, IN 46237
(317)786-1776
Attn: Julie Farr

Office of the Marion County Surveyor
200 E. Washington St., Suite 1922
Indianapolis, IN 46204-3327
(317)327-4150
Attn: Robert Wilcoxen

US Army Corps of Engineers
P.O. Box 59
Louisville, KY 40201-0059
(502)315-6766

Know what's below. Call before you dig.

PLOTTED: SPA49354, 2/6/2020 12:52:26 PM
SAVED: SPA49354, 2/6/2020 12:53:09 PM
PW ID:

D403503
B&V PROJECT NUMBER: 403503

REVISIONS		
DATE	REVISION	BY
	90% DESIGN SUBMITTAL NOT FOR CONSTRUCTION	

citizens energy group

BLACK & VEATCH

RECOMMENDED FOR APPROVAL XX XX

DESIGNED: SJF DRAWN: JWS
CHECKED: JAG CHECKED: SJF

CITIZENS ENERGY GROUP

GENERAL NOTES

I-69 SECTION 6.5 SANITARY SEWER CONFLICT RELOCATIONS
CEG PROJECT NO.: 92RE04119
DRAWING NUMBER
CN-3
XX OF XX

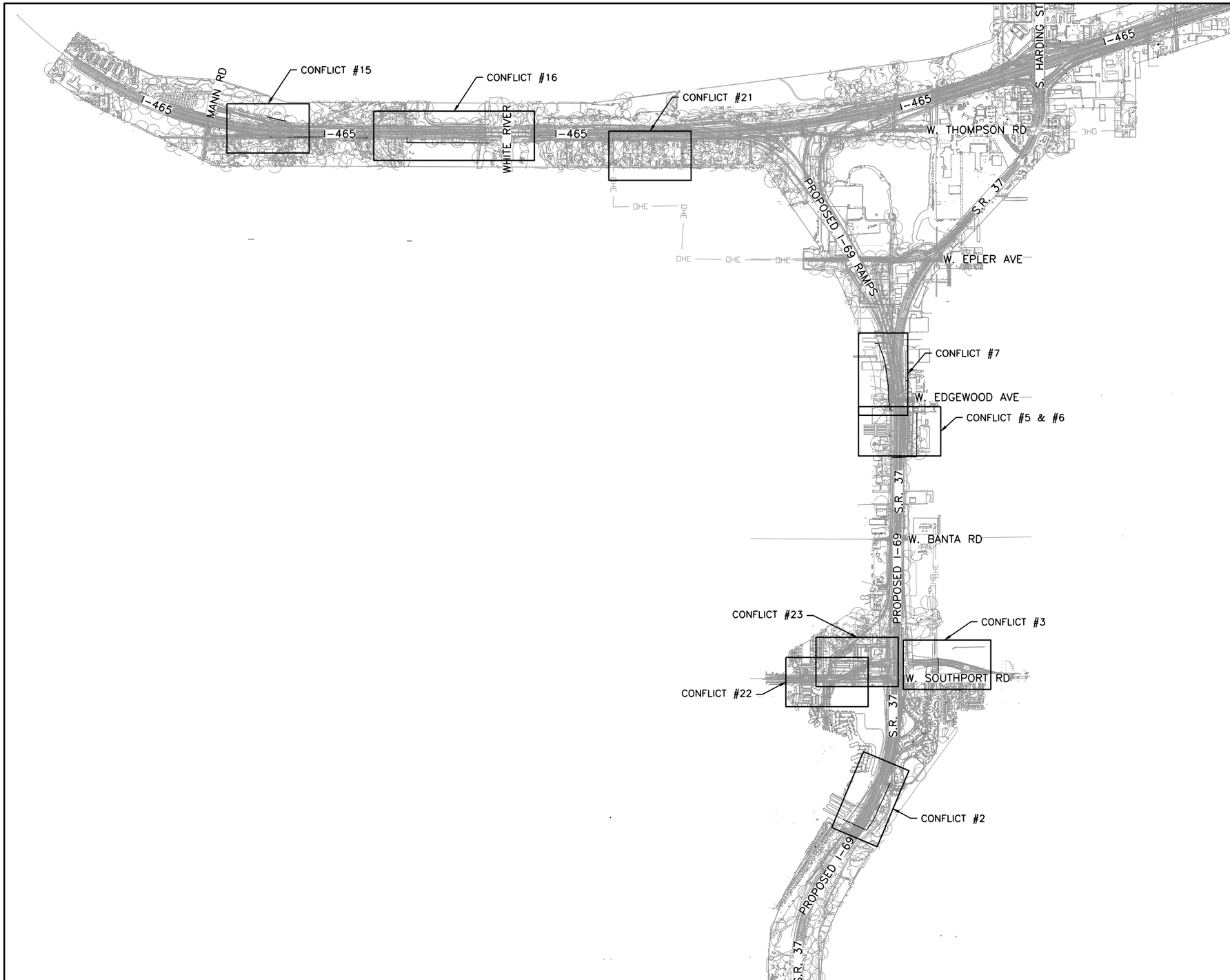

C:\pw_working\bvw_americas\d1013879\SS-1.dwg, 3/2/2020 2:56:39 PM, spa49354

PLOTTED: SPA49354, 3/2/2020 2:56:30 PM
SAVED: SPA49354, 3/2/2020 2:55:36 PM
PW ID:

D403503
B&V PROJECT NUMBER: 403503

REVISIONS		
DATE	REVISION	BY
	90% DESIGN SUBMITTAL NOT FOR CONSTRUCTION	

citizens energy group

BLACK & VEATCH

RECOMMENDED FOR APPROVAL XX XX

DESIGNED: SJF DRAWN: MWF
CHECKED: JAG CHECKED: SJF

CITIZENS ENERGY GROUP

PROPOSED SEWER RELOCATION PLAN
OVERALL SITE PLAN

I-69 SECTION 6.5 SANITARY SEWER CONFLICT RELOCATIONS
CEG PROJECT NO.: 92RE04119
DRAWING NUMBER
SS-1
XX OF XX

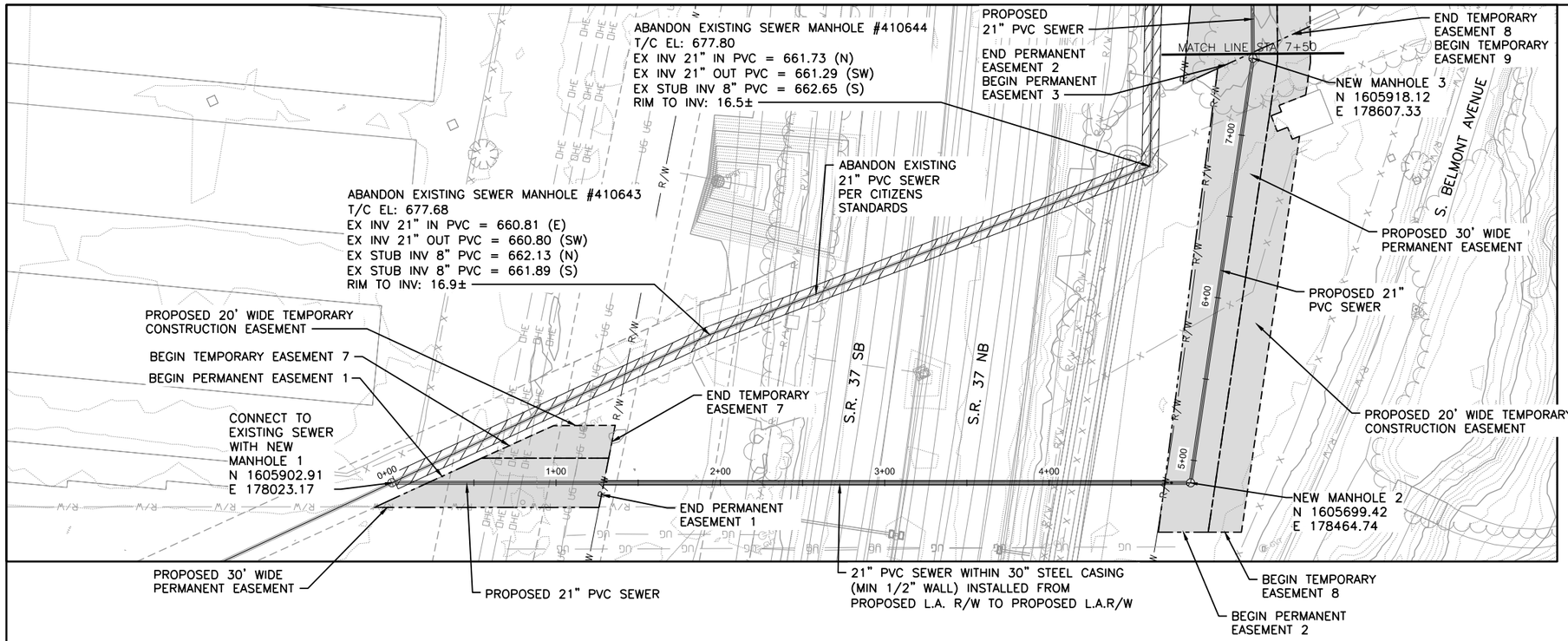

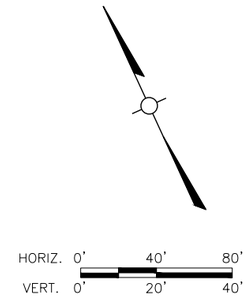

PERMANENT EASEMENTS		
EASEMENT NUMBER	PARCEL NUMBER	OWNER
1	49-14-16-127-002.00-500	SOUTHERN DUNES SELF-STORAGE, LLC.
2	49-14-16-124-012.000-500	BROWN, MARK A
3	49-14-16-124-023.000-500	BROWN, RONALD E, TRUSTEE REVOCABLE TRUST OF RONALD E BROWN
4	RELINQUISHED S. BELMONT AVENUE R/W	TBD
5	49-14-16-124-025.000-500	BUSH DEVELOPMENT COMPANY LP
6	49-14-15-144-002.000-500	ASPEN LAKES, LLC; WINSLET LAKES LLC; HUNT PACIFIC MANAGEMENT CORPORATION
TEMPORARY EASEMENTS		
7	49-14-16-127-002.000-500	SOUTHERN DUNES SELF-STORAGE LLC.
8	49-14-16-124-012.000-500	BROWN, MARK A
9	49-14-16-124-023.000-500	BROWN, RONALD E, TRUSTEE REVOCABLE TRUST OF RONALD E BROWN
10	RELINQUISHED S. BELMONT AVENUE R/W	TBD
11	49-14-16-124-025.000-500	BUSH DEVELOPMENT COMPANY LP
12	49-14-15-144-002.000-500	ASPEN LAKES, LLC; WINSLET LAKES LLC; HUNT PACIFIC MANAGEMENT CORPORATION

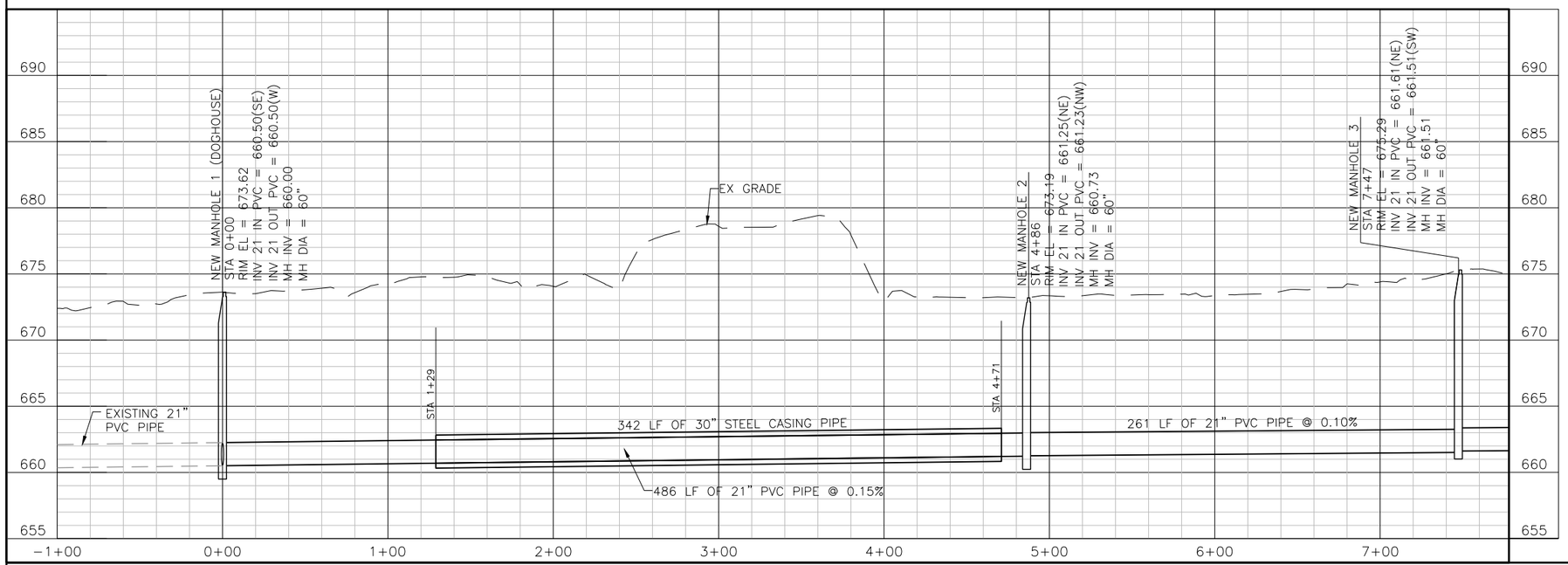

LEGEND

TO BE ABANDONDED

EASEMENT

NOTES:

1. CITIZENS 2020 SANITARY STANDARDS MANUAL SHALL BE REFERENCED AS NEEDED.

PLOTTED: SPA49354, 2/28/2020 10:24:57 AM
SAVED: SPA49354, 2/28/2020 10:26:15 AM
PW ID:

D403503
B&V PROJECT NUMBER: 403503

REVISIONS		
DATE	REVISION	BY
	90% DESIGN SUBMITTAL NOT FOR CONSTRUCTION	

citizens energy group

BLACK & VEATCH

RECOMMENDED FOR APPROVAL XX XX

DESIGNED: SJF DRAWN: MWF
CHECKED: JAG CHECKED: SJF

CITIZENS ENERGY GROUP

PROPOSED SEWER RELOCATION PLAN
FOR CONFLICT #2 PROJECT AREA
STA 0+00 TO STA 7+50

I-69 SECTION 6.5 SANITARY SEWER CONFLICT RELOCATIONS
CEG PROJECT NO.: 92RE04119
DRAWING NUMBER
SS-2
XX OF XX

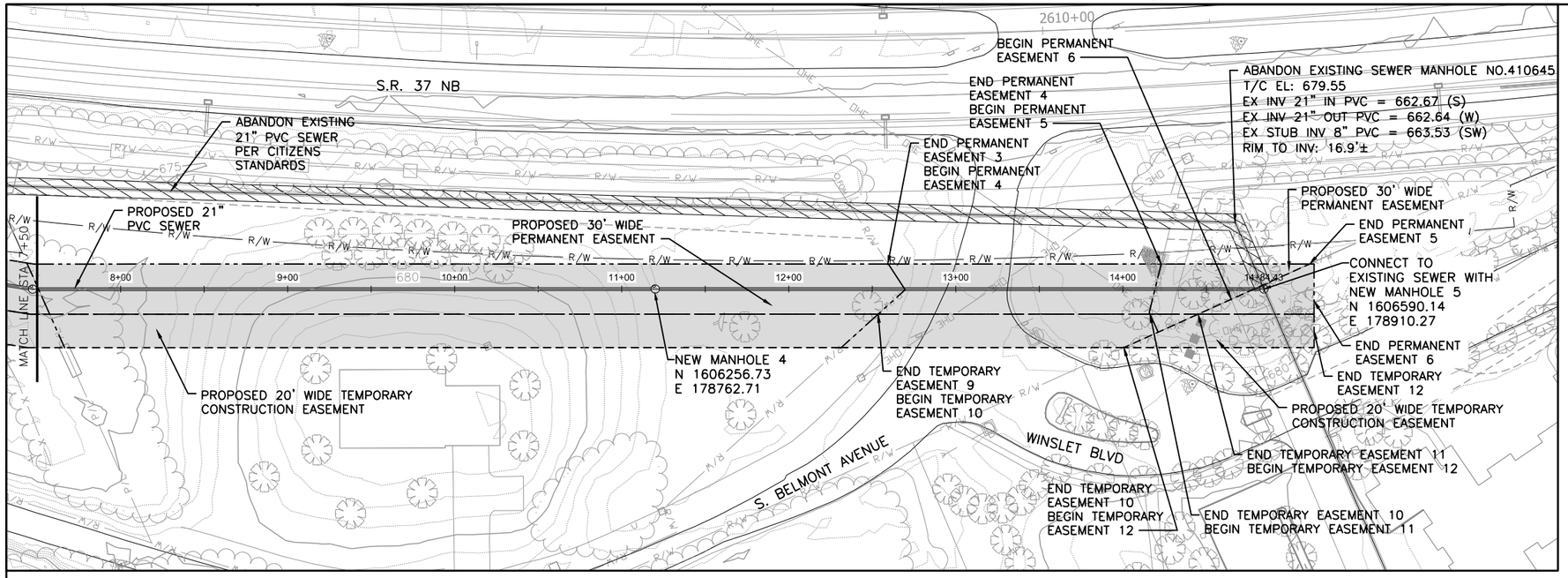

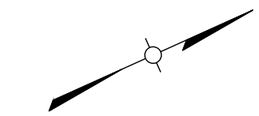

HORIZ. 0' 40' 80'
VERT. 0' 20' 40'

PERMANENT EASEMENTS		
EASEMENT NUMBER	PARCEL NUMBER	OWNER
1	49-14-16-127-002.00-500	SOUTHERN DUNES SELF-STORAGE, LLC.
2	49-14-16-124-012.000-500	BROWN, MARK A
3	49-14-16-124-023.000-500	BROWN, RONALD E, TRUSTEE REVOCABLE TRUST OF RONALD E BROWN
4	RELINQUISHED S. BELMONT AVENUE R/W	TBD
5	49-14-16-124-025.000-500	BUSH DEVELOPMENT COMPANY LP
6	49-14-15-144-002.000-500	ASPEN LAKES, LLC; WINSLET LAKES LLC; HUNT PACIFIC MANAGEMENT CORPORATION
TEMPORARY EASEMENTS		
7	49-14-16-127-002.000-500	SOUTHERN DUNES SELF-STORAGE LLC.
8	49-14-16-124-012.000-500	BROWN, MARK A
9	49-14-16-124-023.000-500	BROWN, RONALD E, TRUSTEE REVOCABLE TRUST OF RONALD E BROWN
10	RELINQUISHED S. BELMONT AVENUE R/W	TBD
11	49-14-16-124-025.000-500	BUSH DEVELOPMENT COMPANY LP
12	49-14-15-144-002.000-500	ASPEN LAKES, LLC; WINSLET LAKES LLC; HUNT PACIFIC MANAGEMENT CORPORATION

LEGEND

TO BE ABANDONDED

EASEMENT

NOTES:

1. CITIZENS 2020 SANITARY STANDARDS MANUAL SHALL BE REFERENCED AS NEEDED.

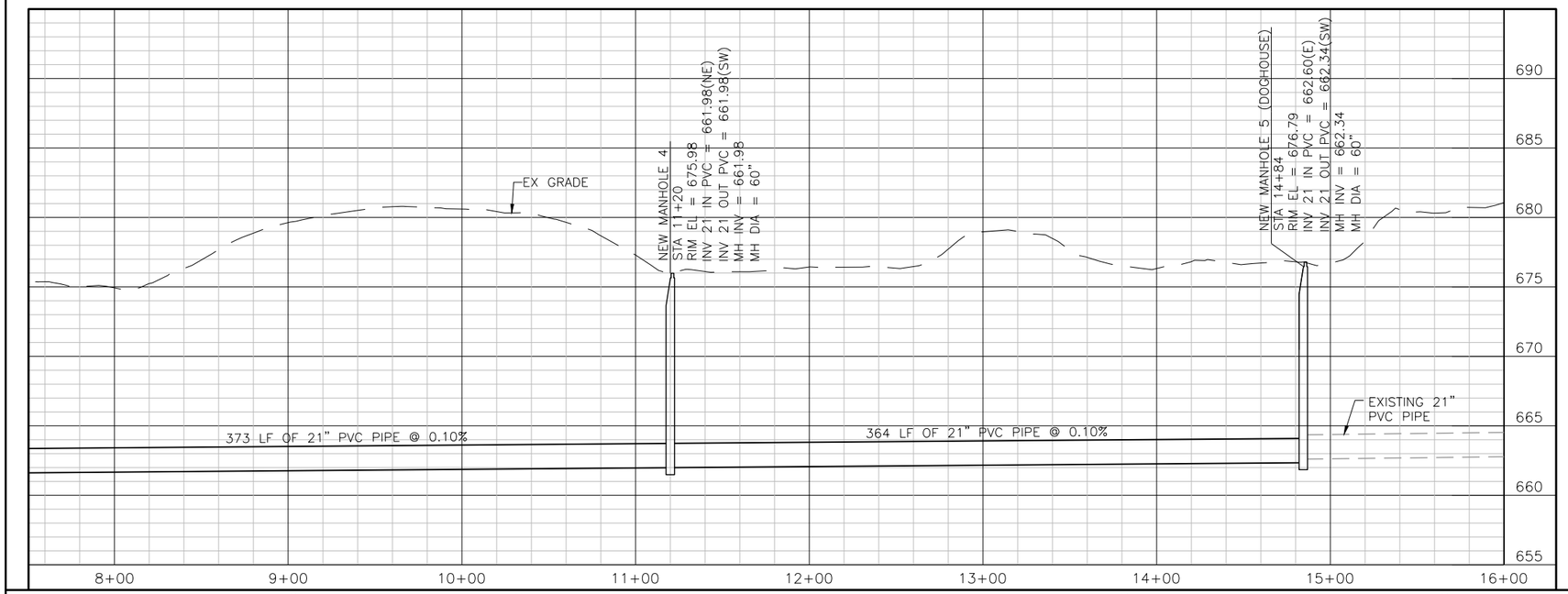

PLOTTED: SPA49354, 2/28/2020 10:29:54 AM
SAVED: SPA49354, 2/28/2020 11:39:48 AM
PW ID:

D403503
B&V PROJECT NUMBER: 403503

REVISIONS		
DATE	REVISION	BY
	90% DESIGN SUBMITTAL NOT FOR CONSTRUCTION	

citizens energy group

BLACK & VEATCH

RECOMMENDED FOR APPROVAL XX XX

DESIGNED: SJF DRAWN: MWF
CHECKED: JAG CHECKED: SJF

CITIZENS ENERGY GROUP

PROPOSED SEWER RELOCATION PLAN
FOR CONFLICT #2 PROJECT AREA
STA 7+50 TO STA 14+84.43

I-69 SECTION 6.5 SANITARY SEWER CONFLICT RELOCATIONS
CEG PROJECT NO.: 92RE04119
DRAWING NUMBER
SS-3
XX OF XX

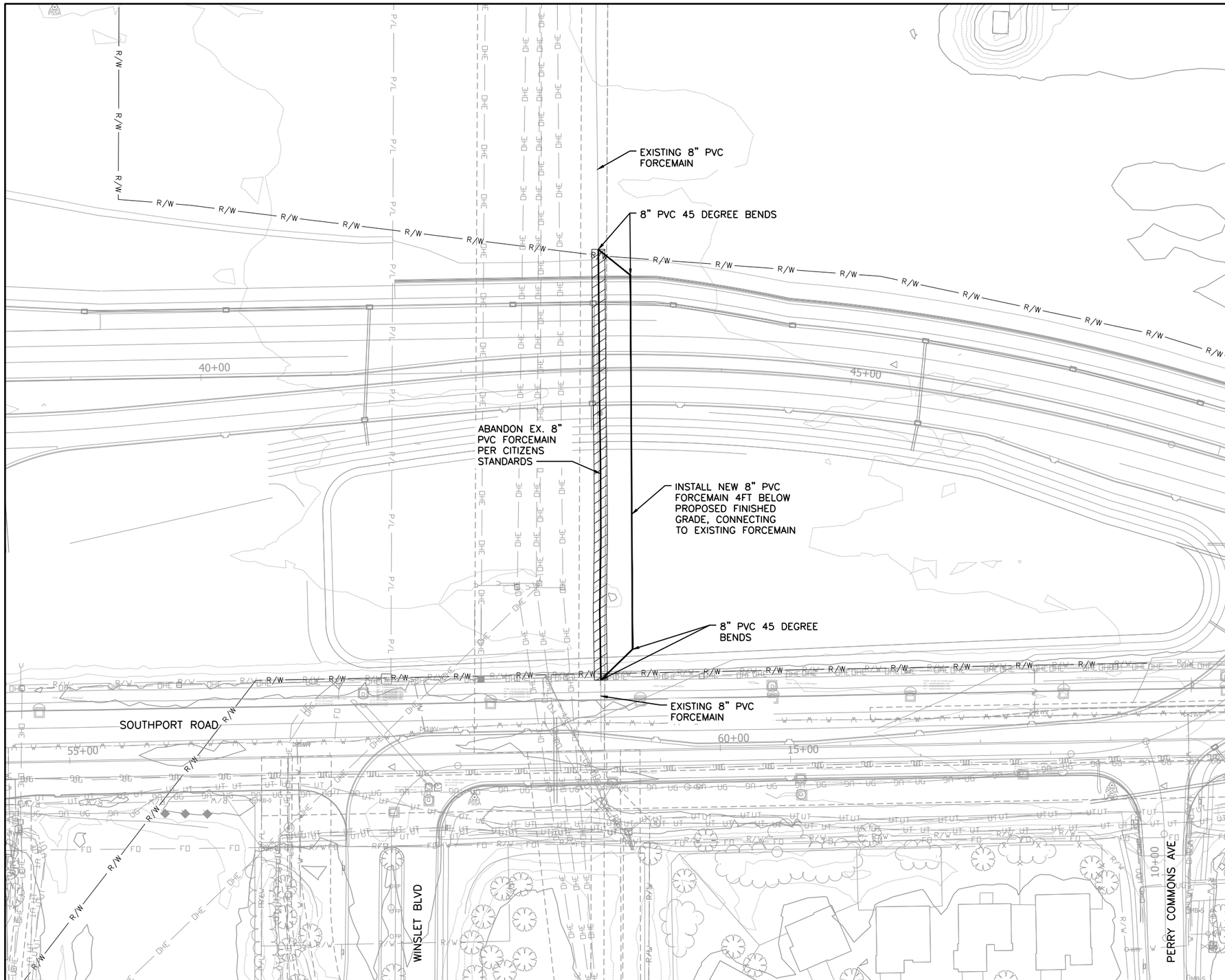

HORIZ. 0' 40' 80'
VERT. 0' 20' 40'

LEGEND

TO BE ABANDONDED

NOTES:

1. PVC FORCEMAIN PIPE AND FIFTTINGS SHALL BE IN ACCORDANCE WITH CITIZENS 2020 SANITARY STANDARDS MANUAL.

PLOTTED: SPA49354, 2/28/2020 10:32:58 AM
SAVED: SPA49354, 2/28/2020 10:33:31 AM
PW ID:
D403503 B&V PROJECT NUMBER: 403503

REVISIONS		
DATE	REVISION	BY
	90% DESIGN SUBMITTAL NOT FOR CONSTRUCTION	

citizens energy group

BLACK & VEATCH

RECOMMENDED FOR APPROVAL XX XX

DESIGNED: SJF DRAWN: MWF
CHECKED: JAG CHECKED: SJF

CITIZENS ENERGY GROUP

PROPOSED SEWER RELOCATION PLAN FOR CONFLICT #3 PROJECT AREA SITE PLAN

I-69 SECTION 6.5 SANITARY SEWER CONFLICT RELOCATIONS
CEG PROJECT NO.: 92RE04119
DRAWING NUMBER
SS-4
XX OF XX

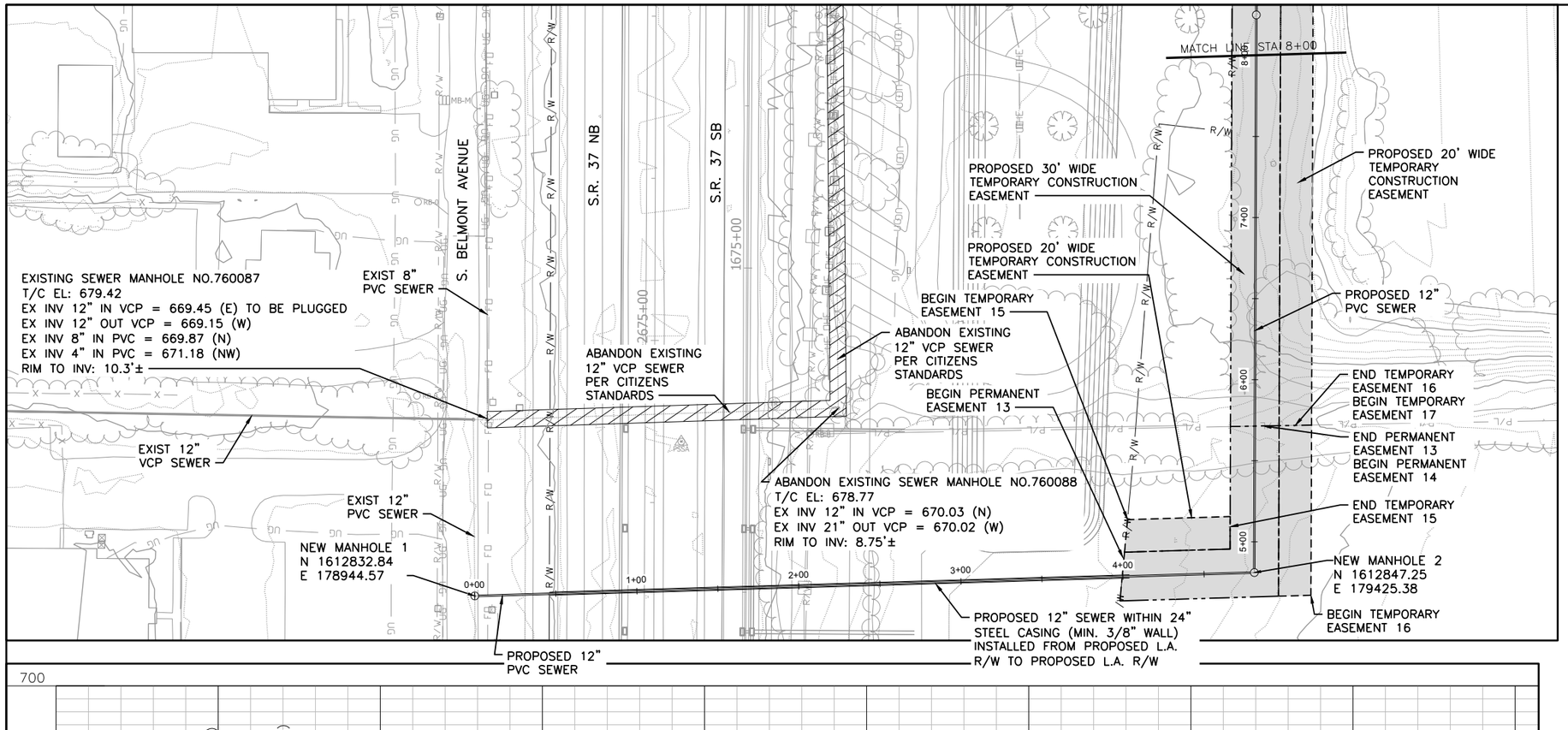

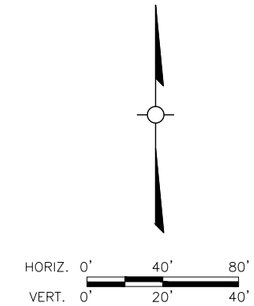

PERMANENT EASEMENTS		
EASEMENT NUMBER	PARCEL NUMBER	OWNER
13	49-14-10-105-004.000-500	R.H. MARLIN, INC.
14	49-14-10-105-003.000-500	LAKE HAVEN, LLC
TEMPORARY EASEMENTS		
15	49-14-10-105-004.000-500	R.H. MARLIN, INC.
16	49-14-10-105-004.000-500	R.H. MARLIN, INC.
17	49-14-10-105-003.000-500	LAKE HAVEN, LLC

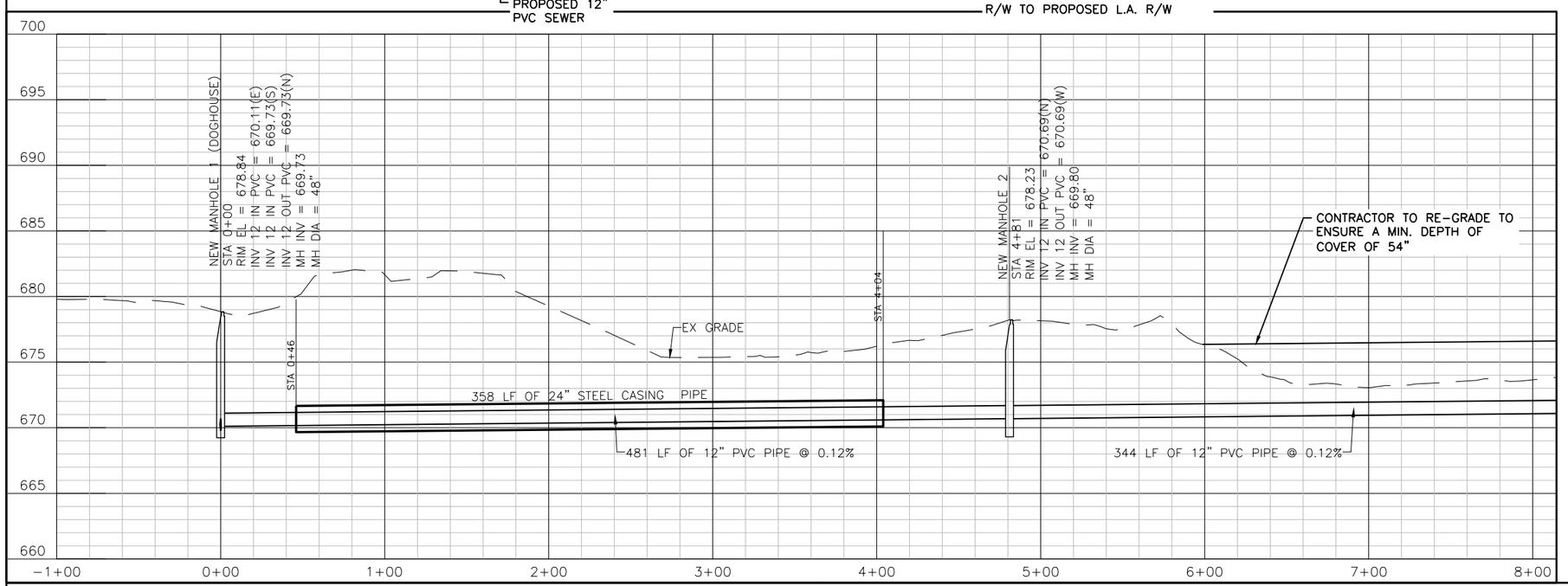

LEGEND

TO BE ABANDONDED

EASEMENT

NOTES:

1. CITIZENS 2020 SANITARY STANDARDS MANUAL SHALL BE REFERENCED AS NEEDED.

PLOTTED: SPA49354, 3/2/2020 1:48:16 PM
SAVED: SPA49354, 3/2/2020 1:49:41 PM
PW ID:

D403503
B&V PROJECT NUMBER: 403503

REVISIONS		
DATE	REVISION	BY
	90% DESIGN SUBMITTAL NOT FOR CONSTRUCTION	

citizens energy group

BLACK & VEATCH

RECOMMENDED FOR APPROVAL XX XX

DESIGNED: SJF DRAWN: MWF
CHECKED: JAG CHECKED: SJF

CITIZENS ENERGY GROUP

PROPOSED SEWER RELOCATION PLAN
FOR CONFLICT #5 AND # 6 PROJECT AREA
STA 0+00 TO STA 8+00

I-69 SECTION 6.5 SANITARY SEWER CONFLICT RELOCATIONS
CEG PROJECT NO.: 92RE04119
DRAWING NUMBER
SS-5
XX OF XX

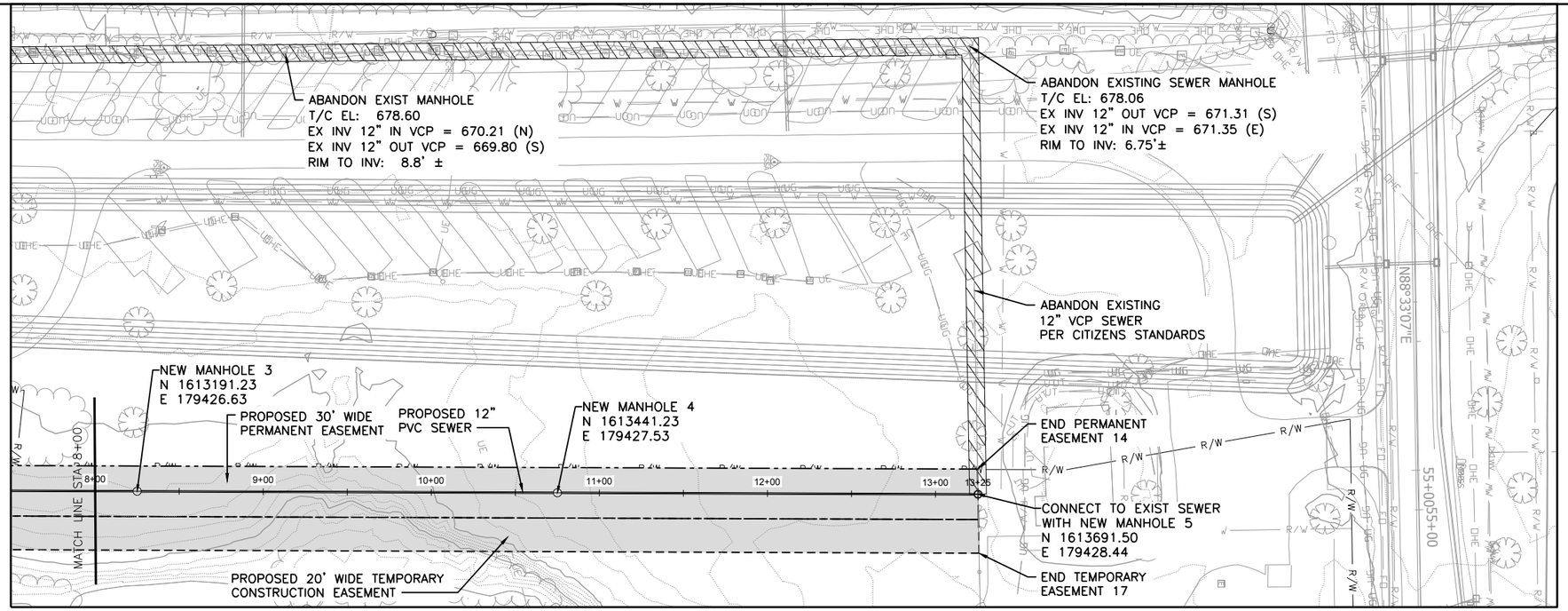

HORIZ. 0' 40' 80'
VERT. 0' 20' 40'

PERMANENT EASEMENTS		
EASEMENT NUMBER	PARCEL NUMBER	OWNER
14	49-14-10-105-003.000-500	LAKE HAVEN, LLC
TEMPORARY EASEMENTS		
17	49-14-10-105-003.000-500	LAKE HAVEN, LLC

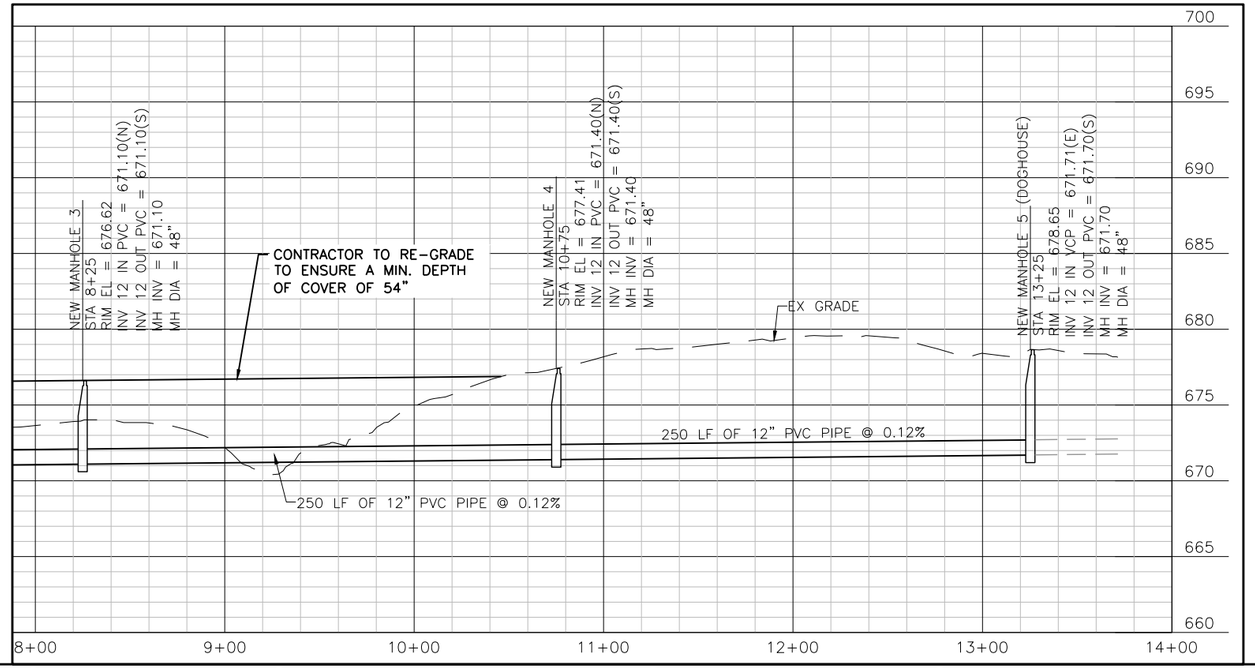

LEGEND

TO BE ABANDONDED

EASEMENT

NOTES:

1. CITIZENS 2020 SANITARY STANDARDS MANUAL SHALL BE REFERENCED AS NEEDED.

PLOTTED: SPA49354, 3/2/2020 1:50:28 PM
SAVED: SPA49354, 3/2/2020 1:51:14 PM
PW ID:

D403503
B&V PROJECT NUMBER: 403503

REVISIONS		
DATE	REVISION	BY
	90% DESIGN SUBMITTAL NOT FOR CONSTRUCTION	

citizens energy group

BLACK & VEATCH

RECOMMENDED FOR APPROVAL XX XX

DESIGNED: SJF DRAWN: MWF
CHECKED: JAG CHECKED: SJF

CITIZENS ENERGY GROUP

PROPOSED SEWER RELOCATION PLAN
FOR CONFLICT #5 & #6 PROJECT AREA
STA 8+00 TO STA 13+25

I-69 SECTION 6.5 SANITARY SEWER CONFLICT RELOCATIONS
CEG PROJECT NO.: 92RE04119
DRAWING NUMBER
SS-6
XX OF XX

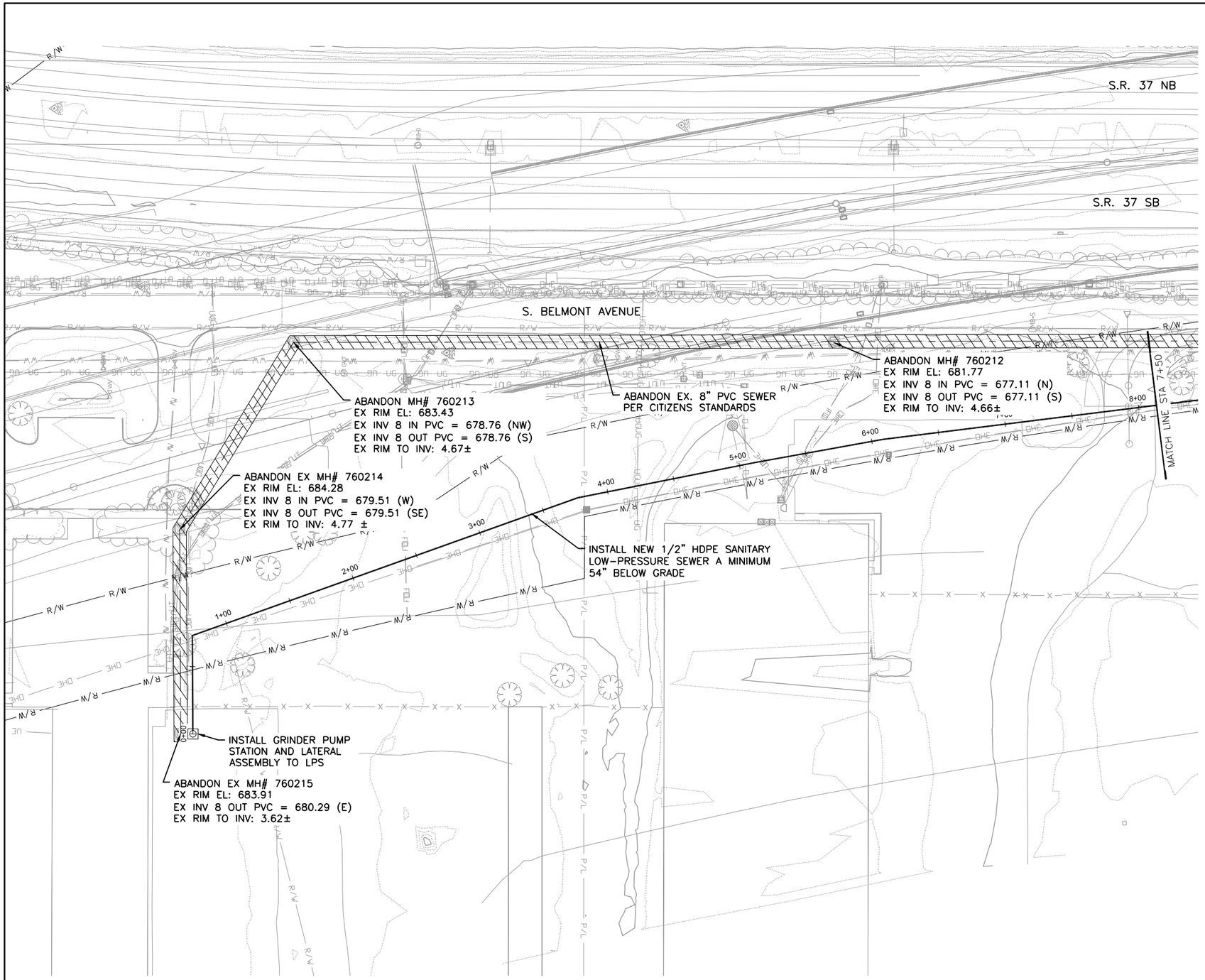

0' 20' 40' 80'

LEGEND

TO BE ABANDONDED

NOTES:

1. HDPE LOW PRESSURE SEWER SHALL BE IN ACCORDANCE WITH CITIZENS 2020 SANITARY STANDARDS MANUAL.

PLOTTED: SPA49354, 2/28/2020 2:07:31 PM
SAVED: SPA49354, 2/28/2020 2:09:02 PM
PW ID:

D403503
B&V PROJECT NUMBER: 403503

REVISIONS		
DATE	REVISION	BY
	90% DESIGN SUBMITTAL NOT FOR CONSTRUCTION	

citizens energy group

BLACK & VEATCH

RECOMMENDED FOR APPROVAL XX XX

DESIGNED: SJF DRAWN: MWF
CHECKED: JAG CHECKED: SJF

CITIZENS ENERGY GROUP

PROPOSED SEWER RELOCATION PLAN
FOR CONFLICT #7 PROJECT AREA
SITE PLAN (1 OF 2)

I-69 SECTION 6.5 SANITARY SEWER CONFLICT RELOCATIONS
CEG PROJECT NO.: 92RE04119
DRAWING NUMBER
SS-7
XX OF XX

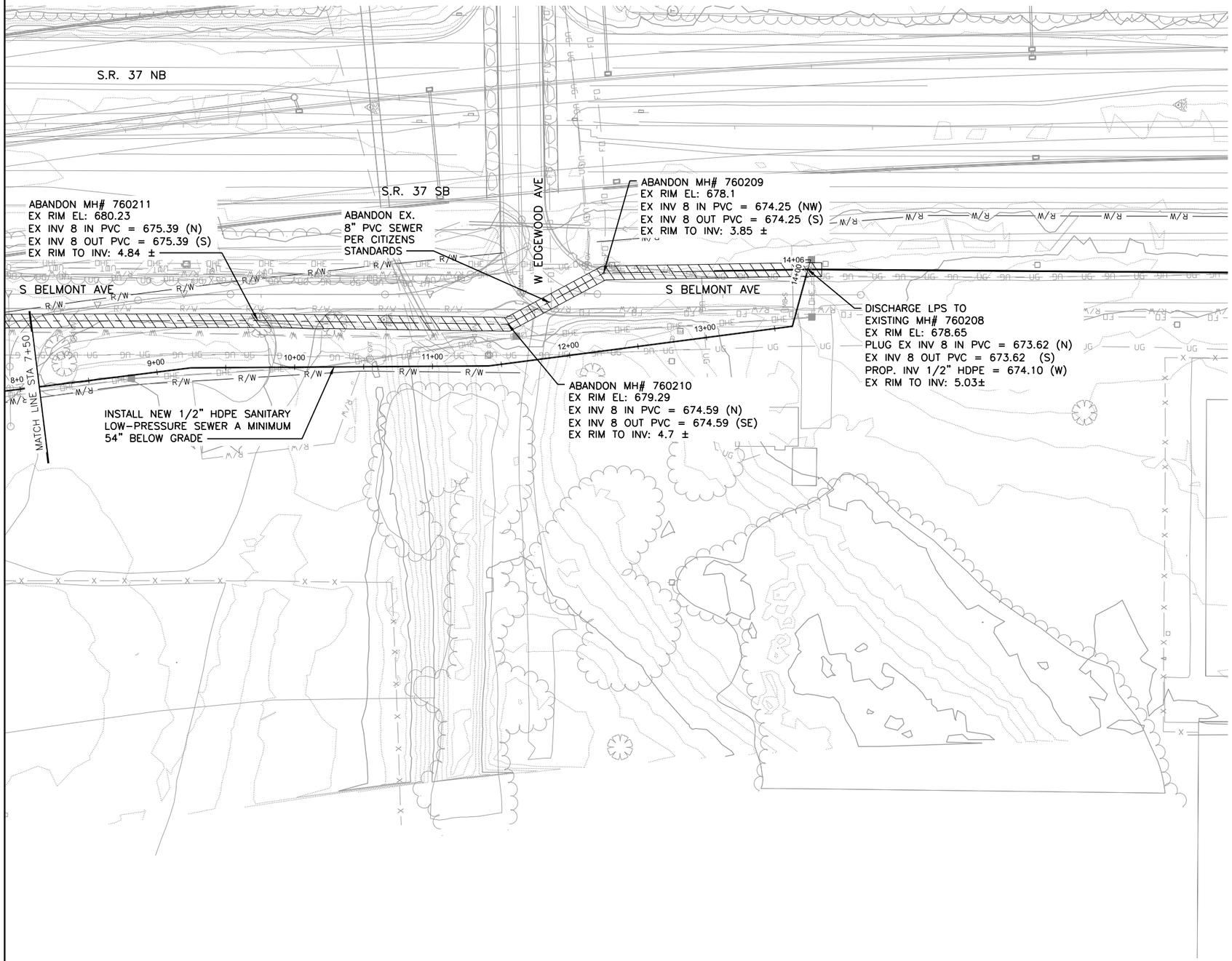

0' 20' 40' 80'

LEGEND

TO BE ABANDONDED

NOTES:

1. HDPE LOW PRESSURE SEWER SHALL BE IN ACCORDANCE WITH CITIZENS 2020 SANITARY STANDARDS MANUAL.

PLOTTED: SPA49354, 2/28/2020 2:09:33 PM
SAVED: SPA49354, 2/28/2020 2:10:16 PM
PW ID:

D403503
B&V PROJECT NUMBER: 403503

REVISIONS		
DATE	REVISION	BY
	90% DESIGN SUBMITTAL NOT FOR CONSTRUCTION	

citizens energy group

BLACK & VEATCH

RECOMMENDED FOR APPROVAL XX XX

DESIGNED: SJF DRAWN: MWF
CHECKED: JAG CHECKED: SJF

CITIZENS ENERGY GROUP

PROPOSED SEWER RELOCATION PLAN
FOR CONFLICT #7 PROJECT AREA
SITE PLAN (2 OF 2)

I-69 SECTION 6.5 SANITARY SEWER CONFLICT RELOCATIONS
CEG PROJECT NO.: 92RE04119
DRAWING NUMBER
SS-8
XX OF XX

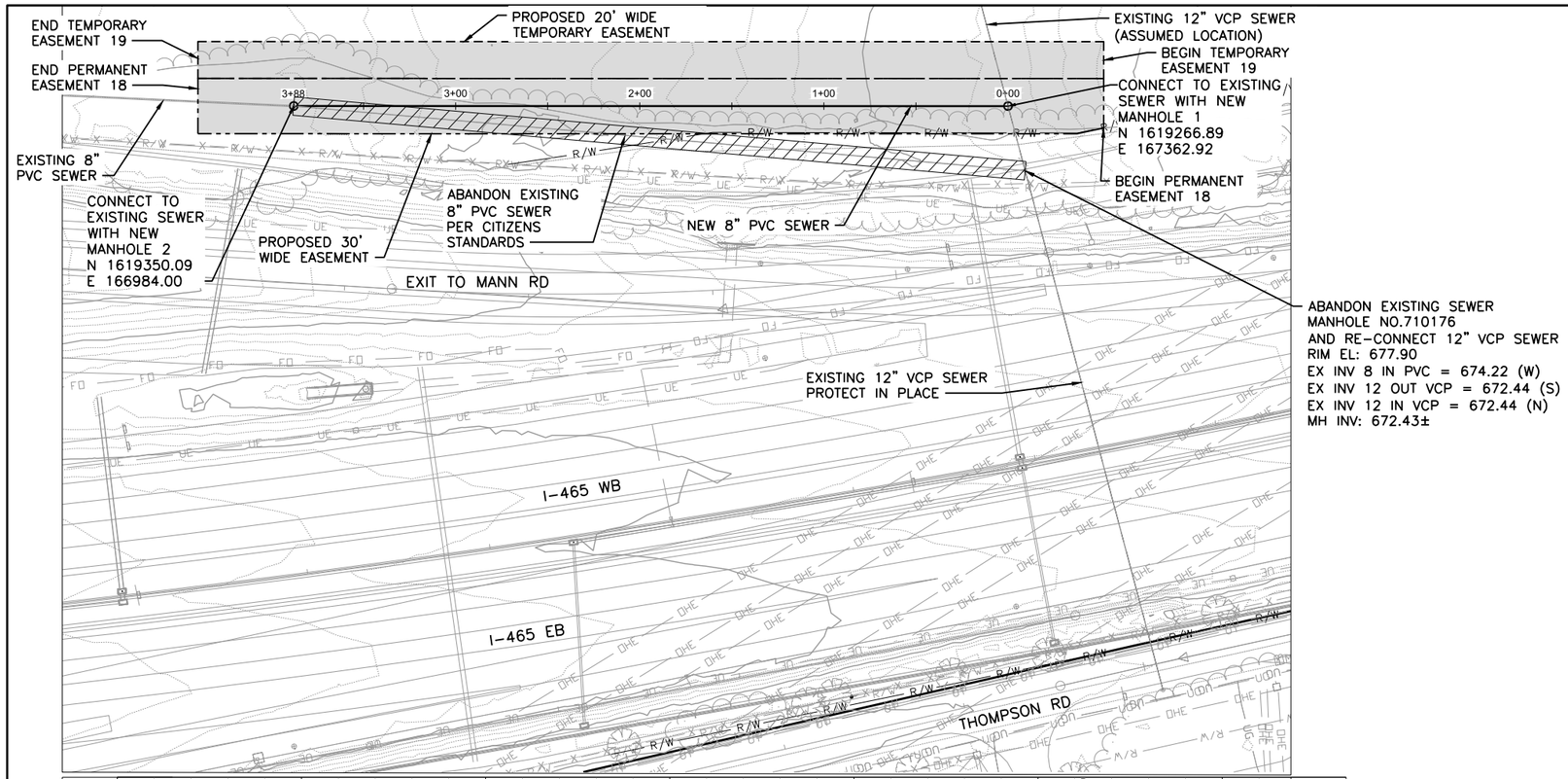

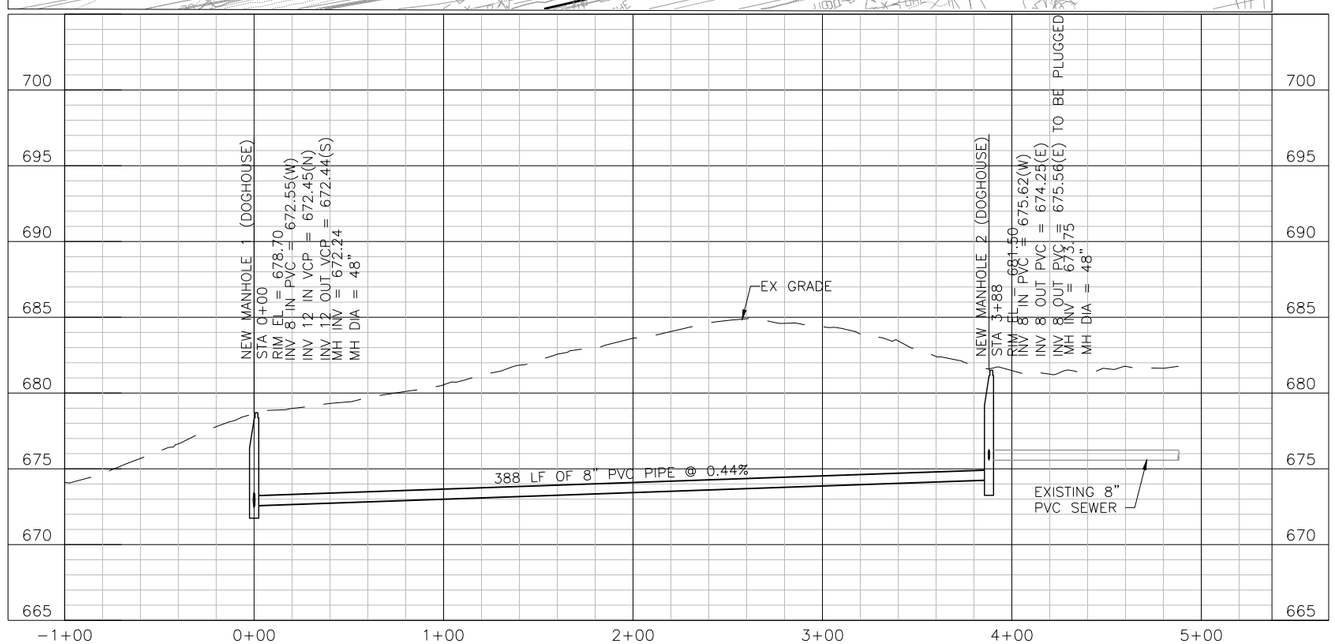

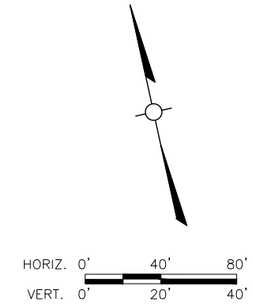

PERMANENT EASEMENTS		
EASEMENT NUMBER	PARCEL NUMBER	OWNER
18	49-11-31-107-001.000-200	MANN ROAD, LLC.
TEMPORARY EASEMENTS		
19	49-11-31-107-001.000-200	MANN ROAD, LLC.

LEGEND

TO BE ABANDONDED

EASEMENT

NOTES:

1. CITIZENS 2020 SANITARY STANDARDS MANUAL SHALL BE REFERENCED AS NEEDED.

PLOTTED: SPA49354, 3/2/2020 2:38:38 PM
SAVED: SPA49354, 3/2/2020 2:39:26 PM
PW ID:

D403503
B&V PROJECT NUMBER: 403503

REVISIONS		
DATE	REVISION	BY
	90% DESIGN SUBMITTAL NOT FOR CONSTRUCTION	

citizens energy group

BLACK & VEATCH

RECOMMENDED FOR APPROVAL XX XX

DESIGNED: SJF DRAWN: MWF
CHECKED: JAG CHECKED: SJF

CITIZENS ENERGY GROUP

PROPOSED SEWER RELOCATION PLAN FOR CONFLICT #15 PROJECT AREA STA 0+00 TO STA 3+88

I-69 SECTION 6.5 SANITARY SEWER CONFLICT RELOCATIONS
CEG PROJECT NO.: 92RE04119
DRAWING NUMBER
SS-9
XX OF XX

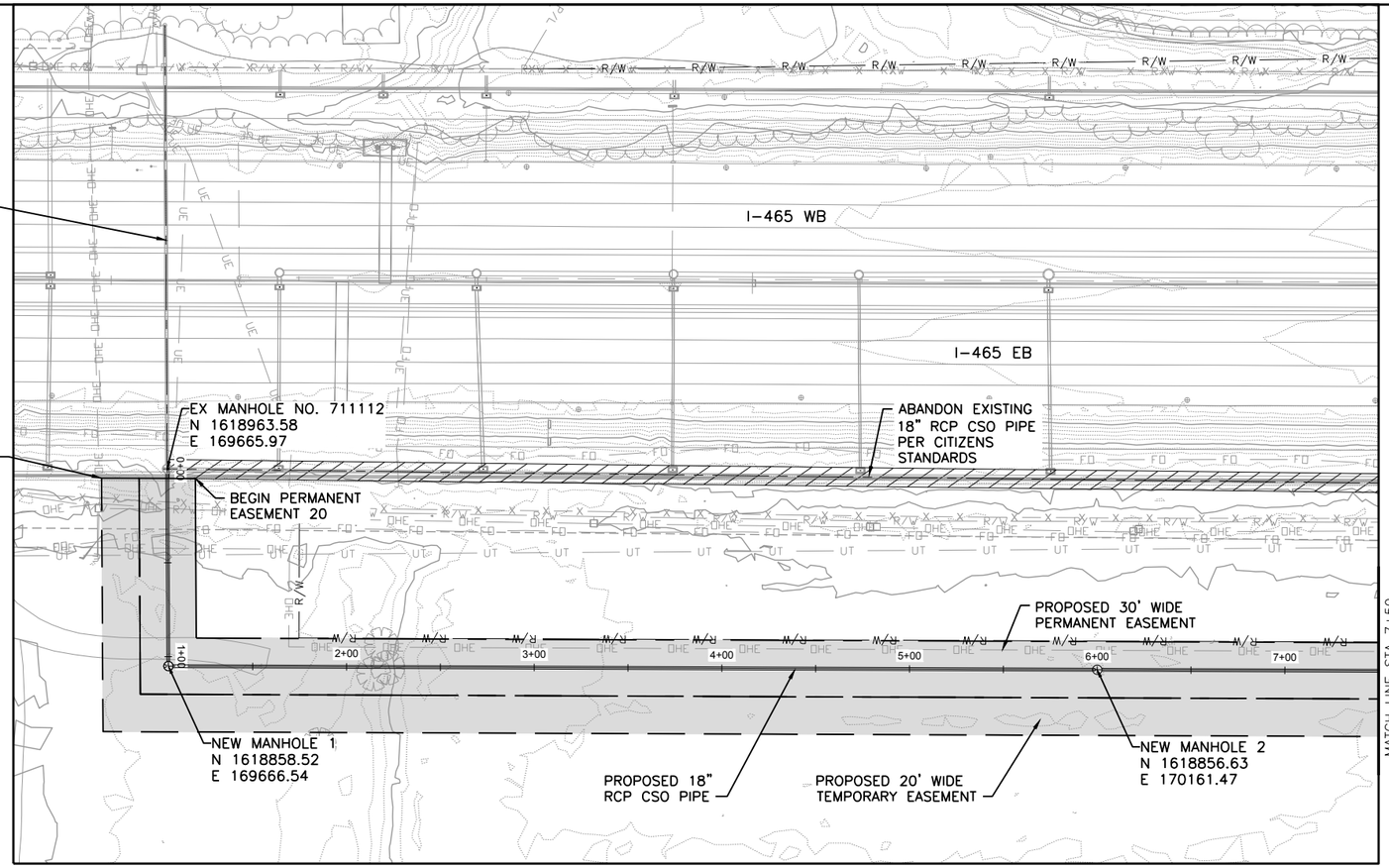

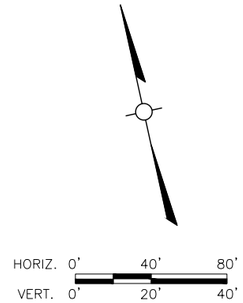

PERMANENT EASEMENTS		
EASEMENT NUMBER	PARCEL NUMBER	OWNER
20	49-14-05-104-002.000-200	SKAGGS, BRENDA J. AND HOBERT DALE SKAGGS
TEMPORARY EASEMENTS		
21	49-14-05-104-002.000-200	SKAGGS, BRENDA J. AND HOBERT DALE SKAGGS

LEGEND

TO BE ABANDONDED

EASEMENT

NOTES:

1. CITIZENS 2020 SANITARY STANDARDS MANUAL SHALL BE REFERENCED AS NEEDED.

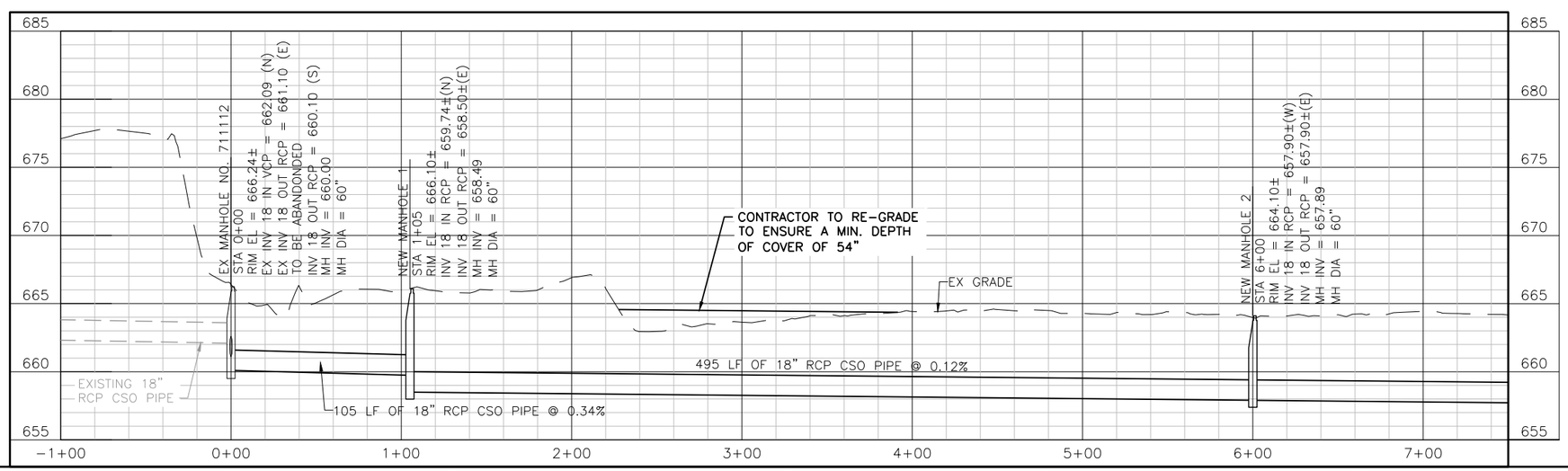

PLOTTED: SPA49354, 3/2/2020 9:57:36 AM
SAVED: SPA49354, 3/2/2020 9:58:40 AM
PW ID:

D403503
B&V PROJECT NUMBER: 403503

REVISIONS		
DATE	REVISION	BY
	90% DESIGN SUBMITTAL NOT FOR CONSTRUCTION	

citizens energy group

BLACK & VEATCH

RECOMMENDED FOR APPROVAL XX XX

DESIGNED: SJF DRAWN: MWF
CHECKED: JAG CHECKED: SJF

CITIZENS ENERGY GROUP

PROPOSED SEWER RELOCATION PLAN
FOR CONFLICT #16 PROJECT AREA
STA 0+00 TO STA 7+50

I-69 SECTION 6.5 SANITARY SEWER CONFLICT RELOCATIONS
CEG PROJECT NO.: 92RE04119
DRAWING NUMBER
SS-10
XX OF XX

C:\pw_working\bvw_americas\d1013879\SS-10-11.dwg, 3/4/2020 3:44:45 PM, fod78390

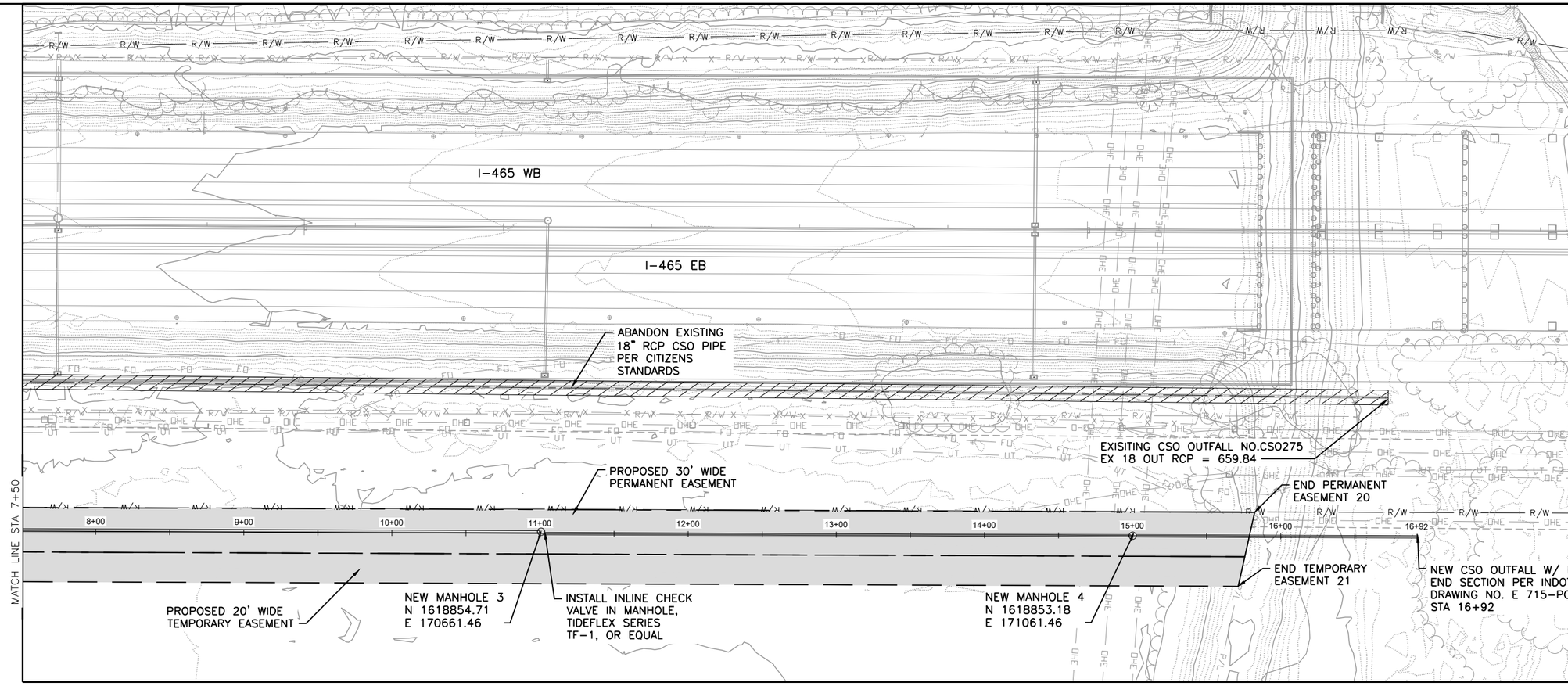

HORIZ. 0' 40' 80'
VERT. 0' 20' 40'

LEGEND

TO BE ABANDONDED

EASEMENT

NOTES:

1. CITIZENS 2020 SANITARY STANDARDS MANUAL SHALL BE REFERENCED AS NEEDED.

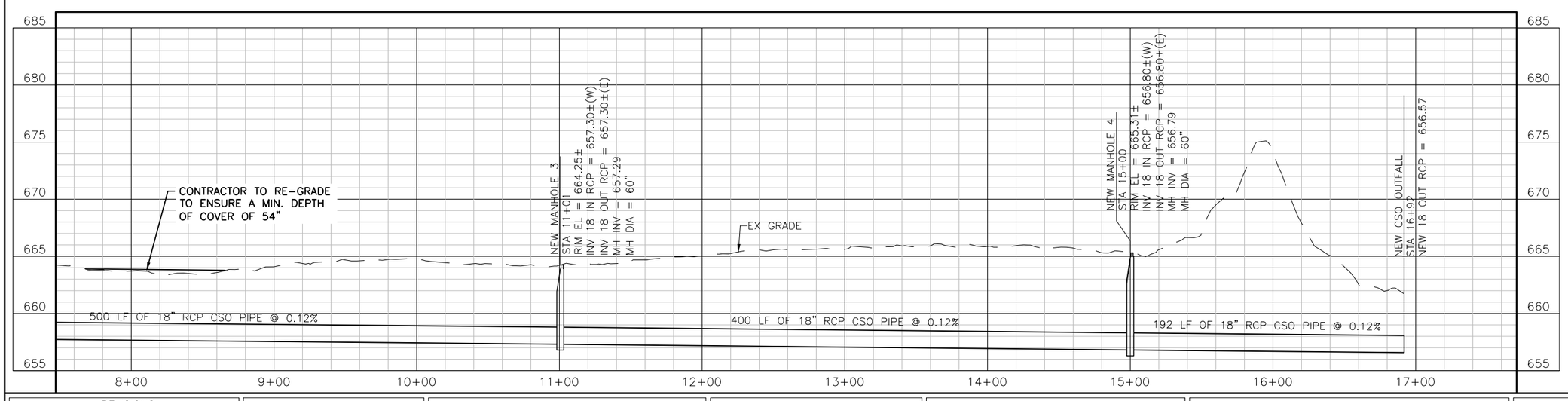

PLOTTED: SPA49354, 3/2/2020 9:57:36 AM
SAVED: SPA49354, 3/2/2020 9:58:40 AM
PW ID:
D403503
B&V PROJECT NUMBER: 403503

REVISIONS		
DATE	REVISION	BY
	90% DESIGN SUBMITTAL NOT FOR CONSTRUCTION	

citizens energy group

BLACK & VEATCH

RECOMMENDED FOR APPROVAL XX XX

DESIGNED: SJF DRAWN: MWF
CHECKED: JAG CHECKED: SJF

CITIZENS ENERGY GROUP

PROPOSED SEWER RELOCATION PLAN FOR CONFLICT #16 PROJECT AREA STA 7+50 TO STA 16+92

I-69 SECTION 6.5 SANITARY SEWER CONFLICT RELOCATIONS

CEG PROJECT NO.: 92RE04119

DRAWING NUMBER

SS-11

XX OF XX

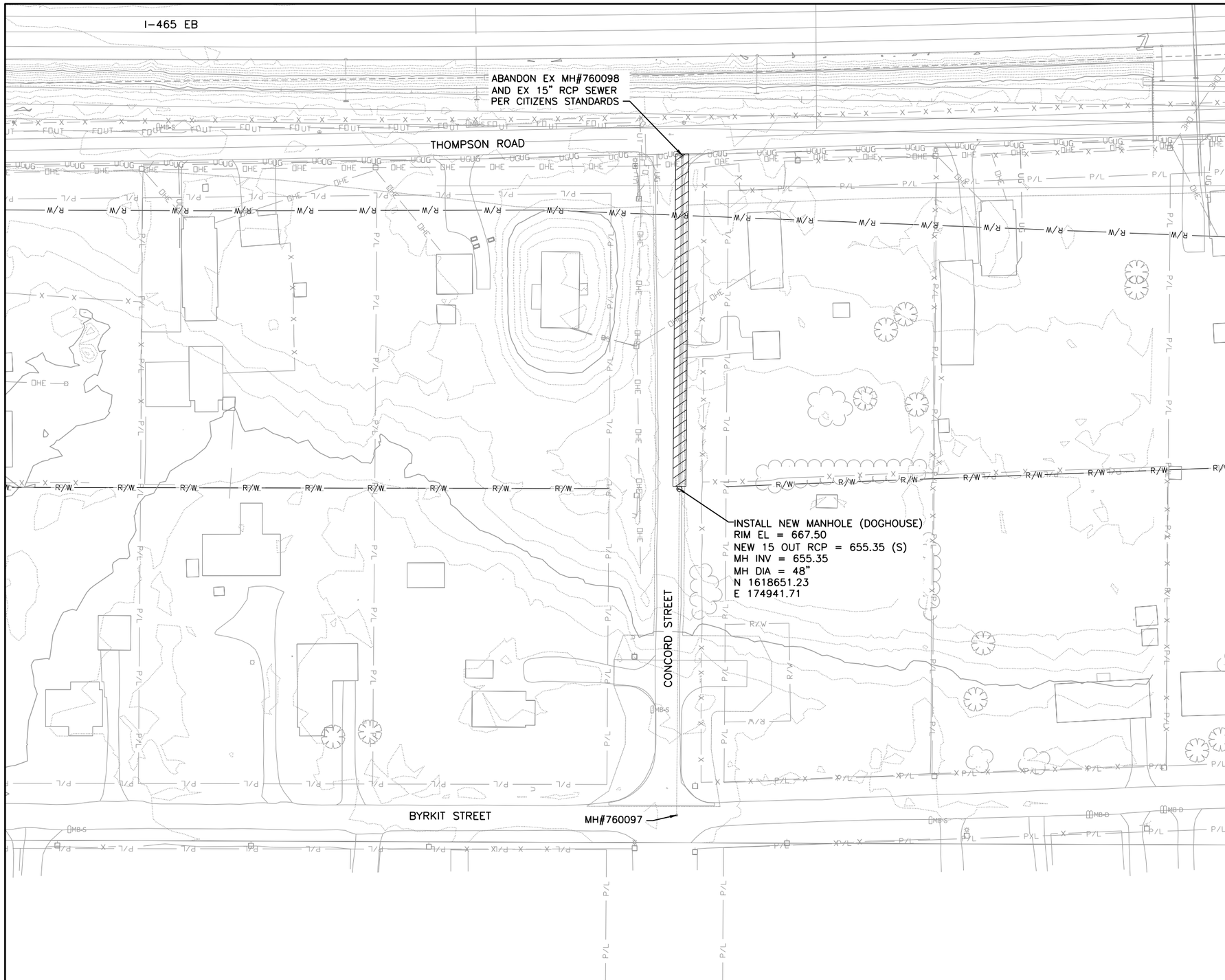

HORIZ. 0' 40' 80'
VERT. 0' 20' 40'

LEGEND

TO BE ABANDONDED

NOTES:

1. CITIZENS 2020 SANITARY STANDARDS MANUAL SHALL BE REFERENCED AS NEEDED.

PLOTTED: SPA49354, 3/2/2020 2:37:16 PM
SAVED: SPA49354, 3/2/2020 2:38:01 PM
PW ID:

D403503
B&V PROJECT NUMBER: 403503

REVISIONS		
DATE	REVISION	BY
	90% DESIGN SUBMITTAL NOT FOR CONSTRUCTION	

citizens energy group

BLACK & VEATCH

RECOMMENDED FOR APPROVAL XX XX

DESIGNED: SJF DRAWN: MWF
CHECKED: JAG CHECKED: SJF

CITIZENS ENERGY GROUP

PROPOSED SEWER RELOCATION PLAN
FOR CONFLICT #21 PROJECT AREA
SITE PLAN

I-69 SECTION 6.5 SANITARY SEWER CONFLICT RELOCATIONS
CEG PROJECT NO.: 92RE04119
DRAWING NUMBER
SS-12
XX OF XX

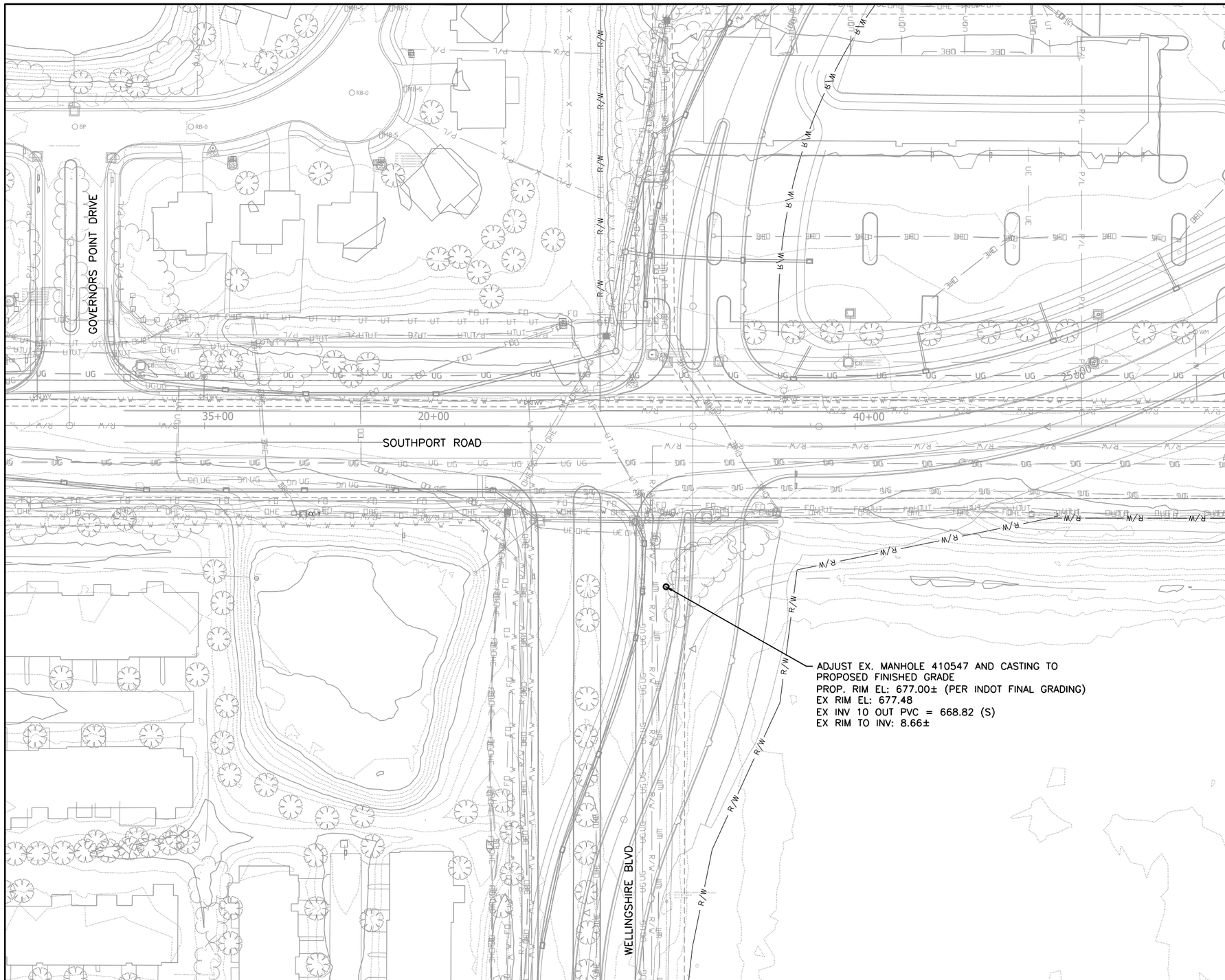

HORIZ. 0' 40' 80'
VERT. 0' 20' 40'

NOTES:

1. CITIZENS 2020 SANITARY STANDARDS MANUAL SHALL BE REFERENCED AS NEEDED.

C:\pw_working\bvw_americas\d1013879\SS-13.dwg, 3/4/2020 3:46:42 PM, fod78390

PLOTTED: –
SAVED: –
PW ID:

D403503
B&V PROJECT NUMBER: 403503

REVISIONS		
DATE	REVISION	BY
	90% DESIGN SUBMITTAL NOT FOR CONSTRUCTION	

citizens energy group

BLACK & VEATCH

RECOMMENDED FOR APPROVAL XX XX

DESIGNED: SJF DRAWN: MWF
CHECKED: JAG CHECKED: SJF

CITIZENS ENERGY GROUP

PROPOSED SEWER RELOCATION PLAN
FOR CONFLICT #22 PROJECT AREA
SITE PLAN

I-69 SECTION 6.5 SANITARY SEWER CONFLICT RELOCATIONS
CEG PROJECT NO.: 92RE04119
DRAWING NUMBER
SS-13
XX OF XX

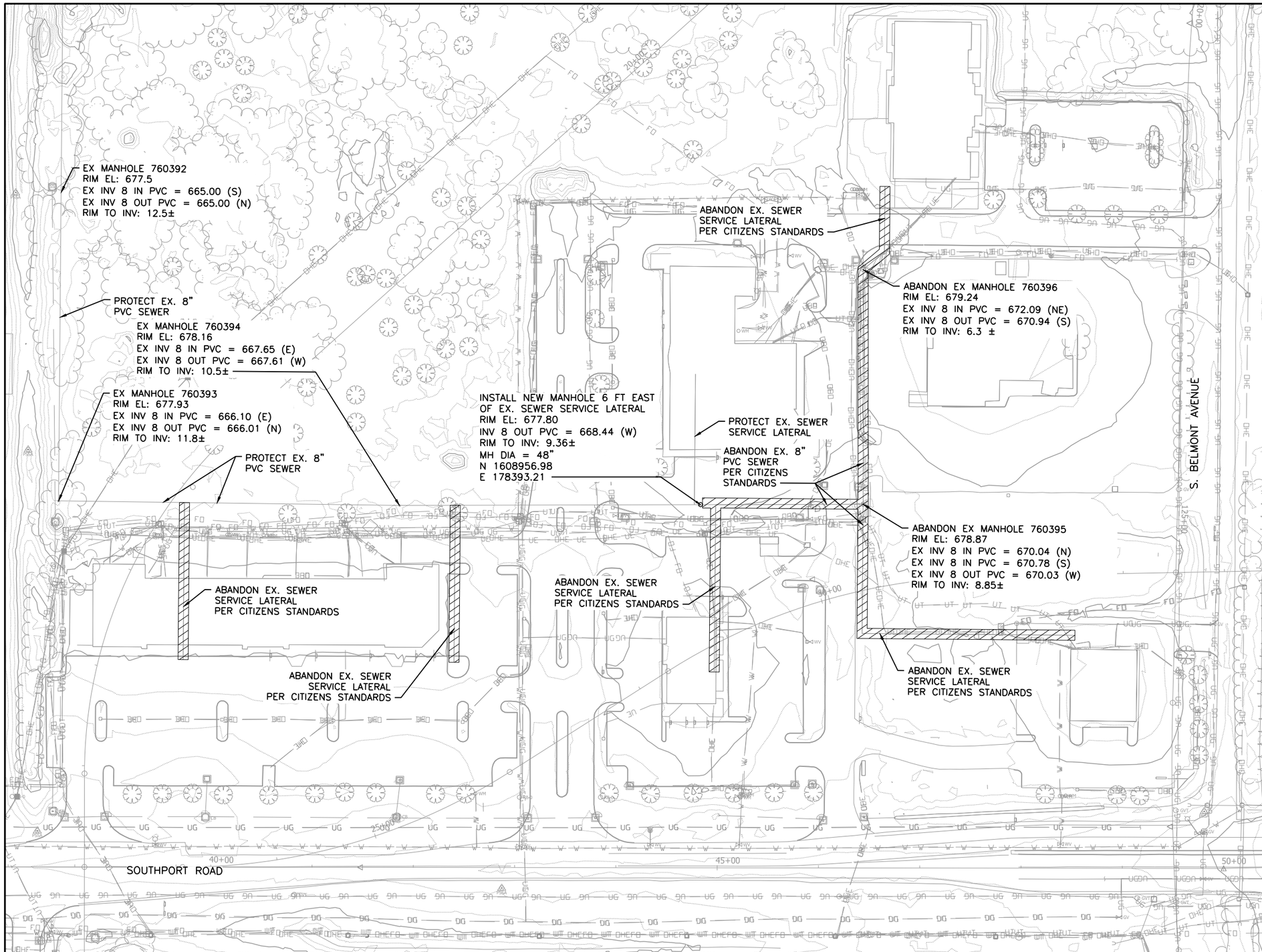

0' 50' 100'

LEGEND

TO BE ABANDONDED

NOTES:

1. CITIZENS 2020 SANITARY STANDARDS MANUAL SHALL BE REFERENCED AS NEEDED.

PLOTTED: SPA49354, 2/28/2020 3:38:15 PM
SAVED: SPA49354, 2/28/2020 3:38:49 PM
PW ID:

D403503
B&V PROJECT NUMBER: 403503

REVISIONS		
DATE	REVISION	BY
	90% DESIGN SUBMITTAL NOT FOR CONSTRUCTION	

citizens energy group

BLACK & VEATCH

RECOMMENDED FOR APPROVAL XX XX

DESIGNED: SJF DRAWN: MWF
CHECKED: JAG CHECKED: SJF

CITIZENS ENERGY GROUP

PROPOSED SEWER RELOCATION PLAN FOR CONFLICT #23 PROJECT AREA SITE PLAN

I-69 SECTION 6.5 SANITARY SEWER CONFLICT RELOCATIONS
CEG PROJECT NO.: 92RE04119
DRAWING NUMBER
SS-14
XX OF XX

INDIANA DEPARTMENT OF TRANSPORTATION
PERMIT SECTION – TRAFFIC CONTROL STANDARDS

Examples are for Short Term Stationary Work - 1 to 12 hours

Shoulder Work on Two Lane Roadway

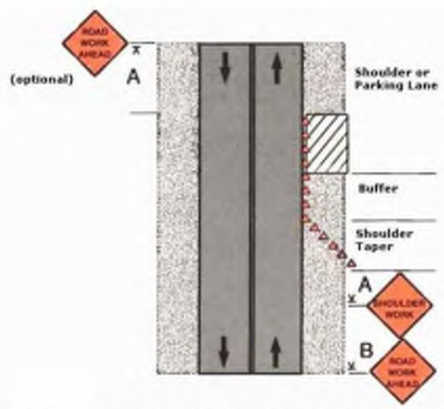

***Note: "Workers" or "Utility Work Ahead" signs may be used instead of the "Shoulder Work" or "Road Work Ahead" Signs

Shoulder Work on Multi-Lane Roadway

For Divided and Undivided Roadways

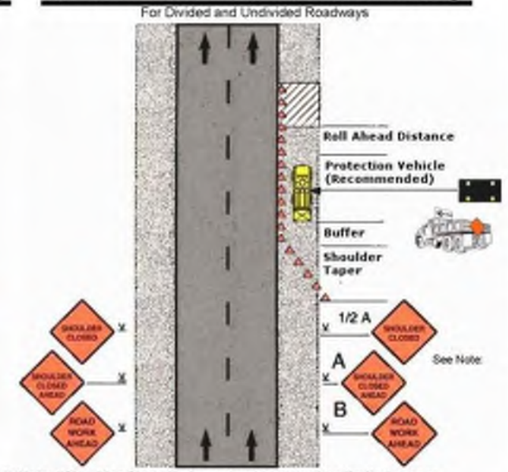

***Note: "Shoulder Closed" signs should be used on limited access highways where there is no opportunity for disabled vehicles to pull off the traveled way. Use "Shoulder Work" signs otherwise.

Lane Closure on Two Lane Roadway

Two flagmen operation shown

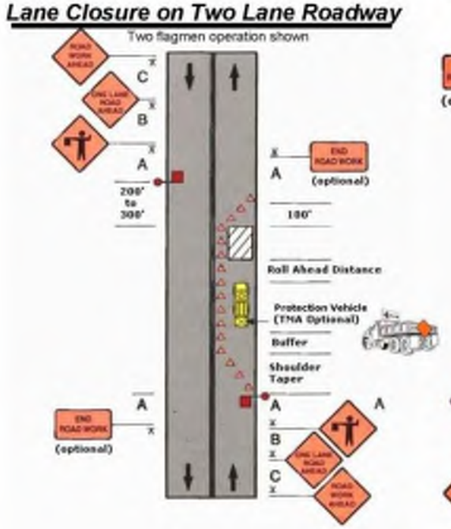

Lane Closure on Multi-Lane Roadway

For Divided and Undivided Roadways

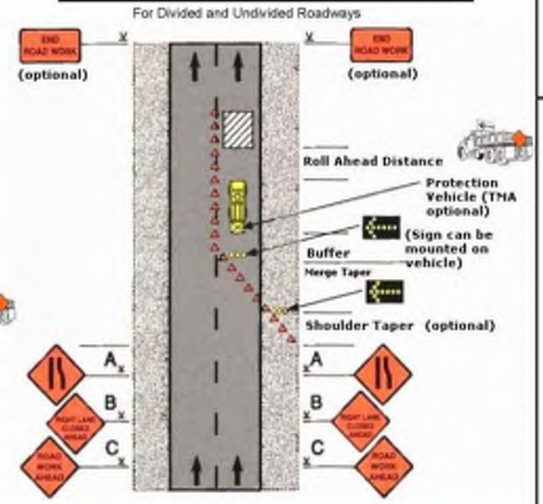

Protection Vehicles can NOT be work vehicles

LEGEND

FLAGMEN STANDARDS AND PROCEDURES

If flaggers are to be used they must be properly trained and equipped at all times.

******Only Stop/Slow paddles are allowed while flagging on State Right-Of-Way******

ACCEPTABLE CHANNELING DEVICES

1. Stripes on barricade rails slope degrees toward the direction downward at an angle of 45 traffic is to pass
2. Barricade rail stripe widths shall be 6 inches except where the rail lengths are less than 36 inches, then 4 inch wide stripes may be used.
3. The sides of the barricades facing traffic shall have retroflective rail faces.
4. All channelizing devices should meet National Highway Research Program (NCHRP) Report 350 Crash Test Requirements.
5. 20 ft. maximum spacing of channelizing devices on 2 lane roads
6. 40 ft. maximum spacing of channelizing devices on 4+ lane roads

DIMENSIONAL DISTANCE SPECIFICATIONS

Distances shown are approximate. Spacing and Distances should be adjusted for curves, hills, intersections, driveways, etc…, to improve sight visibility.

Speed mph	Buffer ft.
30	85
35	120
40	170
45	220
50	280
55	335
60	415
65	485

Taper Length	Cone Spacing	Cone Offset	# of Cones	Description
100'	20'	2'-5"	6	2-Way Tapers
200'	20'	1'-0"	12	Shoulder Tapers
340'	20'	0"-8"	18	Shifting Tapers, Low Speed Merging Tapers
780'	20'	0'-7"	21	Multi Lane Road Merging Tapers

	Sign Spacing			
	25-30 mph	35-40 mph	45-55 mph	55 + mph
A	200	350	500	1000
B	200	350	500	1600
C	200	350	500	2600

Roll Ahead	
Speed Mph	Dist.
0-45	150
50-55	200
60+	275

DISCLAIMER… The purpose of this document is to present guidelines for work zone traffic control. This covers the basic requirements set forth in Part VI of the Manual on Uniform Traffic Control Devices (MUTCD) as it pertains to Right-Of-Way Permit work. Any changes or additions of traffic control of protection can be requested per the INDOT District Permit Sections. This document MUST accompany the Right-Of-Way Permit Application. **Created by INDOT - February 2005**

PLOTTED: SPA49354, 2/6/2020 1:11:39 PM
SAVED: SPA49354, 2/6/2020 1:12:08 PM
PW ID:
D403503 B&V PROJECT NUMBER: 403503

REVISIONS		
DATE	REVISION	BY
	90% DESIGN SUBMITTAL NOT FOR CONSTRUCTION	

citizens energy group

BLACK & VEATCH

RECOMMENDED FOR APPROVAL XX XX

DESIGNED: SJF DRAWN: JWS
CHECKED: JAG CHECKED: SJF

CITIZENS ENERGY GROUP

MAINTENANCE OF TRAFFIC DETAILS

I-69 SECTION 6.5 SANITARY SEWER CONFLICT RELOCATIONS
CEG PROJECT NO.: 92RE04119
DRAWING NUMBER
MT-1
XX OF XX

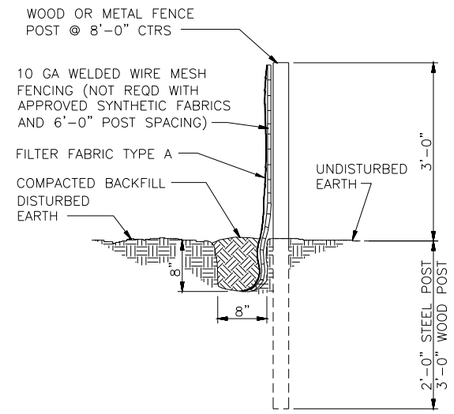

SILT FENCE (A)
NO SCALE

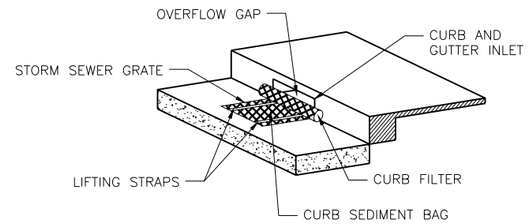

CURB INLET PROTECTION (E)
NO SCALE

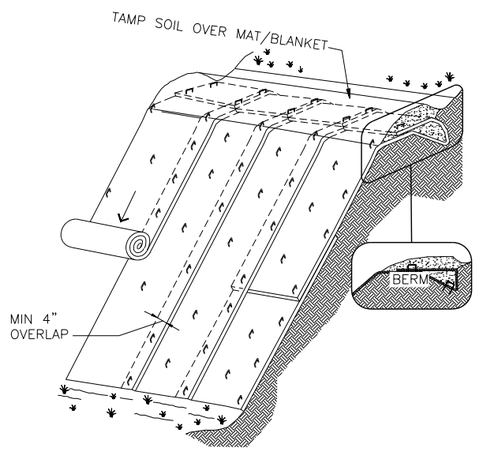

NOTES:
1. PREPARE SOIL BEFORE INSTALLING BLANKETS, INCLUDING APPLICATION OF LIME, FERTILIZER, AND SEED.WHEN USING CEEL-O-SEED, DO NOT SEED PREPARED AREA. CELL-O-SEED SHALL BE INSTALLED WITH PAPER SIDE DOWN.
2. BEGIN AT TOP OF SLOPE BY ANCHORING THE BLANKET IN 6" DEEP X 6" WIDE TRENCH. BACKFILL AND COMPACT TRENCH AFTER STAPLING.
3. ROLL BLANKET DOWN OR HORIZONTALLY ACROSS THE SLOPE.
4. THE EDGES OF PARALLEL BLANKETS SHALL BE STAPLED WITH APPROXIMATELY 4" OVERLAP.
5. WHEN BLANKETS MUST BE SPLICED DOWN THE SLOPE, PLACE BLANKETS END OVER END (SHINGLE STYLE) WITH APPROXIMATELY 4" OVERLAP. STAPLE THROUGH OVERLAPPED AREA, APPROXIMATELY 12" APART.
6. THE END OF THE BLANKET THAT FALLS BELOW NORMAL WATER LEVEL SHALL BE ANCHORED IN A 12" DEEP x 6" WIDE TRENCH. BACKFILL AND COMPACT THE TRENCH AFTER STAPLING THE BLANKET. STONE OR SOIL BACKFILL MAY BE USED.
7. STAPLE PATTERN SHALL BE AS RECOMMENDED BY THE BLANKET MANUFACTURER.

EROSION CONTROL BLANKET SLOPE INSTALLATION (B)
NO SCALE

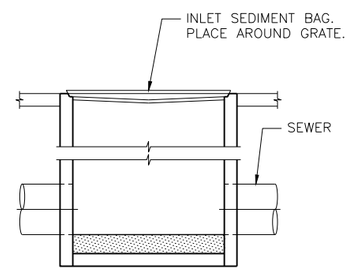

PAVED AREA INLET PROTECTION (F)
NO SCALE

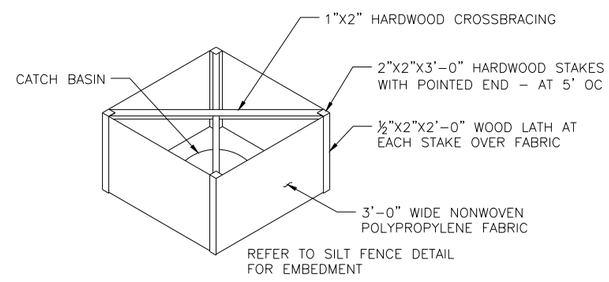

SILT FENCE INLET PROTECTION (G)
NO SCALE

PLOTTED: SPA49354, 2/6/2020 1:27:46 PM
SAVED: SPA49354, 2/6/2020 1:28:11 PM
PW ID:

D403503 B&V PROJECT NUMBER: 403503

REVISIONS		
DATE	REVISION	BY
	90% DESIGN SUBMITTAL NOT FOR CONSTRUCTION	

citizens energy group

BLACK & VEATCH

RECOMMENDED FOR APPROVAL XX XX

DESIGNED: SJF DRAWN: JWS
CHECKED: JAG CHECKED: SJF

CITIZENS ENERGY GROUP

EROSION AND SEDIMENTATION CONTROL DETAILS

I-69 SECTION 6.5 SANITARY SEWER CONFLICT RELOCATIONS
CEG PROJECT NO.: 92RE04119
DRAWING NUMBER
EC-1
XX OF XX

PERMANENT SEEDING

STANDARD PERMANENT SEED MIX

- 40% KENTUCKY BLUEGRASS
- 40% CREEPING RED FESCUE
- 20% OREGON PERENNIAL RYEGRASS

PERMANENT SEEDING NOTES

1. APPLY SEED UNIFORMLY. PLANT OR COVER SEED TO A DEPTH OF ONE-FOURTH TO ONE-HALF INCH. IF DRILLING OR BROADCASTING THE SEED, ENSURE GOOD SEED-TO-SOIL CONTACT BY FIRMING THE SEEDBED WITH A ROLLER OR CULTIPACKER AFTER COMPLETING SEEDING OPERATIONS. IF SEEDING IS DONE WITH A HYDROSEEDER, FERTILIZER AND MULCH CAN BE APPLIED WITH THE SEED IN A SLURRY MIXTURE.
2. MULCH ALL SEEDED AREAS AND USE APPROPRIATE METHODS TO ANCHOR THE MULCH IN PLACE.
3. AN OAT OR WHEAT COMPANION OR NURSE CROP MAY BE USED WITH ANY OF THE ABOVE PERMANENT SEEDING MIXTURES, AT THE FOLLOWING RATES:
   A. SPRING OATS – ONE-FOURTH TO THREE-FOURTHS BUSHEL PER ACRE.
   B. WHEAT – NO MORE THAN ONE-HALF BUSHEL PER ACRE.

PERMANENT SEEDING MAINTENANCE

1. MAINTENANCE OF THE SODDED AND/OR THE SEEDED AREAS SHALL CONSIST OF WATERING, WEEDING, CUTTING, TRIMMING AND A MINIMUM OF TWO APPLICATIONS OF FERTILIZER FOR THE GRASS AS NECESSARY FOR OBTAINING AND KEEPING OF A SOUND WEED-FREE TURF ACCORDING TO SECTION 621 OF THE INDOT STANDARD SPECIFICATIONS. THIS REQUIREMENT OF MAINTENANCE SHALL CONTINUE UNTIL, IN ENGINEER'S OPINION, A SATISFACTORY TURF IS ESTABLISHED, BUT IN NO CASE LESS THAN THREE MONTHS FROM THE DATE OF ACCEPTANCE.
2. NEW SODDED AND SEEDED AREAS SHALL BE MAINTAINED AT A BLADE LENGTH OF BETWEEN TWO INCHES AND THREE INCHES.

TEMPORARY SEEDING

INDOT SPECIFICATION 621.06

SPRING MIX

- 280 SPRING MIX SHALL BE USED FROM MARCH 15 TO JUNE 15. THIS MIXTURE SHALL BE APPLIED AT THE RATE OF 150 LB/ACRE (168 kg/ha). THE MIX SHALL CONSIST OF OATS.

FALL MIX

- FALL MIX SHALL BE USED FROM SEPTEMBER 1 THROUGH NOVEMBER 30. THIS MIXTURE SHALL BE APPLIED AT THE RATE OF 150 LB/ACRE (168 kg/ha). THE MIX SHALL CONSIST OF WINTER WHEAT.

TEMPORARY SEEDING NOTES

1. APPLY SEED UNIFORMLY WITH A DRILL OR CULTIPACKER SEEDER OR BY BROADCASTING. PLANT OR COVER SEED TO THE DEPTH SHOWN IN THE TEMPORARY SEEDING CHART.
2. IF DRILLING OR BROADCASTING THE SEED, ENSURE GOOD SEED-TO-SOIL CONTACT BY FIRMING THE SEEDBED WITH A ROLLER OR CULTIPACKER AFTER COMPLETING SEEDING OPERATIONS.
3. DAILY SEEDING WHEN THE SOIL IS MOIST IS USUALLY MOST EFFECTIVE.
4. APPLY MULCH AND ANCHOR IT IN PLACE.

TEMPORARY SEEDING MAINTENANCE

1. INSPECT WITHIN 24 HOURS OF EACH RAIN EVENT AND AT LEAST ONCE EVERY SEVEN CALENDAR DAYS.
2. CHECK FOR EROSION OR MOVEMENT OF MULCH AND REPAIR IMMEDIATELY.
3. MONITOR FOR EROSION DAMAGE AND ADEQUATE COVER (MINIMUM 75 PERCENT MULCH COVERAGE); RESEED, FERTILIZE, AND APPLY MULCH WHERE NECESSARY.
4. IF NITROGEN DEFICIENCY IS APPARENT, TOP-DRESS FALL SEEDED WHEAT OR RYE SEEDING WITH 50 POUNDS PER ACRE OF NITROGEN IN FEBRUARY OR MARCH.
5. APPLY SOIL AMENDMENTS AS RECOMMENDED BY THE SOIL TEST AND WORK INTO THE UPPER TWO TO FOUR INCHES OF SOIL. IF TESTING IS NOT DONE, APPLY 400 TO 600 POUNDS PER ACRE OF 12-12-12 ANALYSIS FERTILIZER, OR EQUIVALENT.

MULCHING NOTES

1. SPREAD THE MULCH MATERIAL UNIFORMLY. AFTER SPREADING, NO MORE THAN 25 PERCENT OF THE GROUND SHOULD BE VISIBLE.
2. ANCHOR STRAW OR HAY MULCH IMMEDIATELY AFTER APPLICATION.

MULCHING MAINTENANCE

1. INSPECT WITHIN 24 HOURS OF EACH RAIN EVENT AND AT LEAST ONCE EVERY SEVEN CALENDAR DAYS.
2. CHECK FOR EROSION OR MOVEMENT OF MULCH; REPAIR DAMAGED AREAS, RESEED, APPLY NEW MULCH AND ANCHOR THE MULCH IN PLACE.
3. CONTINUE INSPECTIONS UNTIL VEGETATION IS FIRMLY ESTABLISHED.
4. IF EROSION IS SEVERE OR RECURRING, USE EROSION CONTROL BLANKETS OR OTHER MORE SUBSTANTIAL STABILIZATION METHODS TO PROTECT THE AREA.

CONSTRUCTION ENTRANCE MAINTENANCE

1. INSPECT CONSTRUCTION ENTRANCE WEEKLY AND AFTER STORM EVENTS OR HEAVY USE.
2. RESHAPE ENTRANCE AS NEEDED FOR DRAINAGE AND RUNOFF CONTROL.
3. TOP DRESS WITH CLEAN STONE AS NEEDED.
4. REPAIR ANY BROKEN PAVEMENT WITHIN RIGHT-OF-WAY IMMEDIATELY.

EROSION CONTROL BLANKET MAINTENANCE

1. DURING VEGETATIVE ESTABLISHMENT INSPECT AFTER STORM EVENTS FOR ANY EROSION BELOW THE BLANKET.
2. IF ANY AREA SHOWS EROSION PULL BACK THAT PORTION OF THE BLANKET COVERING IT, ADD SOIL, RESEED THE AREA, AND RE-LAY AND STAPLE THE BLANKET.
3. AFTER VEGETATIVE ESTABLISHMENT, CHECK THE TREATED AREA WEEKLY.

SILT FENCE MAINTENANCE

1. INSPECT THE SILT FENCE PERIODICALLY AND AFTER EACH STORM EVENT.
2. IF FABRIC TEARS, STARTS TO DECOMPOSE, OR IN ANY WAY BECOMES INEFFECTIVE, REPLACE THE AFFECTED PORTION IMMEDIATELY.
3. REMOVE DEPOSITED SEDIMENT WHEN IT REACHES HALF THE HEIGHT OF THE FENCE AT ITS LOWEST POINT OR IS CAUSING THE FABRIC TO BULGE.
4. TAKE CARE TO AVOID UNDERMINING THE FENCE DURING CLEAN OUT.
5. AFTER THE CONTRIBUTING DRAINAGE AREA HAS BEEN STABILIZED REMOVE THE FENCE AND SEDIMENT DEPOSITS, BRING THE DISTURBED AREA TO GRADE, AND STABILIZE.

INLET PROTECTION MAINTENANCE

1. INSPECT FREQUENTLY FOR DAMAGE BY VEHICULAR TRAFFIC AND REPAIR IF NEEDED.
2. INSPECT AFTER EACH STORM EVENT.
3. REMOVE SEDIMENT WHEN IT REACHES HALF THE HEIGHT OF THE BARRIER.
4. DEPOSIT SEDIMENT WHERE IT WILL NOT ENTER STORM DRAIN.

SOIL EROSION CONTROL NOTES

1. CONTRACTOR SHALL COMPLY WITH ALL STATE AND LOCAL ORDINANCES THAT APPLY.
2. THIS PLAN SHALL NOT BE CONSIDERED ALL INCLUSIVE. CONTRACTOR SHALL TAKE ALL NECESSARY PRECAUTIONS TO PREVENT SEDIMENT FROM LEAVING THE SITE.
3. ADDITIONAL EROSION AND SEDIMENT CONTROL MEASURES SHALL BE INSTALLED IF DEEMED NECESSARY BY ONSITE INSPECTION BY THE LOCAL REVIEWING AUTHORITY.
4. WASTES AND UNUSED BUILDING MATERIALS SHALL NOT BE ALLOWED TO BE CARRIED FROM THE SITE BY STORM WATER RUNOFF. PROPER DISPOSAL OF ALL WASTES AND UNUSED BUILDING MATERIALS IS REQUIRED.
5. SEDIMENT BEING TRACKED ONTO PUBLIC OR PRIVATE ROADWAYS SHALL BE MINIMIZED.
6. EXISTING VEGETATION SHALL BE PRESERVED IN AREAS NOT DISTURBED BY CONSTRUCTION ACTIVITY.
7. ANY OFFSITE BORROW OR DISPOSAL SHOULD BE DONE IN AN APPROVED MANNER IN ACCORDANCE WITH 327 IAC 15-5 (RULE 5). OFFSITE BORROW OR DISPOSAL AREAS MAY REQUIRE A SEPARATE RULE 5 PERMIT.
8. IF SOIL STOCKPILES WILL BE LEFT FOR A PERIOD OF LONGER THAN 15 DAYS, THEY SHALL BE STABILIZED WITH TEMPORARY SEED MIX AND SURROUNDED BY SILT FENCE.
9. ALL APPLICABLE EROSION CONTROL MEASURES SHALL BE IN PLACE BEFORE ANY LAND DISTURBING ACTIVITIES AND AT THE APPROPRIATE PHASES OF CONSTRUCTION..
10. CONTRACTOR SHALL ENSURE THAT ALL APPLICABLE EROSION AND SEDIMENT CONTROL MEASURES ARE IN PLACE
11. UNVEGETATED AREAS THAT ARE SCHEDULED OR LIKELY TO BE LEFT INACTIVE FOR 15 DAYS OR MORE MUST BE TEMPORARILY OR PERMANENTLY SEEDED. ALTERNATIVE STABILIZATION METHODS ARE ACCEPTABLE IF THEY ARE ADEQUATE TO PREVENT SEDIMENT EROSION.
12. ANY DEWATERING ACTIVITIES SHALL BE PERFORMED IN A MANNER THAT WILL NOT DISCHARGE SEDIMENT LADEN WATER INTO STREAMS OR SEWERS. SEDIMENT LADEN WATER SHALL BE FILTERED THROUGH A PUMP DISCHARGE FILTER DEVICE SUCH AS A PUMP DISCHARGE BAG. PUMP DISCHARGE SHALL BE PLACED IN AN AREA THAT WILL NOT CAUSE EROSION AT THE OUTLET.
13. IF CONTRACTOR WORKS OUTSIDE THE ESTABLISHED CONSTRUCTION LIMITS, ADDITIONAL EROSION CONTROL MEASURES MAY BE REQUIRED. CONTRACTOR IS RESPONSIBLE FOR ANY WORK OUTSIDE THE CONSTRUCTION LIMITS AT NO COST TO THE OWNER.
14. A NOTICE OF INTENT (NOI) MUST BE SUBMITTED TO INDIANA DEPARTMENT OF ENVIRONMENTAL MANAGEMENT (IDEM) A MINIMUM OF 48 HOURS PRIOR TO INITIATION OF LAND DISTURBING ACTIVITIES IN ACCORDANCE WITH RULE 5. THE NOI MUST INCLUDE THE FOLLOWING ATTACHMENTS: PROOF OF PUBLICATION, PERMIT FILING FEE, AND PLAN REVIEW VERIFICATION. A COPY OF THE NOI SHALL BE SUBMITTED TO MARION COUNTY SOIL AND WATER CONSERVATION DISTRICT.
15. A SEPARATE NOI LETTER IS REQUIRED FOR EACH SUBMITTED CONSTRUCTION PLAN.
16. CONTRACTOR SHALL POST A NOTICE NEAR THE MAIN ENTRANCE OF THE PROJECT SITE. THE NOTICE SHALL INCLUDE A COPY OF THE COMPLETED NOI, LOCAL CONTACT INFORMATION, AND LOCATION OF THE CONSTRUCTION PLANS.
17. THE CONTRACTOR SHALL DEVELOP A SELF-MONITORING PROGRAM TO ENSURE PROPER MAINTENANCE AND FUNCTION OF STORMWATER POLLUTION PREVENTION MEASURES. A WRITTEN EVALUATION SHOULD BE PERFORMED BY THE END OF THE NEXT BUSINESS DAY AFTER EACH MEASURABLE STORM EVENT, AND AT A MINIMUM OF ONE TIME PER WEEK. WRITTEN EVALUATION SHALL INCLUDE THE NAME OF THE INDIVIDUAL PERFORMING THE EVALUATION, DATE OF THE EVALUATION, PROBLEMS IDENTIFIED AT THE SITE, AND DETAILS OF CORRECTIVE ACTIONS RECOMMENDED AND COMPLETED. MONITORING SHOULD BE PERFORMED BY AN INDIVIDUAL TRAINED IN EROSION AND SEDIMENT CONTROL PRACTICES.

MATERIAL HANDLING AND SPILL PREVENTION PLAN

MATERIALS PRESENT ONSITE THAT MAY BE POTENTIALLY HAZARDOUS WILL INCLUDE WASTES, EXCESS BUILDING MATERIALS, AND FUELS AND LUBRICANTS REQUIRED FOR CONSTRUCTION EQUIPMENT. THESE ITEMS SHALL NOT BE ALLOWED TO BE CARRIED FROM THE SITE BY STORMWATER RUNOFF. CONTRACTOR SHALL DISPOSE OF EXCESS BUILDING MATERIALS AND CONTAINERS AT AN OFFSITE LOCATION. CONSTRUCTION VEHICLES SHALL BE SERVICED IN AREAS THAT WILL MINIMIZE IMPACTS IN THE OCCURRENCE OF A SPILL OR LEAK. SHOULD A SPILL OCCUR, CONTRACTOR SHALL MAKE ALL EFFORTS TO CONTAIN AND CLEAN THE SPILL, AND DISPOSE OF CONTAMINATED MATERIALS/SOIL IN AN APPROVED MANNER. ALL SPILLS SHOULD BE REPORTED TO THE INDIANA DEPARTMENT OF ENVIRONMENTAL MANAGEMENT'S EMERGENCY RESPONSE HOT LINE AT 1-888-233-7745. CONTRACTOR SHALL ADHERE TO THE INDIANA SPILL RULE AS REQUIRED IN 327 IAC 2-6.1.

SEQUENCE DESCRIBING STORMWATER QUALITY MEASURES RELATIVE TO LAND DISTURBING ACTIVITIES

1. INSTALL SILT FENCE AND INLET PROTECTION AS INDICATED ON PLANS PRIOR TO LAND DISTURBANCE.
2. PERFORM EXCAVATION AND CONSTRUCTION WORK.
3. INSTALL EROSION CONTROL BLANKET AND TEMPORARY SEED ON DISTURBED AREAS AS THE TRENCH IS CLOSED. SEEDED AREAS NOT PROTECTED WITH EROSION CONTROL BLANKET SHALL BE HYDROSEEDED OR COVERED WITH ANCHORED MULCH.
4. PERFORM FINAL GRADING AND ASPHALT REPLACEMENT WHERE NECESSARY.
5. INSTALL PERMANENT SEED ON ALL AREAS DISTURBED BY THE PROJECT. REAPPLY ANCHORED MULCH WHERE NECESSARY.
6. REMOVE TEMPORARY EROSION CONTROL PRACTICES WHEN ALL AREAS OF THE SITE HAVE BEEN STABILIZED WITH AT LEAST 70% VEGETATIVE COVER.

PLOTTED: SPA49354, 2/6/2020 1:26:51 PM
SAVED: SPA49354, 2/6/2020 1:27:10 PM
PW ID:
D403503
B&V PROJECT NUMBER: 403503

REVISIONS		
DATE	REVISION	BY
	90% DESIGN SUBMITTAL NOT FOR CONSTRUCTION	

citizens energy group

BLACK & VEATCH

RECOMMENDED FOR APPROVAL XX XX

DESIGNED: SJF DRAWN: JWS
CHECKED: JAG CHECKED: SJF

CITIZENS ENERGY GROUP

EROSION AND SEDIMENTATION CONTROL NOTES

I-69 SECTION 6.5 SANITARY SEWER CONFLICT RELOCATIONS
CEG PROJECT NO.: 92RE04119
DRAWING NUMBER
EC-2
XX OF XX

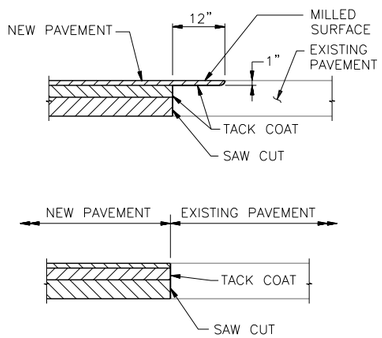

PAVEMENT INTERFACE (A)
NO SCALE

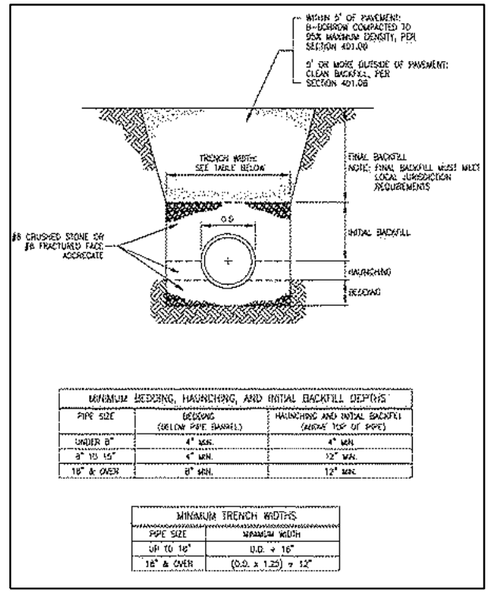

MINIMUM BEDDING, HAUNCHING, AND INITIAL BACKFILL DEPTHS		
PIPE SIZE	BEDDING (BELOW PIPE BARREL)	HAUNCHING AND INITIAL BACKFILL (ABOVE TOP OF PIPE)
UNDER 8"	4" MIN.	4" MIN.
8" TO 15"	4" MIN.	12" MIN.
16" & OVER	8" MIN.	12" MIN.

MINIMUM TRENCH WIDTHS	
PIPE SIZE	MINIMUM WIDTH
UP TO 16"	O.D. + 16"
18" & OVER	(O.D. x 1.25) + 12"

FLEXIBLE PIPE BEDDING AND BACKFILL REQUIREMENTS (B)
NO SCALE

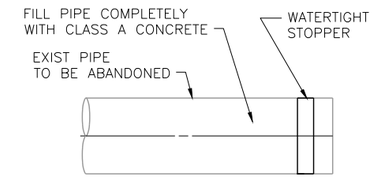

NOTE:
ALL ABANDONED IN PLACE PIPING SHALL HAVE ENDS PLUGGED

SEWER PLUG (D)
NO SCALE

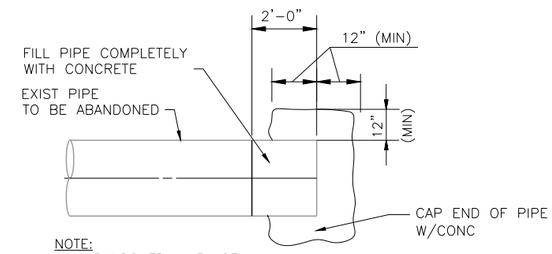

NOTE:
ALL ABANDONED IN PLACE PIPING SHALL HAVE ENDS CAPPED

CONCRETE PIPE CAP (E)
NO SCALE

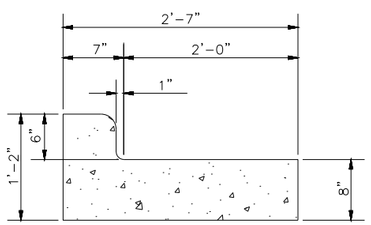

COMBINED CONCRETE CURB AND GUTTER (F)
NO SCALE

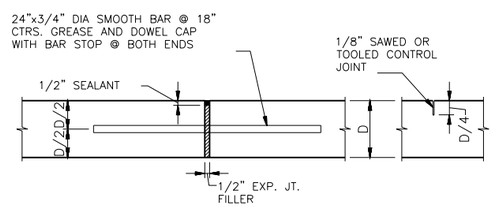

EXPANSION JOINT CONTROL JOINT

CONCRETE CURB JOINTS (G)
NO SCALE

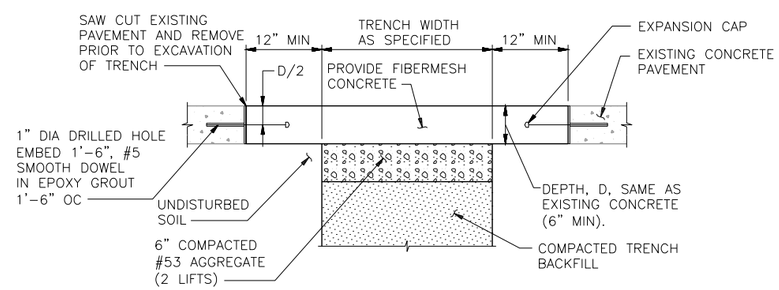

CONCRETE DRIVEWAY REPAIR (H)
NO SCALE

PLOTTED: SPA49354, 2/6/2020 4:40:58 PM
SAVED: SPA49354, 2/6/2020 4:41:15 PM
PW ID:

D403503
B&V PROJECT NUMBER: 403503

REVISIONS		
DATE	REVISION	BY
	90% DESIGN SUBMITTAL NOT FOR CONSTRUCTION	

citizens energy group

BLACK & VEATCH

RECOMMENDED FOR APPROVAL XX XX

DESIGNED: SJF DRAWN: JWS
CHECKED: JAG CHECKED: SJF

CITIZENS ENERGY GROUP

DETAILS
MISCELLANEOUS DETAILS

I-69 SECTION 6.5 SANITARY SEWER CONFLICT RELOCATIONS
CEG PROJECT NO.: 92RE04119
DRAWING NUMBER
DT-1
XX OF XX

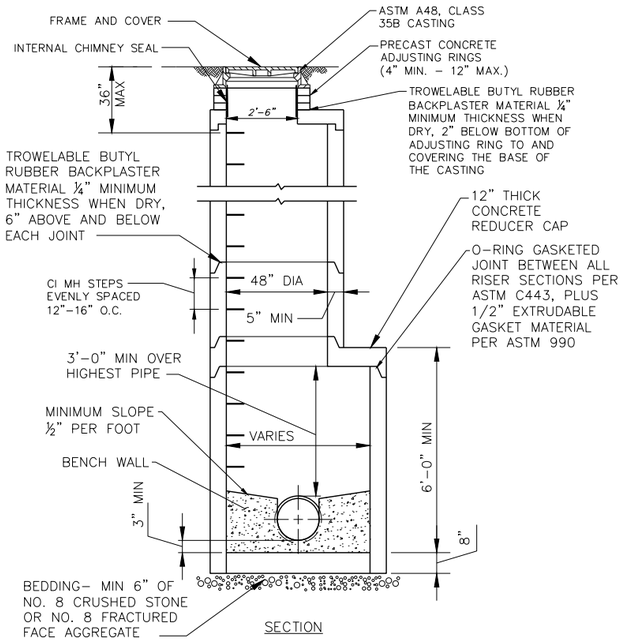

MANHOLE BASE AND RISER (A)
NO SCALE

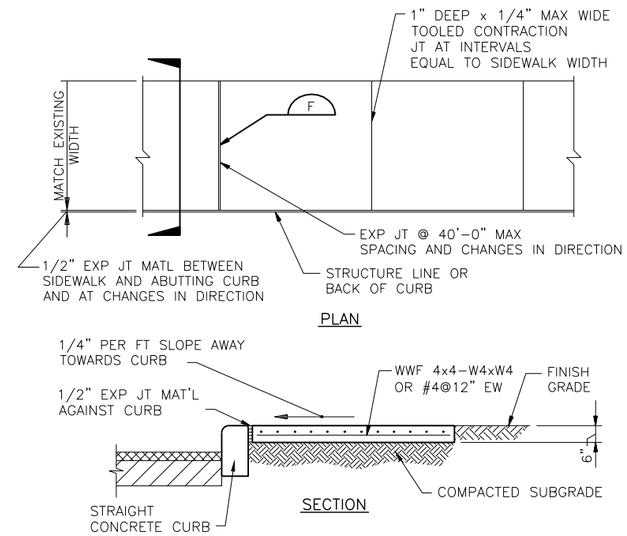

TYPICAL CONCRETE SIDEWALK (B)
NO SCALE

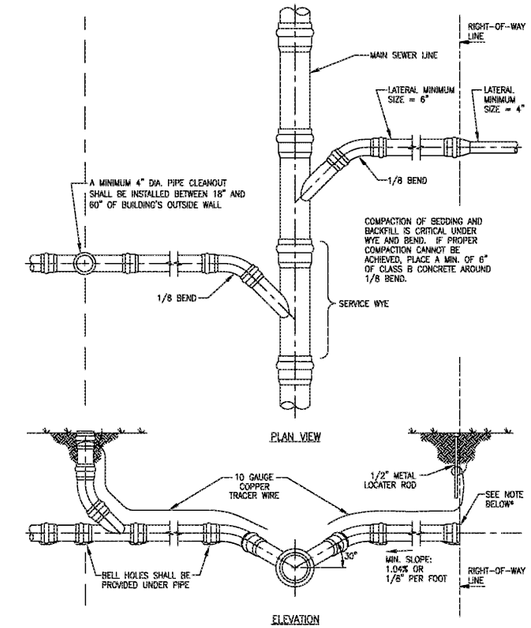

SERVICE CONNECTION FOR SHALLOW SEWERS (C)
NO SCALE

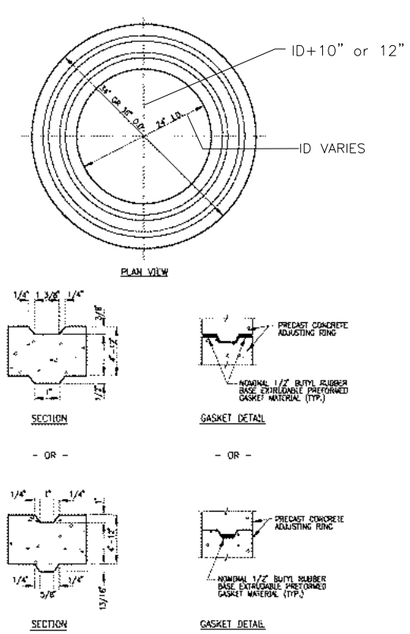

ADJUSTING RING (F)
NO SCALE

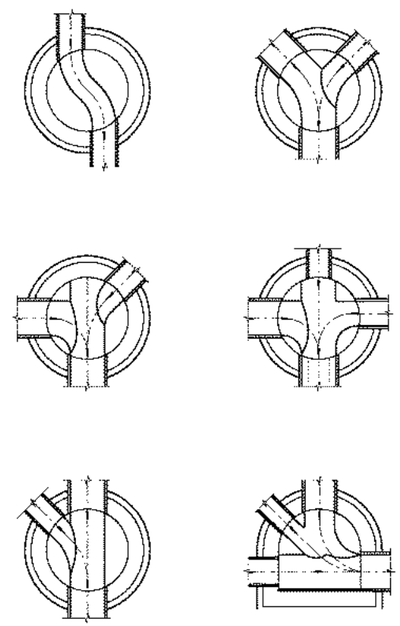

STANDARD MANHOLE BENCHES (G)
NO SCALE

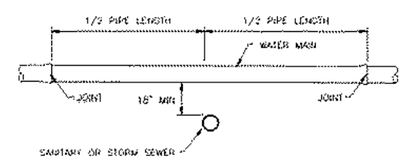

WATER MAIN CROSSING SEWER SECTION VIEW (H)
NO SCALE

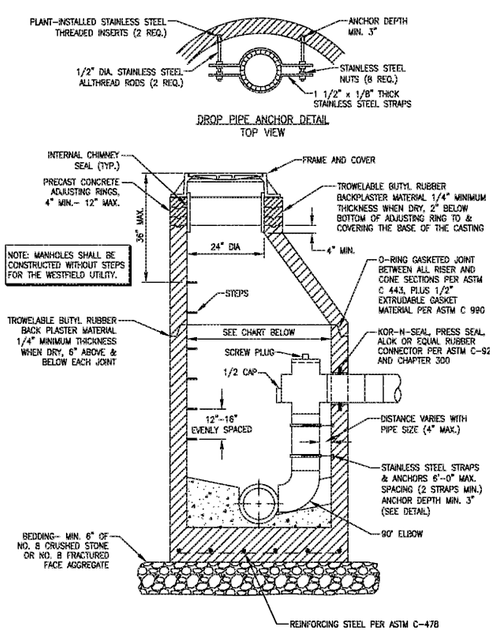

SANITARY SEWER DOGHOUSE MANHOLE (J)
NO SCALE

PLOTTED: SPA49354, 2/6/2020 4:42:13 PM
SAVED: SPA49354, 2/6/2020 4:43:56 PM
PW ID:

D403503
B&V PROJECT NUMBER: 403503

REVISIONS		
DATE	REVISION	BY
	90% DESIGN SUBMITTAL NOT FOR CONSTRUCTION	

citizens energy group

BLACK & VEATCH

RECOMMENDED FOR APPROVAL XX XX

DESIGNED: SJF DRAWN: JWS
CHECKED: JAG CHECKED: SJF

CITIZENS ENERGY GROUP

DETAILS
MISCELLANEOUS DETAILS

I-69 SECTION 6.5 SANITARY SEWER CONFLICT RELOCATIONS
CEG PROJECT NO.: 92RE04119
DRAWING NUMBER
DT-2
XX OF XX