PROJECT	DESIGNATION
0501212	1592568 & 1592576
CONTRACT	BRIDGE FILE
R-28940	I65-054-04653 CNBL & CSBL

INDIANA DEPARTMENT OF TRANSPORTATION

TRAFFIC DATA	I-65
A.D.T. (2019)	31,320 V.P.D.
A.D.T. (2039)	34,310 V.P.D.
D.H.V. (2039)	2,740 V.P.H.
DIRECTIONAL DISTRIBUTION	50%
TRUCKS	38% A.A.D.T.
	29% D.H.V.
DESIGN DATA	
DESIGN SPEED	70 M.P.H.
PROJECT DESIGN CRITERIA	PARTIAL RECONSTRUCTION 4R (FREEWAY)
FUNCTIONAL CLASSIFICATION	INTERSTATE
RURAL/URBAN	RURAL
TERRAIN	LEVEL
ACCESS CONTROL	FULL

INDEX

STRUCTURE	TYPE	SPAN AND SKEW	OVER	STATION
I65-054-04653 CNBL I65-054-04653 CSBL	BRIDGE REHABILITATION TWIN CONTINUOUS PRESTRESSED CONCRETE I-BEAM BRIDGES	7 SPANS: 46'-5 1/2", 5 @ 43'-5 5/8", 46'-5 1/2" SKEW: 30°00'00" LEFT	EAST FORK WHITE RIVER, OVERFLOW 2	STA. 2475+66.75 "A"

KIN DESIGNATION NUMBERS

PART	DESIGNATION	DESCRIPTION
1	0501212	I-65 ROAD PLANS
2	0501212	I-65 CROSS SECTIONS
3	0501212	I-65 TRAFFIC PLANS
4	1601732 & 1601733	I-65 OVER CSX RAILROAD
5	1592538 & 1592536	I-65 OVER MUTTON CREEK DITCH
6	1601840 & 1601970	I-65 OVER EAST FORK OF WHITE RIVER
7	1601841 & 1601920	I-65 OVER EAST FORK OF WHITE RIVER, OVERFLOW NO. 1
8	1592568 & 1592576	I-65 OVER EAST FORK OF WHITE RIVER, OVERFLOW NO. 2
9	1592575 & 1592589	I-65 OVER EAST FORK OF WHITE RIVER, OVERFLOW NO. 3
10	1592590 & 1592592	I-65 OVER L & I RAILROAD
11	1592595 & 1592594	I-65 OVER ABLE DITCH
12	1592600 & 1592599	I-65 OVER SMALLS CREEK
13	1700256	ENOS ROAD OVER I-65
13	1700257	CR 800 NORTH OVER I-65
13	1700258	REDDING ROAD OVER I-65
13	1700259	SR 11 OVER I-65
13	1700260	COUNTYLINE ROAD OVER I-65
13	1700261	CR 950 SOUTH OVER I-65
13	1700262	CR 625 SOUTH OVER I-65
14	1383528 & 1383529	I-65 OVER DENOIS CREEK

R-28940
Part 8 of 14

BRIDGE REHABILITATION PLANS

FOR SPANS OVER 20 FEET
INTERSTATE 65
OVER
EAST FORK OF WHITE RIVER, OVERFLOW 2

PROJECT NO. 0501212 P.E.

PROJECT NO. 0501212 CONST.

RP 54+0.823

This Bridge Rehabilitation is on Interstate 65 over East Fork of White River, Overflow 2, Located in Section 29, of Township 7 North, Range 6 East, Redding Township, in Jackson County Indiana.

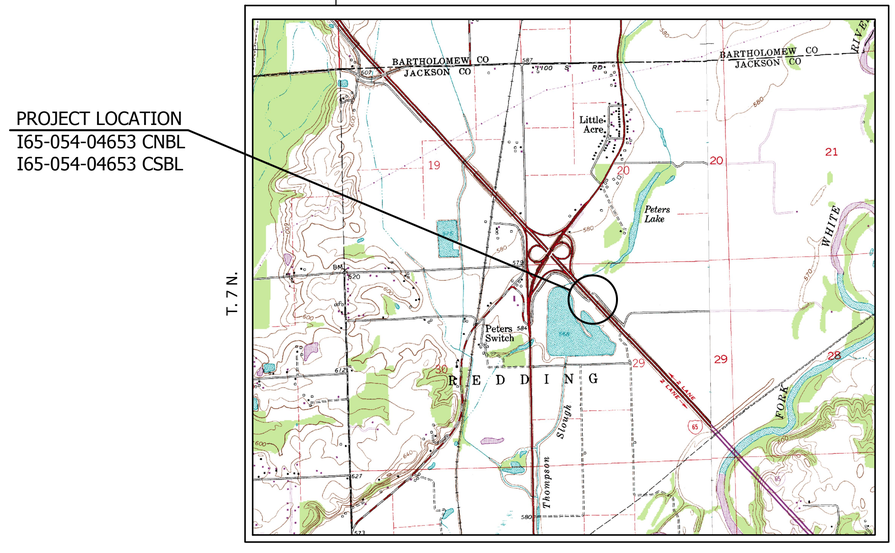

LOCATION MAP

Scale 1" = 2000'

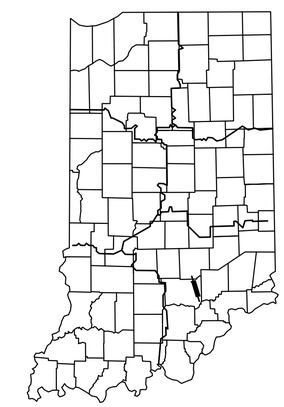

PROJECT LOCATION SHOWN BY
JACKSON COUNTY

LATITUDE: 39°01'24.42" N LONGITUDE: 85°53'07.88" W

BRIDGE LENGTH :	0.54 MI.
ROADWAY LENGTH :	13.71 MI.
TOTAL LENGTH :	14.25 MI.
MAX GRADE:	2.8%

[INDIANA DEPARTMENT OF TRANSPORTATION STANDARD SPECIFICATIONS DATED 2016 TO BE USED WITH THESE PLANS]

UNITED Consulting
1625 N. Post Road
Indianapolis, Indiana 46219
Phone: 317-895-2585
Fax: 317-895-2596 Web: www.ucindy.com

PLANS PREPARED BY: UNITED CONSULTING 317-895-2585
PHONE NUMBER

CERTIFIED BY: DATE

APPROVED FOR LETTING: INDIANA DEPARTMENT OF TRANSPORTATION DATE

BRIDGE FILE	
I65-054-04653 CNBL & CSBL	
DESIGNATION	
1592568 & 1592576	
SURVEY BOOK	SHEETS
	1 of 10
CONTRACT	PROJECT
R-28940	0501212

File Name: P:\C3D\MK16-465\Bridge\Bridges 14 & 15 - I-65 over Overflow No 2\Dwg\Title 14 & 15.dwg Plot Date: 4/25/2017 Plotted By: Zola, David

UTILITIES

GENERAL NOTES

INDEX

SHEET NO.	DESCRIPTION
1	TITLE
2	INDEX
3-4	MOT DETAILS
5	LAYOUT
6-7	GENERAL PLAN
8	BENT DETAILS
9	PIER DETAILS
10	BRIDGE SUMMARY

REVISIONS

SHEET No.	DATE	REVISION

Indiana811

Know what's below. Call before you dig.

CALL TWO WORKING DAYS BEFORE YOU DIG

Call 811 or 800-382-5544

UNITED Consulting

1625 N. Post Road
Indianapolis, IN 46219
Phone 317-895-2585
Fax 317-895-2596
www.ucindy.com

RECOMMENDED FOR APPROVAL

DESIGN ENGINEER DATE

DESIGNED: MRL DRAWN: DJZ

CHECKED: BSF CHECKED: MRL

INDIANA
DEPARTMENT OF TRANSPORTATION

INDEX
I-65 OVER EFWR, OVERFLOW 2

HORIZONTAL SCALE	BRIDGE FILE
N/A	I65-054-04653 CNBL & CSBL
VERTICAL SCALE	DESIGNATION
N/A	1592568 & 1592576
SURVEY BOOK	SHEETS
-	2 of 10
CONTRACT	PROJECT
R-28940	0501212

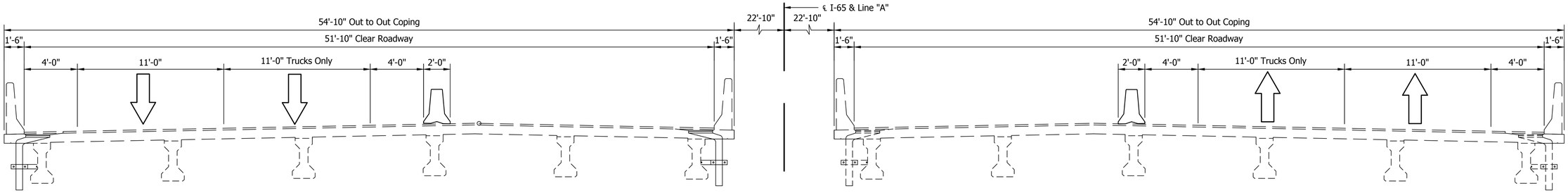

I-65 Southbound

I-65 Northbound

PHASE 2

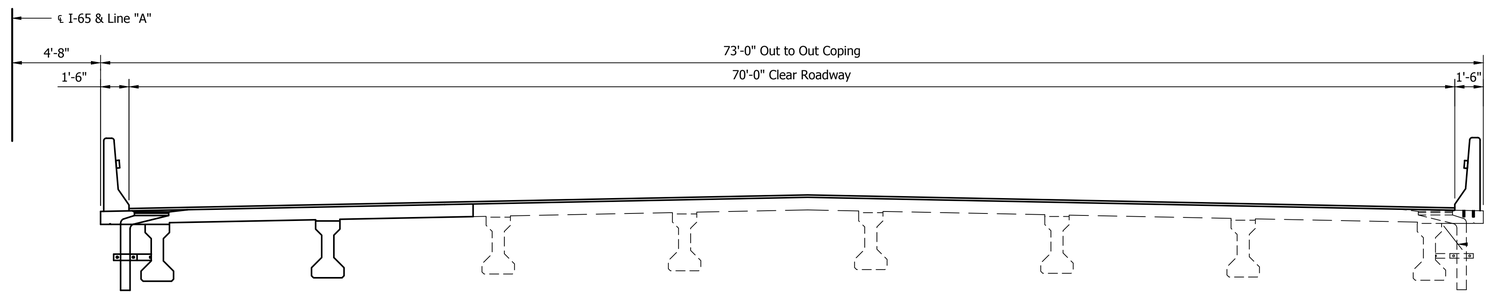

I-65 Northbound

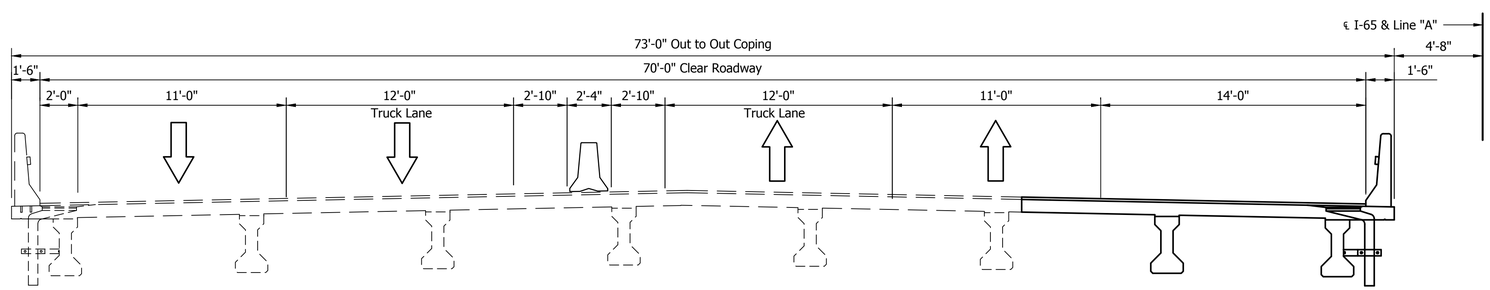

I-65 Southbound

PHASE 3

UNITED Consulting
1625 N. Post Road
Indianapolis, IN 46219
Phone 317-895-2585
Fax 317-895-2596
www.ucindy.com

RECOMMENDED FOR APPROVAL
DESIGN ENGINEER DATE

DESIGNED: MRL DRAWN: DJZ
CHECKED: BSF CHECKED: MRL

INDIANA
DEPARTMENT OF TRANSPORTATION

MAINTENANCE OF TRAFFIC
I-65 OVER EFWR, OVERFLOW 2

HORIZONTAL SCALE	BRIDGE FILE
1/4" = 1'-0"	I65-054-04653 CNBL & CSBL
VERTICAL SCALE	DESIGNATION
1/4" = 1'-0"	1592568 & 1592576
SURVEY BOOK	SHEETS
-	3 of 10
CONTRACT	PROJECT
R-28940	0501212

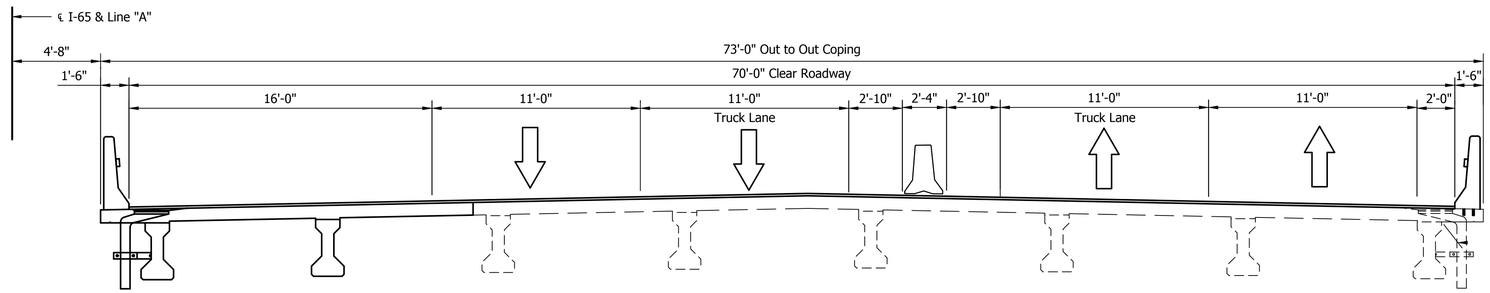

I-65 Northbound

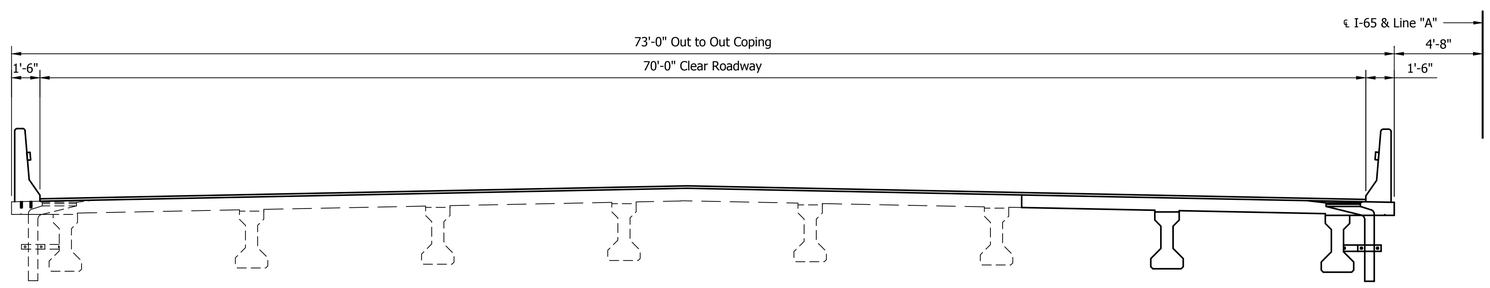

I-65 Southbound

PHASE 4

UNITED Consulting
1625 N. Post Road
Indianapolis, IN 46219
Phone 317-895-2585
Fax 317-895-2596
www.ucindy.com

RECOMMENDED FOR APPROVAL _____ DESIGN ENGINEER DATE

DESIGNED: MRL DRAWN: DJZ

CHECKED: BSF CHECKED: MRL

INDIANA
DEPARTMENT OF TRANSPORTATION

MAINTENANCE OF TRAFFIC
I-65 OVER EFWR, OVERFLOW 2

HORIZONTAL SCALE	BRIDGE FILE
1/4" = 1'-0"	I65-054-04653 CNBL & CSBL
VERTICAL SCALE	DESIGNATION
1/4" = 1'-0"	1592568 & 1592576
SURVEY BOOK	SHEETS
-	4 of 10
CONTRACT	PROJECT
R-28940	0501212

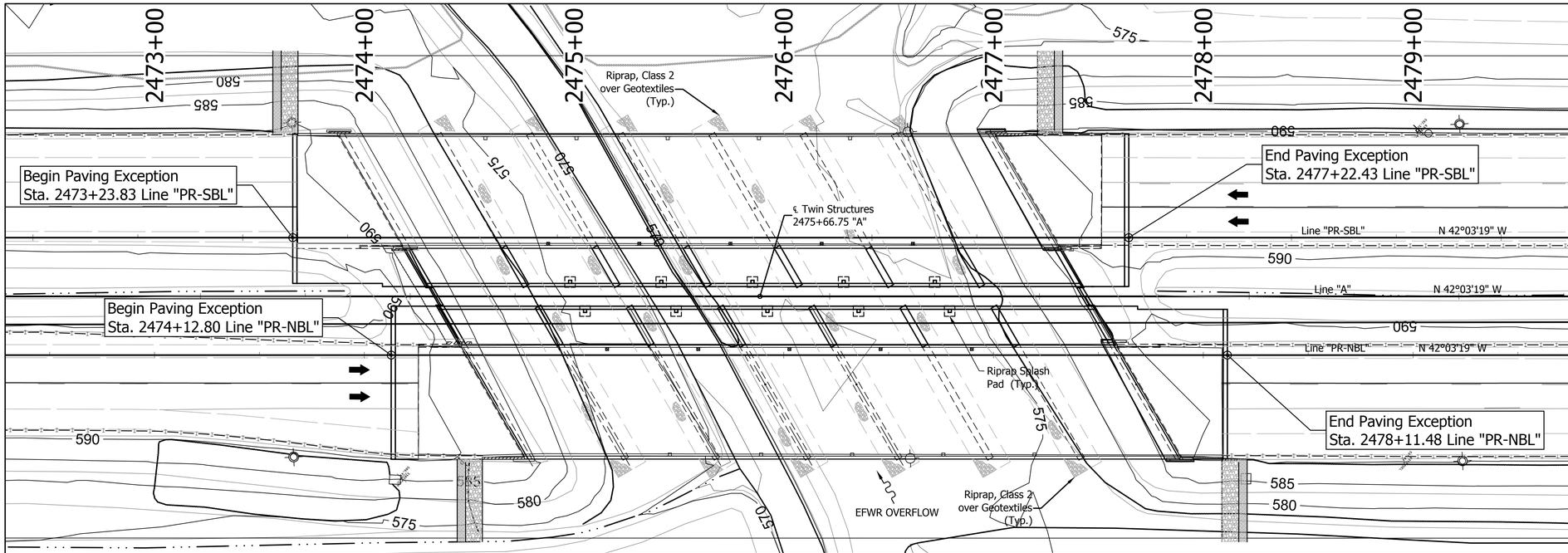

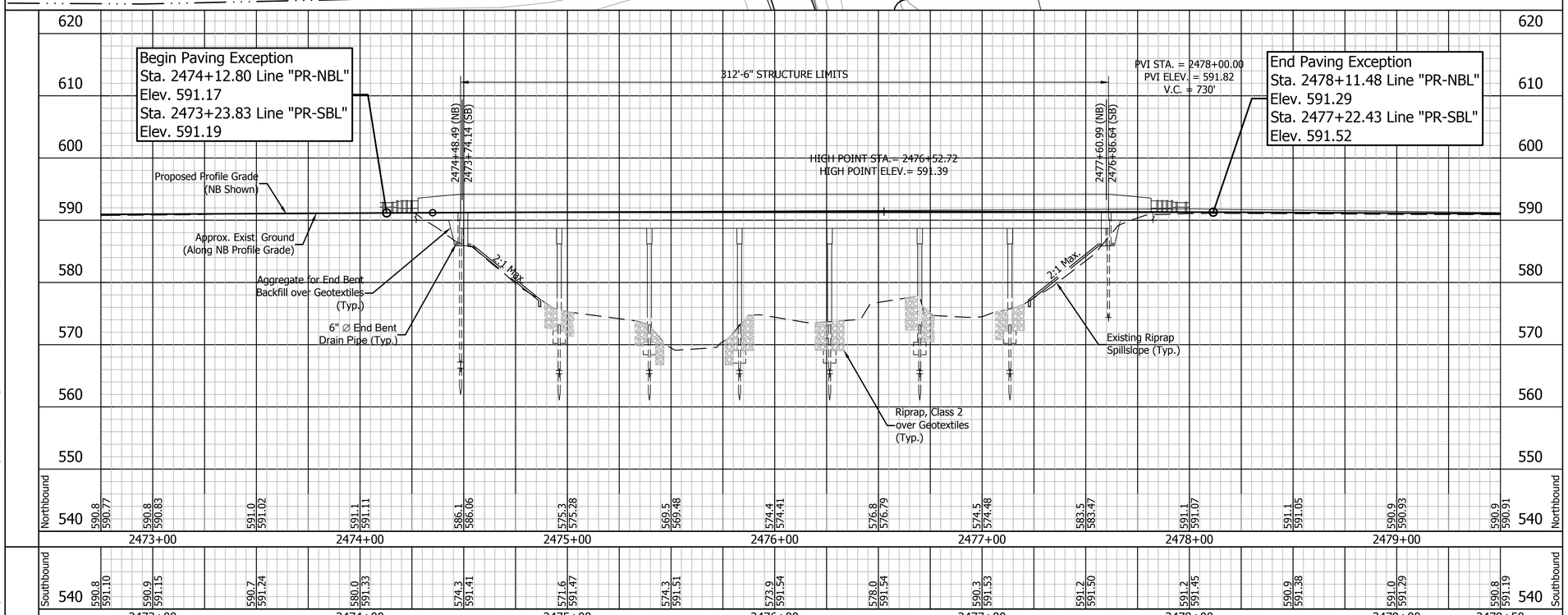

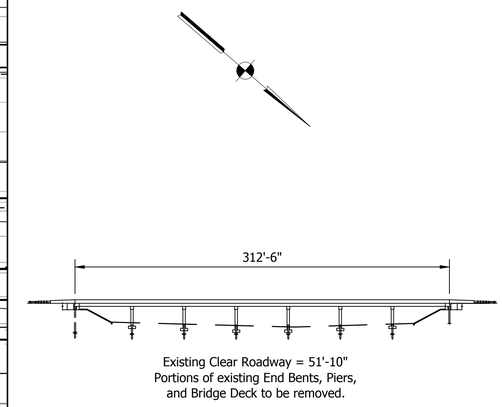

EXISTING STRUCTURE

No Scale

Notes: For R/W, Earthwork Summary, and Additional Information see Roadway Plans, Des. No. 0501212.

TWIN CONTINUOUS
PRESTRESSED CONCRETE
I-BEAM BRIDGES
7 SPANS: 46'-5 1/2", 5 @ 43'-5 5/8", 46'-5 1/2"
SKEW: 30°00'00" LEFT
70'-0" CLEAR ROADWAY
I-65 OVER EAST FORK WHITE RIVER, OVERFLOW 2

UNITED Consulting
1625 N. Post Road
Indianapolis, IN 46219
Phone 317-895-2585
Fax 317-895-2596
www.ucindy.com

RECOMMENDED FOR APPROVAL
DESIGN ENGINEER DATE

DESIGNED: MRL DRAWN: DJZ
CHECKED: BSF CHECKED: MRL

INDIANA
DEPARTMENT OF TRANSPORTATION

LAYOUT
I-65 OVER EFWR, OVERFLOW 2

HORIZONTAL SCALE	BRIDGE FILE
1" = 30'	I65-054-04653 CNBL & CSBL
VERTICAL SCALE	DESIGNATION
1" = 10'	1592568 & 1592576
SURVEY BOOK	SHEETS
-	5 of 10
CONTRACT	PROJECT
R-28940	0501212

File Name: P:\C3D\MK16-465\Bridge\Bridges 14 & 15 - I-65 over Overflow No 2\Dwg\Layout 14 & 15.dwg Plot Date: 4/25/2017 Plotted By: Zolp, David

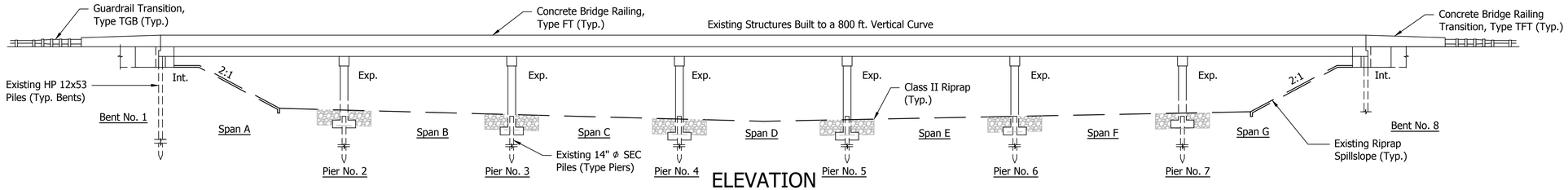

ELEVATION

SCALE: 1" = 30'

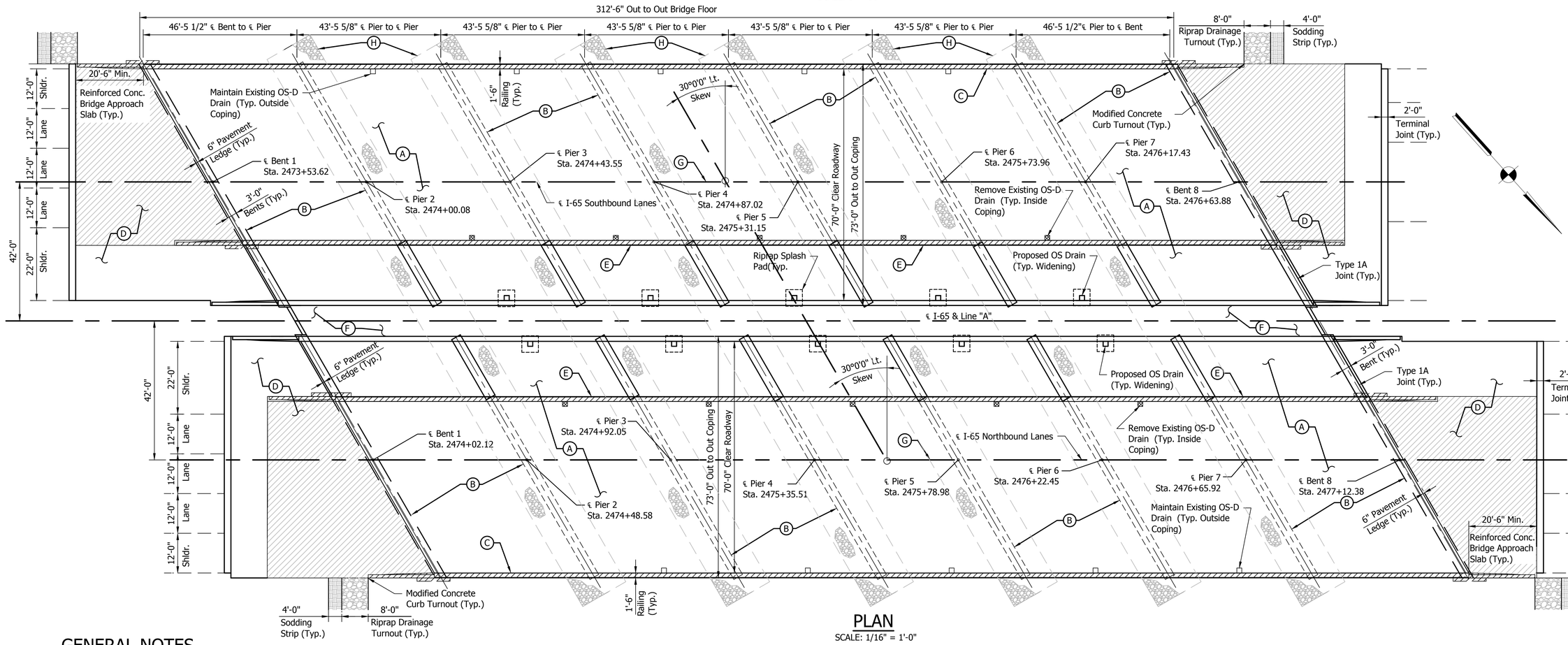

PLAN

SCALE: 1/16" = 1'-0"

GENERAL NOTES

1. Existing plans for this structure are on file in the records unit of the Indiana Department of Transportation as Bridge File I65-054-04653 BNBL & BSBL.
2. Where new work is to be fitted to old work, the Contractor shall check all dimensions and conditions in the field and report any discrepancies to the Engineer and assume responsibility for their correctness and fit of the new part to the old.
3. Reinforcing steel covering shall be 2 1/2" in top and 1" min. in bottom of floor slabs, and 2" in all other parts, unless noted.
4. Surface seal all exposed surfaces of approach slabs, face of deck coping and outer 6" of the underside of deck.
5. Stations shown are from the existing plans on file. The stations will be updated for the proposed alignment for Final Deign.

DESIGN DATA

Designed for HS-20-44 loading in accordance with 2002 AASHTO Standard Specifications for Highway Bridges 17th Edition and all Subsequent Interim Specifications.

ULTIMATE DESIGN STRESSES

Class "A" Concrete	f'c = 3,500 p.s.i.
Class "B" Concrete	f'c = 3,000 p.s.i.
Class "C" Concrete	f'c = 4,000 p.s.i.
Reinforcing Steel (Grade 60)	fy = 60,000 p.s.i.

LEGEND

- (A) Sandblast the existing bridge deck, widen the superstructure and substructure toward the median side, seal any cracks in the existing bridge deck, and install a polymeric bridge deck overlay over the entire bridge deck.
- (B) Patch spalled and delaminated areas on the existing substructure units.
- (C) Remove and replace the existing concrete bridge railing.
- (D) Remove and replace the existing reinforced concrete approach slabs.
- (E) Remove existing bridge railing and 1'-6" of coping.
- (F) Extend Riprap spillslope across median and widen 2' outside the bridge deck.
- (G) Place new Snowplowable Pavement Markings.
- (H) Excavate around Existing piers and place Class 2 Riprap to the depth of 4 ft. and a width of 6 ft. around all piers.
- Limits of Removal

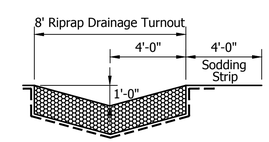

RIPRAP DRAINAGE TURNOUT

No Scale

TWIN CONTINUOUS PRESTRESSED CONCRETE I-BEAM BRIDGES
7 SPANS: 46'-5 1/2", 5 @ 43'-5 5/8", 46'-5 1/2"
SKEW: 30°00'00" LEFT
70'-0" CLEAR ROADWAY
I-65 OVER EAST FORK WHITE RIVER, OVERFLOW 2

UNITED Consulting
1625 N. Post Road
Indianapolis, IN 46219
Phone 317-895-2585
Fax 317-895-2596
www.ucindy.com

RECOMMENDED FOR APPROVAL
DESIGN ENGINEER DATE

DESIGNED: MRL DRAWN: DJZ
CHECKED: BSF CHECKED: MRL

INDIANA DEPARTMENT OF TRANSPORTATION

GENERAL PLAN
I-65 OVER EFWR, OVERFLOW 2

HORIZONTAL SCALE	BRIDGE FILE
AS SHOWN	I65-054-04653 CNBL & CSBL
VERTICAL SCALE	DESIGNATION
AS SHOWN	1592568 & 1592576
SURVEY BOOK	SHEETS
-	6 of 10
CONTRACT	PROJECT
R-28940	0501212

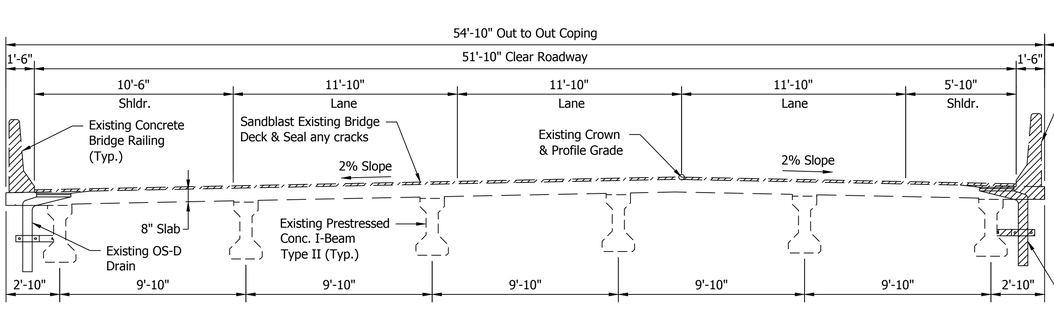

EXISTING TYPICAL SECTION SOUTHBOUND

SCALE: 1/4" = 1'-0"

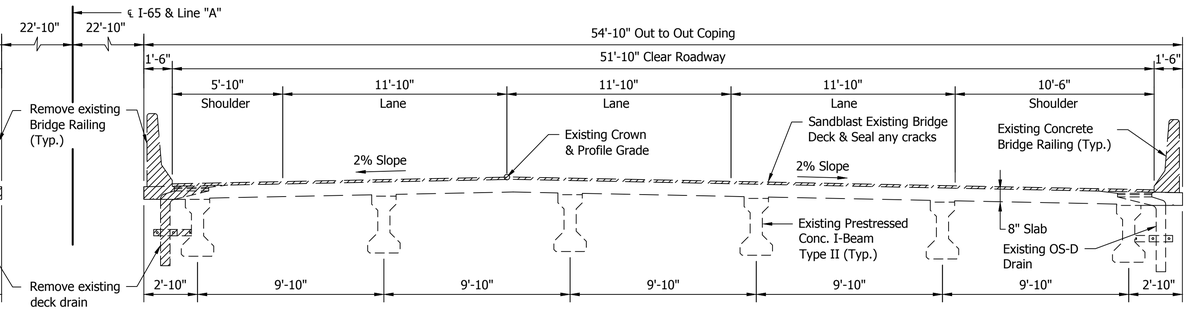

EXISTING TYPICAL SECTION NORTHBOUND

SCALE: 1/4" = 1'-0"

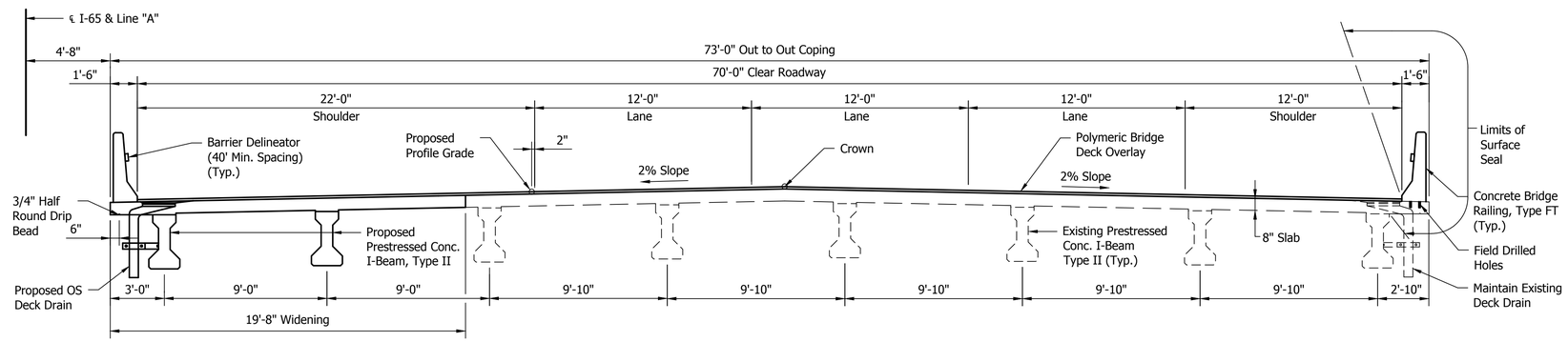

PROPOSED TYPICAL SECTION NORTHBOUND

SCALE: 1/4" = 1'-0"

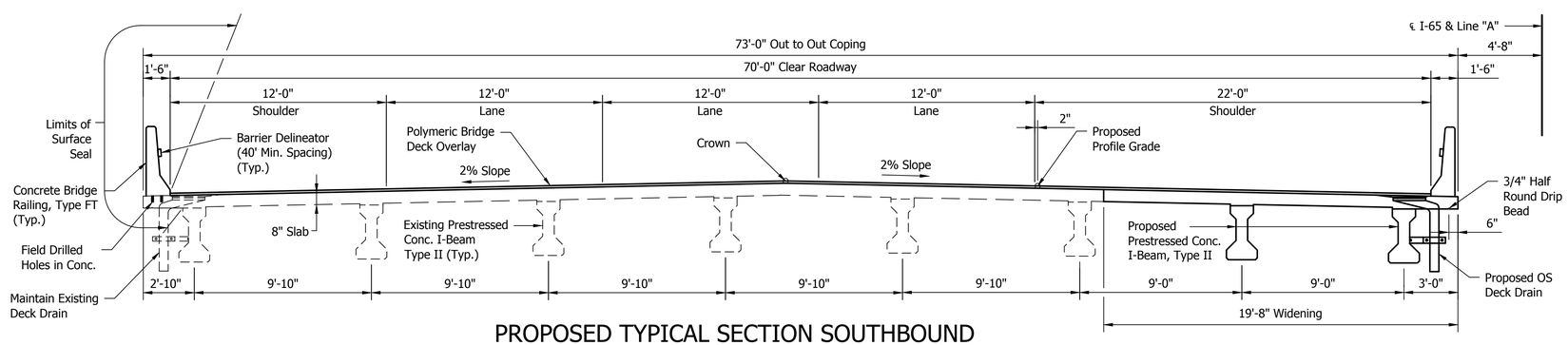

PROPOSED TYPICAL SECTION SOUTHBOUND

SCALE: 1/4" = 1'-0"

Limits of Removal

TWIN CONTINUOUS PRESTRESSED
CONCRETE I-BEAM BRIDGES
7 SPANS: 46'-5 1/2", 5 @ 43'-5 5/8",
46'-5 1/2"
SKEW: 30°00'00" LEFT
70'-0" CLEAR ROADWAY
I-65 OVER EAST FORK WHITE RIVER,
OVERFLOW 2

UNITED Consulting
1625 N. Post Road
Indianapolis, IN 46219
Phone 317-895-2585
Fax 317-895-2596
www.ucindy.com

RECOMMENDED FOR APPROVAL
DESIGN ENGINEER DATE

DESIGNED: MRL DRAWN: DJZ
CHECKED: BSF CHECKED: MRL

INDIANA
DEPARTMENT OF TRANSPORTATION

GENERAL PLAN
I-65 OVER EFWR, OVERFLOW 2

HORIZONTAL SCALE	BRIDGE FILE
AS SHOWN	I65-054-04653 CNBL & CSBL
VERTICAL SCALE	DESIGNATION
AS SHOWN	1592568 & 1592576
SURVEY BOOK	SHEETS
-	7 of 10
CONTRACT	PROJECT
R-28940	0501212

File Name: P:\C3D\MK16-465\Bridge\Bridges 14 & 15 - I-65 over Overflow No 2\Dwg\GP 4653.dwg Plot Date: 4/25/2017 Plotted By: Zola, David

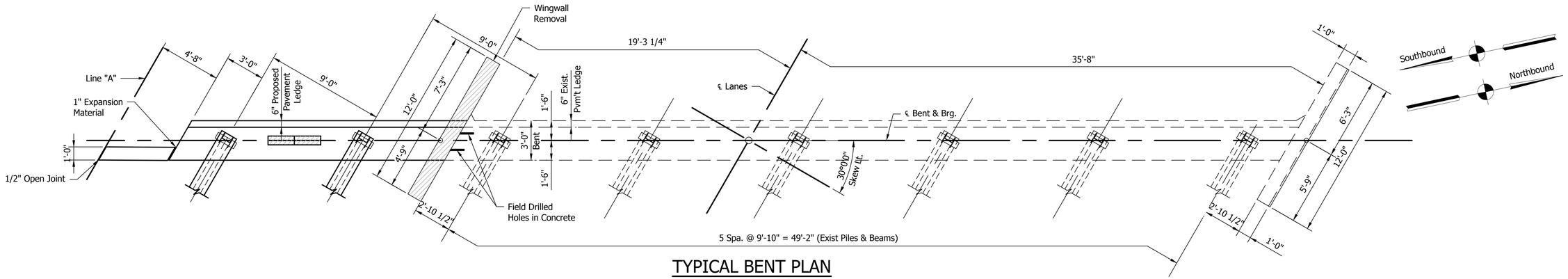

TYPICAL BENT PLAN

SCALE: 1/4" = 1'-0"
(NB Bent 4 & SB Bent 1 Shown,
NB Bent 1 & SB Bent 4 Same by opposite hand)

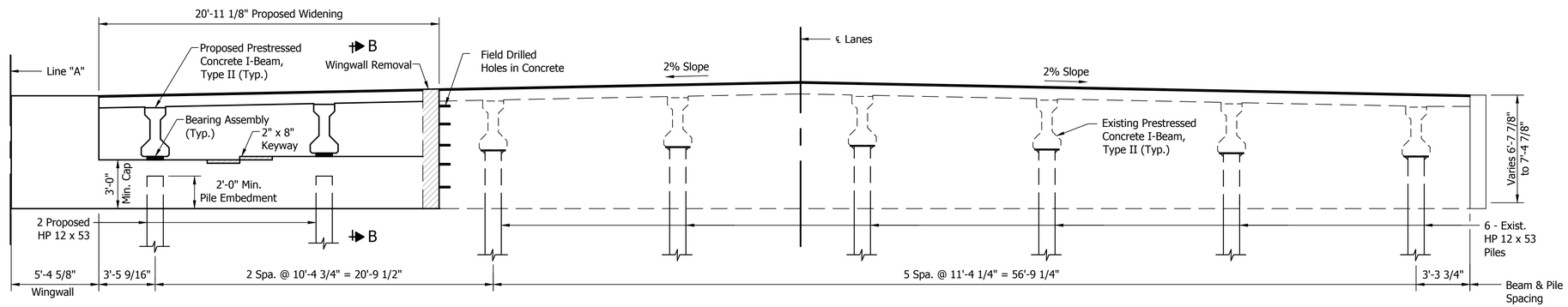

TYPICAL BENT ELEVATION

SCALE: 1/4" = 1'-0"
(NB Bent 4 & SB Bent 1 Shown,
NB Bent 1 & SB Bent 4 Same by opposite hand)

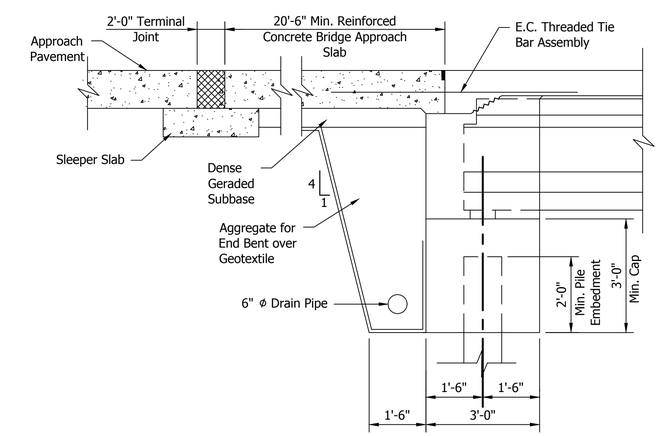

SECTION B-B

SCALE: 1/2" = 1'-0"

Limits of Removal

UNITED Consulting
1625 N. Post Road
Indianapolis, IN 46219
Phone 317-895-2585
Fax 317-895-2596
www.ucindy.com

RECOMMENDED FOR APPROVAL _____ DESIGN ENGINEER DATE

DESIGNED: MRL DRAWN: DJZ
CHECKED: BSF CHECKED: MRL

INDIANA
DEPARTMENT OF TRANSPORTATION

BENT DETAILS
I-65 OVER EFWR, OVERFLOW 2

HORIZONTAL SCALE	BRIDGE FILE
AS SHOWN	I65-054-04653 CNBL & CSBL
VERTICAL SCALE	DESIGNATION
AS SHOWN	1592568 & 1592576
SURVEY BOOK	SHEETS
-	8 of 10
CONTRACT	PROJECT
R-28940	0501212

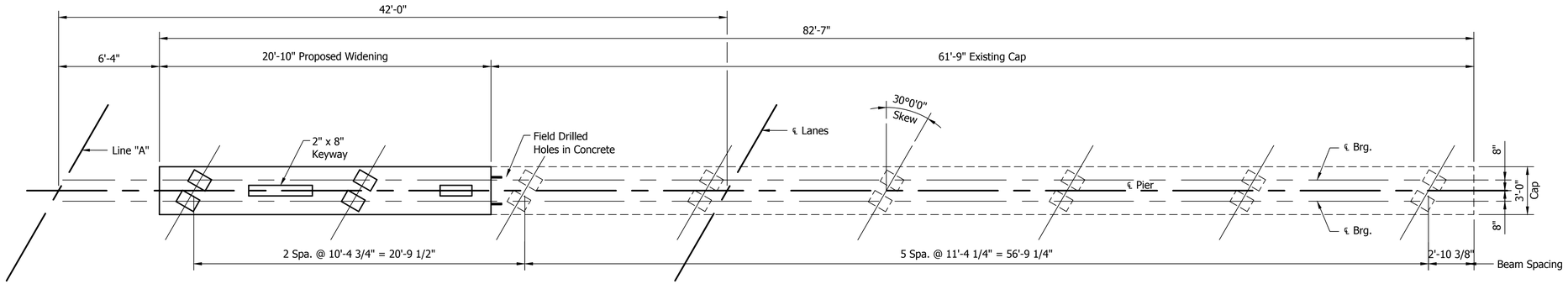

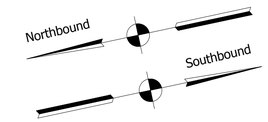

TYPICAL PIER PLAN

SCALE: 1/4" = 1'-0"

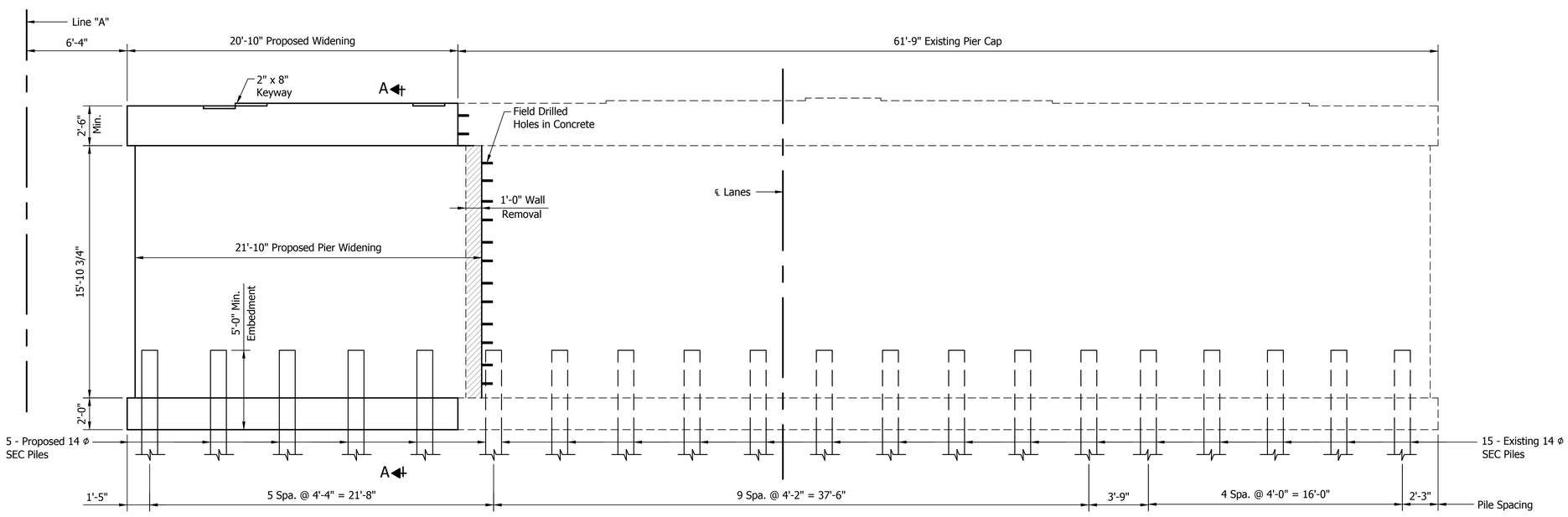

TYPICAL PIER ELEVATION

SCALE: 1/4" = 1'-0"

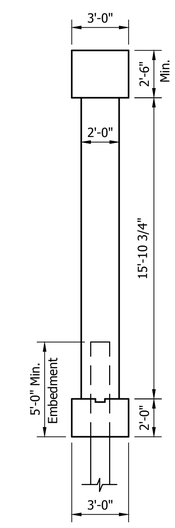

SECTION A-A

SCALE: 1/4" = 1'-0"

Limits of Removal

UNITED Consulting
1625 N. Post Road
Indianapolis, IN 46219
Phone 317-895-2585
Fax 317-895-2596
www.ucindy.com

RECOMMENDED FOR APPROVAL	DESIGN ENGINEER	DATE	
DESIGNED: MRL	DRAWN: DJZ		
CHECKED: BSF	CHECKED: MRL		

INDIANA
DEPARTMENT OF TRANSPORTATION

PIER DETAILS
I-65 OVER EFWR, OVERFLOW 2

HORIZONTAL SCALE	BRIDGE FILE
AS SHOWN	I65-054-04653 CNBL & CSBL
VERTICAL SCALE	DESIGNATION
AS SHOWN	1592568 & 1592576
SURVEY BOOK	SHEETS
-	9 of 10
CONTRACT	PROJECT
R-28940	0501212

SUMMARY OF BRIDGE QUANTITIES

ITEM	CONCRETE			CONCRETE RAILING CLASS C		REINF. BARS	EPOXY COATED REINF. BARS	STRUCT. STEEL	ANCHOR PLATES MK-AP	PILES												AGGREGATE FOR END BENT BACKFILL	CAST IRON GRATES, BASINS,& FITTINGS	EXP. JOINT TYPE "SS"	CONCRETE BARRIER RAIL TRANS. TYPE "WGB"	CONC.STR.MEMBERS		BARRIER DELINEATORS	SURFACE SEAL **	MASONRY COATING **	MODIFIED EPOXY COATED THREADED BAR ASSEMBLIES	R.C. PAVEMENT 14 Inch	DENSE GRADED SUBBASE 6 Inch
	CLASS C SUPERSTR	CLASS A SUBSTR	CLASS B IN FTG.							CONC. STEEL SHELL ENCASED		REINF. CONC. STEEL SHELL ENCASED EPOXY COAT.		HP12x74 STEEL "H"		STEEL H EPOXY COATED		STEEL H REINF. CONC. ENCASED		PILE TIP STEEL H	CORED HOLES IN ROCK						BOX BEAMS TYPE	I BEAM TYPE III						
	cys.	cys.	cys.	cys.	lft.	lbs.	lbs.	lbs.	each	no.	lft.	no.	lft.	no.	lft.	no.	lft.	no.	lft.	each	no.	lft.	cys.	lbs.	lft.	ea.	lft.	lft.	each	sys.	sys.	each	lft.	lbs.
Totals																																		

** ESTIMATED QUANTITY

UNITED Consulting
1625 N. Post Road
Indianapolis, IN 46219
Phone 317-895-2585
Fax 317-895-2596
www.ucindy.com

RECOMMENDED FOR APPROVAL
DESIGN ENGINEER DATE

DESIGNED: MRL DRAWN: DJZ
CHECKED: BSF CHECKED: MRL

INDIANA
DEPARTMENT OF TRANSPORTATION

BRIDGE SUMMARY TABLE
I-65 OVER EFWR, OVERFLOW 2

HORIZONTAL SCALE	BRIDGE FILE
N/A	I65-054-04653 CNBL & CSBL
VERTICAL SCALE	DESIGNATION
N/A	1592568 & 1592576
SURVEY BOOK	SHEETS
-	10 of 10
CONTRACT	PROJECT
R-28940	0501212