PROJECT	DESIGNATION
0501212	-
CONTRACT	BRIDGE FILE
R-28940	I-65-054-04651 DNBL & DSBL

INDIANA DEPARTMENT OF TRANSPORTATION

TRAFFIC DATA	I-65
A.D.T. (2019)	31,320 V.P.D.
A.D.T. (2039)	34,310 V.P.D.
D.H.V. (2039)	2,740 V.P.H.
DIRECTIONAL DISTRIBUTION	50%
TRUCKS	38% A.A.D.T.
	29% D.H.V.
DESIGN DATA	
DESIGN SPEED	70 M.P.H.
PROJECT DESIGN CRITERIA	PARTIAL RECONSTRUCTION 4R (FREEWAY)
FUNCTIONAL CLASSIFICATION	INTERSTATE
RURAL/URBAN	RURAL
TERRAIN	LEVEL
ACCESS CONTROL	FULL

INDEX

STRUCTURE	TYPE	SPAN AND SKEW	OVER	STATION
I65-054-04651 DNBL I65-054-04651 DSBL	BRIDGE REHABILITATION TWIN STEEL BEAM & PLATE GIRDER BRIDGES	20 SPANS: 50'-7 1/2", 63'-0", 2 @ 75'-0", 62'-0 1/2", 110'-0", 140'-0", 110'-0", 62'-6", 4 @ 75'-0", 2 @ 62'-6", 3 @ 75'-0", 63'-0", 50'-6" SKEW: 0	EAST FORK WHITE RIVER	STA. 2420+33.74 "A"

KIN DESIGNATION NUMBERS

PART	DESIGNATION	DESCRIPTION
1	0501212	I-65 ROAD PLANS
2	0501212	I-65 CROSS SECTIONS
3	0501212	I-65 TRAFFIC PLANS
4	1601732 & 1601733	I-65 OVER CSX RAILROAD
5	1592538 & 1592536	I-65 OVER MUTTON CREEK DITCH
6	1601840 & 1601970	I-65 OVER EAST FORK OF WHITE RIVER
7	1601841 & 1601920	I-65 OVER EAST FORK OF WHITE RIVER, OVERFLOW NO. 1
8	1592568 & 1592576	I-65 OVER EAST FORK OF WHITE RIVER, OVERFLOW NO. 2
9	1592575 & 1592589	I-65 OVER EAST FORK OF WHITE RIVER, OVERFLOW NO. 3
10	1592590 & 1592592	I-65 OVER L & I RAILROAD
11	1592595 & 1592594	I-65 OVER ABLE DITCH
12	1592600 & 1592599	I-65 OVER SMALLS CREEK
13	1700256	ENOS ROAD OVER I-65
13	1700257	CR 800 NORTH OVER I-65
13	1700258	REDDING ROAD OVER I-65
13	1700259	SR 11 OVER I-65
13	1700260	COUNTYLINE ROAD OVER I-65
13	1700261	CR 950 SOUTH OVER I-65
13	1700262	CR 625 SOUTH OVER I-65
14	1383528 & 1383529	I-65 OVER DENOIS CREEK

BRIDGE REHABILITATION PLANS

FOR SPANS OVER 20 FEET
INTERSTATE 65 OVER
EAST FORK OF WHITE RIVER

PROJECT NO. 0501212 P.E.

PROJECT NO. 0501212 CONST.

RP 53+0.912

This Bridge Rehabilitation is on Interstate 65 over East Fork White River
Located in Section 28, of Township 7 North, Range 6 East, Redding Township,
in Jackson County Indiana.

R-28940
Part 6 of 14

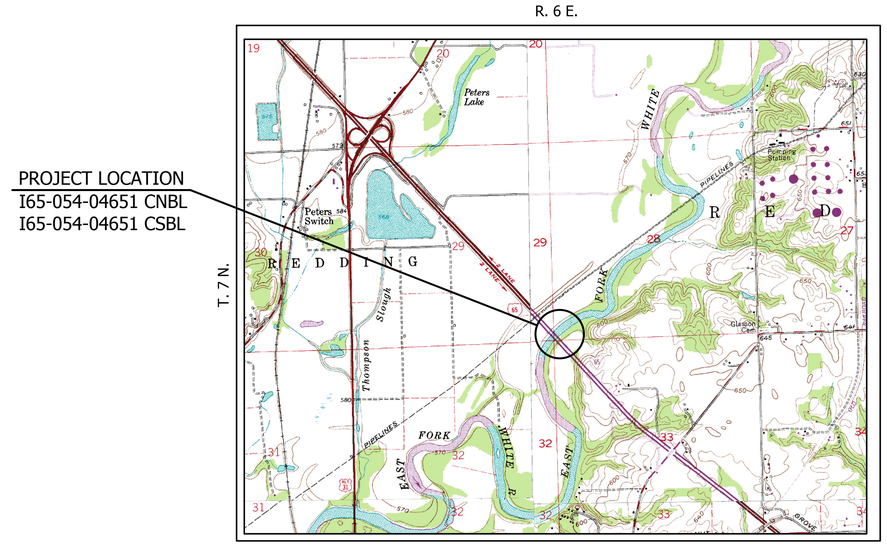

LOCATION MAP

Scale 1" = 2000'

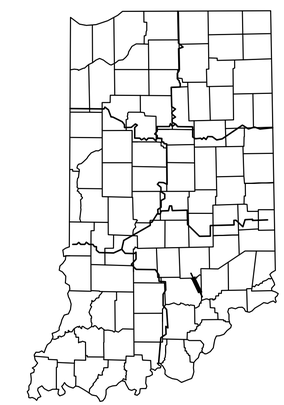

PROJECT LOCATION SHOWN BY
JACKSON COUNTY

LATITUDE: 39°00'45.25" N LONGITUDE: 85°52'22.48" W

BRIDGE LENGTH :	0.54 MI.
ROADWAY LENGTH :	13.71 MI.
TOTAL LENGTH :	14.25 MI.
MAX GRADE:	2.8%

[INDIANA DEPARTMENT OF TRANSPORTATION STANDARD SPECIFICATIONS DATED 2016 TO BE USED WITH THESE PLANS]

UNITED Consulting
1625 N. Post Road
Indianapolis, Indiana 46219
Phone: 317-895-2585
Fax: 317-895-2596 Web: www.ucindy.com

PLANS PREPARED BY: UNITED CONSULTING (317) 895-2585
PHONE NUMBER
CERTIFIED BY: DATE
APPROVED FOR LETTING: INDIANA DEPARTMENT OF TRANSPORTATION DATE

BRIDGE FILE
I-65-054-04651 DNBL & DSBL
DESIGNATION
-

SURVEY BOOK	SHEETS
-	1 of 11
CONTRACT	PROJECT
R-28940	0501212

File Name: P:\C3D\MK16-465\Bridge\Bridges 10 & 11 - I-65 over East Fork of White River\Dwg\Title 10 & 11.dwg Plot Date: 4/25/2017 Plotted By: Zola, David

UTILITIES

GENERAL NOTES

INDEX

SHEET NO.	DESCRIPTION
1	TITLE
2	INDEX
3	MOT DETAILS
4-6	LAYOUT
7-8	GENERAL PLAN
9	BENT DETAILS
10	PIER DETAILS
11	BRIDGE SUMMARY

REVISIONS

SHEET No.	DATE	REVISION

Indiana 811

Know what's below. Call before you dig.

CALL TWO WORKING DAYS BEFORE YOU DIG

Call 811 or 800-382-5544

UNITED Consulting

1625 N. Post Road
Indianapolis, IN 46219
Phone 317-895-2585
Fax 317-895-2596
www.ucindy.com

RECOMMENDED FOR APPROVAL

DESIGN ENGINEER DATE

DESIGNED: MRL DRAWN: DJZ

CHECKED: BSF CHECKED: MRL

INDIANA
DEPARTMENT OF TRANSPORTATION

GENERAL PLAN
I-65 OVER EAST FORK WHITE RIVER

HORIZONTAL SCALE	BRIDGE FILE
N/A	I-65-054-04651 DNBL & DSBL
VERTICAL SCALE	DESIGNATION
N/A	-
SURVEY BOOK	SHEETS
-	2 of 11
CONTRACT	PROJECT
R-28940	0501212

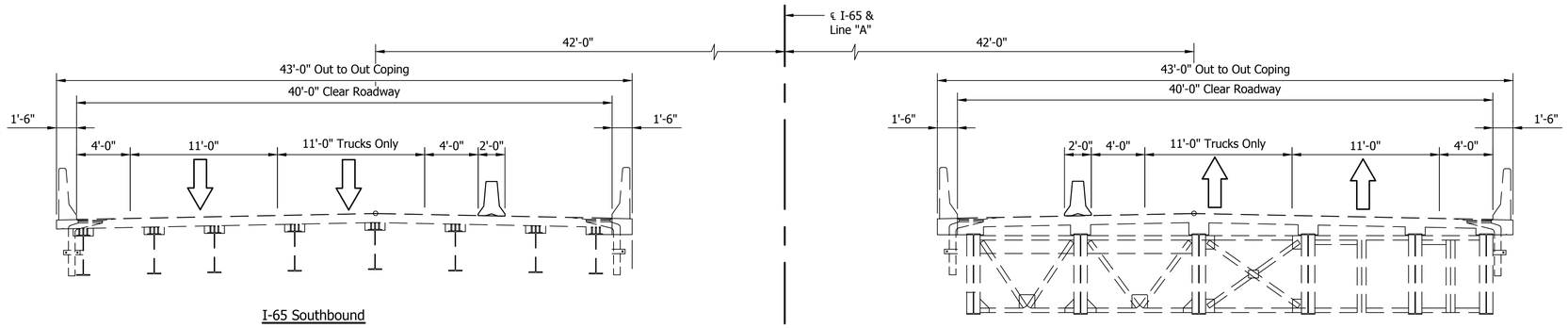

PHASE 2

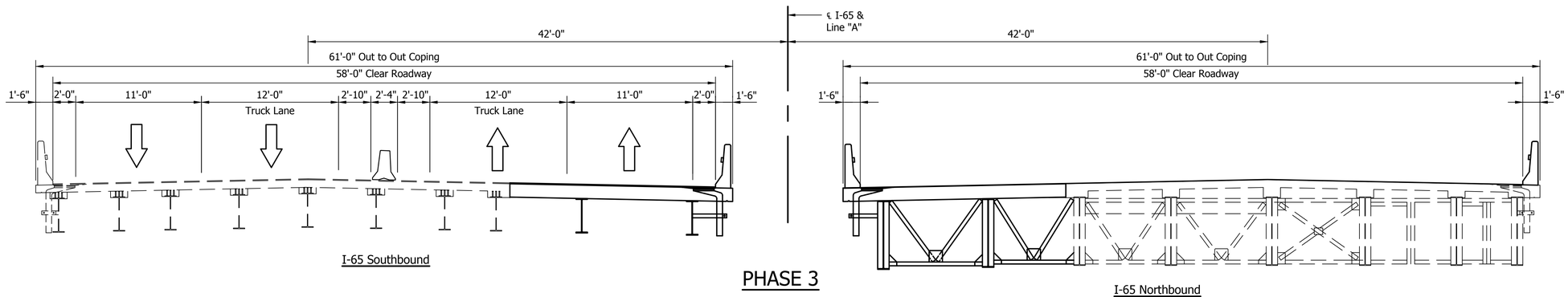

PHASE 3

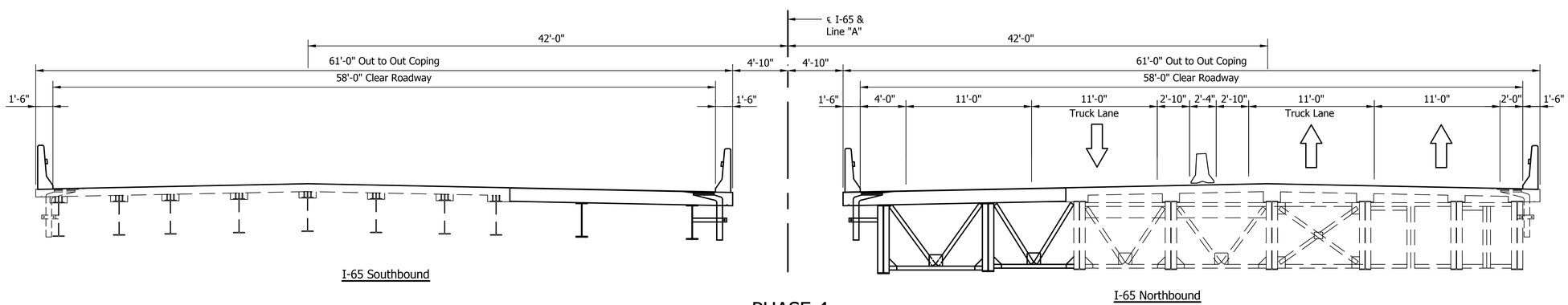

PHASE 4

Note: Plate Girder Section shown for NB.
W-Beam Section shown for SB.

UNITED Consulting
1625 N. Post Road
Indianapolis, IN 46219
Phone 317-895-2585
Fax 317-895-2596
www.ucindy.com

RECOMMENDED FOR APPROVAL _____ DESIGN ENGINEER DATE

DESIGNED: MRL DRAWN: DJZ
CHECKED: BSF CHECKED: MRL

INDIANA
DEPARTMENT OF TRANSPORTATION

MAINTENANCE OF TRAFFIC
I-65 OVER EAST FORK WHITE RIVER

HORIZONTAL SCALE	BRIDGE FILE
3/16" = 1'-0"	I-65-054-04651 DNBL & DSBL
VERTICAL SCALE	DESIGNATION
3/16" = 1'-0"	-
SURVEY BOOK	SHEETS
-	3 of 11
CONTRACT	PROJECT
R-28940	0501212

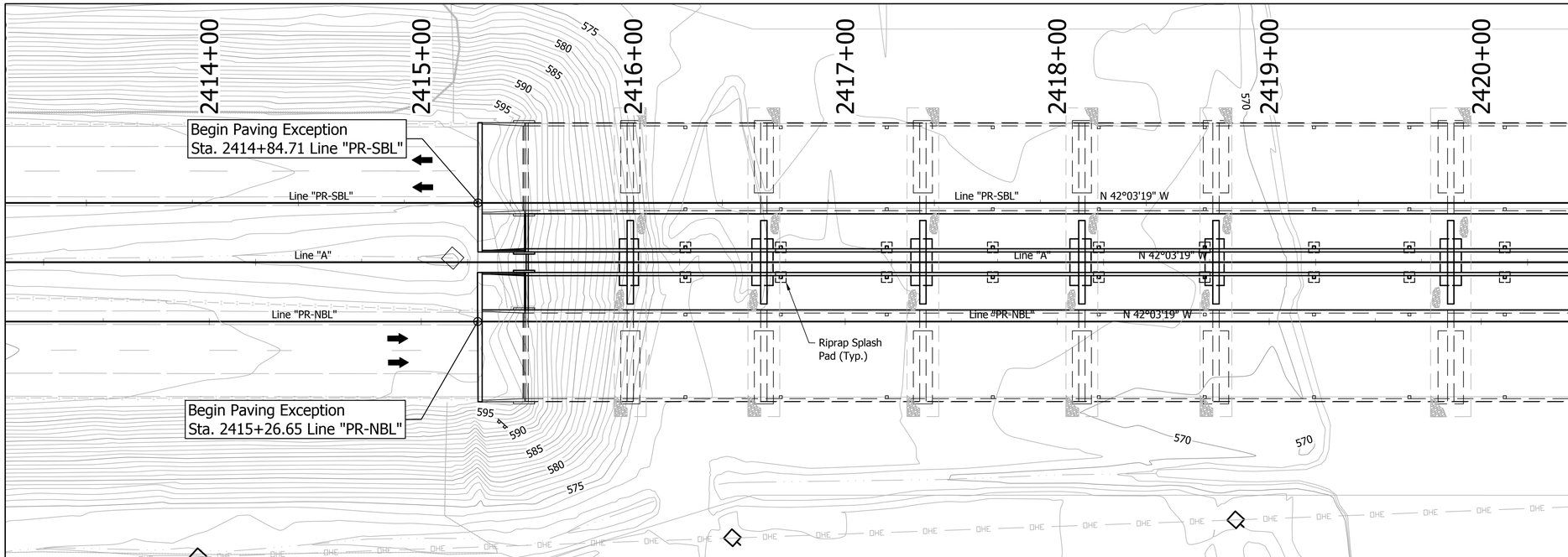

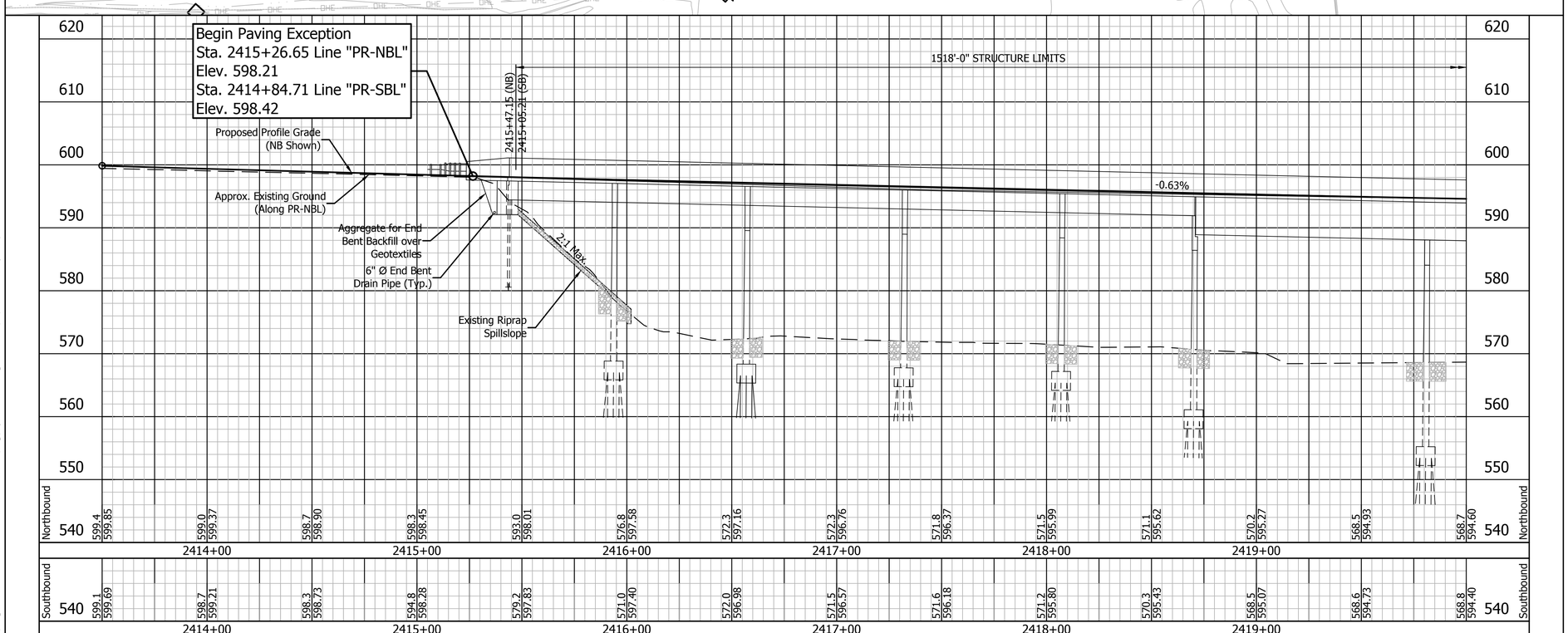

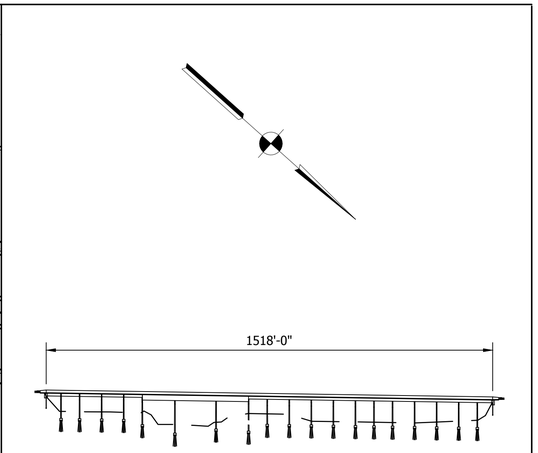

Existing Clear Roadway Width = 40'-0"
Portions of existing End Bents, Piers, and Bridge Deck to be removed.

EXISTING STRUCTURE

No Scale

Notes: For R/W, Earthwork Summary, and Additional Information see Roadway Plans, Des. No. 0501212.

TWIN CONTINUOUS STEEL BEAM & PLATE GIRDER BRIDGES
20 SPANS: 50'-7 1/2", 63'-0",
2 @ 75'-0", 62'-6", 110'-0", 140'-0",
110'-0", 62'-6", 4 @ 75'-0", 2 @ 62'-6",
3 @ 75'-0", 63'-0", 50'-7 1/2"
SKEW: 0°00'00"
CLEAR ROADWAY: 58'-0"
I-65 OVER EAST FORK WHITE RIVER

UNITED Consulting
1625 N. Post Road
Indianapolis, IN 46219
Phone 317-895-2585
Fax 317-895-2596
www.ucindy.com

RECOMMENDED FOR APPROVAL
DESIGN ENGINEER DATE

DESIGNED: MRL DRAWN: DJZ
CHECKED: BSF CHECKED: MRL

INDIANA
DEPARTMENT OF TRANSPORTATION

LAYOUT
I-65 OVER EAST FORK WHITE RIVER

HORIZONTAL SCALE	BRIDGE FILE
1" = 30'	I-65-054-04651 DNBL & DSBL
VERTICAL SCALE	DESIGNATION
1" = 10'	-
SURVEY BOOK	SHEETS
-	4 of 11
CONTRACT	PROJECT
R-28940	0501212

File Name: P:\CD\MK16-465\Bridge\Bridges 10 & 11 - I-65 over East Fork of White River\Dwg\Layout 10 & 11.dwg Plot Date: 4/25/2017 Plotted By: Zola, David

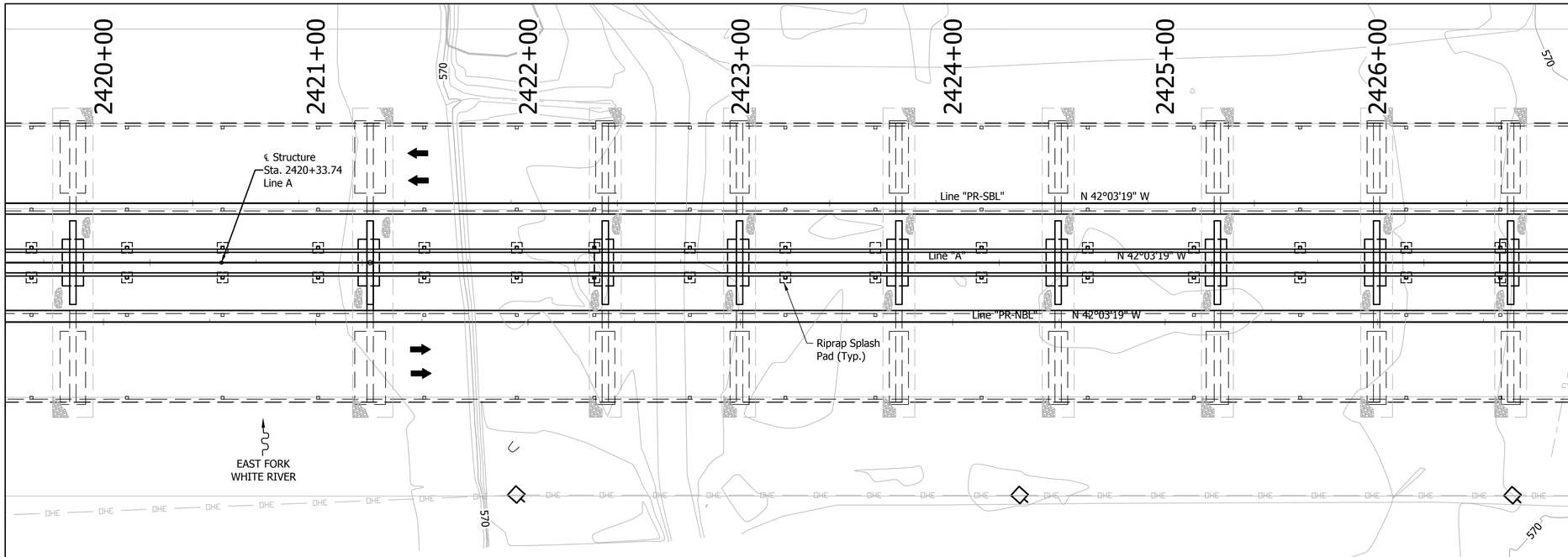

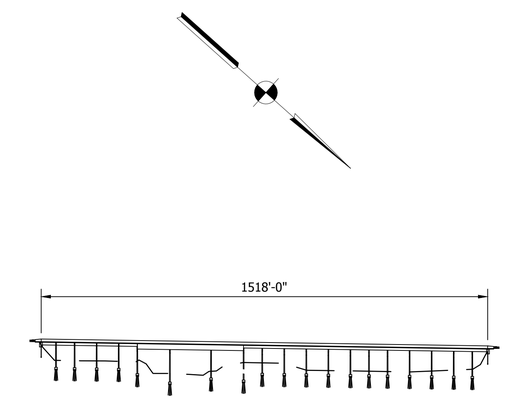

Existing Clear Roadway Width = 40'-0"
Portions of existing End Bents, Piers, and Bridge Deck to be removed.

EXISTING STRUCTURE

No Scale

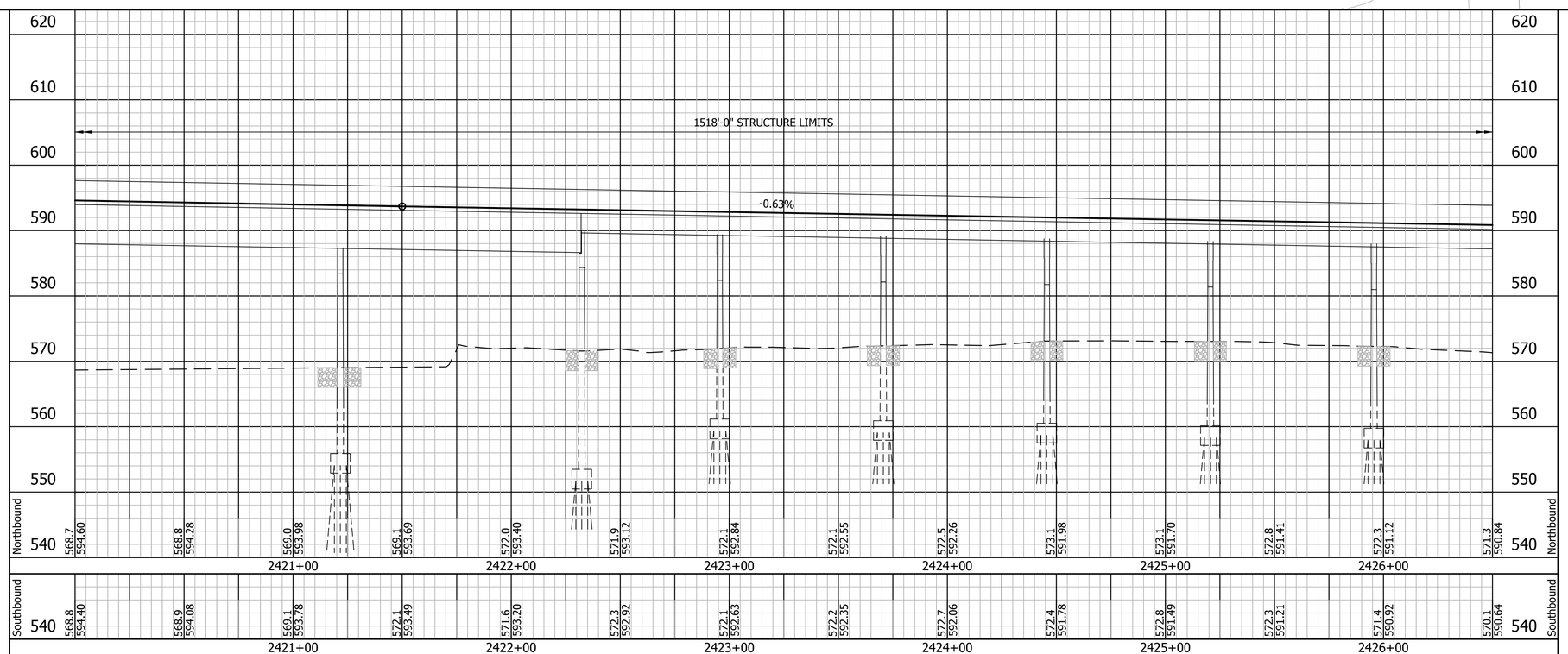

Notes: For R/W, Earthwork Summary, and Additional Information see Roadway Plans, Des. No. 0501212.

TWIN CONTINUOUS STEEL BEAM & PLATE
GIRDER BRIDGES
20 SPANS: 50'-7 1/2", 63'-0",
2 @ 75'-0", 62'-6", 110'-0", 140'-0",
110'-0", 62'-6", 4 @ 75'-0", 2 @ 62'-6",
3 @ 75'-0", 63'-0", 50'-7 1/2"
SKEW: 0°00'00"
CLEAR ROADWAY: 58'-0"
I-65 OVER EAST FORK WHITE RIVER

UNITED Consulting
1625 N. Post Road
Indianapolis, IN 46219
Phone 317-895-2585
Fax 317-895-2596
www.ucindy.com

RECOMMENDED FOR APPROVAL
DESIGN ENGINEER DATE

DESIGNED: MRL DRAWN: DJZ
CHECKED: BSF CHECKED: MRL

INDIANA
DEPARTMENT OF TRANSPORTATION

LAYOUT
I-65 OVER EAST FORK WHITE RIVER

HORIZONTAL SCALE	BRIDGE FILE
1" = 30'	I-65-054-04651 DNBL & DSBL
VERTICAL SCALE	DESIGNATION
1" = 10'	-
SURVEY BOOK	SHEETS
-	5 of 11
CONTRACT	PROJECT
R-28940	0501212

File Name: P:\CD\MK\I-65\Bridge\Bridges 10 & 11 - I-65 over East Fork of White River\Dwg\Layout 10 & 11.dwg Plot Date: 4/25/2017 Plotted By: Zola, David

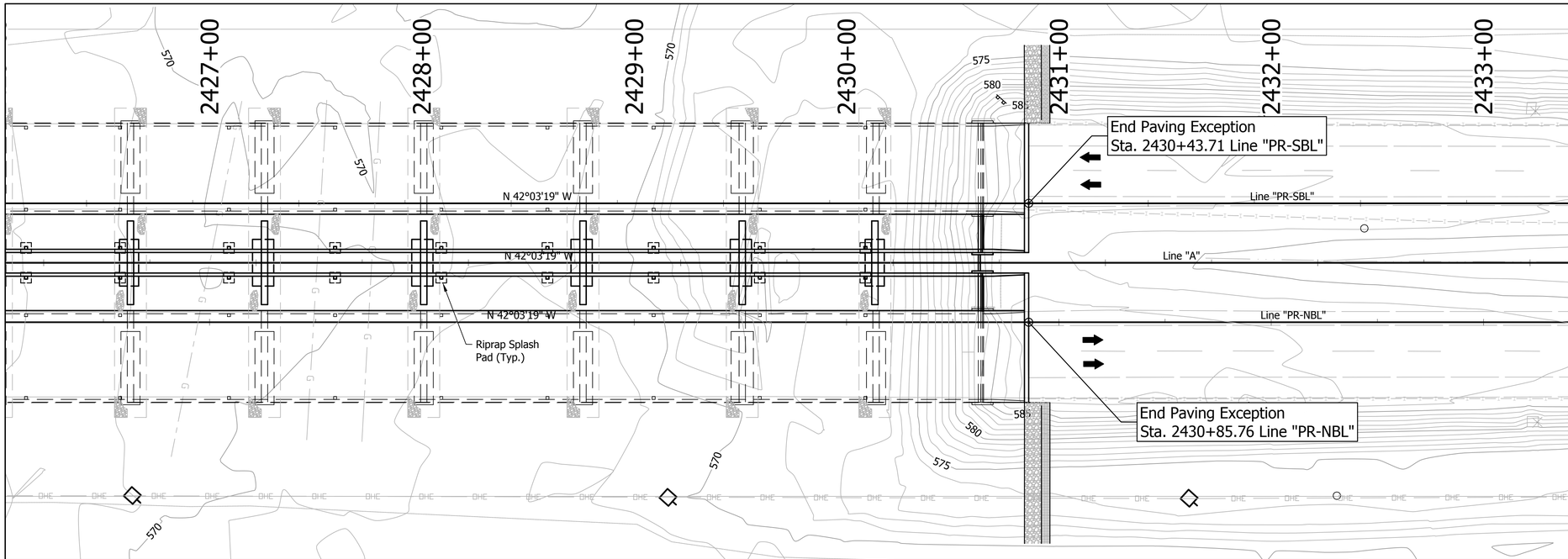

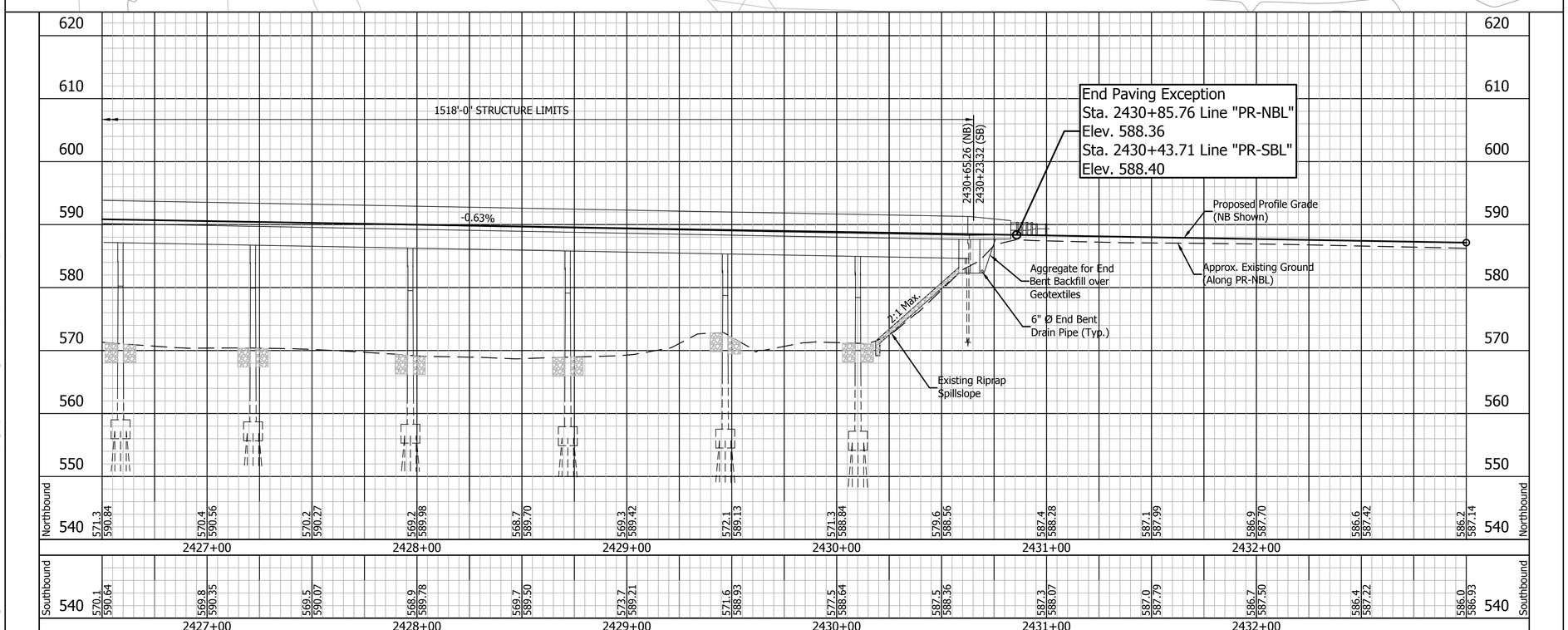

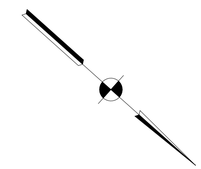

Existing Clear Roadway Width = 40'-0"
Portions of existing End Bents, Piers, and Bridge Deck to be removed.

EXISTING STRUCTURE

No Scale

Notes: For R/W, Earthwork Summary, and Additional Information see Roadway Plans, Des. No. 0501212.

TWIN CONTINUOUS STEEL BEAM & PLATE GIRDER BRIDGES
20 SPANS: 50'-7 1/2", 63'-0",
2 @ 75'-0", 62'-6", 110'-0", 140'-0",
110'-0", 62'-6", 4 @ 75'-0", 2 @ 62'-6",
3 @ 75'-0", 63'-0", 50'-7 1/2"
SKEW: 0°00'00"
CLEAR ROADWAY: 58'-0"
I-65 OVER EAST FORK WHITE RIVER

UNITED Consulting
1625 N. Post Road
Indianapolis, IN 46219
Phone 317-895-2585
Fax 317-895-2596
www.ucindy.com

RECOMMENDED FOR APPROVAL
DESIGN ENGINEER DATE

DESIGNED: MRL DRAWN: DJZ
CHECKED: BSF CHECKED: MRL

INDIANA
DEPARTMENT OF TRANSPORTATION

LAYOUT
I-65 OVER EAST FORK WHITE RIVER

HORIZONTAL SCALE	BRIDGE FILE
1" = 30'	I-65-054-04651 DNBL & DSBL
VERTICAL SCALE	DESIGNATION
1" = 10'	-
SURVEY BOOK	SHEETS
-	6 of 11
CONTRACT	PROJECT
R-28940	0501212

File Name: P:\CD\MK\I-65\Bridge\Bridges 10 & 11 - I-65 over East Fork of White River\Dwg\Layout 10 & 11.dwg Plot Date: 4/25/2017 Plotted By: Zola, David

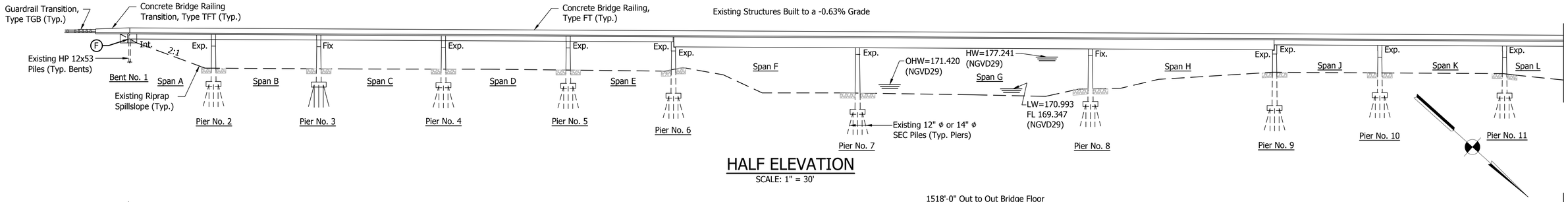

HALF ELEVATION

SCALE: 1" = 30'

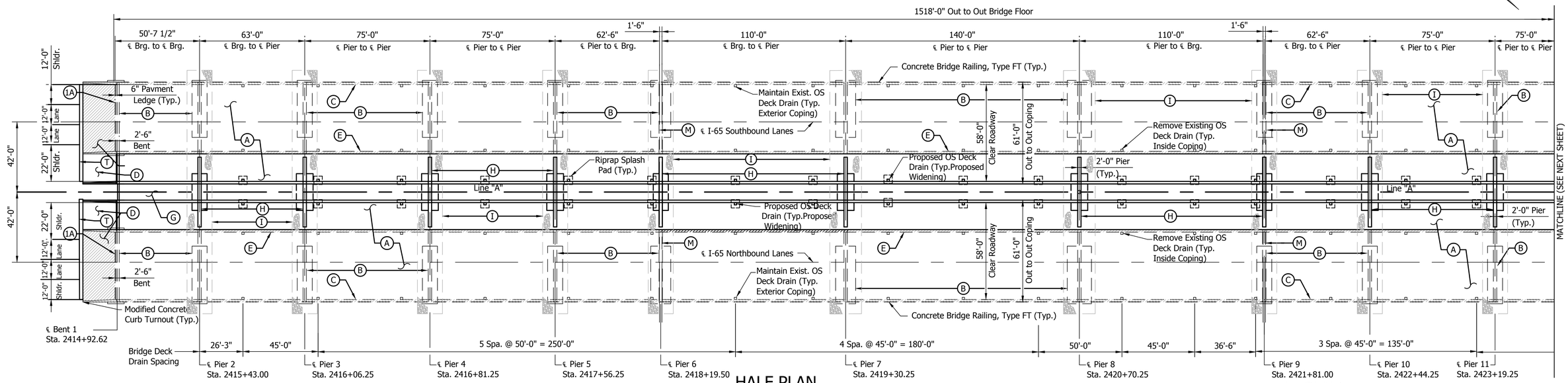

HALF PLAN

SCALE: 1" = 30'

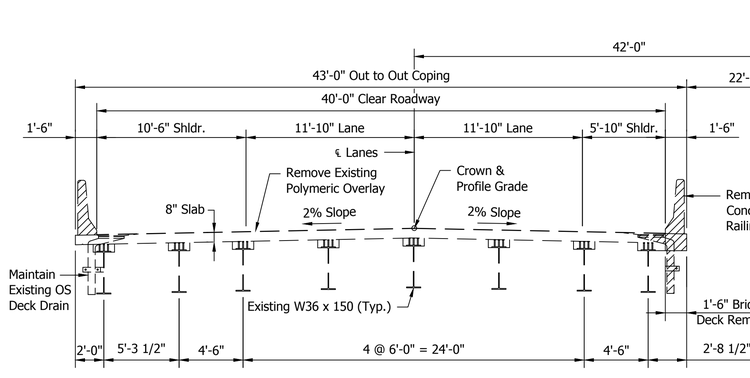

SPANS A THRU E & J THRU W

EXISTING SECTION

SCALE: 3/16" = 1'-0"

(Southbound Shown, Northbound same by Opposite Hand)

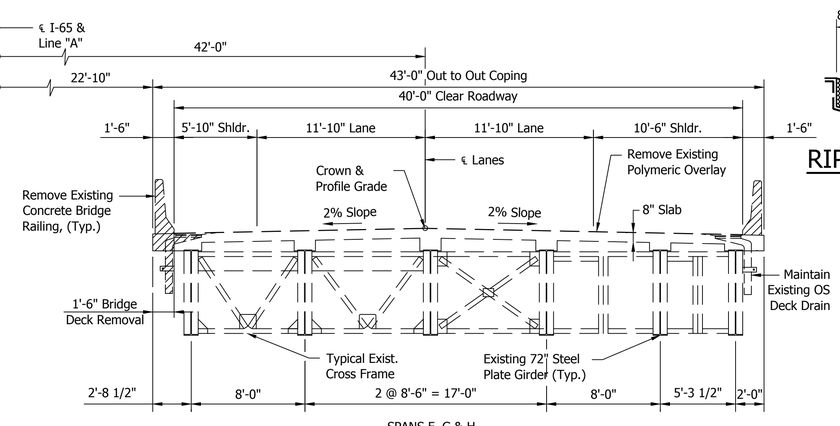

SPANS F, G & H

EXISTING SECTION

SCALE: 3/16" = 1'-0"

(Northbound Shown, Southbound same by Opposite Hand)

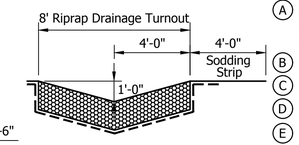

RIPRAP DRAINAGE TURNOUT

NO SCALE

LEGEND

- (A) Remove the existing polymeric bridge deck overlay, widen the superstructure and end bents toward the median side, widen all joints in-kind and install a new polymeric bridge deck overlay over the entire bridge deck.
- (B) Patch spalled and delaminated areas on the existing substructure units.
- (C) Remove and replace the existing concrete bridge railing.
- (D) Remove and replace the existing reinforced concrete approach slabs.
- (E) Remove the existing bridge railing and 1'-6" of the bridge coping.
- (F) Blast, clean and prime ends of Steel Beams a minimum of 5'-0" beyond the face of the bent.
- (G) Extend riprap across median and widen 2' outside the bridge deck.
- (H) Construct Piers in median.
- (I) Excavate around existing piers and place Class 1 riprap around all piers to the depth of 3ft. and a width of 6ft., except at piers 7 and 8, the width shall be 8 ft.
- (M) Expansion Joint, Type M. Remove the existing rubber membrane from the existing joints and install a continuous rubber membrane through the entire joint.
- (1A) Type 1A construction Joint
- (T) 2'-0" Terminal Joint.
- Limits of Removal

TWIN CONTINUOUS STEEL BEAM & PLATE GIRDER BRIDGES
20 SPANS: 50'-7 1/2", 63'-0", 2 @ 75'-0", 62'-6", 110'-0", 140'-0", 110'-0", 62'-6", 4 @ 75'-0", 2 @ 62'-6", 3 @ 75'-0", 63'-0", 50'-7 1/2"
SKEW: 0°00'00" CLEAR ROADWAY: 58'-0" I-65 OVER EAST FORK WHITE RIVER

UNITED Consulting
1625 N. Post Road
Indianapolis, IN 46219
Phone 317-895-2585
Fax 317-895-2596
www.ucindy.com

RECOMMENDED FOR APPROVAL _____ DESIGN ENGINEER DATE

DESIGNED: MRL | DRAWN: DJZ
CHECKED: BSF | CHECKED: MRL

INDIANA
DEPARTMENT OF TRANSPORTATION

GENERAL PLAN
I-65 OVER EAST FORK WHITE RIVER

HORIZONTAL SCALE	BRIDGE FILE
AS SHOWN	I-65-054-04651 DNBL & DSBL
VERTICAL SCALE	DESIGNATION
AS SHOWN	-
SURVEY BOOK	SHEETS
-	7 of 11
CONTRACT	PROJECT
R-28940	0501212

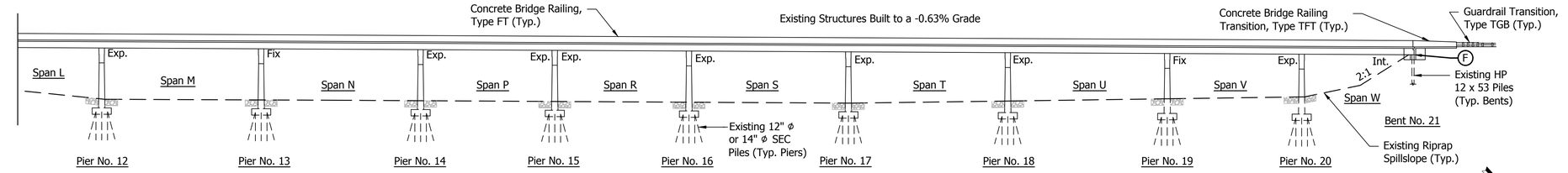

HALF ELEVATION

SCALE: 1" = 30'

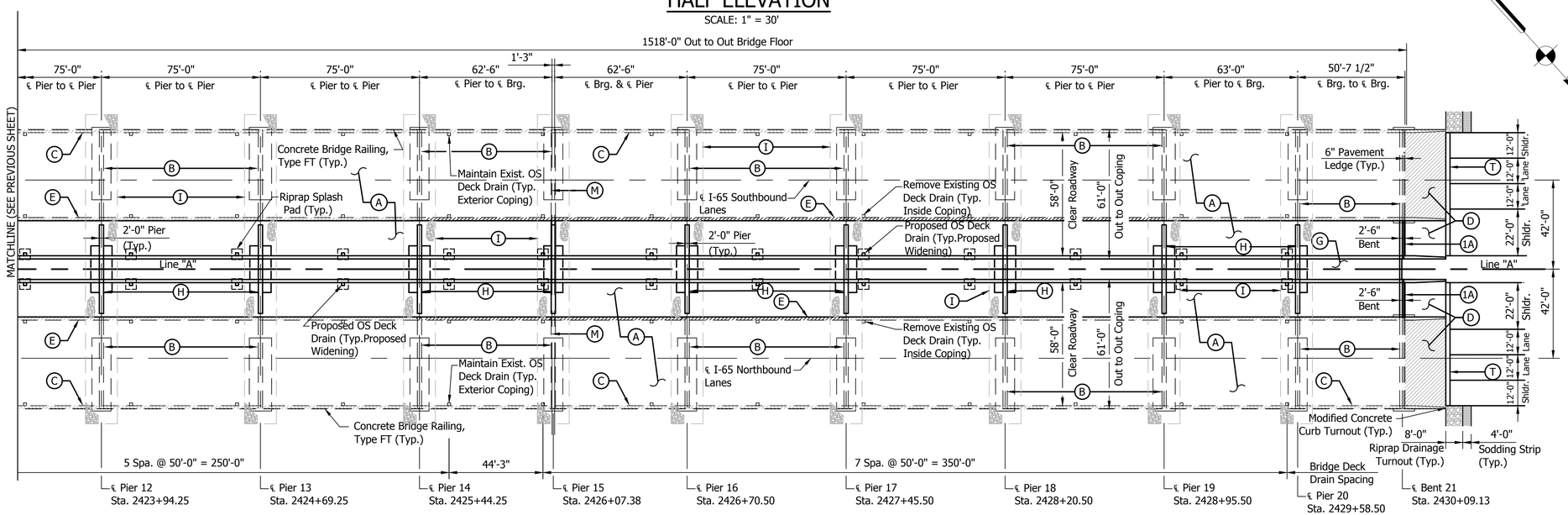

HALF PLAN

SCALE: 1" = 30'

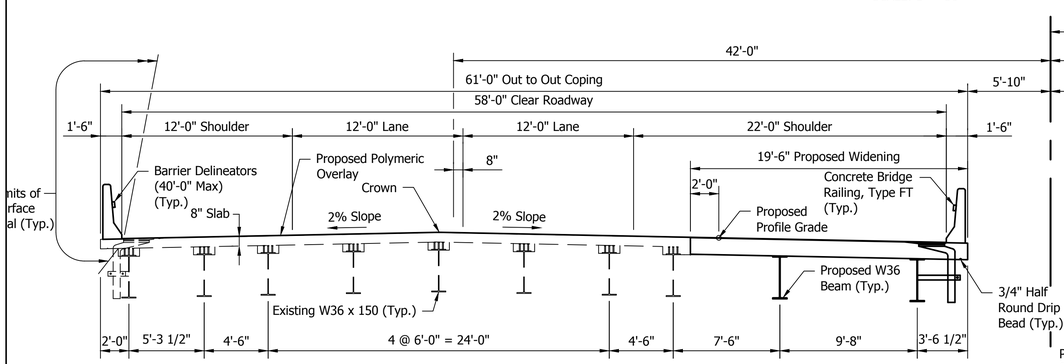

SPANS A THRU E & J THRU W

PROPOSED SECTION

SCALE: 3/16" = 1'-0"

(Southbound Shown, Northbound same by Opposite Hand)

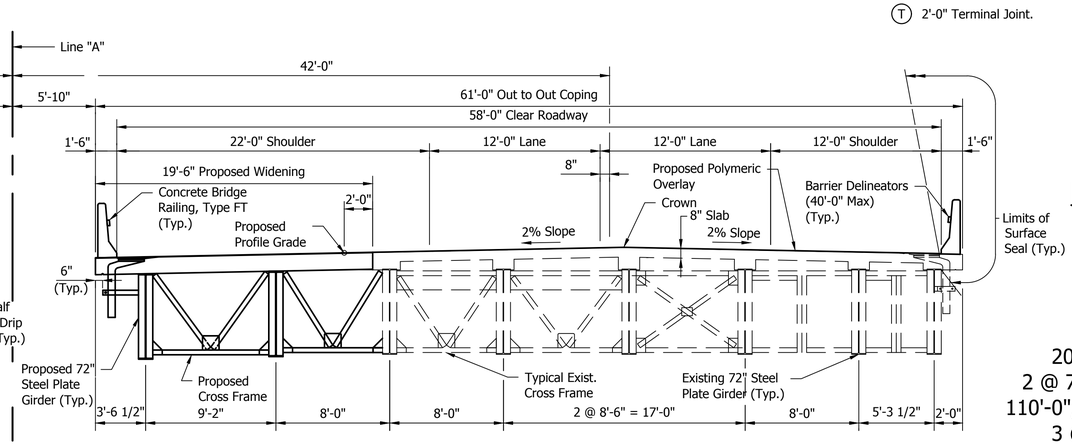

SPANS F, G & H

PROPOSED SECTION

SCALE: 3/16" = 1'-0"

(Northbound Shown, Southbound same by Opposite Hand)

GENERAL NOTES

1. Existing plans for this structure are on file in the records unit of the Indiana Department of Transportation as Bridge File I65-054-04651 CNBL & CSBL.
2. Where new work is to be fitted to old work, the Contractor shall check all dimensions and conditions in the field and report any discrepancies to the Engineer and assume responsibility for their correctness and fit of the new part to the old.
3. Reinforcing steel covering shall be 2 1/2" in top and 1" min. in bottom of floor slabs, and 2" in all other parts, unless noted.
4. Surface seal all exposed surfaces of approach slabs, face of deck coping and outer 6" of the underside of deck.
5. Stations shown are from the existing plans on file. The stations will be updated for the proposed alignment for Final Deign.

DESIGN DATA

Designed for HS-20-44 loading in accordance with 2002 AASHTO Standard Specifications for Highway Bridges 17th Edition and all Subsequent Interim Specifications.

ULTIMATE DESIGN STRESSES

Class "A" Concrete	f'c = 3,500 p.s.i.
Class "B" Concrete	f'c = 3,000 p.s.i.
Class "C" Concrete	f'c = 4,000 p.s.i.
Reinforcing Steel (Grade 60)	fy = 60,000 p.s.i.
Structural Steel ASTM A709 (Grade 50)	fy = 50,000 p.s.i.

LEGEND

- (A) Remove the existing polymeric bridge deck overlay, widen the superstructure and end bents toward the median side, widen all joints in-kind and install a new polymeric bridge deck overlay over the entire bridge deck.
- (B) Patch spalled and delaminated areas on the existing substructure units.
- (C) Remove and replace the existing concrete bridge railing.
- (D) Remove and replace the existing reinforced concrete approach slabs.
- (E) Remove the existing bridge railing and 1'-6" of the bridge coping.
- (F) Blast, clean and prime ends of Steel Beams a minimum of 5'-0" beyond the face of the bent.
- (G) Extend riprap across median and widen 2' outside the bridge deck.
- (H) Construct Piers in median.
- (I) Excavate around existing piers and place Class 1 riprap around all piers to the depth of 3ft. and a width of 6ft., except at piers 7 and 8, the width shall be 8 ft.
- (M) Expansion Joint, Type M. Remove the existing rubber membrane from the existing joints and install a continuous rubber membrane through the entire joint.
- (1A) Type 1A construction Joint
- (T) 2'-0" Terminal Joint.

Limits of Removal

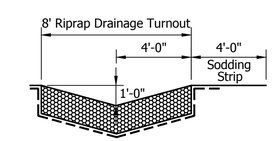

RIPRAP DRAINAGE TURNOUT

NO SCALE

TWIN CONTINUOUS
STEEL BEAM & PLATE
GIRDER BRIDGES
20 SPANS: 50'-7 1/2", 63'-0",
2 @ 75'-0", 62'-6", 110'-0", 140'-0",
110'-0", 62'-6", 4 @ 75'-0", 2 @ 62'-6",
3 @ 75'-0", 63'-0", 50'-7 1/2"
SKEW: 0°00'00"
CLEAR ROADWAY: 58'-0"
I-65 OVER EAST FORK WHITE RIVER

UNITED Consulting
1625 N. Post Road
Indianapolis, IN 46219
Phone 317-895-2585
Fax 317-895-2596
www.ucindy.com

RECOMMENDED FOR APPROVAL _____ DESIGN ENGINEER DATE

DESIGNED: MRL DRAWN: DJZ
CHECKED: BSF CHECKED: MRL

INDIANA
DEPARTMENT OF TRANSPORTATION

GENERAL PLAN
I-65 OVER EAST FORK WHITE RIVER

HORIZONTAL SCALE	BRIDGE FILE
AS SHOWN	I-65-054-04651 DNBL & DSBL
VERTICAL SCALE	DESIGNATION
AS SHOWN	-
SURVEY BOOK	SHEETS
-	8 of 11
CONTRACT	PROJECT
R-28940	0501212

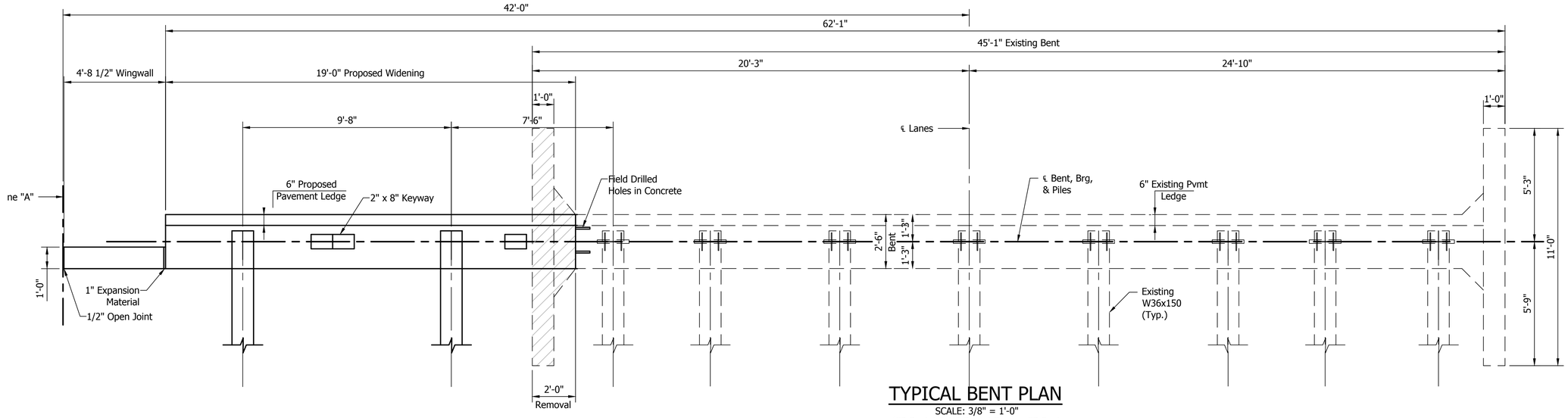

TYPICAL BENT PLAN

SCALE: 3/8" = 1'-0"
(SB Bent 1 & NB Bent 4 Shown, SB Bent 4 & NB Bent 1 Same by Opposite Hand)

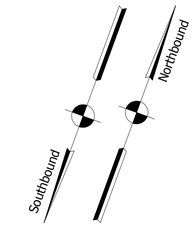

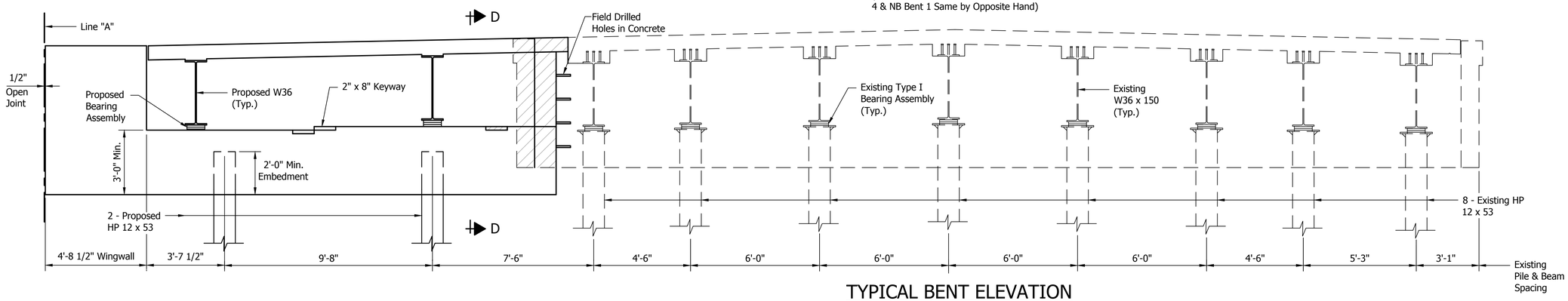

TYPICAL BENT ELEVATION

SCALE: 3/8" = 1'-0"
(SB Bent 1 & NB Bent 4 Shown, SB Bent 4 & NB Bent 1 Same by Opposite Hand)

LEGEND

Limits of Removal

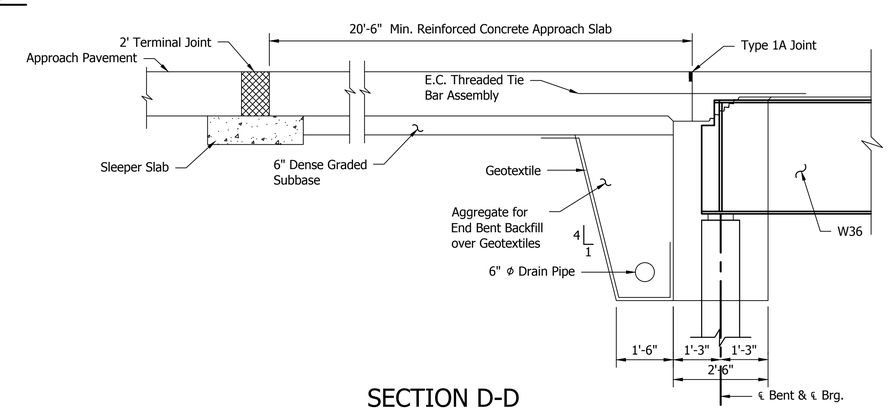

SECTION D-D

SCALE: 1/2" = 1'-0"

UNITED Consulting
1625 N. Post Road
Indianapolis, IN 46219
Phone 317-895-2585
Fax 317-895-2596
www.ucindy.com

RECOMMENDED FOR APPROVAL	DESIGN ENGINEER	DATE
DESIGNED: MRL	DRAWN: DJZ	
CHECKED: BSF	CHECKED: MRL	

INDIANA
DEPARTMENT OF TRANSPORTATION

BENT DETAILS
I-65 OVER EAST FORK WHITE RIVER

HORIZONTAL SCALE	BRIDGE FILE
AS SHOWN	I-65-054-04651 DNBL & DSBL
VERTICAL SCALE	DESIGNATION
AS SHOWN	-
SURVEY BOOK	SHEETS
-	9 of 11
CONTRACT	PROJECT
R-28940	0501212

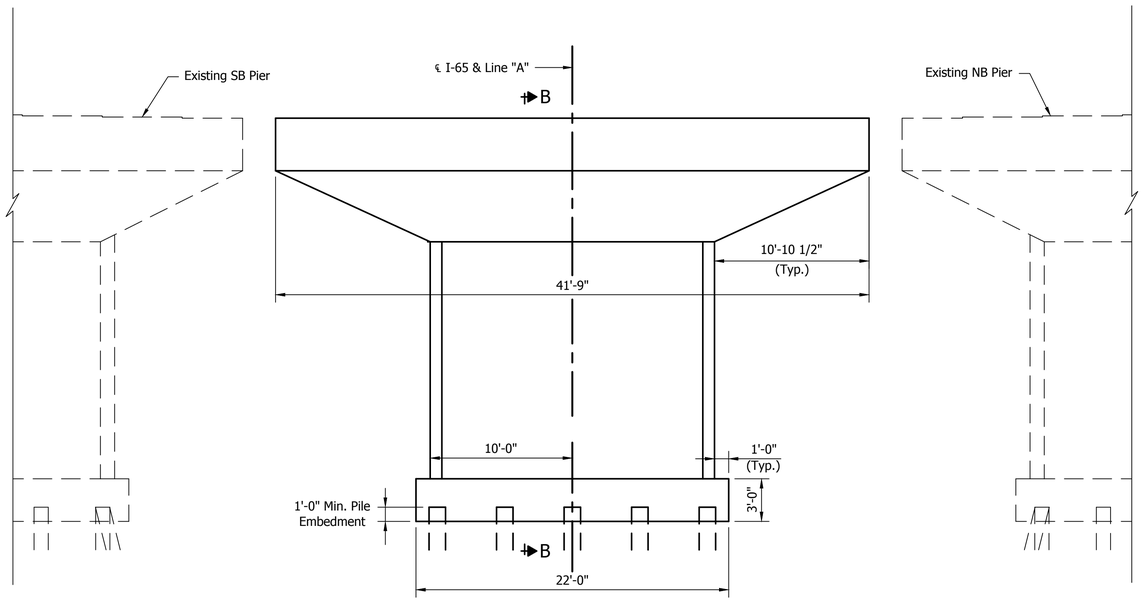

ELEVATION

SCALE: 3/16" = 1'-0"

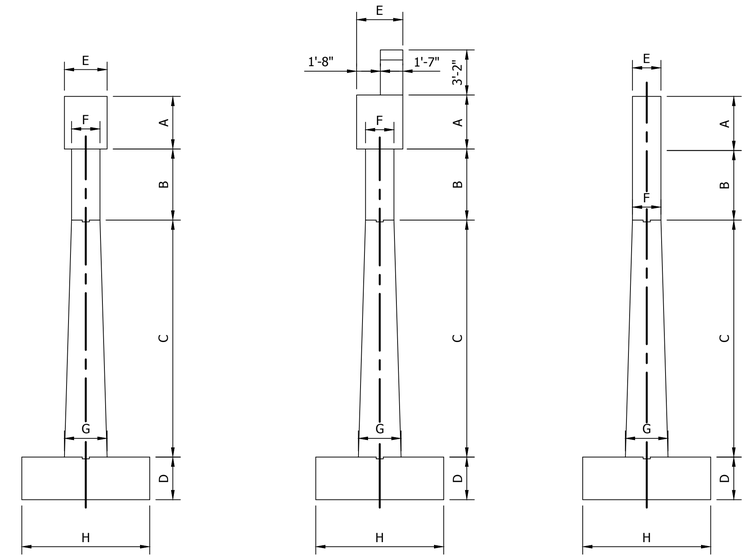

Piers: 2, 15, 20

Piers: 6, 9

Piers: 3-5, 7-8, 10-14, 16-19

SECTIONS B-B

SCALE: 3/16" = 1'-0"

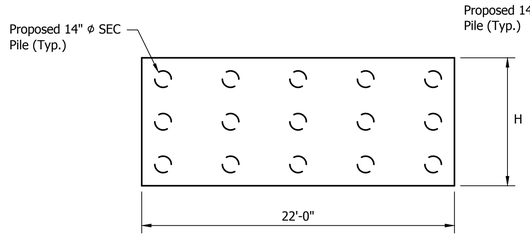

FOOTING PLAN

Piers 2, 4-5, 9-12, 14-18, 20

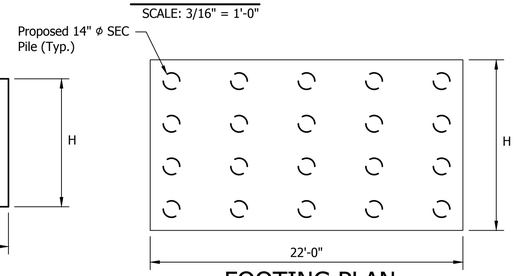

FOOTING PLAN

Piers 6

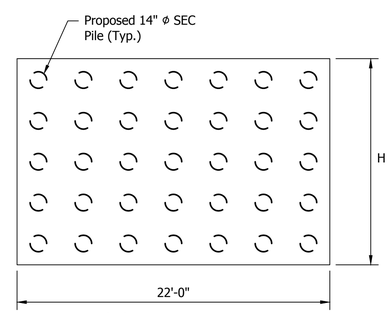

FOOTING PLAN

Piers 8

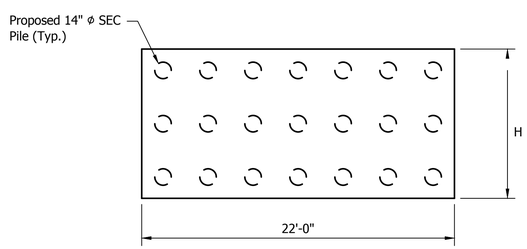

FOOTING PLAN

Piers 3, 13, 19

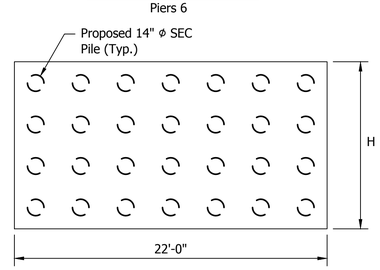

FOOTING PLAN

Piers 7

PIER DIMENSIONS

	VERTICAL DIMENSION				HORIZONTAL DIMENSION			
PIER	A	B	C	D	E	F	G	H
2	3.7	5	16.67	3	3	2	2.92	9
3	3	5	16.83	3	2	2	2.92	10
4	3	5	17	3	2	2	2.92	9
5	3	5	17	3	2	2	2.92	9
6	3	5	28.67	3.5	3.25	2	3.6	12
7	3	5	27.21	3.5	2	2	3.5	11.75
8	3	5	25.5	4.5	2	2	3.42	14.5
9	3	5	11.83	3	3.25	2	2.67	9
10	3	5	13.92	3	2	2	2.78	9
11	3	5	13.92	3	2	2	2.78	9
12	3	5	13.25	3	2	2	2.74	9
13	3	5	13.75	3	2	2	2.76	10.5
14	3	5	12.25	3	2	2	2.68	9
15	3	5	13	3	2.75	2	2.72	8.5
16	3	5	12.25	3	2	2	2.68	9
17	3	5	13.92	3	2	2	2.78	9
18	3	5	13.25	3	2	2	2.74	9
19	3	5	13.75	3	2	2	2.76	10.5
20	3.7	5	12.75	3	3	2	2.71	9

UNITED Consulting
1625 N. Post Road
Indianapolis, IN 46219
Phone 317-895-2585
Fax 317-895-2596
www.ucindy.com

RECOMMENDED FOR APPROVAL _____ DESIGN ENGINEER DATE

DESIGNED: MRL DRAWN: DJZ

CHECKED: BSF CHECKED: MRL

INDIANA
DEPARTMENT OF TRANSPORTATION

PIER DETAILS
I-65 OVER EAST FORK WHITE RIVER

HORIZONTAL SCALE	BRIDGE FILE
AS SHOWN	I-65-054-04651 DNBL & DSBL
VERTICAL SCALE	DESIGNATION
AS SHOWN	-
SURVEY BOOK	SHEETS
-	10 of 11
CONTRACT	PROJECT
R-28940	0501212

SUMMARY OF BRIDGE QUANTITIES

ITEM	CONCRETE			CONCRETE RAILING CLASS C		REINF. BARS	EPOXY COATED REINF. BARS	STRUCT. STEEL	ANCHOR PLATES MK-AP	PILES												AGGREGATE FOR END BENT BACKFILL	CAST IRON GRATES, BASINS,& FITTINGS	EXP. JOINT TYPE "SS"	CONCRETE BARRIER RAIL TRANS. TYPE "WGB"	CONC.STR.MEMBERS		BARRIER DELINEATORS	SURFACE SEAL **	MASONRY COATING **	MODIFIED EPOXY COATED THREADED BAR ASSEMBLIES	R.C. PAVEMENT 14 Inch	DENSE GRADED SUBBASE 6 Inch
	CLASS C SUPERSTR	CLASS A SUBSTR	CLASS B IN FTG.							CONC. STEEL SHELL ENCASED		REINF. CONC. STEEL SHELL ENCASED EPOXY COAT.		HP12x74 STEEL "H"		STEEL H EPOXY COATED		STEEL H REINF. CONC. ENCASED		PILE TIP STEEL H	CORED HOLES IN ROCK						BOX BEAMS TYPE	I BEAM TYPE III						
	cys.	cys.	cys.	cys.	lft.	lbs.	lbs.	lbs.	each	no.	lft.	no.	lft.	no.	lft.	no.	lft.	no.	lft.	each	no.	lft.	cys.	lbs.	lft.	ea.	lft.	lft.	each	sys.	sys.	each	lft.	lbs.
Totals																																		

** ESTIMATED QUANTITY

UNITED Consulting
1625 N. Post Road
Indianapolis, IN 46219
Phone 317-895-2585
Fax 317-895-2596
www.ucindy.com

RECOMMENDED FOR APPROVAL
DESIGN ENGINEER DATE

DESIGNED: MRL DRAWN: DJZ
CHECKED: BSF CHECKED: MRL

INDIANA
DEPARTMENT OF TRANSPORTATION

BRIDGE SUMMARY TABLE
I-65 OVER EAST FORK WHITE RIVER

HORIZONTAL SCALE	BRIDGE FILE
N/A	I-65-054-04651 DNBL & DSBL
VERTICAL SCALE	DESIGNATION
N/A	-
SURVEY BOOK	SHEETS
-	11 of 11
CONTRACT	PROJECT
R-28940	0501212