PROJECT	DESIGNATION
0501212	1592600 & 1592599
CONTRACT	BRIDGE FILE
R-28940	I65-061-04660 CNBL & JCSBL

INDIANA DEPARTMENT OF TRANSPORTATION

TRAFFIC DATA	I-65
A.D.T. (2019)	31,320 V.P.D.
A.D.T. (2039)	34,310 V.P.D.
D.H.V. (2039)	2,740 V.P.H.
DIRECTIONAL DISTRIBUTION	50%
TRUCKS	38% A.A.D.T.
	29% D.H.V.
DESIGN DATA	
DESIGN SPEED	70 M.P.H.
PROJECT DESIGN CRITERIA	PARTIAL RECONSTRUCTION 4R (FREEWAY)
FUNCTIONAL CLASSIFICATION	INTERSTATE
RURAL/URBAN	RURAL
TERRAIN	LEVEL
ACCESS CONTROL	FULL

INDEX

STRUCTURE	TYPE	SPAN AND SKEW	OVER	STATION
I65-061-04660 CNBL I65-061-04660 JCSBL	BRIDGE REHABILITATION TWIN CONTINUOUS REINFORCED CONCRETE SLAB BRIDGES	3 SPANS: 17'-3", 23'-0", 17'-3" SKEW: 20° LT.	SMALLS CREEK	STA. 2823+98.79 "A"

KIN DESIGNATION NUMBERS

PART	DESIGNATION	DESCRIPTION
1	0501212	I-65 ROAD PLANS
2	0501212	I-65 CROSS SECTIONS
3	0501212	I-65 TRAFFIC PLANS
4	1601732 & 1601733	I-65 OVER CSX RAILROAD
5	1592538 & 1592536	I-65 OVER MUTTON CREEK DITCH
6	1601840 & 1601970	I-65 OVER EAST FORK OF WHITE RIVER
7	1601841 & 1601920	I-65 OVER EAST FORK OF WHITE RIVER, OVERFLOW NO. 1
8	1592568 & 1592576	I-65 OVER EAST FORK OF WHITE RIVER, OVERFLOW NO. 2
9	1592575 & 1592589	I-65 OVER EAST FORK OF WHITE RIVER, OVERFLOW NO. 3
10	1592590 & 1592592	I-65 OVER L & I RAILROAD
11	1592595 & 1592594	I-65 OVER ABLE DITCH
12	1592600 & 1592599	I-65 OVER SMALLS CREEK
13	1700256	ENOS ROAD OVER I-65
13	1700257	CR 800 NORTH OVER I-65
13	1700258	REDDING ROAD OVER I-65
13	1700259	SR 11 OVER I-65
13	1700260	COUNTYLINE ROAD OVER I-65
13	1700261	CR 950 SOUTH OVER I-65
13	1700262	CR 625 SOUTH OVER I-65
14	1383528 & 1383529	I-65 OVER DENOIS CREEK

R-28940
Part 12 of 14

BRIDGE REHABILITATION PLANS

FOR SPANS OVER 20 FEET
INTERSTATE 65
OVER
SMALLS CREEK

PROJECT NO. 0501212 P.E.

PROJECT NO. 0501212 CONST.

RP 61+0.536

This Bridge Rehabilitation is on Interstate 65 over Smalls Creek
Located in Section 27, of Township 8 North, Range 5 East, Wayne Township,
in Bartholomew County Indiana.

R. 5 E.

T. 8 N.

PROJECT LOCATION
I65-061-04660 CNBL
I65-061-04660 JCSBL

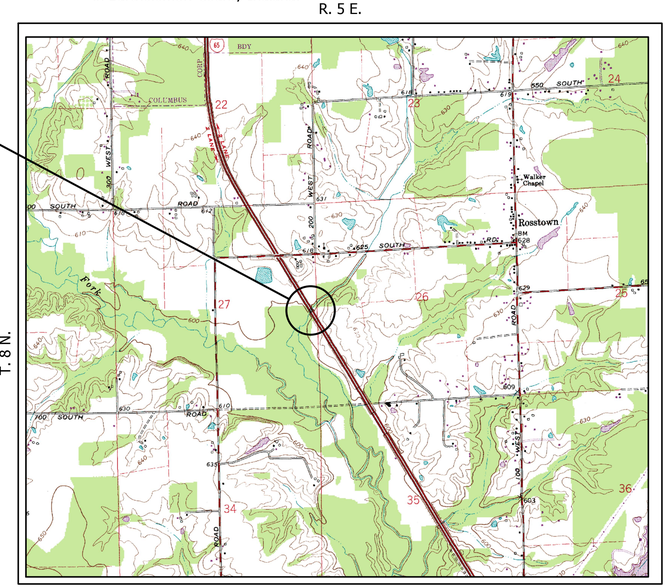

LOCATION MAP

Scale 1" = 2000'

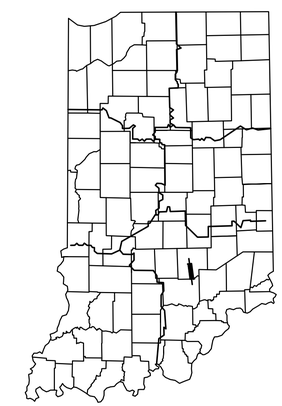

PROJECT LOCATION SHOWN BY
BARTHOLOMEW COUNTY

LATITUDE: 39°06'16.78" N LONGITUDE: 85°56'54.00" W

BRIDGE LENGTH :	0.54 MI.
ROADWAY LENGTH :	13.71 MI.
TOTAL LENGTH :	14.25 MI.
MAX GRADE:	2.8%

[INDIANA DEPARTMENT OF TRANSPORTATION STANDARD SPECIFICATIONS DATED 2016 TO BE USED WITH THESE PLANS]

UNITED Consulting
1625 N. Post Road
Indianapolis, Indiana 46219
Phone: 317-895-2585
Fax: 317-895-2596 Web: www.ucindy.com

PLANS PREPARED BY: UNITED CONSULTING 317-895-2585
PHONE NUMBER

CERTIFIED BY: DATE

APPROVED FOR LETTING: INDIANA DEPARTMENT OF TRANSPORTATION DATE

BRIDGE FILE	
I65-061-04660 CNBL & JCSBL	
DESIGNATION	
1592600 & 1592599	
SURVEY BOOK	SHEETS
	1 of 8
CONTRACT	PROJECT
R-28940	0501212

File Name: P:\C3D\MK16-465\Bridge\Bridges 25 & 26 - I-65 over Smalls Creek\Dwg\Title 25 & 26.dwg Plot Date: 4/25/2017 Plotted By: Zola, David

UTILITIES

GENERAL NOTES

INDEX

SHEET NO.	DESCRIPTION
1	TITLE
2	INDEX
3	MOT DETAILS
4	LAYOUT
5-6	GENERAL PLAN
7	SUBSTRUCTURE DETAILS
8	BRIDGE SUMMARY

REVISIONS

SHEET No.	DATE	REVISION

Indiana 811

Know what's below. Call before you dig.

CALL TWO WORKING DAYS BEFORE YOU DIG

Call 811 or 800-382-5544

UNITED Consulting

1625 N. Post Road
Indianapolis, IN 46219
Phone 317-895-2585
Fax 317-895-2596
www.ucindy.com

RECOMMENDED FOR APPROVAL

DESIGN ENGINEER DATE

DESIGNED: MRL DRAWN: DJZ

CHECKED: BSF CHECKED: MRL

INDIANA
DEPARTMENT OF TRANSPORTATION

INDEX
I-65 OVER SMALLS CREEK

HORIZONTAL SCALE	BRIDGE FILE
N/A	I65-061-04660 CNBL & JCSBL
VERTICAL SCALE	DESIGNATION
N/A	1592600 & 1592599
SURVEY BOOK	SHEETS
-	2 of 8
CONTRACT	PROJECT
R-28940	0501212

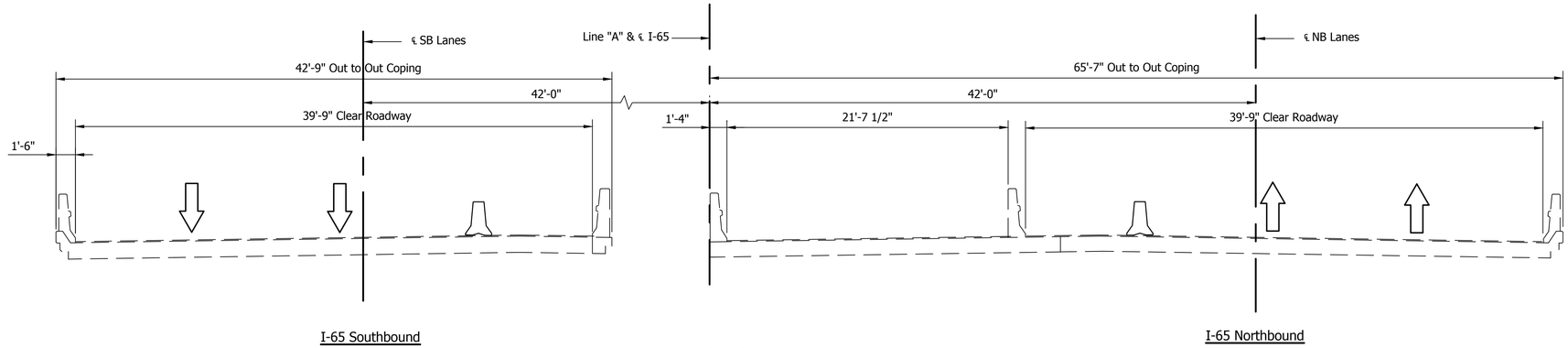

PHASE 2

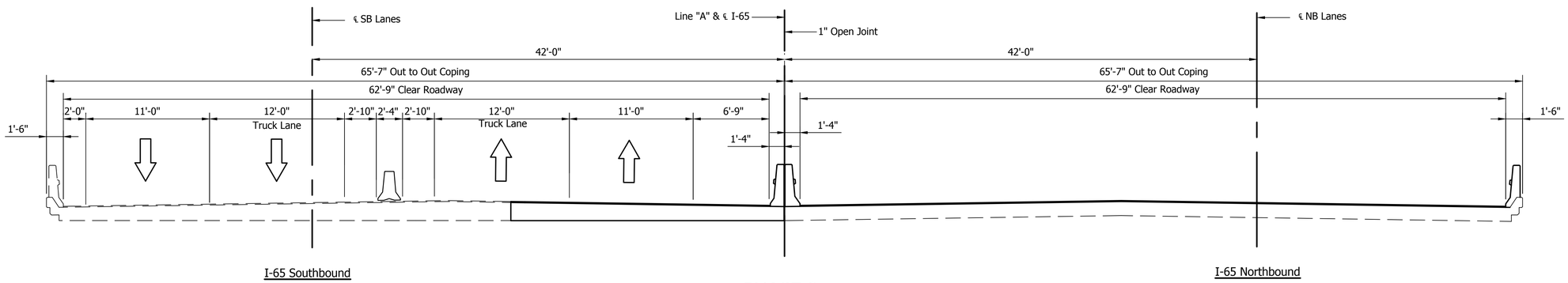

PHASE 3

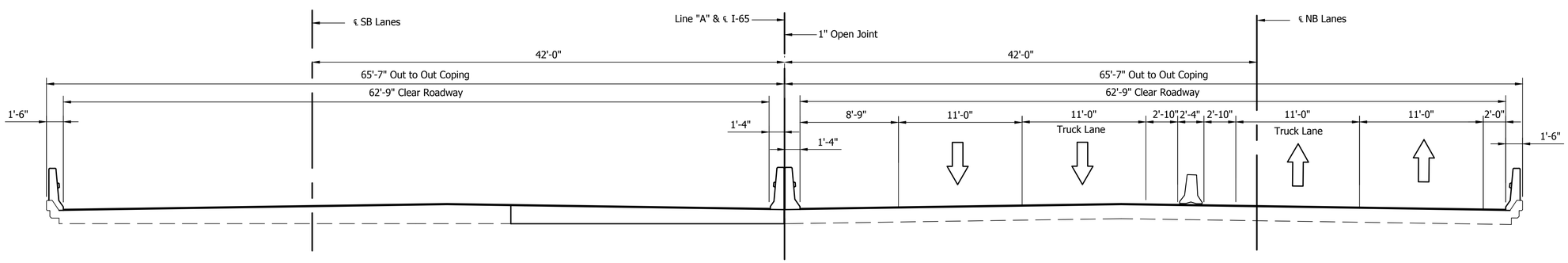

PHASE 4

UNITED Consulting
1625 N. Post Road
Indianapolis, IN 46219
Phone 317-895-2585
Fax 317-895-2596
www.ucindy.com

RECOMMENDED FOR APPROVAL _____ DESIGN ENGINEER DATE

DESIGNED: MRL DRAWN: DJZ
CHECKED: BSF CHECKED: MRL

INDIANA
DEPARTMENT OF TRANSPORTATION

MAINTENANCE OF TRAFFIC
I-65 OVER SMALLS CREEK

HORIZONTAL SCALE	BRIDGE FILE
3/16" = 1'-0"	I65-061-04660 CNBL & JCSBL
VERTICAL SCALE	DESIGNATION
3/16" = 1'-0"	1592600 & 1592599
SURVEY BOOK	SHEETS
-	3 of 8
CONTRACT	PROJECT
R-28940	0501212

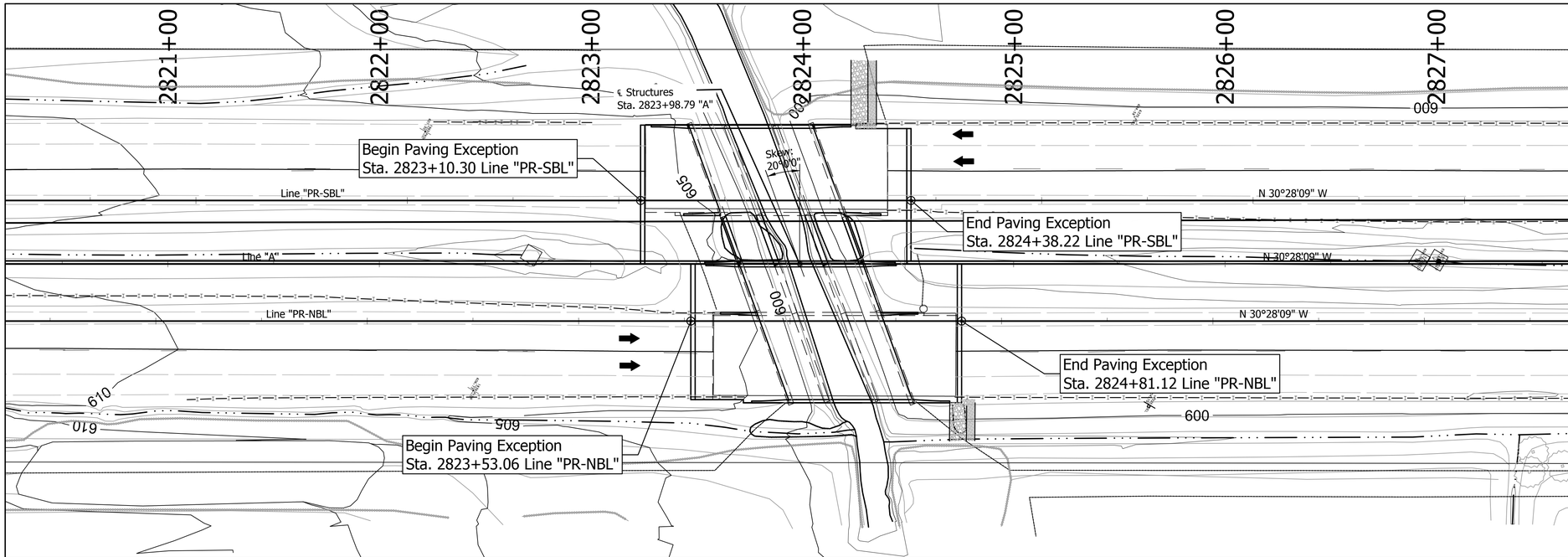

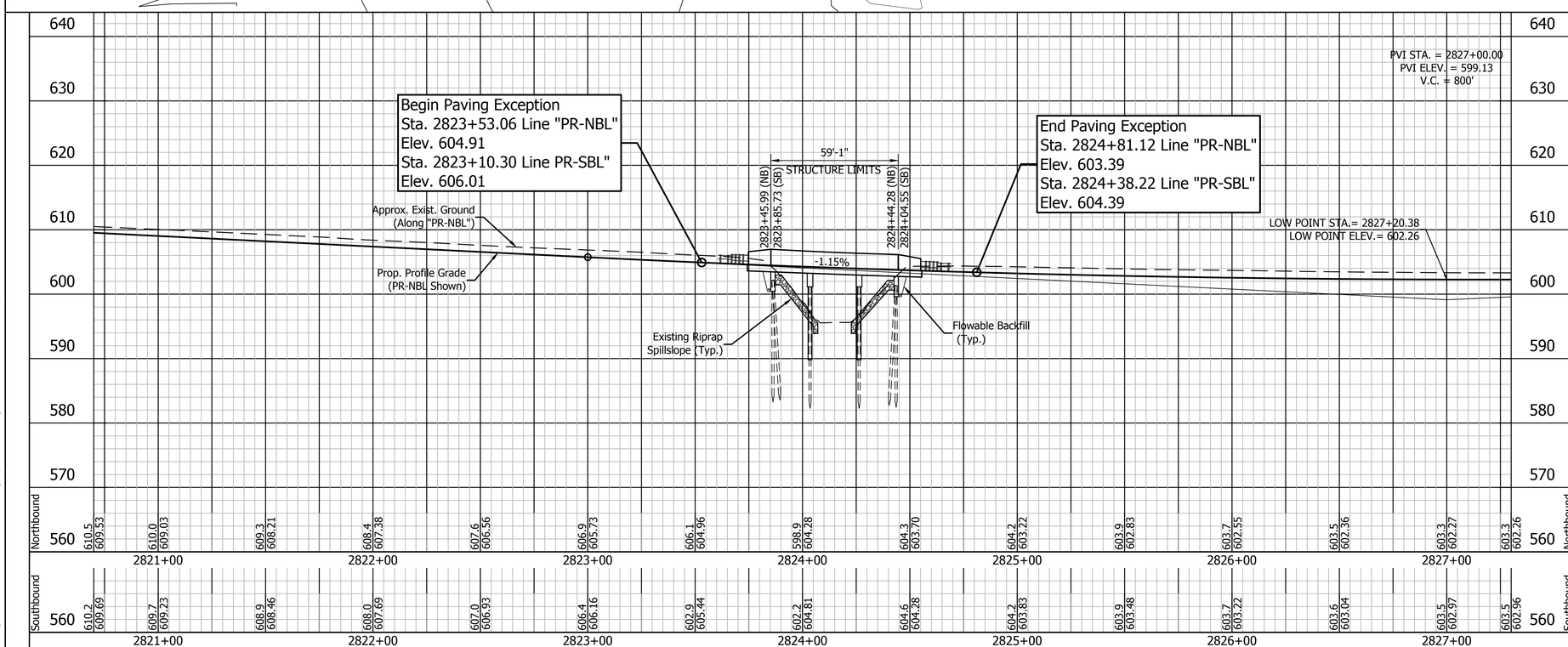

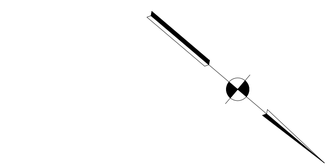

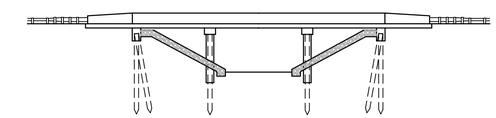

Existing Clear Roadway = 39'-9"
Portions of existing End Bents, Piers, and Bridge Deck to be removed.

EXISTING STRUCTURE

No Scale

Notes: For R/W, Earthwork Summary, and Additional Information see Roadway Plans, Des. No. 0501212.

TWIN CONTINUOUS REINFORCED CONCRETE
SLAB BRIDGES
3 SPANS: 17'-3", 23'-0", 17'-3"
65'-7" CLEAR ROADWAY
SKEW: 20°00'00" LEFT
I-65 OVER SMALLS CREEK

UNITED Consulting
1625 N. Post Road
Indianapolis, IN 46219
Phone 317-895-2585
Fax 317-895-2596
www.ucindy.com

RECOMMENDED FOR APPROVAL
DESIGN ENGINEER DATE

DESIGNED: MRL DRAWN: DJZ
CHECKED: BSF CHECKED: MRL

INDIANA
DEPARTMENT OF TRANSPORTATION

LAYOUT
I-65 OVER SMALLS CREEK

HORIZONTAL SCALE	BRIDGE FILE
1" = 30'	I65-061-04660 CNBL & JCSBL
VERTICAL SCALE	DESIGNATION
1" = 10'	1592600 & 1592599
SURVEY BOOK	SHEETS
-	4 of 8
CONTRACT	PROJECT
R-28940	0501212

File Name: P:\CSD\MK16-465\Bridge\Bridges 25 & 26 - I-65 over Smalls Creek\Dwg\Layout 25 & 26.dwg Plot Date: 4/25/2017 Plotted By: Zola, David

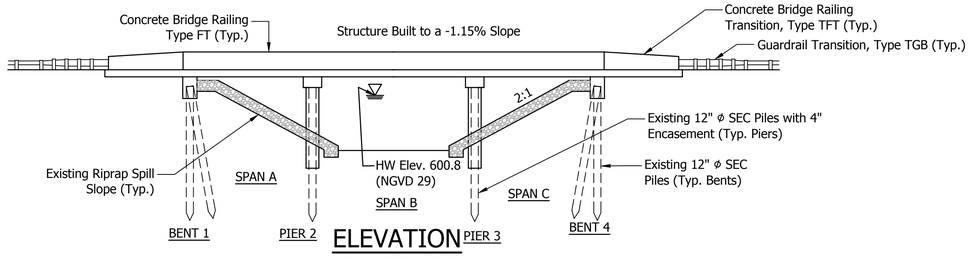

ELEVATION

Scale: 3/32" = 1'-0"

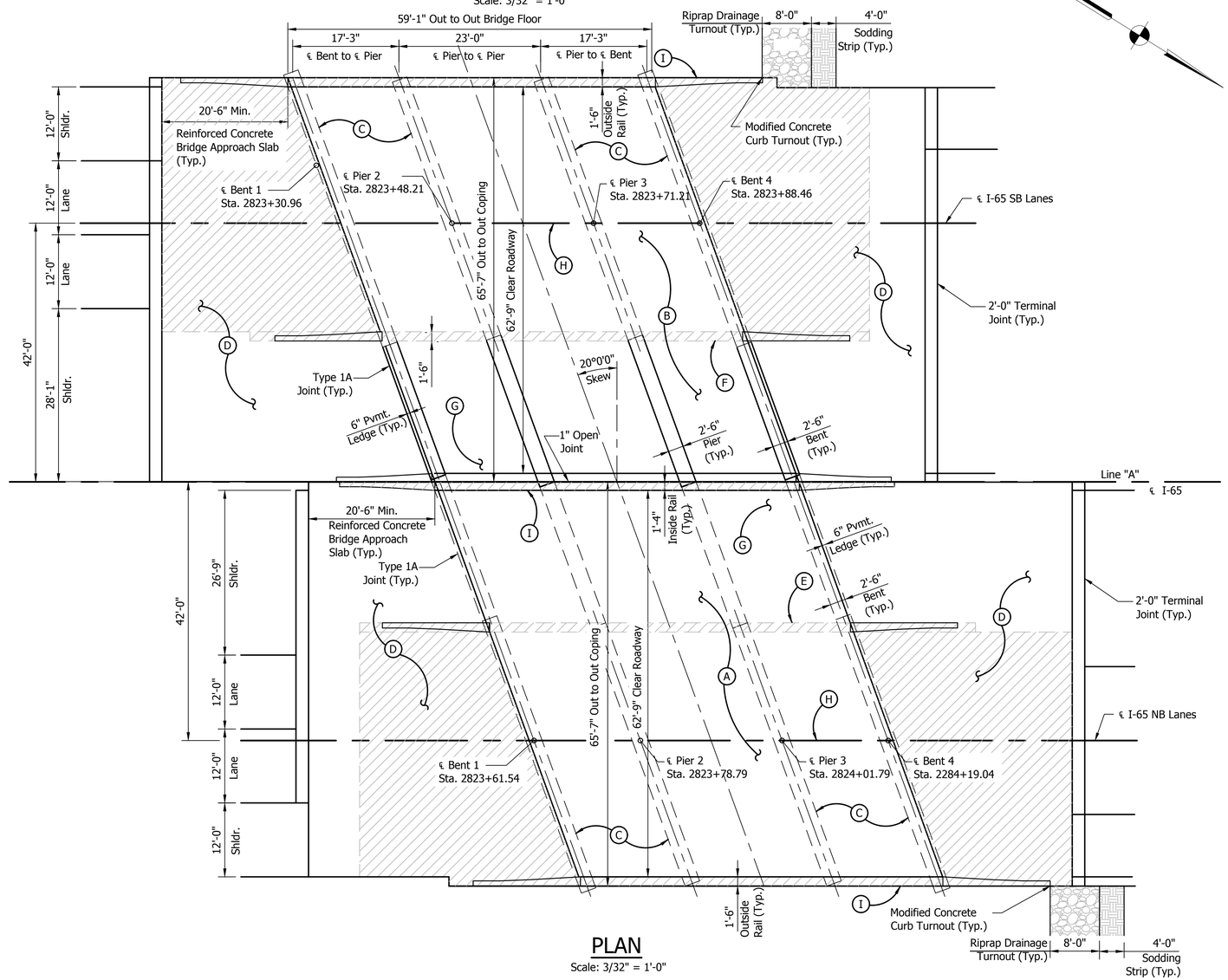

PLAN

Scale: 3/32" = 1'-0"

GENERAL NOTES

1. Existing plans for this structure are on file in the records unit of the Indiana Department of Transportation as Bridge File I65-061-04660 BNBL & JBSBL.
2. Where new work is to be fitted to old work, the Contractor shall check all dimensions and conditions in the field and report any discrepancies to the Engineer and assume responsibility for their correctness and fit of the new part to the old.
3. Reinforcing steel covering shall be 2 1/2" in top and 1" min. in bottom of floor slabs, and 2" in all other parts, unless noted.
4. Surface seal all exposed surfaces of approach slabs, face of deck coping and outer 6" of the underside of deck.
5. Stations shown are from the existing plans on file. The stations will be updated for the proposed alignment for Final Deign.

DESIGN DATA

Designed for HS-20-44 loading in accordance with 2002 AASHTO Standard Specifications for Highway Bridges 17th Edition and all Subsequent Interim Specifications.

ULTIMATE DESIGN STRESSES

Class "A" Concrete	f'c = 3,500 p.s.i.
Class "B" Concrete	f'c = 3,000 p.s.i.
Class "C" Concrete	f'c = 4,000 p.s.i.
Reinforcing Steel (Grade 60)	fy = 60,000 p.s.i.

LEGEND

- (A) Remove the existing overlay, surface mill the existing surface and perform hydro-demolition to remove any unsound concrete, perform partial and full depth patching at all delaminated areas, and place a variable depth latex modified or microsilica concrete overlay over the entire bridge deck.
- (B) Remove the existing overlay, surface mill the existing surface and perform hydro-demolition to remove any unsound concrete, perform partial and full depth patching at all delaminated areas, widen the southbound superstructure and substructure toward the median side, and place a variable depth latex modified or microsilica concrete overlay over the entire dridge deck.
- (C) Patch piers, superstructure, and undersides of deck as necessary to repair all delamination and spalling.
- (D) Remove and replace the existing reinforcing concrete approach slabs.
- (E) Remove the existing Bridge Railing and Patch the bridge deck under rail locations.
- (F) Remove existing Bridge railing and 1'-6" of the bridge coping.
- (G) Extend Riprap across median and widen 2' outside bridge deck.
- (H) Place new Snowplowable Pavement Markings.
- (I) Remove and Replace the existing bridge railing.

Limits of Removal

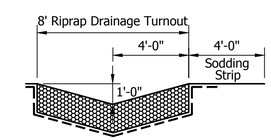

RIPRAP DRAINAGE TURNOUT

No Scale

TWIN CONTINUOUS REINFORCED CONCRETE SLAB BRIDGE
3 SPANS: 17'-3", 23'-0", 17'-3"
65'-7" CLEAR ROADWAY
SKEW: 20°00'00" LEFT
I-65 OVER SMALLS CREEK

UNITED Consulting
1625 N. Post Road
Indianapolis, IN 46219
Phone 317-895-2585
Fax 317-895-2596
www.ucindy.com

RECOMMENDED FOR APPROVAL _____ DESIGN ENGINEER DATE

DESIGNED: MRL DRAWN: DJZ
CHECKED: BSF CHECKED: MRL

INDIANA DEPARTMENT OF TRANSPORTATION

GENERAL PLAN
I-65 OVER SMALLS CREEK

HORIZONTAL SCALE	BRIDGE FILE
AS SHOWN	I65-061-04660 CNBL & JCSBL
VERTICAL SCALE	DESIGNATION
AS SHOWN	1592600 & 1592599
SURVEY BOOK	SHEETS
-	5 of 8
CONTRACT	PROJECT
R-28940	0501212

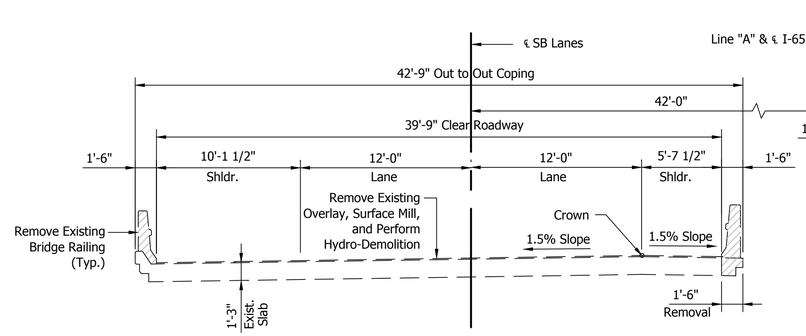

EXISTING SOUTHBOUND TYPICAL SECTION

Scale: 3/16" = 1'-0"

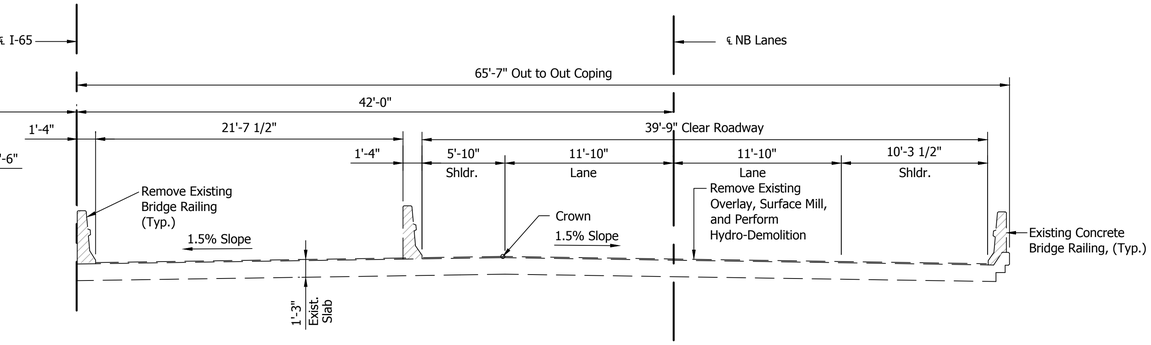

EXISTING NORTHBOUND TYPICAL SECTION

Scale: 3/16" = 1'-0"

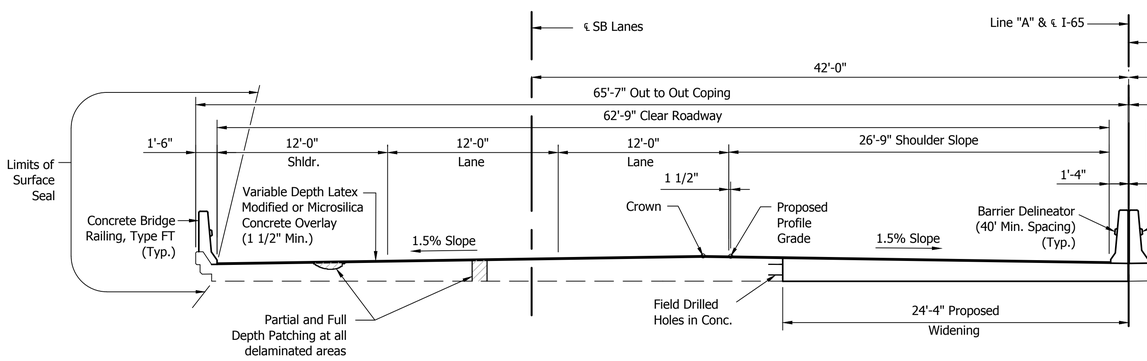

PROPOSED SOUTHBOUND TYPICAL SECTION

Scale: 3/16" = 1'-0"

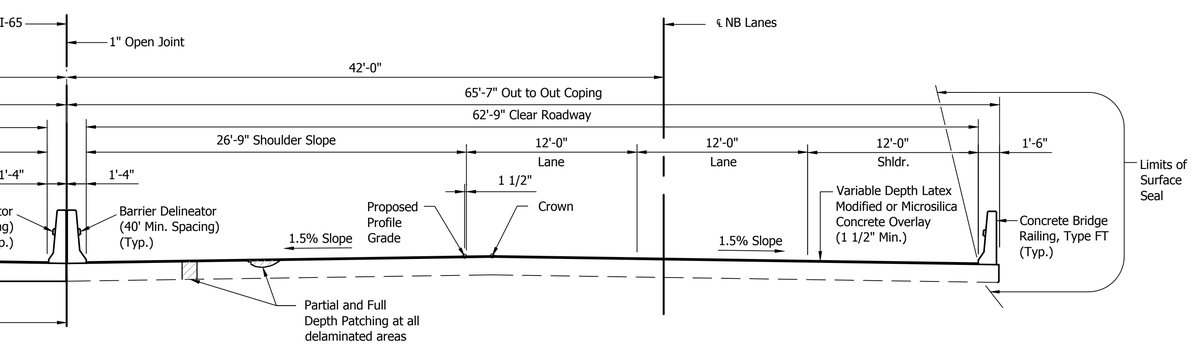

PROPOSED NORTHBOUND TYPICAL SECTION

Scale: 3/16" = 1'-0"

Limits of Removal

TWIN CONTINUOUS REINFORCED
CONCRETE SLAB BRIDGE
3 SPANS: 17'-3", 23'-0", 17'-3"
65'-7" CLEAR ROADWAY
SKEW: 20°00'00" LEFT
I-65 OVER SMALLS CREEK

UNITED Consulting
1625 N. Post Road
Indianapolis, IN 46219
Phone 317-895-2585
Fax 317-895-2596
www.ucindy.com

RECOMMENDED FOR APPROVAL
DESIGN ENGINEER DATE

DESIGNED: MRL DRAWN: DJZ
CHECKED: BSF CHECKED: MRL

INDIANA
DEPARTMENT OF TRANSPORTATION

GENERAL PLAN
I-65 OVER SMALLS CREEK

HORIZONTAL SCALE	BRIDGE FILE
AS SHOWN	I65-061-04660 CNBL & JCSBL
VERTICAL SCALE	DESIGNATION
AS SHOWN	1592600 & 1592599
SURVEY BOOK	SHEETS
-	6 of 8
CONTRACT	PROJECT
R-28940	0501212

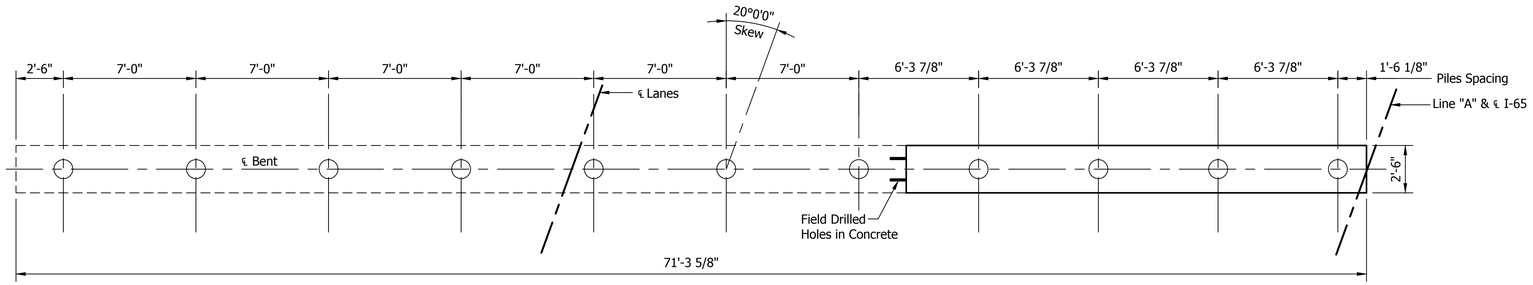

SOUTHBOUND TYPICAL BENT PLAN

Scale: 1/4" = 1'-0"
(Bent 4 shown, Bent 1 same by opposite hand)

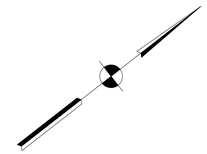

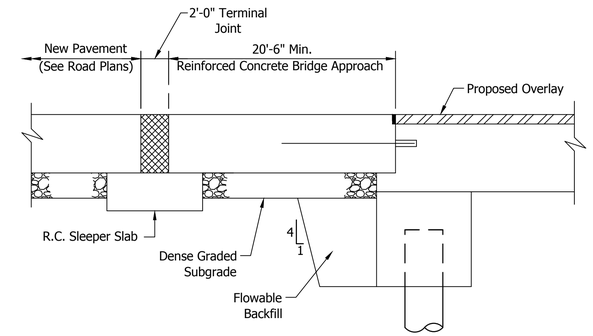

HALF LONGITUDINAL SECTION

SCALE: NONE

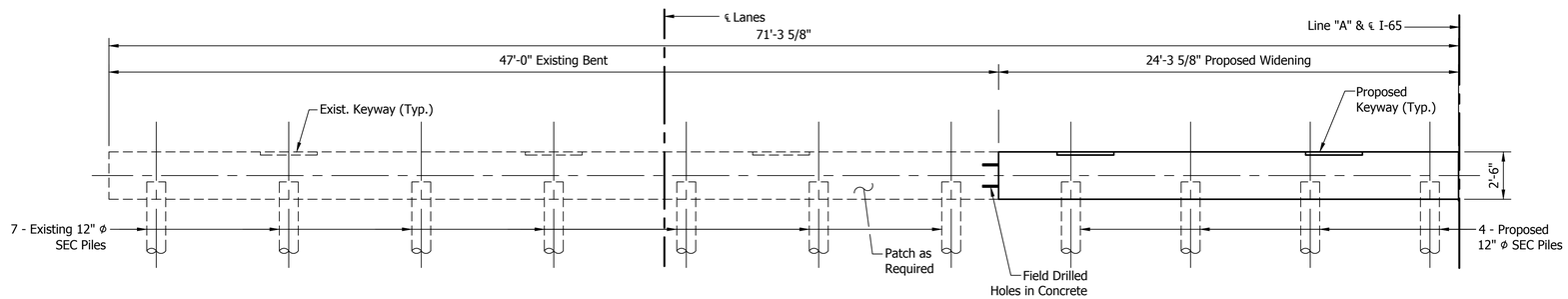

SOUTHBOUND TYPICAL BENT SECTION

Scale: 1/4" = 1'-0"
(Bent 4 shown, Bent 1 same by opposite hand)

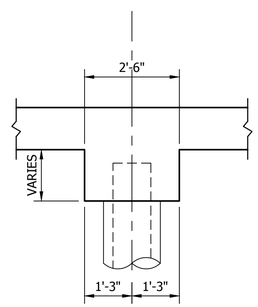

SECTION B-B

Scale: 1/2" = 1'-0"

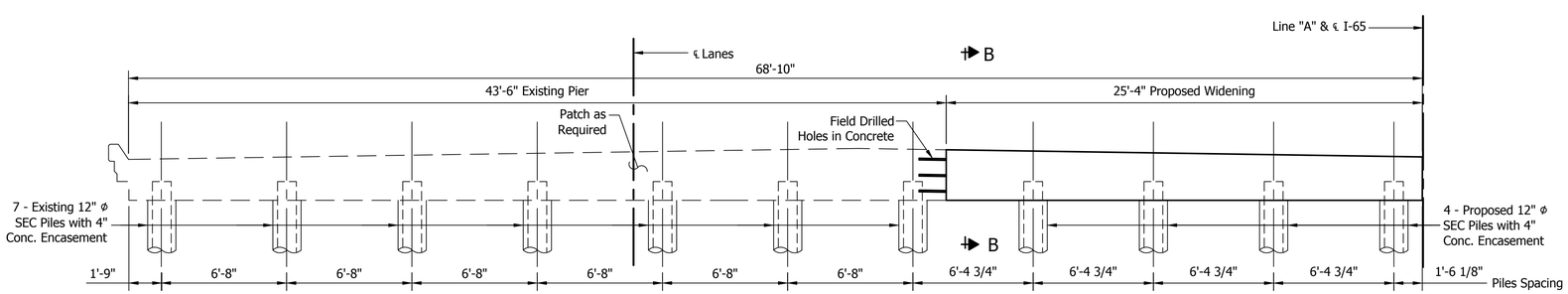

SOUTHBOUND TYPICAL PIER ELEVATION

Scale: 1/4" = 1'-0"

UNITED Consulting
1625 N. Post Road
Indianapolis, IN 46219
Phone 317-895-2585
Fax 317-895-2596
www.ucindy.com

RECOMMENDED FOR APPROVAL _____ DESIGN ENGINEER DATE

DESIGNED: MRL | DRAWN: DJZ
CHECKED: BSF | CHECKED: MRL

INDIANA
DEPARTMENT OF TRANSPORTATION

SUBSTRUCTURE DETAILS
I-65 OVER SMALLS CREEK

HORIZONTAL SCALE	BRIDGE FILE
AS SHOWN	I65-061-04660 CNBL & JCSBL
VERTICAL SCALE	DESIGNATION
AS SHOWN	1592600 & 1592599
SURVEY BOOK	SHEETS
-	7 of 8
CONTRACT	PROJECT
R-28940	0501212

SUMMARY OF BRIDGE QUANTITIES

ITEM	CONCRETE			CONCRETE RAILING CLASS C		REINF. BARS	EPOXY COATED REINF. BARS	STRUCT. STEEL	ANCHOR PLATES MK-AP	PILES												AGGREGATE FOR END BENT BACKFILL	CAST IRON GRATES, BASINS,& FITTINGS	EXP. JOINT TYPE "SS"	CONCRETE BARRIER RAIL TRANS. TYPE "WGB"	CONC.STR.MEMBERS		BARRIER DELINEATORS	SURFACE SEAL **	MASONRY COATING **	MODIFIED EPOXY COATED THREADED BAR ASSEMBLIES	R.C. PAVEMENT 14 Inch	DENSE GRADED SUBBASE 6 Inch
	CLASS C SUPERSTR	CLASS A SUBSTR	CLASS B IN FTG.							CONC. STEEL SHELL ENCASED		REINF. CONC. STEEL SHELL ENCASED EPOXY COAT.		HP12x74 STEEL "H"		STEEL H EPOXY COATED		STEEL H REINF. CONC. ENCASED		PILE TIP STEEL H	CORED HOLES IN ROCK						BOX BEAMS TYPE	I BEAM TYPE III						
	cys.	cys.	cys.	cys.	lft.	lbs.	lbs.	lbs.	each	no.	lft.	no.	lft.	no.	lft.	no.	lft.	no.	lft.	each	no.	lft.	cys.	lbs.	lft.	ea.	lft.	lft.	each	sys.	sys.	each	lft.	lbs.
Totals																																		

** ESTIMATED QUANTITY

UNITED Consulting
1625 N. Post Road
Indianapolis, IN 46219
Phone 317-895-2585
Fax 317-895-2596
www.ucindy.com

RECOMMENDED FOR APPROVAL
DESIGN ENGINEER DATE

DESIGNED: MRL DRAWN: DJZ
CHECKED: BSF CHECKED: MRL

INDIANA
DEPARTMENT OF TRANSPORTATION

BRIDGE SUMMARY TABLE
I-65 OVER SMALLS CREEK

HORIZONTAL SCALE	BRIDGE FILE
N/A	I65-061-04660 CNBL & JCSBL
VERTICAL SCALE	DESIGNATION
N/A	1592600 & 1592599
SURVEY BOOK	SHEETS
-	8 of 8
CONTRACT	PROJECT
R-28940	0501212