DRAINAGE IMPROVEMENTS
HARMONIE STATE PARK
Posey County

DNR PROJECT NUMBER
ENG2701728041

October 2026

TABLE OF CONTENTS

A. BIDDING AND CONTRACT REQUIREMENTS

Title Sheet	1 page
Table of Contents	1 page

PRE-BID DOCUMENTATION

DAPW 28 – Notice to Bidders	1 page
DAPW 30 – Instructions to Bidders	6 pages
Davis-Bacon Wage Determination (if required)	

BID DOCUMENTATION

DAPW 12 – Contractor's Affidavit of Subcontractor Employed	1 page
DAPW 13 – Contractor's Bid Form	3 pages
DAPW 14 – Signature Affidavit	1 page
DAPW 15A – Bid Bond	1 page
DAPW 26 SUP 2 – MBE/WBE/IVOSB Participation Plan and Good Faith Efforts Worksheet	3 pages
DAPW 41 – Certificate of Corporate Resolution	1 page
DAPW 121 – Contractor's Non-Collusion Statement	1 page
SF 44260 – Drug-Free Workplace Certification	1 page
DAPW 150A – Contractor's Employee Drug Testing	2 pages

PRE-CONTRACT DOCUMENTATION

DAPW 11 – Domestic Steel Affidavit	1 page
DAPW 15 – Contractor's Bond for Construction	1 page
DAPW 16 – Contractor's Certificate of Insurance	1 page

CONTRACT DOCUMENTATION

DAPW 26 – General Conditions of the Contract Including Liquidated Damages	21 pages
DAPW 26 SUP 1 – MBE/WBE/IVOSB Participation Policy	6 pages
DAPW 33 – Standard Agreement for Construction Project	18 pages

B. LIST OF DRAWINGS

C. SPECIFICATIONS

STATE OF INDIANA

Mike Braun, Governor

DEPARTMENT OF ADMINISTRATION
Public Works Division
402 West Washington Street, Room W462
Indiana Government Center – South
Indianapolis, Indiana 46204-2746
PHONE: (317) 232-3001

NOTICE TO BIDDERS

BY STATE OF INDIANA DEPARTMENT OF ADMINISTRATION, PUBLIC WORKS DIVISION FOR A PUBLIC WORKS CONSTRUCTION PROJECT ESTIMATED AT ONE HUNDRED FIFTY THOUSAND DOLLARS OR ABOVE

SECURED ELECTRONIC BIDS FOR:

Public Works Project No. XXX-XXX
XXXXXXXXXXXXXXXXXXXXXXXXXXXXXXXXXXXX
XXXXXXXXXXXXXXXXXXXXXX

will be received from Contractors, holding a current Certificate of Qualification, at Department of Administration, Public Works Division Email Bid Box-publicworksbids@idoa.in.gov
(note, do not cc: any other party)
Subject line MUST contain "Bid- xxxxxxxx-xx-xxx-xx; - (Project Name) - (Your firm)"

Bid File (PDF) MUST be named-"(Bidding Firm name) Bid-xxxxxxxx-xx-xxx-xx; - (Proj Name)" and not exceed 9Mb

Until 1:31 P.M (Indianapolis Time), (Day), (Date), 202?, after which all bids will be publicly opened and read online in a Microsoft Teams Live Event- ***(PM to insert Teams Live event info/Link here-PM to set MS Live event for 30 mins following Bid due to allow time to verify certifications and permit electronic bids to clear IOT/State Virus Detection software)***

Minority Contractors are encouraged to submit bids on this project as a prime contractor or through a prime contractor.

Copies of the detailed Instructions to Bidders and Drawings and/or Specifications dated XXXXX, 2020 may be obtained from: Reprographix.com ePlanroom (Construction Document Distribution) link **for a cost of $XX.00 per set, or from the office of: (*Insert designer's contact information*)**

Bids shall be taken from Prime Contractors pre-qualified by the Public Works Certification Board in the following classification(s): XXXXXXXXXXX, or xxxxxxxxxxxxxxxx

The Specified construction period is XXX calendar days. The State of Indiana reserves the right to reject any and all bids.

Project Goal of 7% MBE, 5% WBE and 3% IVOSB. Link: https://www.in.gov/idoa/mwbe/2494.htm

Project Manager: _____
Associate State XXXXXX DAPW

Director of Public Works: _____
Director

Pre-Bid Information **XXXXX**
xxxxxxxxxxxxxxxxxxxxxxxxxxxxxxxxxxxx
xxxxxxxxxxxxxxxxxxxxxxxxxxxxxxxxxxxx
xxxxxxxxxxxxxxxxxxxxxxxxxxxxxxxxxxxx

INSTRUCTIONS TO BIDDERS

PROJECT ESTIMATED BY DEPARTMENT OF ADMINISTRATION, PUBLIC WORKS DIVISION
TO BE BID AT ONE HUNDRED FIFTY THOUSAND DOLLARS ($150,000) AND ABOVE

01 GENERAL

A. This project is estimated by the Public Works Division, Indiana Department of Administration (the Owner), as stated in the Notice to Bidders, at One Hundred Fifty Thousand Dollars ($150,000) and above.

B. QUALIFICATION BY THE CERTIFICATION BOARD IS REQUIRED FOR THIS PROJECT PRIOR TO BID OPENING DATE. For information and procedure contact Executive Secretary, Certification Board, Indiana Department of Administration, 402 W. Washington St., Room W462, Indianapolis, Indiana 46204, E-mail: _____ or phone (317) 232-3005.

02 PROJECT NUMBER, DESCRIPTION AND LOCATION is as stated in the Notice to Bidders.

03 TITLE AND DEFINITIONS

Said building and/or land upon which it stands is the property of the State of Indiana. All references to the title owner of said property hereinafter will be by the term "State" and all references to the person, firm, or corporation awarded the contract for the project will be by the term "Contractor". All references to Designer shall refer to the consulting person or firm employed to contract with the Public Works Division, Indiana Department of Administration to provide architectural, engineering or other consulting services for the project, or to the Public Works Division. The preparation and issuance of contracts for this project are the responsibility of the Commissioner of the Indiana Department of Administration acting with approval of the Governor.

Contract: A written agreement between two or more parties enforceable by law.

Contractor: A person who has entered into or seeks to enter into a contract with Public Works Division.

Prime Contractor: A person or business which is primarily responsible for providing goods and service or performing a specific service, etc. under contract. A prime contractor can also be a Minority Business Enterprise, a Women's Business Enterprise or an Indiana Veteran Owned Small Business Enterprise.

Subcontractor: A person or a business who has a direct contract with a prime contractor who is under contract to provide goods and services or perform a specific service.

Joint Venture: An association of two or more businesses to carry out a single business enterprise for profit for which purpose they combine their property, capital, efforts, skills and knowledge.

Manufacturer: A supplier that produces goods from raw materials or substantially alters them before resale.

Minority Business Enterprise (MBE) and Women's Business Enterprise (WBE): A business concern which is certified as at least fifty-one percent (51%) owned and controlled by one or more of the individuals classified as a minority group which includes: African Americans, Hispanic Americans, Native Americans, Hispanic Americans, Asian Americans, and other racial minority groups as defined by 13 CFR 124.103, or at least fifty-one percent (51%) owned and controlled by a woman or women.

Supplier: Any person or entity engaged to furnish goods, materials and/or equipment, but no on-site labor, is capable of furnishing such goods, materials and/or equipment either directly from its own stock or by ordering materials and/or equipment directly from a manufacturer, and is engaged to furnish such goods, materials and/or equipment directly to a prime contractor or one of its subcontractors.

Indiana Veteran Owned Small Business Enterprise (IVOSB): means an Indiana small business enterprise which is certified as at least fifty-one percent (51%) owned and controlled by a veteran.

04 PRE-BIDDING, BIDDING AND POST BIDDING REQUIREMENTS

A. The Director, Public Works Division, will authorize the Designer to issue bidding documents, construction documents and addenda to bidders.

B. It is recommended that all Bidders visit the site prior to submitting bid and become thoroughly familiar with the existing site conditions and work to be performed, as indicated in the bidding documents, construction documents and addenda. Extra compensation or extension of time will not be allowed for failure to examine the site prior to bidding.

C. During the bidding period, should questions arise as to the meaning of any part of the bidding documents, construction documents or addenda that may affect the Bidder, the Bidder shall contact the Designer and/or Public Works Division and

submit a written request for clarification. The Designer and/or Public Works Division will make such clarification only by written Addendum that will be emailed to each document holder or may be obtained at the office of the Designer and/or Public Works Division. By submitting a bid, the Bidder acknowledges procurement of all Addenda. No written request for clarification will be accepted by the Designer and/or Public Works Division later than fourteen (14) calendar days prior to the scheduled bid date.

D. Bid as described in Contractor's Bid (DAPW 13) shall include Base Bid (in figures and in words) and Alternates as specified in Section entitled Alternates. In verifying bids, word amounts shall have precedence over figure amounts.

E. Alternate amount(s) shall be listed where indicated. Add Alternates are not to be included in the Base Bid Scope of Work. Deduct Alternates are to be included in the Base Bid Scope of Work. The bid form must be signed. Note that by signing the bid document, the Bidder is acknowledging the procurement of all addenda and is a certifying that the bid recognizes all items in all addenda.

F. A bid by a corporation shall be in the legal name of the corporation followed by the word "by" and the signature of the president. The secretary of the corporation shall sign indicating his/her authority to sign. A Certificate of Corporate Resolution (DAPW 41) is required with and as a part of the bid if anyone other than the president of the corporation is signing bid documents.

G. *The Form 96A-Questionnaire and Financial Statement is no longer required to be submitted.* The Director, Public Works Division reserves the right to request additional financial information or contractor experience as a basis for rejection of bid or award of contract.

H. Each Bidder must file with his bid a Non-Collusion Statement (DAPW-121) signed by the same authorized person(s) who signed the bid.

I. Each Bidder must file with his bid a completely filled in and executed Bid Bond (DAPW 15A) in accordance with IC 4-13.6-7-5. The bid bond penal sum shall be the minimum amount of ten percent (10%) of the bid including all additive alternates.

J. Each Bidder must file with his bid a completed MBE/WBE/IVOSB Participation Plan (DAPW 26) and Good Faith Effort Work Sheet (DAPW 26 SUP2). Refer to the Supplement to the General Conditions for MBE/WBE/IVOSB Participation Policy (DAPW 26 SUP1) for specific requirements.

K. Each Bidder must file with his bid, the completed Contractor's Affidavit of Subcontractors Employed (DAPW 12) only if he proposes to perform any work with a subcontract amount of $150,000.00 or more.

L. Each bidder must file with his bid an Employee Drug Testing Plan (DAPW 150A) in accordance with IC 4-13-18 or evidence that the contractor is subject to a collective bargaining agreement containing drug testing requirements that comply with IC 4-13-18.

M. Each Bidder must include his Federal ID number or Social Security number on page 1 of 3 of the Bid Form (DAPW 13). All required bid documents must contain original handwritten signatures.

N. All documents required by statute, rule or these instructions to be included in the bid must be submitted together in a single email fie, plainly marked on the subject line and in the email file with the Name of Bidder, Project Identification, Project Number, Bid Time and Bid Date. Bids shall be rejected if all required documents are not in the single email file.

O. A Bidder with proper identification may withdraw his bid at any time prior to the scheduled time for receipt of the bids; however, no bid may be withdrawn without written consent of the Director, Public Works Division for a *period of sixty (60) days after the date of the bid opening*, or unless extended in accordance with IC 4-13.6-6-4. Bids received after the designated due time for any reason, shall be rejected and returned unopened to the Bidder. The Director, Public Works Division, reserves the right to reject any or all bids.

P. Subcontractors whose work will equal or exceed One Hundred Fifty Thousand Dollars ($150,000.00) must attain a Certificate of Qualification by the Certification Board before commencing any work on this project. Note paragraph 01. (B) above.

Q. All Bidders (corporations or other business entities) must be in good standing with the Indiana Secretary of State.

05 SIGNATURE AFFIDAVIT

A. A Signature Affidavit (DAPW 14) containing the Bidder's authorized signature(s), properly notarized, may be submitted as a signature supplement to all other bid documents, except the bid bond, including:

1. Contractor's Bid (DAPW 13)
2. Non-Collusion Statement (DAPW121)
3. Contractor’s Affidavit of Subs Employed (DAPW 12)
4. MBE/WBE/IVOSB Participation Plan and Good Faith Effort Worksheet (DAPW 26 SUP 2)

B. All documents herein before required with the bid may be unsigned if the signature affidavit is submitted, except for the BID BOND. BIDDER MUST SIGN THE BID BOND.

NOTE: SIGNING THE SIGNATURE AFFIDAVIT OR BID FORM IS ACKNOWLEDGMENT OF PROCUREMENT OF ALL ADDENDA AND CERTIFICATION BY BIDDER THAT THE BID RECOGNIZES ALL ITEMS IN ALL ADDENDA.

06 WORK BY CONTRACTOR

The Contractor shall perform a minimum of 15% of the value of work (measured in dollars of the total contract price) with his own forces, and not more than 85% of the value of work is to be subcontracted.

07 SUBSTITUTIONS

The materials, products, systems and equipment described in the bidding documents, construction documents andaddenda establish a standard or required function, dimension, appearance and quality that shall also be met by any proposed substitution. No substitution by manufacturer, or trade name of product named, or of a quality specified will be considered unless written request for approval has been submitted by the Bidder and has been received by the Designer and/or Public Works Division at least fourteen (14) calendar days prior to the date for receipt of bids. Each such request shall include the name of the material or equipment for which it is to be substituted and a complete description of the proposed substitute including drawings, cuts, performance and test data and any other information necessary for an evaluation. A statement setting forth any changes in other materials, equipment or work that incorporation of the substitutewould require shall be included. The burden of proof of the merit of the proposed substitute is upon the proposer. The Designer and/or Public Works Division decision of approval or disapproval of the proposed substitution shall be final. Products, materials or systems not specified or approved prior to bidding, shall not be accepted for use in this project. All such substitutions accepted shall be acknowledged by addendum. See paragraph. 04 (C).

08 NONDISCRIMINATION

Pursuant to IC 22-9-1-10, the Contractor and subcontractors, if any, shall not discriminate against any employee or applicant for employment, to be employed in the performance of this contract, with respect to his hire, tenure, terms, conditions or privileges of employment, or any matter directly or indirectly related to employment, because of his race, religion, color, sex, disability, national origin, or ancestry. Breach of this covenant may be regarded as a material breach of the contract. Pursuant to IC 5-16-6-1, the contractor agrees:

A. that in the hiring of employees for the performance of work under this contract or any subcontract hereunder, no contractor, or subcontractor, nor any person acting on behalf of such contractor or subcontractor shall, by reason of race, religion, color, sex, disability, national origin or ancestry, discriminate against any citizen of the State of Indiana who is qualified andavailable to perform the work to which the employment relates; and

B. that no contractor, subcontractor, nor any person on his behalf shall, in any manner, discriminate against or intimidate any employee hired for the performance of work under this contract on account of race, religion, color, sex, national origin or ancestry; and

C. that there may be deducted from the amount payable to the contractor by the State of Indiana or by any municipal corporation thereof, under this contract, a penalty of five dollars ($5.00) for each person for each calendar day during which such person was discriminated against or intimidated in violation of the provisions of the contract; and

D. that this contract may be canceled or terminated by the State of Indiana or by any municipal corporation thereof, and all money due or to become due hereunder may be forfeited, for a second or any subsequent violation of the terms or conditions of this section of the contract.

09 EMPLOYMENT ELIGIBILITY VERIFICATION

The Contractor affirms under the penalties of perjury that he/she/it does not knowingly employ an unauthorized alien.

The Contractor shall enroll in and verify the work eligibility status of all his/her/its newly hired employees through the E-Verify program as defined in IC 22-5-1.7-3. The Contractor is not required to participate should the E-Verify program cease to exist. Additionally, the Contractor is not required to participate if the Contractor is self-employed and does not employ any employees.

The Contractor shall not knowingly employ or contract with an unauthorized alien. The Contractor shall not retain an employee or contract with a person that the Contractor subsequently learns is an unauthorized alien.

The Contractor shall require his/her/its subcontractors, who perform work under this contract, to certify to the Contractor that the subcontractor does not knowingly employ or contract with an unauthorized alien and that the subcontractor has enrolled and is participating in the E-Verify program. The Contractor agrees to maintain this certification throughout the duration of the term of a contract with a subcontractor.

The State may terminate for default if the Contractor fails to cure a breach of this provision no later than thirty (30) days after being notified by the State.

The contractor shall submit, before work begins the E-Verify case verification number for each individual who is required to be verified under IC 22-5-1.7. An individual who is required to be verified under IC 22-5-1.7 whose final case result is final non-confirmation may not be employed on the public works project.

A contractor may not pay cash to any individual employed by the contractor for work done by the individual on the public works project.

A contractor must follow the federal Fair Labor Standards Act of 1938, as amended (29 U.S.C. 201-209) and IC 22-2-2. A contractor must be in compliance with IC 22-3-5-1 and IC 22-3-7-34. A contractor must be in compliance with IC 22-4-1 through IC 22-4-39.5. A contractor must be in compliance with IC 4-13-18.

10 NOTICE OF AWARD

A. Prior to execution of the Contract, in accordance with IC 4-13.6-5-2, the Director of Public Works may require additional submittals from Bidder/s to clarify contractor's experience and plans for performing the proposed work. Submittals which may be required include a critical path construction schedule which coordinates all significant tasks sequences and durations; schedule of values, and documentation of efforts to include minority, woman, and veteran owned businesses in the proposed work. The Director may require Bidder/s to provide a comprehensive list of subcontractors and suppliers within 24 hours of receipt of bids.

B. Prior to execution of the Contract, the successful Bidder shall furnish a completed Domestic Steel Affirmation (DAPW 11) to Public Works Division, Indiana Department of Administration as part of the contract. The Domestic Steel Affirmation is included for Bidder's review but need not be submitted at the time of the bid opening. Definition of Steel Products: "Steel products" means products rolled, formed, shaped, drawn, extruded, forged, cast, fabricated, or otherwise similarly processed, or processed by a combination of two (2) or more of such operations, from steel made in the United States by the open hearth, basic oxygen, electric furnace, Bessemer or other steel making process.

C. Prior to execution of the Contract, the successful Bidder shall furnish a completed Contractor's Bond for Construction (DAPW 15) (combined performance and payment bond) to Public Works Division, Department of Administration as part of the contract. The Bond form is included for Bidder's review but need not be submitted at the time of the bid opening.

D Prior to execution of the Contract, the successful Bidder shall furnish a completed Contractor's Certificate of Insurance (DAPW 16) to Public Works Division, Department of Administration as part of the contract. The Insurance form is included for Bidder's review but need not be submitted at the time of the bid opening.

E. Prior to execution of the Contract, the State of Indiana will issue to the successful Bidder an email letter stating that its bid was the lowest responsible and responsive bid and that the attached electronic format contract document is submitted to Contractor for its consideration. If Contractor finds it in accordance with the bid documents, Contractor will electronically sign the contract within ten (10) calendar days after receipt. Further state agency approvals are required, and Contractor is cautioned that a contract is not binding on the State until it is approved by all signatories required. Failure to execute the proper contract and furnish the ancillary documents shall constitute reason to surrender the bid bond.

F. Concurrent with execution of the Contract, the successful Bidder may be required to furnish executed copies of Contractor-Subcontractor agreements as required in Article 5 of the General Conditions.

11 SUMMARY

All required bid documents must contain original handwritten signatures. Complete documents to be submitted with this bid:

A. The Bid Bond (DAPW 15A) must be signed by both the Bidder and Bonding Company. The Bonding Company must also attach a Power of Attorney. Bid bond information, may be on the Bonding Company's standard form.

B. The Contractor's Bid (DAPW 13)

Page 1: State the amount of the bid in figures and words.

Page 2: State the amount of the alternate(s), indicate add, deduct or no change (READ CAREFULLY).

Page 3: Authorized signature of the Company. If the signature affidavit is completed and submitted with the bid, this page must be submitted but need not be signed or notarized.

C. The Signature Affidavit (DAPW 14) must contain the completed authorized signatures properly notarized and submitted with the bid as a supplement.

This Signature Affidavit shall fulfill all of the signature requirements. NOTE: The Signature Affidavit does not apply to the Bid Bond (DAPW 15A). The Bid Bond document must be fully completed with all required signatures and submitted with the bid.

D. The Non-Collusion Statement (DAPW 121) must be signed by the same authorized person(s) who signed the bid documents. If the signature affidavit is completed and submitted with bid, this form shall be submitted, but need not be signed.

E. For corporations, if anyone other than the president of the corporation signs, a Certificate of Corporate Resolution (DAPW 41) giving signature authority for the signer must be included.

F. MBE/WBE/IVOSB Participation Plan and MBE/WBE/IVOSB Good Faith Effort Worksheet (DAPW 26 SUP2) must be completed and signed by the same authorized person who signed the bid documents.

G. The completed Contractor's Affidavit of Subcontractors Employed (DAPW 12) whose subcontract amount will be $150,000.00 or more.

H. The completed plan for Contractor's Employee Drug Testing Plan (or statement of collective bargaining agreement).

I. One copy only of the Bid Documents is required. Bidders may remove and use the Documents included in the project specifications or use reproductions of the Documents.

12 INDIVIDUAL BIDS SHALL BE REJECTED BY THE DIRECTOR, PUBLIC WORKS DIVISION, FOR THE FOLLOWING REASONS (IC 4-13.6-5-2; IC 4-13.6-6-1; 25 IAC 2-6-5)

A. If the bid email subject line and bid form heading does not clearly identify the project number and description; if the name of the Bidder is not clearly indicated in the email and/or if the email is not received and date stamped within the Public Works Division electronic bid receipt mailbox prior to the stated time for receipt of bids.

B. If the estimated base bid cost exceeds $150,000.00 and the bidding contractor is not certified by Public Works Certification Board to offer bids in one of the specified categories.

C. If the bidding contractor is under suspension by the Director of Public Works or by the Public Works Certification Board.

D. If the bidding contractor is a trust and does not identify all beneficiaries and empowered settlors of the trust.

E. If the contractor's drug plan is not included in the bid documents pursuant to and complies with IC 4-13-18.

13 INDIVIDUAL BIDS MAY BE REJECTED BY THE DIRECTOR, PUBLIC WORKS DIVISION, FOR THE FOLLOWING REASONS (25 IAC 2-6-5)

A. If the Contractor's Bid (DAPW 13), Non-Collusion Statement (DAPW 121), and/or Bid Bond (DAPW 15A) are not signed and notarized as required by these instructions, or the Signature Affidavit (DAPW 14) and the Bid Bond (DAPW 15A) are not signed and notarized as allowed as an alternative.

B. If all required bid or alternate(s) amounts, or unit prices are not submitted with the bid when specifically called for by the specifications issued for the project.

C. When the Bidder adds any provision reserving the right to accept or reject the award, or if the Bidder adds conditions or alternates to his bid not requested (voluntary alternates), or if there are unauthorized additions or irregularities of any kind which tend to make the proposal incomplete, indefinite or ambiguous as to its meaning or amount.

D. When no bids received are under or within funds that can be appropriated, or within the Designer's estimate or when situations develop which make it impossible or not practical to proceed with the proposed work.

E. If, subsequent to the opening of the bids, facts exist which would disqualify the Bidder, or that such Bidder is not deemed by the Director, Public Works Division, to be responsive or responsible.

F. If an out-of-state contractor is not registered with the Indiana Secretary of State or if any bidding contractor is not in good standing with the Secretary of State.

AFFIDAVIT OF SUBS EMPLOYED

Public Works Project Number:_____Date:_____

Project Description: _____

Prime Contractor / Designer: _____

Form Submitted for Bid:_____Contract:_____or Payment No.:_____

The following companies are subcontractors on this project for the amount indicated:

Subcontractor Name	Subcontract For	Subcontract Amount	Revised Amount	DAPW Certified Y/N	MBE WBE IVOSB	On Site Y/N

_____being duly sworn upon oath, deposes and says that they are _____of the firm of_____and is familiar with the affidavit herewith and that these entries are complete and true.

STATE OF }
} SS:
COUNTY OF }

_____ personally appeared before me, a Notary Public, in and for said County and State, this___day of_____,20_, after being duly sworn upon his oath, says that the facts alleged in the foregoing affidavit are true.

_____
NOTARY PUBLIC - SIGNATURE

My Commission Expires: _____

_____
NOTARY PUBLIC PRINTED NAME

(SEAL)

GENERAL BID FOR PUBLIC WORKS - CONTRACTOR'S BID

State Form 34894 (03-25) / DAPW 13
Indiana Department of Administration – Public Works

INDIANA DEPARTMENT OF ADMINISTRATION
DIVISION OF PUBLIC WORKS
402 West Washington Street
Room W462
Indianapolis, IN 46204

INSTRUCTIONS FOR BIDDERS:

Fill in all blank spaces and submit to the address located in the agency block on the top of this form. Please see the notice to bidders for the project in question for project-related information

Project Number:		Project Description / Title:	
Class of Work Bid Submitting For:			
Contractor Email Address		Contractor Cell Phone #	
Sum of Bid *Please Enter Amount in Text Format*		Sum of Bid *Please Enter Amount in Number Format*	
Federal ID Number (EIN) or Last 4 of Social Security	*Employer Identification Numbers, or EINs, are provided by the Internal Revenue Service when registering your company. Please see https://www.irs.gov/businesses/small-businesses-self-employed/apply-for-an-employer-identification-number-ein-online for more information* *Please Do NOT include full Social Security Numbers*	Bidder ID Number	*Bidder Identification Numbers are provided by the Indiana Department of Administration. If you do not have a Bidder ID Number, you can obtain one at https://www.in.gov/idoa/procurement/supplier-resource-center/requirements-to-do-business-with-the-state/bidder-profile-registration/*

Pursuant to notices given, the undersigned proposes to furnish and install work in accordance with the construction documents prepared by the Designer detailed below:

Designer Name		Designer Phone #	
Designer Address			

Alternate Bids

Instructions:
Add Alternates Are Not to be included as part of the Base Bid Scope of Work.
Deduct Alternates are items of work that are to be included in the Base Bid Scope of Work and deducted from the project as described herein.
The work shall be as described in Section, ALTERNATES.
Bidder shall provide a response to each alternate specified. Response must indicate the amount to be ADDED to the base bid, DEDUCTED from the base bid, or that there is NO CHANGE.
Failure to respond to all alternates may cause the bid to be rejected.
BIDDER SHALL CHECK APPLICABLE BOX to the right for each listed alternate

Alternate Number		Add		Deduct		No Change		Dollar Amount	
Alternate Number		Add		Deduct		No Change		Dollar Amount	
Alternate Number		Add		Deduct		No Change		Dollar Amount	
Alternate Number		Add		Deduct		No Change		Dollar Amount	
Alternate Number		Add		Deduct		No Change		Dollar Amount	
Alternate Number		Add		Deduct		No Change		Dollar Amount	
Alternate Number		Add		Deduct		No Change		Dollar Amount	
Alternate Number		Add		Deduct		No Change		Dollar Amount	
Alternate Number		Add		Deduct		No Change		Dollar Amount	
Alternate Number		Add		Deduct		No Change		Dollar Amount	

Ethics Compliance.

The Contractor and its agents shall abide by all ethical requirements that apply to persons who have a business relationship with the State, as set forth in IC § 4-2-6, *et seq.*, IC §4-2-7, *et seq.* and the regulations promulgated thereunder. If the Contractor has knowledge, or would have acquired knowledge with a reasonable inquiry, that a state officer, employee, or special state appointee, as those terms are defined in IC §4-2-6-1, has a financial interest in the Contract, the Contractor shall ensure compliance with the disclosure requirements in IC §4-2-6-10.5 prior to the execution of this Contract. If the Contractor is not familiar with these ethical requirements, the Contractor should refer any questions to the Indiana State Ethics Commission or visit the Inspector General's website at http://www.in.gov/ig/. If the Contractor or its agents violate any applicable ethical standards, the State may, in its sole discretion, terminate this contract immediately upon notice to the Contractor. In addition, the Contractor may be subject to penalties under IC §§ 4-2-6, 4-2-7, 35-44.1-1-4, and under any other applicable laws.

Non-Discrimination Compliance

Pursuant to IC 22-9-1-10, the Contractor and subcontractors, if any, shall not discriminate against any employee or applicant for employment, to be employed in the performance of this contract, with respect to his hire, tenure, terms, conditions or privileges of employment, or any matter directly or indirectly related to employment, because of his race, religion, color, sex, disability, national origin, or ancestry. Breach of this covenant may be regarded as a material breach of the contract.

Addenda Recognition

BY SIGNING THIS BID THE BIDDER ACKNOWLEDGES PROCUREMENT OF ALL ADDENDA AND CERTIFIES THAT THIS BID RECOGNIZES ALL ITEMS IN ALL ADDENDA.

Sole Proprietor Signature

In testimony whereof, the Bidder (a sole proprietor has hereunto set his or her hand on the date marked below.

Proprietorship (*Company Name)*		Bidder (*Owner*) Name	
Date (*MM-DD-YYYY)*		Bidder (*Owner)* Signature	

Partnership Signatures

In testimony whereof, the Bidder (a partnership) has here unto set their hands on the date marked below.

Company Name		Date (MM-DD-YYYY)	
Partner Name		Partner Signature	
Partner Name		Partner Signature	

Corporate Signatures

In testimony whereof, the Bidder (a corporation) has caused this proposal to be signed by its President or other authorized signatory and Secretary on the date marked below.

If the bid is signed by other than the President, a Corporation Resolution designating other authorized signatory shall be submitted with this bid unless already on file with the Certification Board of the Public Works Division.

Corporation Name		Date (MM-DD-YYYY)	
President or Authorized Signatory Name		President or Authorized Signature	
Secretary Name		Secretary Signature	

SIGNATURE AFFIDAVIT

PROJECT NO:_____

STATE OF }
} SS:
COUNTY OF }

Before me, the undersigned notary public, appeared_____and being duly
(name of bidder)

sworn, on his oath says that he/she is_____
(president, general partner, owner)

of_____, bidder on Project No._____, and
(name of company)

Affirmed that:

1. This bid is submitted in good faith in the amount stated herein, and will be fulfilled according to the Contract Documents (contract, general and supplemental conditions, technical specification, drawings and addenda thereto), if this bid is accepted; and
2. The statements are true contained in the Non-Collusion Statement, and as applicable, the Contractor's Affidavit of Subs Employed and the MBE, WBE and IVOSB Participation Plan and Good Faith Efforts Worksheet.

By: _____
(Signature)

_____
(Printed name)

_____
(Printed or typed name of company)

(must be signed by principal of organization)

STATE OF }
} SS:
COUNTY OF }

_____ personally appeared before me, a Notary Public, in and for said County and State, this_____day of_____, 20_____, after being duly sworn upon his oath, says that the facts alleged in the foregoing affidavit are true.

My Commission Expires:

_____
NOTARY PUBLIC – SIGNATURE

_____

_____
NOTARY PUBLIC PRINTED NAME

(SEAL)

BID BOND

KNOW ALL MEN BY THESE PRESENTS, that we_____
(Contractor's Name and Address)

as Principal, hereinafter called the Principal, and the_____
(Bonding Company Name)

a corporation duly organized under the laws of the State of _____
as Surety, hereinafter called the Surety, are held and firmly bound unto Public Works Division/Department of Administration, State of Indiana, as Obligee, hereinafter called the Obligee,

in the sum of _____
for the payment of which sum well and truly to be made, the said Principal and the said Surety, bind ourselves, our heirs, executors, administrators, successors and assigns, jointly and severally, firmly by these presents.

WHEREAS, the Principal has submitted a bid for: (insert State Project Number, Description and Location)

Project No. _____

Project Description: _____

Project Location: _____

NOW THEREFORE, if the Obligee shall accept the bid of the Principal and the Principal shall enter into a contract with the Obligee in accordance with the terms of such bid, and give such bond or bonds as may be specified in the bidding or contract documents with good and sufficient surety for the faithful performance of such contract and for the prompt payment of labor and material furnished in the prosecution thereof, or in the event of the failure of the Principal to enter such contract and give such bond or bonds, if the Principal shall pay to the Obligee the difference not to exceed the penalty hereof between the amount specified in said bid and such larger amount for which the Obligee may in good faith contract with another party to perform the work covered by said bid, then this obligation shall be null and void, otherwise to remain in full force and effect.

Signed and sealed this_____day of_____,20____.

_____ (Witness)

_____ (Principal)

By: _____ (Title)

_____ (Surety)

_____ Witness)

_____ (Attorney-in-fact)

MINORITY, WOMEN'S AND INDIANA VETERAN OWNED BUSINESS ENTERPRISES PARTICIPATION PLAN FOR PUBLIC WORKS PROJECTS

CONTRACT GOALS 7% MBE 5% WBE 3% IVOSB

When a bidder submits a Minority, Women's and Indiana Veteran Owned Business Enterprises Participation Plan (Plan) in accordance with IC 4-13-16.5, 25 IAC 5, 25 IAC 9, and the IDOA DSD Public Works Construction Projects Policy, the bidder will be held to those commitments. The Plan must show that there are Minority Business Enterprises (MBE), Women's Business Enterprises (WBE), and Indiana Veteran Owned Small Business Enterprises (IVOSB), as listed in the Indiana Department of Administration's Division of Supplier Diversity's directory of certified firms, participating in the public works project. Bidders must indicate the name of the MBE, WBE and IVOSB subcontractor with which it will work, the contact name and phone number at the firm(s), the service(s) and/or supplies provided by the firm(s), the specific percentage of the bid that will be directed toward each firm, and the approximate dates for utilization these supplies and/or services. The Indiana Department of Administration reserves the right to verify all information included in the Plan.

All prime contractors, including MBE, WBE and IVOSB prime contractors, are expected to meet the contract goals through use of subcontractors. Per 25 IAC 9-4-1(c), "IVOSB primes shall receive credit toward the contract goal for the use of its own workforce." But, pursuant to 25 IAC 5-6-2(d), "MBE and WBE prime contractors will get no credit toward the contract goal for the use of their own workforce."

Bidders may contact the Division of Supplier Diversity ("DSD") if they have any questions regarding their Plan. A complete list of all currently certified MBEs, WBEs, and IVOSBs may be found using this link: http://www.in.gov/idoa/mwbe/2743.htm.

Minority, Women's and Indiana Veteran Owned Business Enterprises Participation Letter of Commitment

A signed letter(s), on company letterhead, from the MBE, WBE and/or IVOSB must accompany the Plan. This letter(s) shall state and will serve as acknowledgement from the MBE, WBE and/or IVOSB of its amount of participation, the scope of products and/or services, and approximate date these products and/or services will be utilized.

By submission of the proposal or bid, the bidder acknowledges and agrees to be bound by the regulatory processes involving the State's MBE, WBE and IVOSB Programs. Questions involving the regulations governing the Plan should be directed to DSD's Compliance Unit at 317/232-3061 or mwbecompliance@idoa.in.gov.

MBE/WBE and IVOSB PARTICIPATION PLAN

BID/PROJECT # _____ DUE DATE_____

BIDDER _____

ADDRESS _____

CITY/STATE/ZIP _____

EMAIL _____

PHONE ( ) _____

The following DSD Certified Businesses will be participating in the public works project:

COMPANY NAME	MBE WBE IVOSB	Contact Name & PHONE	SCOPE OF PRODUCTS/SERVICES	UTILIZATION DATE (S)	% OF TOTAL BID

*If additional room is necessary, indicate here____. Please attach a separate page.

THIS DOCUMENT MUST BE INCLUDED IN YOUR BID PACKAGE ALONG WITH THE COMPLETED LETTER(S) OF COMMITMENT.

If the levels of participation do not reach the goals of the project, Bidder should continue to the Good Faith Efforts Worksheet and Request for GFE Review.

Indiana Department of Administration, Public Works Division
PRIME BIDDER GOOD FAITH EFFORTS (GFE) WORKSHEET

BIDDER NAME _____ BID/PROJECT NUMBER _____

BUSINESS ADDRESS _____

EMAIL _____

PHONE NUMBER _____

CONTRACT GOALS 7% MBE 5% WBE 3% IVOSB

This worksheet is to be used to assist you in meeting the subcontracting participation goals. If your bid does not meet the goals or partially meets the goals, this form, along with the **Request for GFE Review**, shall be submitted with your BID PACKAGE.

Company Name and Address	MBE	WBE	IVOSB	Date of Contact	Date of Response	Goods or Services Requested	Result (Include Price Quote)

DESCRIBE FURTHER EFFORTS:

DSD Assistance	Describe
Advertisement	Describe
Agency Assistance	Describe
Other Criteria	Describe

***If additional room is necessary, indicate here _____. Please attach a separate page.**

REQUEST FOR GOOD FAITH EFFORTS (GFE) REVIEW

BIDDER NAME _____ BID/PROJECT NUMBER _____

BUSINESS ADDRESS _____

EMAIL _____

PHONE NUMBER _____

BIDDER IS REQUESTING (check all that apply)

☐ **MBE** – A review of Bidder's GFE toward the MBE goal for this solicitation is requested.

☐ **Total** ☐ **Partial _____ %**

☐ **WBE -** A review of Bidder's GFE toward the WBE goal for this solicitation is requested.

☐ **Total** ☐ **Partial _____ %**

☐ **IVOSB –** A review of Bidder's GFE toward the IVOSB goal for this solicitation is requested.

☐ **Total** ☐ **Partial _____ %**

Submission of this form constitutes the Bidder's acknowledgement and agreement to comply with the M/WBE and IVOSB requirements set forth in IC 4-13-16.5, 25 IAC 5, and 25 IAC 9.

I affirm, under penalties of perjury, the information contained in this form is true and accurate.

Signature: _____

Printed name & title: _____

FOR AUTHORIZED USE ONLY
Date received: _____
Reviewed by: _____
Date returned to bidder: _____
GOOD FAITH EFFORTS ☐ **Approved** ☐ **Not Approved**
COMMENTS: _____
_____

I. MINORITY, WOMEN'S AND INDIANA VETERAN OWNED BUSINESS ENTERPRISES PARTICIPATION PLAN

When a Respondent submits a Minority, Women's and Indiana Veteran Owned Business Enterprises Participation Plan in accordance with IC 4-13-16.5, 25 IAC 5 and 25 IAC 9, (the "Plan"), Respondent will be held to those commitments. The Plan must show that there are, participating in the proposed contract, Minority Business Enterprises (MBE), Women's Business Enterprises (WBE), and Indiana Veteran Owned Small Business Enterprises (IVOSB) listed in the Minority and Women's Business Enterprises Division (MWBED) directory and the IVOSB directory of certified firms. Respondents must indicate the name of the MBE, WBE and IVOSB with which it will work, the contact name and phone number at the firm(s), the service supplied by the firm(s), the specific dollar amount from this contract that will be directed toward each firm, and the approximate date these products and/or services will be utilized. If participation is met through use of vendors who supply products and/or services, the Respondent must also indicate the vendor's tax ID number as well as provide a description of products and/or services provided to the Respondent that are directly related to this proposal and the cost of direct supplies for this proposal. All prime contractors, including MBE, WBE and IVOSB prime contractors, are expected to meet the contract goals through use of subcontractors.

The Indiana Department of Administration ("IDOA") in its commitment to Minority, Women's and Indiana Veteran Owned Small Business participation in the state's procurement and contracting process, expects MBE, WBE and IVOSB participation in bids for public works projects with subcontracting opportunities. The Department reserves the right to verify all information included in the Plan.

Respondents may contact MWBED if they have any questions regarding their Participation Plan. A complete list of all currently certified MBE's and WBE's is located at this link: http://www.in.gov/idoa/mwbe/2743.htm. The complete list of certified IVOSBs can be found at this link http://www.in.gov/idoa/files/ivbe_certification_list.xls.

Minority, Women's and Indiana Veteran Owned Business Enterprises Participation Letter of Commitment

A signed letter(s), on company letterhead, from the MBE, WBE and/or IVOSB must accompany the Plan. This letter(s) shall state and will serve as acknowledgement from the MBE, WBE and/or IVOSB of its amount of participation, the scope of products and/or services, and approximate date these products and/or services will be utilized.

By submission of the Proposal, the Respondent acknowledges and agrees to be bound by the regulatory processes involving the State's MBE, WBE and IVOSB Programs. Questions involving the regulations governing the Plan should be directed to MWBED's Compliance Unit at 317/232-3061 or to IDOA at 317-233-1494.

MBE/WBE and IVOSB PARTICIPATION PLAN

RFP # / Bid # / Quote # _____ DUE DATE_____

(Circle One)

RFP / BID / QUOTE NAME _____

(Circle One)

RESPONDENT _____

ADDRESS _____

CITY/STATE/ZIP _____

PHONE ( ) _____

The following MBEs and/or WBEs listed in the MWBED directory will be participating in the contract:

MBE/WBE	PHONE	COMPANY NAME	SCOPE OF PRODUCTS/SERVICES	UTILIZATION DATE	AMOUNT

The following IVOSBs listed in the IVOSB directory will be participating in the contract:

IVOSB	PHONE	COMPANY NAME	SCOPE OF PRODUCTS/SERVICES	UTILIZATION DATE	AMOUNT

***If additional room is necessary, indicate here_____. Please attach a separate page.**

Indiana Department of Administration
Public Works and State Office Building Commission
GOOD FAITH EFFORTS WORKSHEET

BIDDER _____ BID/PROJECT NUMBER _____

CONTRACT GOALS **7% MBE** **5% WBE**

List the M/WBEs contacted and complete the following information for each. Copies of all communications to and from each vendor should be maintained.

Company Name and Address	MBE	WBE	Type of Contact	Date of Contact	Date Response Due	Goods Or Services Requested	Result (Include Price Quote)

Indicate **Good Faith Efforts** made to utilize MWBEs. Check and explain all that apply or should be considered. Please provide evidence of the efforts that you want to be considered. A complete description of each criteria may be found in the **Indiana Department of Administration Public Works and State Office Building Commission MWBE Participation Policy.**

MBE and WBE Barrier Assistance	Describe
Advertisement	Describe
Agency Assistance	Describe
Other Criteria	Describe

Corporate Resolution Form
Approved by Attorney General

CERTIFICATE OF CORPORATE RESOLUTION

I,_____, do hereby certify that I am the Secretary
Type Name
of_____, a corporation duly organized and existing under and by virtue of the Laws of the State of Indiana;

I further certify that a regular/special meeting of the members of the Board of Directors of said corporation, duly called held and convened in conformity with the Charter and By Laws of said corporation, on the __day of_____, 20__, a quorum being present and voting thereon, the following resolution was duly adopted, to-wit:

I further certify that the foregoing resolution is a full, true, and complete copy as the same appears on record in the Minute Record Book of said corporation of which I am the legal custodian; that the same has not been altered, amended or repealed and is now in full force and effect.

In Witness Whereof, I have hereunto set my hand for said corporation this_____day of_____ _____, 20_____.

By:_____
(Signature)

(must be signed by principal of organization)

STATE OF }
} SS:
COUNTY OF }

_____

_____personally appeared before me, a Notary Public, in and for said County and State, this_____day of_____, 20___, after being duly sworn upon his oath, says that the facts alleged in the foregoing affidavit are true.

My Commission Expires:

_____
NOTARY PUBLIC - SIGNATURE

_____

_____
NOTARY PUBLIC PRINTED NAME

(SEAL)

NON-COLLUSION STATEMENT

The undersigned attests, subject to the penalties for perjury, that the undersigned is the Contractor, or that the undersigned is the properly authorized representative, agent, member or officer of the Contractor. Further, to the undersigned's knowledge, neither the undersigned nor any other member, employee, representative, agent or officer of the Contractor, directly or indirectly, has entered into or been offered any sum of money or other consideration for the execution of this Contract other than that which appears upon the face hereof. **Furthermore, if the undersigned has knowledge that a state officer, employee, or special state appointee, as those terms are defined in IC 4-2-6-1, has a financial interest in the Contract, the Contractor attests to compliance with the disclosure requirements in IC 4-2-6-10.5.**

_____
Signature

_____
Printed Name

_____
Title

_____
Company

_____
Date

STATE OF INDIANA DRUG-FREE WORKPLACE CERTIFICATION

State Form 44260 (R2 / 12-22)

Pursuant to Executive Order No. 90-5, April 12, 1990, issued by Governor Evan Bayh, the Indiana Department of Administration requires the inclusion of this certification in all contracts with and grants from the State of Indiana in excess of $25,000. No award of a contract or grant shall be made, and no contract, purchase order or agreement, the total amount of which exceeds $25,000, shall be valid unless and until this certification has been fully executed by the Contractor or Grantee and attached to the contract or agreement as part of the contract documents. False certification or violation of the certification may result in sanctions including, but not limited to, suspension of contract payments, termination of the contract or agreement and/or debarment of contracting opportunities with the State for up to three (3) years.

The Contractor/Grantee certifies and agrees that it will provide a drug-free workplace by:

(a) Publishing and providing to all of its employees a statement notifying employees that the unlawful manufacture, distribution, dispensing, possession or use of a controlled substance is prohibited in the Contractor's workplace and specifying the actions that will be taken against employees for violations of such prohibition; and

(b) Establishing a drug-free awareness program to inform employees about (1) the dangers of drug abuse in the workplace; (2) the Contractor's policy of maintaining a drug-free workplace; (3) any available drug counseling, rehabilitation, and employee assistance programs; and (4) the penalties that may be imposed upon an employee for drug abuse violations occurring in the workplace;

(c) Notifying all employees in the statement required by subparagraph (a) above that as a condition of continued employment the employee will (1) abide by the terms of the statement; and (2) notify the employer of any criminal drug statute conviction for a violation occurring in the workplace no later than five (5) days after such conviction;

(d) Notifying in writing the contracting State Agency and the Indiana Department of Administration within ten (10) days after receiving notice from an employee under subdivision (c) (2) above, or otherwise receiving actual notice of such conviction;

(e) Within thirty (30) days after receiving notice under subdivision (c) (2) above of a conviction, imposing the following sanctions or remedial measures on any employee who is convicted of drug abuse violations occurring in the workplace: (1) take appropriate personnel action against the employee, up to and including termination; or (2) require such employee to satisfactorily participate in a drug abuse assistance or rehabilitation program approved for such purposes by a Federal, State or local health, law enforcement, or other appropriate agency; and

(f) Making a good faith effort to maintain a drug-free workplace through the implementation of subparagraphs (a) through (e) above.

THE UNDERSIGNED AFFIRMS, UNDER PENALTIES OF PERJURY, THAT HE OR SHE IS AUTHORIZED TO EXECUTE THIS CERTIFICATION ON BEHALF OF THE DESIGNATED ORGANIZATION.

THE UNDERSIGNED ALSO AGREES THAT BY TYPING THEIR NAME ONTO THIS FORM, THEY AGREE TO THE USE OF THEIR DIGITAL NAME AS A LEGAL SIGNATURE

Printed Name of Organization	Contract/Grant ID Number
Authorized Representative	Date
Title	

CONTRACTOR'S EMPLOYEE DRUG TESTING

IC 4-13-18 **Chapter 18. Drug Testing of Employees of Public Works Contractors**

4-13-18-1	Applicability
4-13-18-2	"Bid"
4-13-18-3	"Contractor"
4-13-18-4	"Public works contract"
4-13-18-5	Employee drug testing plan required in bid; collective bargaining agreements
4-13-18-6	Employee drug testing program requirements
4-13-18-7	Contract cancellation for noncompliance

IC 4-13-18-1 **Applicability**

Sec. 1. This chapter applies only to a public works contract awarded after June 30, 2006.

As added by P.L.160-2006, SEC.2.

IC 4-13-18-2 "**Bid**"

Sec. 2. As used in this chapter, "bid" includes a quotation.

As added by P.L.160-2006, SEC.2.

IC 4-13-18-3 **"Contractor"**

Sec. 3. (a) As used in this chapter, "contractor" refers to a person who:

(1) submits a bid to do work under a public works contract; or

(2) does any work under a public works contract.

(b) The term includes a subcontractor of a contractor.

As added by P.L.160-2006, SEC.2.

IC 4-13-18-4 **"Public works contract"**

Sec. 4. As used in this chapter, "public works contract" refers to:

(1) a public works contract covered by IC 4-13.6;

(2) a public works contract covered by IC 5-16 and entered into by a state agency; or

(3) a state highway contract covered by IC 8-23-9;

(4) a public works contract covered by IC 36-1-12;

when the estimated cost of the public works project is one hundred fifty thousand dollars ($150,000) or more.

As added by P.L.160-2006, SEC.2. Amended by P.L.72-2018, SEC.10.

IC 4-13-18-5 Employee drug testing plan required in bid; collective bargaining agreements

Sec. 5. (a) A solicitation for a public works contract must require each contractor that submits a bid for the work to submit with the bid a written plan for a program to test the contractor's employees for drugs.

(b) A public works contract may not be awarded to a contractor whose bid does not include a written plan for an employee drug testing program that complies with this chapter.

(c) A contractor that is subject to a collective bargaining agreement shall be treated as having an employee drug testing program that complies with this chapter if the collective bargaining agreement establishes an employee drug testing program that includes the following:

(1) The program provides for the random testing of the contractor's employees.
(2) The program contains a five (5) drug panel that tests for the substances identified in section 6(a)(3) of this chapter.
(3) The program imposes disciplinary measures on an employee who fails a drug test. The disciplinary measures must include at a minimum, all the following:
(A) The employee is subject to suspension or immediate termination.
(B) The employee is not eligible for reinstatement until the employee tests negative on a five (5) drug panel test certified by a medical review officer.
(C) The employee is subject to unscheduled sporadic testing for at least one (1) year after reinstatement.
(D) The employee successfully completes a rehabilitation program recommended by a substance abuse professional if the employee fails more than one (1) drug test.

A copy of the relevant part of the collective bargaining agreement constitutes a written plan under this section.

As added by P.L.160-2006, SEC.2.

IC 4-13-18-6 Employee drug testing program requirements

Sec. 6. (a) A contractor's employee drug testing program must satisfy all of the following:
(1) Each of the contractor's employees must be subject to a drug test at least one (1) time each year.
(2) Subject to subdivision (1), the contractor's employees must be tested randomly. At least two percent (2%) of the contractor's employees must be randomly selected each month for testing.
(3) The program must contain at least a five (5) drug panel that tests for the following:
(A) Amphetamines.
(B) Cocaine.
(C) Opiates (2000 ng/ml).
(D) PCP.
(E) THC.
(4) The program must impose progressive discipline on an employee who fails a drug test. The discipline must have at least the following progression: (A) After the first positive test, an employee must be:

(i) suspended from work for thirty (30) days;
(ii) directed to a program of treatment or rehabilitation; and
(iii) subject to unannounced drug testing for one (1) year, beginning the day the employee returns to work.

(B) After a second positive test, an employee must be:
(i) suspended from work for ninety (90) days;
(ii) directed to a program of treatment or rehabilitation; and
(iii) subject to unannounced drug testing for one (1) year, beginning the day the employee returns to work.

(C) After a third or subsequent positive test, an employee must be:
(i) suspended from work for one (1) year;
(ii) directed to a program of treatment or rehabilitation; and
(iii) subject to unannounced drug testing for one (1) year, beginning the day the employee returns to work.

The program may require dismissal of the employee after any positive drug test or other discipline more severe than is described in this subdivision.

(b) An employer complies with the requirement of subsection (a) to direct an employee to a program of treatment or rehabilitation if the employer does either of the following:

(1) Advises the employee of any program of treatment or rehabilitation covered by insurance provided by the employer.
(2) If the employer does not provide insurance that covers drug treatment or rehabilitation programs, the employer advises the employee of agencies known to the employer that provide drug treatment or rehabilitation programs.

As added by P.L.160-2006, SEC.2.

IC 4-13-18-7 Contract cancellation for noncompliance

Sec. 7. (a) The public works contract must provide for the following:

(1) That the contractor implement the employee drug testing program described in the contractor's plan.

(2) Cancellation of the contract by the agency awarding the contract if the contractor:

(A) fails to implement its employee drug testing program during the term of the contract;
(B) fails to provide information regarding implementation of the contractor's employee drug testing program at the request of the agency; or
(C) provides to the agency false information regarding the contractor's employee drug testing program.

(b) The provisions of the public works contract relating to cancellation of the contract by the agency awarding the contract apply to cancellation of the public works contract under this section.

As added by P.L.160-2006, SEC.2.

Domestic Steel Affirmation

State Form 12125, DAPW 11 (04-25)
Indiana Department of Administration – Public Works

Department of Administration
Public Works
402 West Washington Street, Room W462
Indianapolis, IN 46204
E-mail: publicworks@idoa.in.gov
Website: www.in.gov/idoa

Domestic Steel Affirmation

Project Number:

I hereby swear or affirm under the penalties of perjury that the steel products furnished for this project shall conform to the requirements of Indiana Code 5-16-8-1 and 5-16-8-2.

IC 5-16-8-1 Definitions

Sec. 1. (a) The definitions in this section apply throughout this chapter.
(b) "Foundry products" means products cast from ferrous and nonferrous metals by foundries in the United States.
(c) "Person" means a natural person, corporation, limited liability company, partnership, or other business unit or association.
(d) "Public agency" means:
(1) the state of Indiana;
(2) a department, agency, board, commission, or institution of the state of Indiana; or
(3) a county, city, township, school or conservancy district, or other governmental unit or district;
that receives public bids for construction or other public works under Indiana law.
(e) "Steel products" means products rolled, formed, shaped, drawn, extruded, forged, cast, fabricated, or otherwise similarly processed, or processed by a combination of two (2) or more of such operations, from steel made in the United States by the open hearth, basic oxygen, electric furnace, Bessemer, or other steel making process.
(f) "United States" refers to the United States of America. The term includes all territory, continental or insular, subject to the jurisdiction of the United States.

IC 5-16-8-2(a) Public agency contract provisions; rules for determining reasonable pricing.

Sec. 2. (a) Each public agency shall require that every contract for the construction, reconstruction, alteration, repair, improvement or maintenance of public works contain a provision that, if any steel or foundry products are to be used or supplied in the performance of the contract or subcontract, only steel or foundry products made in the United States shall be used or supplied in the performance of the contract or any of the subcontracts unless the head of the public agency determines, in writing, that the cost of steel or foundry products is considered to be unreasonable.

Signature of President:	Printed Name:	Date:
Printed Name of Company:		
Attesting Signature of Vice President / Secretary/ Treasurer:		Date:

CONTRACTOR'S BOND FOR CONSTRUCTION

KNOW ALL MEN BY THESE PRESENT, that _____
(Contractor)
_____of _____
(Address) (City, State)
as principal and_____
(Bonding Company)
_____
(Address) (City, State) (Zip Code)

as surety, are firmly bound unto the State of Indiana in the penal sum of $_____Dollars, for the payment of which, well and truly to be made, we bind ourselves, jointly and severally, and our joint and several heirs, executors, administrators and assigns, firmly by these present, this _____day of_____, 20_____.

THE CONDITIONS OF THE ABOVE OBLIGATION ARE SURE, THAT, WHEREAS the State of Indiana acting by and through the Commissioner, Department of Administration, has entered into a certain written contract dated_____of _____

_____
(Project Number and Description)

_____situated in _____
Indiana, in accordance with the construction documents approved and adopted by said Commissioner, Department of Administration, which are made a part of this bond.

NOW THEREFORE, if the said _____
(Contractor)
_____, shall well and faithfully do and perform the same in all respects according to the plans and specifications adopted by said Commissioner, Department of Administration, and according to the time, terms and conditions specified in said contract and incurred by him or any subcontractor in the prosecution of said work, including labor, service and materials furnished, then this obligation shall be void; otherwise to remain in full force, virtue and effect. This bond shall adhere to the requirements of IC 4-13.6-7-6 and IC 4-13.6-7-7.

IN WITNESS WHEREOF, we hereunto set our hands and seals this _____ day

of_____ , 20_____.

By:_____ (Seal)
(Contractor)

By:_____ (Seal)
(Bonding Company)

By:_____
(Attorney-in-fact)

CONTRACTOR'S CERTIFICATE OF INSURANCE

This certifies to the addressee shown below that the following described policies, subject to their terms, conditions, and exclusions, have been issued to:

NAME AND ADDRESS OF INSURED: _____

COVERING (show State project number, name and location) _____

ADDRESSEE: **PUBLIC WORKS DIVISION/DEPARTMENT OF ADMINISTRATION** DATE: _____

TYPE OF INSURANCE	POLICY NUMBER	EFFECTIVE DATE	EXPIRATION DATE	LIMITS	
1. General Liability a. Bodily Injury Including Personal Injury				Each Person - Premises and Operations Each Person - Elevators Each Person - Independent Contractor Each Person - Products Completed Including Operations Each Person - Contractual Each Occurrence - Aggregate - Products Completed Including Operations	$ _____ $ _____ $ _____ $ _____ $ _____ $ _____ $ _____
b. Property Damage				Each Occurrence - Premises and Operations Each Occurrence - Elevators Each Occurrence - Independent Contractor Each Occurrence - Products Completed Including Operations Each Occurrence - Contractual Aggregate - Aggregate - Operations Protective Products and Contractual	$ _____ $ _____ $ _____ $ _____ $ _____ $ _____ $ _____
2. Automobile Liability a. Bodily Injury b. Property Damage				Each Person Each Occurrence Each Accident	$ _____ $ _____ $ _____
3. Excess Liability Umbrella					$ _____
4. a. Workmen s Compensation b. Employer s Liability				Statutory Workmen s Compensation One Accident And Aggregate Disease	$ _____ $ _____
5. Builder s Risk					$ _____

UNDER GENERAL LIABILITY POLICY OR POLICIES	YES	NO
1. Does Property Damage Liability Insurance shown include coverage for **XC** and **U** hazards?	_____	_____
2. Is Occurrence Basis Coverage provided under Property Damage Liability?..	_____	_____
3, Is Broad Form Property Damage Coverage provided for this Project?.....	_____	_____
4. Is Personal Injury Coverage included?.....	_____	_____
5. Is coverage provided for Contractual Liability (including indemnification provision) assumed by insured?	_____	_____
UNDER AUTOMOBILE LIABILITY POLICY OR POLICIES	_____	_____
1. Does coverage shown above apply to non-owned and hired automobiles?....	_____	_____
2. Is Occurrence Basis Coverage provided under Property Damage Liability?..	_____	_____

In the event of cancellation, fifteen (15) days written notice shall be given to the party to whom this certificate is addressed.

_____
NAME OF INSURANCE COMPANY

_____
ADDRESS

_____
SIGNATURE OF AUTHORIZED REPRESENTATIVE

INDIANA DEPARTMENT OF ADMINISTRATION

PUBLIC WORKS DIVISION

GENERAL CONDITIONS

Indiana Department of Administration
Public Works Division
402 W. Washington Street, W462
Indianapolis, Indiana 46204

DAPW 26
Rev. 02/23

TABLE OF CONTENTS

1. CONTRACT DOCUMENTS
   - 1.1 Definitions
   - 1.2 Intent and Interpretations
   - 1.3 Copies
2. DESIGNER
   - 2.1 Definition
   - 2.2 Administration of the Contract
3. OWNER
   - 3.1 Definition
   - 3.2 Information and Service
   - 3.3 Owners Site Representative
4. CONTRACTOR
   - 4.1 Definition
   - 4.2 Review of Documents
   - 4.3 Supervision and Procedures
   - 4.4 Labor and Materials
   - 4.5 Warrantee and Guarantee
   - 4.6 Permits, Fees and Notices
   - 4.7 Cash Allowances
   - 4.8 Superintendent
   - 4.9 Contractor's Responsibility
   - 4.10 Progress and Schedule
   - 4.11 Record Documents at the Site
   - 4.12 Shop Drawings and Samples
   - 4.13 Use of Premises
   - 4.14 Cutting and Patching
   - 4.15 Cleaning Up
5. SUBCONTRACTORS
   - 5.1 Definition
   - 5.2 Award of Subcontracts
   - 5.3 Subcontractor Relations
6. SEPARATE CONTRACTS
   - 6.1 Owner's Right to Award Separate Contracts
   - 6.2 Mutual Responsibility of Contractors
7. MISCELLANEOUS PROVISIONS
   - 7.1 Delinquent Taxes
   - 7.2 Choice of Law
   - 7.3 Assignment
   - 7.4 Written Notice
   - 7.5 Claims for Damages
   - 7.6 Performance and Payment Bond
   - 7.7 Owners Right to Carry out the Work
   - 7.8 Royalties and Patents
   - 7.9 Tests & Substitution of Materials
   - 7.10 Certificate of Qualification
   - 7.11 Appropriation
   - 7.12 Wage Determination
   - 7.13 Out-of-State Contractors
   - 7.14 Material Delivery
   - 7.15 Weather
   - 7.16 Fire Hazards
   - 7.17 Dismissal
8. TIME
   - 8.1 Definitions
   - 8.2 Progress and Completion
   - 8.3 Delays and Extensions of Time
9. PAYMENTS AND COMPLETION
   - 9.1 Contract Sum
   - 9.2 Schedule of Values
   - 9.3 Progress Payments
   - 9.4 Certificates for Payment
   - 9.5 Payments Withheld
   - 9.6 Failure of Payment
   - 9.7 Substantial Completion and Final Payment
10. PROTECTION OF PERSON AND PROPERTY
    - 10.1 Safety Precautions and Programs
    - 10.2 Safety of Persons and Property
    - 10.3 Emergencies
11. INSURANCE
    - 11.1 General Requirements for Insurance
    - 11.2 Property Insurance
    - 11.3 Liability Insurance
12. CHANGES IN THE WORK
    - 12.1 Change Orders
    - 12.2 Claims for Additional Cost or Time
    - 12.3 Minor Changes
    - 12.4 Field Orders
13. EXAMINATION AND CORRECTION OF WORK
    - 13.1 Examination of Work
    - 13.2 Correction Before Substantial Completion
    - 13.3 Correction After Substantial Completion
14. TERMINATION OF THE CONTRACT
    - 14.1 Termination by the Contractor
    - 14.2 Termination by Owner

STATE OF INDIANA

GENERAL CONDITIONS

ARTICLE 1 CONTRACT DOCUMENTS

1.1 Definitions

1.1.1 Contract Documents

The Contract Documents consist of the Contract, the Instructions to Bidders, the Contractor's Proposal (Bid), the Conditions of the Contract (General and Supplementary), Drawings, Specifications, and Addenda issued prior to bidding, Change Orders, any written interpretation issued as a field order by the Designer pursuant to Article 1.2, and all field orders for minor changes in the Work by the Designer pursuant to Article 12.3.

1.1.2 Contract

The Contract Documents form the Contract for construction. The Contract represents the entire and integrated agreement between the parties hereto and supersedes all prior negotiations, representations, or agreements, either written or oral.

1.1.3 Work

All labor, material, equipment, systems and services necessary to produce the result called for in the Contract Documents.

1.1.4 Project

The Project is the total construction project designed by the Designer of which the Work performed under the Contract Documents may be the whole or a part of the whole Project.

1.2 Execution, Correlation, Intent and Interpretations

1.2.1 The Contract Documents shall be signed by the Owner and the Contractor. The signature process may be done electronically at the discretion of the Owner.

1.2.2 By executing the Contract, the Contractor represents that Contractor has visited the site and correlated its observations with the requirements of the Contract Documents and has no major question pertaining thereto.

1.2.3 The Contract Documents are complementary, and what is called for by any one shall be as binding as if called for by all. The intention of the Contract Documents is to include all labor, equipment, supervision and materials, for the proper execution and completion of the Work, and also to include those things that may be reasonably inferable from the Contract Documents as being necessary to produce the intended results. Words that have a well-known technical or trade meaning are used herein, in accordance with such recognized meaning.

1.2.4 Written interpretations necessary for the proper execution of the Work, in the form of drawings or otherwise will be issued with reasonable promptness by the Designer. Such interpretations shall be consistent with and reasonably inferable from the Contract Documents, and may be issued by field order subject to Owner's approval.

1.3 Copies Furnished and Ownership

1.3.1 The Contractor will be furnished 5 copies of drawings and specifications and any other information necessary for the execution of the Work.

1.3.2 All drawings, specifications, and copies thereof furnished by the Designer are the Designer's property. They are not to be used on any other Project, and, with the exception of one Contract set for each party to the Contract, are to be returned on request to the Designer at the completion of the Work.

ARTICLE 2 DESIGNER

2.1 Definition

2.1.1. The Designer is the person or organization identified as Designer of the Project and is referred to throughout the Contract Documents as if singular in number and, in some places, masculine in gender. The terms Designer, Engineer, Architect, (and in certain projects Director, Public Works Division, or his/her authorized representative), shall mean the Designer.

2.2 Administration of the Contract

2.2.1 The Designer will provide general administration of the Contract, including the functions hereinafter described.

2.2.2 Unless stated otherwise, the Designer shall be the Owner's representative during the construction phase. Designer shall have authority to act on behalf of the Owner only to the extent expressly provided in the Contract Documents or otherwise in writing, which will be shown to the Contractor. The Designer will advise and consult with the Owner and all of the Owner's instructions to the Contractor shall be issued through the Designer.

2.2.3 The Designer shall have access to the Work at all times wherever it is in storage, preparation and progress. The Contractor shall provide facilities for such access so that the Designer and Owner's Site Representative may perform their functions under the Contract Documents.

2.2.4 The Designer will make no less than weekly visits to the site when work is in progress to familiarize itself generally with the progress and quality of the Work and to determine in general if the Work is proceeding in accordance with the Contract Documents. Designer will not be required to make exhaustive or continuous on-site inspection to check the quality or quantity of the Work. On the basis of Designer's on-site observations, Designer will keep the Owner informed of the progress of the Work and will endeavor to guard the Owner against defects and deficiencies in the Work of the Contractor.

2.2.5 Based on such observation and the Contractor's applications for payment, the Designer will determine the amount owed to the Contractor and will issue Certificates for Payment in such amounts.

2.2.6 The Designer will be, in the first instance, the interpreter of the requirements of the Contract Documents and the judge of the performance thereunder. Designer will promptly render such interpretations as Designer may deem necessary for the proper execution or progress of the Work.

2.2.7 All interpretations and decisions of the Designer will be consistent with the intent of the Contract Documents. Designer will exercise its best efforts to insure faithful performance by the Contractor.

2.2.8 Claims, disputes and other matters in question relating to the execution or progress of the Work or interpretation of the Contract Documents shall be referred initially to the Designer for decision and be subject to written appeal within fifteen (15) days by the Contractor. The Designer's decision shall be submitted promptly in writing to the Director, Public Works Division, who shall have full authority to render the final and binding decision.

2.2.9 The Designer will have responsibility to recommend to the Owner the rejection of work that does not conform to the Contract Documents. Whenever the Designer considers it necessary or advisable, Designer shall recommend to the Owner the stoppage of the Work or any portion thereof, and to recommend special examination or testing of the Work (whether or not fabricated, installed, or completed).

2.2.10 The Designer will review and approve or take other appropriate action upon the Contractor's submittals such as shop drawings, product data and samples, but only for conformance with the design concept of the Work and with the information given in the Contract Documents. Such action shall be taken with reasonable promptness so as to cause no delay. The Designer's approval of a specific item shall not indicate approval of all assembly of which the item is a component.

2.2.11 The Designer will prepare change orders in accordance with Article 12.

2.2.12 The Designer will conduct reviews to determine the dates of Substantial Completion and Final Completion, will receive and forward to the Owner for the Owner's review written warranties and related documents required by the Contract and assembled by the Contractor, and will issue a final Certificate for Payment upon compliance with the requirements of Article 9.7.

2.2.13 The Designer, together with representatives from the Contractor and the Owner will conduct a review of the Work nine (9) months after the date of substantial completion to determine any work not in compliance with the Contract Documents at that time. A list of items to be corrected or completed will be forwarded to the Contractor for corrective action prior to the expiration of the one year warranty period.

2.2.14 The duties, responsibilities and limitations of authority of the Designer as the Owner's representative during construction as set forth in Articles 1 through 14 of these General Conditions shall not be modified or extended without written consent of the Owner.

2.2.15 The Designer will not be responsible for the acts or omissions of the Contractor, Subcontractor, or any of their superintendents, supervisory staffs, agents or employees, or any other persons performing any of the Work.

2.2.16 In case of the termination of the employment of the Designer, the Owner shall appoint a Designer against whom the Contractor makes no reasonable objections, whose status under the Contract shall be that of Designer.

ARTICLE 3 OWNER

3.1 Definition

3.1.1 The Owner is the State of Indiana, represented by the Commissioner, Department of Administration, acting through the Director, Public Works Division, and the Director's designated project manager.

3.2 Information and Service Required of the Owner

3.2.1 The Owner will furnish, through the Designer, surveys, describing known physical characteristics, legal limits and utility locations for the property on which the Project is to be erected, if in the Owner's possession.

3.2.2. Information or services under the Owner's control shall be furnished by the Owner with promptness to avoid delay in the orderly progress of the Work.

3.2.3 The Owner shall issue all instructions to the Contractor through the Designer unless specified elsewhere in these documents.

3.2.4 If the Contractor fails to correct defective work as required by Article 13 or persistently fails to carry out the Work in accordance with the Contract Documents, the Owner, by a written order may order the Contractor to stop the Work, or any portion thereof, until the cause for such order has been eliminated; however, this right of the Owner to stop the Work shall not give rise to any duty on the part of the Owner to exercise this right for the benefit of the Contractor or any other person or entity, except to the extent required by Article 6.1.

3.3 Owner's Site Representative

3.3.1 Notwithstanding the obligations of the Designer as Owner's representative during construction, the Owner may employ an on-site representative to observe the progress of the Work.

3.3.2 The Owner's Site Representative shall function as an observer only. Owner's Site Representative shall report his/her findings to the Designer for review and any required further action. The Owner's Site Representative is not authorized to make changes in the Work or to interpret the Contract Documents.

3.3.3 The Owner's Site Representative shall have at all times access to the Work wherever it is in storage, preparation and progress. Owner's Site Representative may attend meetings at the site and he/she may review and approve the Contractor payment requests.

ARTICLE 4 CONTRACTOR

4.1 Definition

4.1.1 The Contractor is the person or organization identified as such in the Contract. The Contractor is referred to throughout the Contract Documents as if singular in number and, in some places, masculine in gender. The term Contractor means the Contractor or its authorized representative.

4.2 Review of Contract Documents

4.2.1 The Contractor shall carefully study and compare the Contract Documents and shall at once report to the Designer and the Owner any error, inconsistency or omission Contractor may discover. The Contractor shall perform no portion of the Work at any time without Contract Documents or, where required, approved shop drawings, product data or samples for such portion of the Work.

4.3 Supervision and Construction Procedures

4.3.1 The Contractor shall supervise and direct the Work, using its best skill and attention. Contractor shall be solely responsible for the quality of the Work and for all construction techniques, sequences, and procedures, and for coordinating all portions of the Work.

4.3.2 The Contractor shall not be relieved from its obligations to perform the Work in accordance with the Contract Documents either by the activities or duties of the Designer in administration of the Contract, or by inspections, tests or approvals required or performed under Paragraph 7.9 by persons other than the Contractor.

4.4 Labor and Materials

4.4.1 Unless otherwise specified in Division 1, the Contractor shall provide and pay for all labor, material, equipment, tools, construction equipment, machinery, transportation, and other facilities and services necessary for the proper execution of the Work.

4.4.2 Unless otherwise specified in Division 1, the Contractor shall provide and pay for all electric current, water, heat, and

telephone services and shall maintain necessary discipline to prevent waste.

4.4.3 If any item of work shall be the subject of a jurisdictional dispute as to the craft to be used for said work, the Contractor shall aid in such inter-craft resolution and if arbitrated, abide by the decision, holding the Owner free of involvement in the dispute, and if time is lost by the dispute, extra work days will only be considered through the provisions of Article 12.2. Contractor will endeavor to eliminate any embarrassment to the Owner caused by the dispute.

4.4.4. The Contractor shall at all times enforce strict discipline and good order among its employees and shall not employ on the Work any unfit person or any one employee unskilled in the Work assigned or unqualified as a tradesman in the trade involved.

4.5 Warranty and Guarantee

4.5.1 The Contractor warrants and guarantees that all materials and equipment incorporated in the Project shall be new unless otherwise specified, and all work will be of the highest quality, free from faults and defects, and in strict conformance with the Contract Documents for a period of one year from the date of substantial completion. All work not so conforming to the Contract Documents may be considered defective. If required by the Designer, the Contractor shall furnish satisfactory evidence as to the kind and quality of materials and equipment. The warranties and guarantees provided in this Article and elsewhere in the Contract Documents shall be in addition to and not in limitation of any other warranty or guarantee or remedy called for the Contract Documents or otherwise prescribed by law. The Contractor, together with the Designer and representatives from the Owner, shall review the Work nine (9) months after the date of substantial completion to determine any work not in compliance with the Contract Documents. The Contractor shall correct such non-complying work prior to the expiration of the one year warranty.

4.6 Permits, Fees and Notices

4.6.1 The Contractor shall secure and pay for all permits, fees and licenses necessary for the execution of the Work.

4.6.2 The Contractor and Subcontractors must submit an “Exemption Certificate for Construction Contractors” (Form ST-105) to each supplier in order to obtain exemption from the Indiana Gross Tax (i.e., sales and use tax).

4.6.3 The Contractor shall give all notices and comply with all laws, ordinances, rules, regulations, and orders of any public authority bearing on the conduct of the Work. If Contractor observes that any of the Contract Documents are at variance therewith in any respect, Contractor shall promptly notify the Designer in writing, and any necessary changes shall be adjusted by change order. If Contractor performs any work knowing it to be contrary to such laws, ordinances, rules and regulations, and without such notice to the Designer, Contractor shall bear all cost arising from such non-conformance.

4.7 Cash Allowances

4.7.1 The Contractor shall include in the Contract Sum all allowances stated in the Contract Documents. These allowances cover the net cost of the materials and equipment delivered and unloaded at the site which cost shall be determined by the Owner through proper procedures for receiving quotes or bids as required by law. The Contractor’s handling costs on the site, labor, installation costs, overhead, profit**,** and other expenses shall be included in the Contract sum and not in the allowance. The Contractor shall cause the Work required by these allowances to be performed by such persons as the Designer may direct, but Contractor will not be required to employ persons against whom Contractor has a reasonable objection. If the net cost above, when determined, is more than or less than the allowance, the Contract Sum will be adjusted accordingly by change order.

4.8 Superintendent

4.8.1 The Contractor shall keep on the Project, during the entire contract time, a competent superintendent and necessary assistants, all satisfactory to the Designer, and the superintendent shall not be changed, except with the consent of the Owner, unless the superintendent proves to be unsatisfactory to the Contractor and ceases to be in Contractor’s employ. The superintendent shall represent the Contractor and shall have full authority to act on its behalf. All communications given the superintendent shall be as binding as if given by the Contractor. Important communications shall be confirmed in writing.

4.9 Responsibility for Those Performing the Work

4.9.1 The Contractor shall be responsible for the quality of the Work, for acts and omissions of all the Subcontractors, their superintendents, their supervisory staffs, agents, or employees and of all other persons performing any of the Work under a Contract with the Contractor.

4.10 Progress Schedule

4.10.1 Unless otherwise indicated in Division 1, the Contractor, immediately after being awarded the Contract, shall prepare and submit for the Designer's approval a progress schedule for the Work in relation to the entire Project. This schedule in bar graph form, or other form approved by the Owner, shall indicate the dates for the starting and completion of the various stages of construction, and in addition, will state the contractual completion date. The contract completion date, based on the construction period stated in the notice to bidders, shall not be changed by submission of a schedule that shows an early completion date, unless specifically authorized by change order. A more detailed schedule may be required elsewhere in the documents.

4.11 Record Documents at the Site

4.11.1 The Contractor shall maintain for the Owner as part of the Contract one record copy of all drawings, specifications, addenda, shop drawings, change orders and other modifications at the site in good order, and marked to record all changes made during construction. These shall be available to the Designer and the Owner's Site Representative at all times while Work is in progress. All changes made during construction shall be recorded monthly and reviewed by the Designer before approval of each partial progress payment. The record documents shall be submitted to the Designer prior to the Contractor's final payment.

4.12 Shop Drawings and Samples

4.12.1 Shop drawings are all drawings, diagrams, illustrations, schedules, brochures, and other data, which are prepared by the Contractor, or any Subcontractor, manufacturer, supplier, or distributor, and which illustrate the Work.

4.12.2 The Contractor shall submit all shop drawings and samples required by the Contract or by the Designer in a timely manner, allowing sufficient time for the Designer's review so as not to cause any delay in the Work or in work by any other Contractor.

4.12.3 At the time of such submission, the Contractor shall furnish or verify all field measurements, field construction criteria, materials, catalog numbers, and the like and shall individually check, coordinate and stamp with its approval each submission, and shall in writing call the Designer's attention to any deviations in the shop drawings or samples from the requirements of the Contract Documents.

4.12.4 The Designer will check and approve, with reasonable promptness so as to cause no delay, these shop drawings and samples only for conformance with the design concept of the Project, and with the information given in the Contract Documents. The Designer's approval of a separate item will not indicate approval of the assembly in which the item functions.

4.12.5 The Designer's approval of shop drawings or samples shall not relieve the Contractor of responsibility for any deviation from the requirements of the Contract Documents unless the Contractor has in writing called the Designer's attention to such deviation at the time of submission and the Designer has given written approval to the specific deviation, nor shall this relieve the Contractor from errors or omissions in the shop drawings or samples.

4.12.6 No work requiring a shop drawing or sample submission shall be commenced until the submission has been approved by the Designer. All such work shall be in accordance with approved shop drawings and samples.

4.13 Use of Premises

4.13.1 The Contractor shall confine operations at the site to areas permitted by law, ordinances, permits and the Contract Documents, and shall not unreasonably encumber the premises with any materials or equipment.

4.14 Cutting and Patching

4.14.1 The Contractor shall do all cutting, fitting or patching of its work that may be required to make its several parts come together properly and shall not endanger any work by cutting, excavating, or otherwise altering the Work or any part of it. Costs caused by defective or ill-timed work shall be borne by the party responsible therefore.

4.15 Cleaning Up

4.15.1 The Contractor shall at all times keep the premises free from accumulation of waste materials or rubbish caused by its operations. At the completion of the Work, Contractor shall remove all waste material and rubbish from and about the building as well as all its tools, scaffolding and surplus materials. Contractor shall clean all glass surfaces, lights and fixtures, ceilings, walls and shall leave the Work dusted, swept and wet mopped clean, unless more exactly specified.

4.15.2 In case of dispute the Owner may remove the rubbish and charge the cost to the several Contractors as the Designer shall determine to be just.

ARTICLE 5 SUBCONTRACTORS

5.1 Definition

As used in this article "contractor tier" refers collectively to the following classes of contractors on a public works project:

(1) "Tier 1 contractor" includes each person that has a contract with the public agency to perform some part of the work on, supply some of the materials for, or supply a service for, a public works project. A person included in this tier is also known as a "prime contractor" or a "general contractor".

(2) "Tier 2 contractor" includes each person that has a contract with a tier 1 contractor to perform some part of the work on, supply some of the materials for, or supply a service for, a public works project. A person included in this tier is also known as a "subcontractor".

(3) "Tier 3 contractor" includes each person that has a contract with a tier 2 contractor to perform some part of the work on, supply some of the materials for, or supply a service for, a public works project. A person included in this tier is also known asa "sub-subcontractor".

(4) "Lower tier contractor" includes each person that has a contract with a tier 3 contractor or lower tier contractor to perform some part of the work on, supply some of the materials for, or supply a service for, a public works project. A person included in this tier is also known as a "lower tier subcontractor".

A Subcontractor is a person or entity who has a direct Contract with the Contractor to perform any of the Work at the site. The term Subcontractor is referred to throughout the Contract Documents as if singular in number and, in some places, masculine in gender and means a Subcontractor or its authorized representative. The term Subcontractor does not include any separate Contractor or its Subcontractors.

5.2 Award of Subcontracts and Other Contracts for Portions of the Work

5.2.1 Unless otherwise required by the Contract, the Contractor shall furnish to the Owner, with its bid on the prescribed form, the names of all persons or entities (including those who are to furnish materials or equipment fabricated to a special design) proposed for each of the principal portions of the Work with an installed value of $150,000.00 or more. The Designer will promptly reply to the Contractor in writing stating whether or not the Owner or the Designer, after due investigation, has reasonable objection to any such proposed person or entity. Failure of the Owner or Designer to reply within fourteen (14) days shall constitute notice of no reasonable objection.

5.2.2 The Contractor shall not subcontract with any such proposed person or entity to which the Owner or the Designer has made reasonable objection. The Contractor shall not be required to subcontract with anyone to whom Contractor has a reasonable objection.

5.2.3 If the Owner or the Designer has reasonable objection to any such proposed person or entity, the Contractor shall submit a substitute to whom the Owner or the Designer has no reasonable objection.

5.2.4 The Contractor shall make no substitution of any Subcontractor, person or entity previously selected, if the Owner or Designer makes reasonable objection to such substitution.

5.2.5 The Contractor and its subcontractors shall employ only licensed plumbers and shall provide to the Owner the names and license numbers of all plumbers engaged in the Work. The Contractor shall submit this documentation with any monthly progress payment request that includes plumbing labor.

5.3 Sub Contractual Relations

5.3.1 By an appropriate written agreement, the Contractor shall require each Subcontractor, to the extent of the Work to be performed by the Subcontractor, to be bound to the Contractor by the terms of the Contract Documents, and to assume toward the Contractor all the obligations and responsibilities which the Contractor, by these Documents, assumes toward the Owner. Said agreement shall preserve and protect the rights of the Owner under the Contract Documents with respect to the Work to be performed by the Subcontractor so that subcontracting thereof will not prejudice such rights, and shall allow to the Subcontractor the benefit of all rights, remedies and redress against the Contractor that the Contractor, by these Documents, has against the Owner. Provisions of Article 9 for progress payments, retainage and payment for stored material shall be incorporated without modification in all Contractor-Subcontractor agreements. The Contractor shall require each Subcontractor to enter into similar agreements with Subcontractor's Sub-subcontractors. Prior to execution of the Contractor-Subcontractor agreement, the Contractor shall provide all Subcontractors a complete copy of all proposed Contract Documents for the Project to which the Subcontractor will be bound by this Paragraph 5.3. Each Subcontractor shall similarly make available to its Sub-Subcontractors copies of such Documents. Executed copies of all

agreements shall remain on file with the Contractor and be available for review by the Owner at the Owner's discretion.

ARTICLE 6 SEPARATE CONTRACTS

6.1 Owner's Right to Let Separate Contracts

6.1.1 The Owner reserves the right to let other contracts in connection with other portions of the Project under these or similar General Conditions.

6.1.2 When separate contracts are awarded for different portions of the Project, the "Contractor" in the Contract Documents in each case shall be the Contractor who signs each separate contract with the Owner.

6.1.3 When separate contracts are awarded for portions of the Project, the General Construction Contractor shall be responsible for the overall coordination of all separate contracts for the Project.

6.2 Mutual Responsibility of Contractors

6.2.1 The Contractor shall afford each other Contractor reasonable opportunity for the introduction and storage of their materials and equipment and the execution of their work, and each shall properly connect and coordinate its work with all others as coordinated by the General Contractor.

6.2.2 If any part of the Contractor's work depends on proper execution or results upon the work of any other separate Contractor, the Contractor shall inspect and promptly report to the Designer any discrepancies or defects that shall cause its work to fail or be non-conforming. Failure of the Contractor to so inspect and report shall constitute an acceptance of the other Contractor's work as fit and proper for the reception of its work.

6.2.3 Should the Contractor cause damage to any separate Contractor on the Project, the General Contractor agrees, upon due notice, to settle with such other Contractor by agreement, if at all possible, without involving the Owner. The Owner will be involved only after evidence is presented that sureties cannot settle the problem.

6.2.4 Any costs caused by defective or ill-timed work shall be borne by the party responsible.

ARTICLE 7 MISCELLANEOUS PROVISIONS

7.1 Delinquent State Taxes (IC. 4-13-2-14.5). The Public Works Division may allow the Department of State Revenue access to the name of each person who is either:

(1) Bidding on a Contract to be awarded under this chapter; or
(2) A Contractor or Subcontractor under this chapter.

If the Public Works Division is notified by the Department of State Revenue that a bidder is on the most recent tax warrant list, a Contract may not be awarded to that bidder until the bidder provides a statement from the Department of State Revenue that the Bidder's delinquent tax liability has been satisfied. The Department of State Revenue may notify:

(1) The Department of Administration; and
(2) The Auditor of State;

that a Contractor or Subcontractor under this chapter is on the most recent tax warrant list, including the amount owed in delinquent taxes. The Auditor of State shall deduct from the Contractor's or Subcontractor's payment the amount owed in delinquent taxes. The Auditor of State shall remit this amount to the Department of State Revenue and pay the remaining balance to the Contractor or Subcontractor.

7.2 Choice of Law

7.2.1 The Contract shall be governed by the laws of the State of Indiana.

7.3 Assignment

7.3.1 The Contractor shall not assign the Contract or sublet it as a whole without the written consent of the Owner, nor shall the Contractor assign any monies due or to become due to it hereunder, without the previous written consent of the Owner.

7.4 Written Notice

7.4.1 Written notice shall be deemed to have been duly served if delivered in person to the individual or member of the firm or to an officer of the corporation for whom it was intended, or sent by electronic mail (email), or by registered or certified mail to the last business address known to the person who gives the notice.

7.5 Claims for Damages

7.5.1 Should either party to the Contract suffer injury or damage to person or property because of any act or omission of the other party or any of its employees, agents or others for whose acts the party is legally liable, claim shall be made in writing to such other party within seven (7) days of the first observance of such injury or damage.

7.6 Performance Bond and Labor and Material Payment Bond

7.6.1 For projects advertised with an estimated base bid amount of One Hundred Fifty Thousand Dollars ($150,000) or more, the Contractor shall furnish and pay for an approved one hundred percent (100%) combination performance and payment bond (Contractor's Bond for Construction, Public Works Division Form DAPW 15). This bond shall adhere to the requirements of IC. 4-13.6-7-6 and IC. 4-13.6-7-7 as amended and shall cover the faithful performance of the Contract and the payment of all obligations arising thereunder, including reimbursement for any stored materials paid for but returned to materialmen, with such sureties as the Owner may approve. The combination bond shall remain in effect throughout the entire construction period and in addition for a period of one year from the date of final acceptance. The Contractor shall deliver the required bonds to the Owner prior to execution of the Contract by the Owner unless authorized to the contrary in writing by the Owner. All bonds must be issued by bonding companies, which are licensed and approved by the Indiana Insurance Commission.

7.7 Owner's Right to Carry Out the Work

7.7.1 If the Contractor should default or neglect to carry out the Work properly or fail to perform any provision of the Contract, the Owner may, after giving seven (7) days written notice to the Contractor, without prejudice to any other remedy it may have, make good such deficiencies. In such case, an appropriate change order shall be issued deducting the cost thereof including the cost of the Designer's additional service made necessary by such default, neglect, or failure of the Contractor, from the payments then or thereafter due the Contractor, provided, however, that the Designer shall approve both such action and the amount charged to the Contractor. If such payments due to the Contractor are not sufficient to cover such amount, the Contractor shall pay the difference to the Owner.

7.8 Royalties and Patents

7.8.1 The Contractor shall pay all royalties and license fees. Contractor shall defend all suits or claims for infringement of any patent rights and shall save the Owner harmless from liability of any nature or find including costs and expenses for or on account of any patented or unpatented invention, process, article or appliance manufactured or used in the performance of this Contract, including its use by the Owner.

7.9 Tests & Substitution of Materials

7.9.1 If the Contract Documents, laws, ordinances, rules, regulations, or orders of any public authority having jurisdiction require any work to be inspected, tested, or approved, the Contractor will give the Designer timely notice of its readiness and of the date fixed for such inspection, testing, or approval so that the Designer may observe the same. The Contractor shall bear all cost of such inspections, tests, and approvals unless otherwise provided.

7.9.2 If, after the commencement of the Work, the Designer, with approval of the Owner in writing, determines that the Work requires special inspection, testing, or approval for which subparagraph 7.9.1 does not provide, Designer will, upon written authorization from the Owner, order such special inspection, testing or approval. If such special inspection or test reveals a failure of the Work to fulfill the requirements of the Contract Documents, laws, ordinances, rules, regulations or orders of any public authority having jurisdiction, the Contractor shall bear all costs thereof; otherwise, the Owner shall bear such costs. An appropriate change order shall be issued.

7.9.3 Required certificates of inspection, testing or approval shall be secured by the Contractor and promptly delivered by Contractor to the Designer.

7.9.4 Observations by the Designer of the inspections, tests, or approvals required by Article 7 will be promptly made, and where practicable at the source of supply at no additional cost to the Owner.

7.9.5 Neither the observations of the Designer in its administration of the Contract, nor inspections, tests or approvals by persons other than the Contractor shall relieve the Contractor from its obligations to perform the Work in accordance with the Contract Documents.

7.9.6 All building construction and work, alterations, repairs, plumbing, mechanical, and electrical installations and appliances connected therewith, shall comply with the Rules and Regulations of the Indiana Department of Homeland Security, the Indiana Department of Health, local ordinances, Rules for Licensure of Building Trades, and other statutory provisions pertaining to this class of work; such rules and regulations and local ordinances to be considered as a part of these specifications.

7.9.7 Where in these specifications, one or more certain materials, trade names, or articles of certain manufacture are mentioned, it is done for the express purpose of establishing a basis of durability and efficiency and not for the purpose of limiting competition. Approval of other acceptable products for those specified may be obtained by requesting to the Designer no later than fourteen (14) days in advance of bid date with all documentation required for the Designer to evaluate any approval. If approval is granted, the subject product will be added by addendum.

7.9.8 Should there be a reason for change of materials after award of the Contract, the following criteria shall apply:

a. Original material no longer manufactured,
b. Delivery not possible within time specified for job, and/or
c. Unavailability due to causes beyond the control of the Contractor.

7.9.9 After agreement by the Designer and the Owner that a change is necessary, the Contractor shall present a request for substitution to the Designer. The burden of proof of the merit of the proposed substitute is upon the proposing party. The decision of the Designer and the Owner regarding the substitution shall be final.

7.10 Certificate of Qualification

7.10.1 In accordance with IC. 4-13.6-4 as amended, all Contractors and Subcontractors performing work for the State of Indiana on projects estimated to be in excess of one hundred fifty thousand dollars ($150,000.00), must hold a valid Certificate of Qualification issued by the Public Works Certification Board. The Instructions to Bidders define the procedure for certification and bidding.

7.10.2 The Contractor must perform at least fifteen (15) percent of the total Contract Sum of the Work with its own forces. The Contractor shall submit copies of its payroll records, if requested by the Owner, showing the hours, rates and total costs for all personnel on its payroll detailed to the degree to ensure compliance with this paragraph and any Wage Determination provisions, if required.

7.11 Appropriation

7.11.1 The Contract specifically limits payments to be made in accordance with appropriations made and funds made available under laws of the State of Indiana.

7.12 Federal Wage Determination, if required

7.12.1 If a Davis-Bacon wage determination is included in the Contract Documents, it shall be used as the minimum wage and benefits to be paid for the trades indicated.

7.12.2 Contractor shall submit a schedule of hourly wages to be paid to each employee (including those of its subcontractors) engaged in work on the site. This submittal shall be on Contractor's letterhead stationery and shall be signed by the Contractor and notarized. A copy of this submittal shall be conspicuously posted at the site.

7.12.3 Said rates shall in no case be less than those set out in the Davis-Bacon wage schedule a copy of which is herein bound or is on file with the Owner if it is required.

7.12.4 The Contractor shall provide (and require each Subcontractor to provide) weekly payroll records listing employees engaged in work on the site for the week and the hourly rates for base pay and benefits paid to each employee listed. The payroll record form shall include a statement by the Contractor/Subcontractor certifying the accuracy and completeness of the information provided. Payroll records shall be maintained by the Contractor during the course of the Work until the end of the required warranty period.

7.13 Out-of-State Contractors

7.13.1 Out-of-State business entities must be authorized to do business in the State, pursuant to Indiana Code Title 23, prior to submitting bids. Forms may be obtained by contacting the Secretary of State, State of Indiana, Indianapolis, Indiana.

7.14 Material Delivery

7.14.1 Shipments of material to be used by the Contractor or any Subcontractor under this Contract should be delivered to the job site only during the regular working hours of the Contractor or Subcontractor. If a delivery is made during other than the normal working hours of the Contractor or Subcontractor, its authorized agent must be on duty to receive such material. No employee of the Owner is authorized to receive any shipments designated for the Contractor or Subcontractor.

7.15 Weather

7.15.1 The Contractor shall at all times provide protection against weather, rain, wind, storms, frost or heat, so as to maintain all work, materials, apparatus and fixtures free from injury or damage. At the end of the day's work, all new work likely to be damaged shall be covered.

7.15.2 During cold weather, the Contractor shall protect all work from damage. If low temperature makes it impossible to continue operations safely, in spite of cold weather precaution, the Contractor shall cease work and shall so notify the Owner and Designer.

7.15.3 Any work damaged by failure to provide protection above required, shall be removed and replaced with new work at the Contractor's expense.

7.15.4 The Contractor shall provide and maintain on the premises, where directed, watertight storage shed (or sheds) for storage of all materials, which might be damaged by exposure to weather.

7.16 Fire Hazards

7.16.1 Wherever and whenever any burning, welding, cutting or soldering operation is in progress, or equipment is in use, or any work involving a fire hazard, is performed, the Contractor responsible for such operation shall have at all times acceptable fire extinguisher or protection within five (5) feet of the operation.

7.17 Dismissal

7.17.1 Any foreman or workman employed by the Contractor or by any Subcontractor who, in the opinion of the Director, Public Works Division and/or the Designer, does not perform his/her work in a proper and skillful manner, or is disrespectful, intemperate, disorderly, intoxicated or otherwise objectionable shall at the written request of either of the above, be forthwith discharged by the Contractor or Subcontractor employing such foreman or workman and said employee shall not be employed again on any portion of the Work without the written consent of the Director of the Division of Public Works and the Designer. Should the Contractor fail to furnish suitable and sufficient machinery, equipment or personnel for the proper prosecution of the Work, the Owner or Designer may withhold all payments that are or may become due, or may suspend the Work until such orders are upheld.

ARTICLE 8 TIME

8.1 Definitions

8.1.1 Unless otherwise provided, the Contract Time is the period of time allotted in the Contract Documents for Substantial Completion of the Work as defined herein, including authorized adjustments thereto.

8.1.2 The date of commencement of the Work is the date established in a notice to proceed. If there is no notice to proceed, it shall be the date of the approval by the final state approving agency on the Owner-Contractor Contract or such other date as may be established therein.

8.1.3 The Date of Substantial Completion of the Work, or designated portion thereof, is the date certified by the Director, Public Works Division, when construction is sufficiently complete, in accordance with the Contract Documents, so the Owner may occupy or utilize the Work, or designated portion thereof, for the use for which it is intended.

8.1.4 The term day as used in the Contract Documents shall mean calendar day unless otherwise specifically designated.

8.2 Progress and Completion

8.2.1 All time limits stated in the Contract Documents are of the essence of the Contract.

8.2.2 The Contractor shall begin the Work on the date of commencement as defined herein. Contractor shall carry the Work forward expeditiously with adequate forces and shall achieve Substantial Completion within the Contract Time.

8.2.3 The Owner fully expects the Contractor to employ any and all means necessary to complete the Work within the Contract Time. Conduct of the Owner's affairs, such as unforeseen site conditions or delay in processing change orders, shall <u>not</u> be viewed as justification for delaying the Project unless the Owner can be shown to have breached the Contract. Contractor must employ all reasonable means to execute the Project in a timely manner and in conformance with the Contract Documents even if the Contractor or Designer seeks legal remedy against the Owner for claim of damage.

8.3 Delays and Extensions of Time

8.3.1 If the Contractor is delayed at any time in the progress of the Work by any act or neglect of the Owner or the Designer, or by any employee of either, or by any separate Contractor employed by the Owner, or by changes ordered in the Work, or by labor disputes, fire, unusual delay in transportation, adverse weather conditions not reasonable to anticipate, unavoidable casualties, or

any causes beyond the Contractor's control, or by delay authorized by the Owner pending arbitration, or by any other cause which the Designer determines may justify the delay, then the Contract Time shall be extended by a Change Order for such reasonable time as the Designer may determine.

8.3.2 Claims for extension of time shall be made in writing to the Designer. In case of a continuing delay only one claim is necessary. The Contractor shall provide an estimate of the probable effect of such delay on the progress of the Work.

8.3.3 If no agreement is made stating the dates upon which interpretations as provided in Article 2.2 shall be furnished, then no claim for delay shall be allowed on account of failure to furnish such interpretations until fifteen days after written request is made for them, and not unless such claim is reasonable.

8.3.4 This Paragraph 8.3 does not exclude the recovery of damages for delay by either party under other provisions of the Contract Documents.

ARTICLE 9 PAYMENTS AND COMPLETION

9.1 Contract Sum

9.1.1 The Contract Sum is the total amount payable by the Owner for the performance of the Work under the Contract Documents.

9.2 Schedule of Values

9.2.1 Before the first application for payment, the Contractor shall submit to the Owner a schedule of various parts of the Work, including quantities if required by the Owner, aggregating the total Contract Sum, divided so as to facilitate payments to Subcontractors in accordance with Article 5.3, made out in such form as the Owner and the Contractor may agree upon, and supported by such data to substantiate its correctness as the Owner may require. Each item in the Schedule of Values shall include its proper share of overhead, profit, and other general charges. This schedule, when approved by the Owner, shall be used as a basis for the Contractor's Applications for Progress and Final Payments.

9.3 Progress Payments

9.3.1 Completed work: The Contractor shall submit to the Designer an itemized Application for Payment, supported by such data substantiating the Contractor's right to payment as the Designer may direct. The Owner shall make payments on account of the Contract, upon issuance of Certificates of Payment certified by the Designer and the Owner's Representative, for labor and materials incorporated into the Work at the rate of ninety-four (94%) percent of such value until fifty (50%) percent of the value of the Work is completed. After that fifty (50%) percent, no further retainage will be deducted. The Director, Public Works Division has the option to require that three (3%) percent of the value of the Work be retained throughout the duration of the entire Contract. The retainage schedule shall be determined prior to award of Contract. Retainage may be paid with final payment at the discretion of the Director, Public Works Division, but shall not be paid in any event until a minimum of sixty-one (61) days after all work is completed.

9.3.2 Materials Stored: Payments may be made on account for materials or equipment not incorporated in the Work, but delivered and suitably stored at the site. With written approval of the Owner, materials may be stored at another location other than the Work site if properly identified as the property of the Owner and properly protected. Storage of material at the place of business of the vendor is not acceptable (25 IAC 2-9-2). Such payments shall be conditional upon the submission by the Contractor of one of the following: 1) receipts marked by the supplier as paid; 2) supplier's final waiver of lien listing specific materials involved; 3) invoice with copy of canceled check showing payment; or 4) such other evidence of payment as the Owner may require in lieu thereof to establish ownership of all items except those listed as miscellaneous materials below. For the aggregate of miscellaneous stored materials for which payment is requested and above proof of payment is not available, a complete list will be provided along with the affidavit of payment. Upon certification by the Owner's representative that the listed materials are suitably stored, payment can be made. Miscellaneous materials are defined as pipe, fittings, wire, conduit, etc., normally stored as stock items in Contractor's warehouse. For materials stored other than at the construction site applicable insurance and transportation to the site shall be provided by the Contractor.

9.3.3 As stored materials are incorporated into the Work, the value shall be removed from the total value of stored materials requested in successive payments. Proof of ownership through one of the above methods will be required for additional materials. When, in the judgment of the Owner, retainage for completed work is not sufficient in relation to excessive amounts requested for stored materials or equipment, the Owner may elect to place the retainage for such materials or equipment in escrow. This retainage shall apply as a credit toward retainage due to be held for completed work on future payments.

9.3.4 The Contractor warrants that title to all work, materials and equipment covered by an Application for Payment will pass to the Owner either by incorporation in the construction or upon the receipt by the Contractor of payment, whichever occurs first, free and clear of all liens, claims, security interest or encumbrances, hereinafter referred to in this Article 9 as "liens"; and that no Work, materials or equipment covered by an Application for Payment will have been acquired by the Contractor, or by any other person performing work at the site or furnishing materials and equipment for the Project, subject to an agreement under which an interest

therein or an encumbrance thereon is retained by the seller or otherwise imposed by the Contractor or such other person.

9.3.5 The Contractor shall accompany each application for payment request with a certification that all Subcontractors (fabricators) have been paid within ten (10) days of receipt of payment that pro rata amount of funds Contractor has received from the Owner for the value of work or services (fabricated materials or equipment) performed by the Subcontractor (supplied by fabricator) contained in previous progress payments. The Contractor's inclusion of a value of subcontract work in its progress pay estimate is prima facie evidence of acceptance of work having such a value; therefore, if the Owner receives a certification from a Subcontractor that Subcontractor has not been paid such amounts as were included in the Contractor's partial billing and subsequently paid to the Contractor by the Owner, then the Owner will hold all subsequent partial payment requests until satisfactory evidence is received from the Subcontractor that Subcontractor has been paid such amounts presented to the Owner by the Contractor, paid to the Contractor by the Owner, and not distributed by the Contractor to the Subcontractor. The making of an incorrect certification of either partial payment or final payment may be considered by the Owner to be a breach of contract, and Owner may exercise all of its prerogatives set out in the Contract in addition to the remedies for falsifying an affidavit. Such an action could result in a suspension of qualification with the State Certification Board for a period of up to two (2) years.

9.4 Certificates for Payment

9.4.1 When the Contractor has made application for payment as above, the Designer will issue a Certificate of Payment to the Owner for such amount as Designer determines to be properly due, or state in writing its reasons for withholding a certificate as provided in Articles 9.5.1.

9.4.2 The issuance of a Certificate for Payment will constitute a representation by the Designer to the Owner, based on the Designer's observations at the site as provided in Article 2.2.4 and the data comprising the Application for Payment, that the Work has progressed to the point indicated, and that, to the best of its knowledge, information and belief, the quality of work is in accordance with the Contract Documents subject to an evaluation of the Work as a functioning whole upon substantial completion, to the results of any subsequent tests called for in the Contract documents, to minor deviations correctable prior to the next certificate for payment and to any specific qualifications stated in its certificate, and that the Contractor is entitled to payment in the amount certified.

9.4.3 The Designer's final Certificate for Payment will constitute a further representation that the conditions precedent to the Contractor's being entitled to final payment as set forth in Article 9.7 have been fulfilled. However, by issuing a Certificate, the Designer shall not thereby be deemed to represent that Designer has made any examination to ascertain how or for what purpose the Contractor has used the monies paid on account of the Contract Sum.

9.4.4 The Owner shall make payment as soon as the fiscal procedure of the State can process same after receipt from the Designer of the Certificate for Payment. The fiscal procedure by the State can include, but not be limited to, review by the Owner's using agency, verification of the Certificate by the Owner's Site Representative, review for accuracy of form and calculation by the Owner's accountant, review by the Owner's project management and execution by the Director, Public Works Division, and others.

9.4.5 No certificate for a progress payment or progress payment for partial or entire occupancy of the Project by the Owner shall constitute an acceptance of work not in accordance with the Contract Documents.

9.4.6 Pursuant to IC. 4-13.6-7-2 all Contract awards of One Million Dollars ($1,000,000) or above, if elected by the Contractor, an escrow agent will be selected by the State with whom the retainage funds for this Contract will be deposited and held until receipt of notice from the Director, Public Works Division (Escrow Form DAPW 32A) and from all other necessary parties as specified in and in accordance with the procedures and provisions of said Act.

9.5 Payments Withheld

9.5.1 The Designer (or Owner) will not approve an application in whole or in part, if in Designer's opinion, Designer is unable to make representations to the Owner as provided in Article 9.4. The Designer (or Owner) will not approve Application for Payment or, because of subsequent inspections, may nullify the whole or any part of the Certificate for Payment previously issued to such extent as may be necessary in Designer's opinion to protect the Owner from loss because of:

A. defective work not remedied,
B. claim filed or reasonable evidence indicating probable filing of claims,
C. failure of the Contractor to make payments properly to Subcontractors or for materials, equipment or labor,
D. reasonable doubt that the Contract can be completed for the unpaid balance,
E. damage to another Contractor,
F. reasonable indication that the Owner may be damaged by delay in receiving use of the Work as scheduled, or,
G. unsatisfactory prosecution of the Work by the Contractor.

9.5.2 When the above grounds are removed, payment shall be processed for amounts withheld.

9.6 Failure of Payment

9.6.1 If the Designer should fail to issue any Certificate for Payment, through no fault of the Contractor, or if the Owner should fail to pay the Contractor in a reasonable time considering the fiscal procedures of the State for processing same after receipt from the Designer the amount certified by the Designer, then the Contractor may, after seven (7) additional days, give written notice to the Owner and Designer, that work will stop until payment of the amount owing has been received.

9.7 Substantial Completion and Final Payment

9.7.1 When advised by the Contractor that the Work or a designated portion thereof is substantially complete, the Designer; the Director, Public Works Division, and the Contractor shall determine jointly by inspection that the Work is substantially complete. If they determine that the Work is substantially complete, the Contractor shall then prepare a Certificate of Substantial Completion with an accompanying list of incomplete items of work (punch list) and submit it to the Designer for its signature and subsequent forwarding for approval by the Director, Public Works Division. The Certificate shall fix the date of Substantial Completion and shall state the responsibilities of the Owner and the Contractor for maintenance, heat, utilities and insurance.

9.7.2 Upon approval of the above, and notice that the Work is ready for final acceptance, the Designer, the Contractor and Owner will promptly make final review, and when they find the Work acceptable under the Contract and the Contract fully performed, the Contractor shall promptly submit the final Certificate for Payment with all other required documents, showing that the Work has been completed in accordance with the terms and conditions of the Contract, and that the entire balance in said final certificate, is due and payable.

9.7.3 Neither the final payment nor any part of the retained percentage shall become due until the Contractor shall submit to the Designer releases or waivers of all liens arising out of the Contract; an affidavit that the releases and waivers include all the labor, materials, and equipment for which a lien could be filed and that all payrolls, material bills, and other indebtedness connected with the Work for which the Owner or its property might in any way be responsible have been paid or otherwise satisfied; and such other data establishing payment or satisfaction of all such obligations as the Owner may require. If any such lien or claim remains unpaid, the Contractor shall refund to the Owner all monies that the latter may be compelled to pay in discharging such lien or claim, including all costs.

9.7.4 If, after Substantial Completion of the Work, final completion thereof is materially delayed through no fault of the Contractor, and the Designer so confirms, the Owner shall, upon certification by the Designer, and without terminating the Contract, make payment of the balance due for that portion of the Work fully completed and accepted, or such portion as may be available from funds not already released to an escrow agent pursuant to IC 4-13.6-7. Such payment shall be made under the terms and conditions governing final payment, except that it shall not constitute a waiver of claims.

9.7.5 The making of final payment shall constitute a waiver of all claims by the Owner except those arising from:

A. unsettled liens,
B. faulty work appearing after Substantial Completion,
C. failure of the Work to comply with the requirements of the Contract Documents,
D. terms of any special guarantees required by the Contract Documents.

9.7.6 If upon Substantial Completion of the Work there are any remaining uncompleted minor items, the Owner shall withhold, until those items are completed, an amount equal to two hundred percent (200%) of the value of each item as determined by the Designer or Owner.

9.7.7 The acceptance of final payment shall constitute a waiver of all claims by the Contractor, except those previously made in writing and still unsettled and covered by other agreed arrangements.

ARTICLE 10 PROTECTION OF PERSONS AND PROPERTY

10.1 Safety Precautions and Programs

10.1.1 The Contractor shall be responsible for initiating, maintaining and supervising all safety precautions and programs in connection with the Work.

10.2 Safety of Person and Property

10.2.1 The Contractor shall take all necessary precautions for the safety of, and will provide all necessary protection to prevent damage, injury, or loss to:

A. all employees on the Project and all other persons who may be affected thereby,
B. all the Work and all materials and equipment to be incorporated therein, whether in storage on or off the site, and,
C. other property at the site or adjacent thereto, including trees, shrubs, lawns, pavements, roadways, structures and

utilities not designated for removal, relocation or replacement in the course of construction.

10.2.2 The Contractor shall comply with all applicable laws, ordinances, rules, regulations and orders of any public authority having jurisdiction for the safety of persons or property or to protect them from damage, injury, or loss. Contractor shall erect and maintain, as required by the conditions and progress of the Work, all necessary safeguards for safety and protection, including posting danger signs and other warnings against hazards, promulgating safety regulations, and notifying owners and users of adjacent utilities.

10.2.3 All damage or loss to all property specified herein caused directly or indirectly, in whole or in part, by the Contractor, any Subcontractor, or anyone directly or indirectly employed by any of them, or by anyone for whose acts any of them may be liable, shall be remedied by the Contractor, except damage or loss attributable solely to faulty Contract Documents or to the acts or omissions of the Owner, or Designer or their employees, or for those whose acts either of them may be liable.

10.2.4 The Contractor shall designate a responsible member of its organization on the Work whose duty shall be the prevention of accidents. This person shall be the Contractor's superintendent, unless otherwise designated in writing by the Contractor to the Owner and the Designer.

10.2.5 When the use or storage of explosives or other hazardous materials or equipment is necessary for the prosecution of the Work, the Contractor shall carry on such activities under the supervision of properly qualified personnel.

10.2.6 The Contractor shall not overload, or permit any part of the Work to be loaded so as to endanger its safety.

10.2.7 All excavations creating a trench of five (5) or more feet in depth shall strictly adhere to the shoring and other safety requirements called for and described under Indiana OSHA Regulation 29 C.F.R. 1926, Subpart "P", for trench safety systems.

10.3 Emergencies

10.3.1 In an emergency affecting the safety of persons or property, the Contractor shall act, at its discretion, to prevent threatened damage, injury or loss. Any additional compensation or extension of time claimed by the Contractor because of emergency work shall be determined as provided for in Article 12, Changes in the Work, and Contractor shall notify the Owner of such a decision within seven (7) days of the event giving rise to such claim.

ARTICLE 11 INSURANCE

11.1 General Requirements for Insurance

11.1.1 The Contractor will be required to furnish to the Owner, evidence of its compliance with all items of insurance listed herein and in the Contract. All insurance policies/certificates shall be on file with the Owner prior to release of the signed Contract and commencement of work.

11.1.2 The Contractor shall purchase and maintain, with a company or companies licensed to do business in Indiana, such insurance as will protect Contractor from claims set forth below, arising out of or resulting from the Contractor's operations under the Contract, whether such operations be by the Contractor or by any Subcontractor or by anyone directly or indirectly employed by any of them:

A. claims under Workmen's Compensation Acts and other employee benefit acts;
B. claims for damages because of bodily injury, personal injury, occupational sickness or disease, or death of its employees;
C. claims for damages because of bodily injury, personal injury, sickness, disease or death of any person other than its employees;
D. claims for damages to tangible property, including loss of use thereof.

11.1.3 This insurance shall be written for not less than any limits of liability specified herein, or required by law, whichever is greater. Policies or certificates of insurance, acceptable to the Owner, shall be filed with the Owner prior to execution of the Contract. These Certificates shall contain a provision that coverages afforded under the policies will be for the life of the Work.

11.1.4 Policies (certificates) shall show name and complete address of the Company, expiration date or dates, and policy number or numbers. Policies shall not be canceled until at least thirty (30) days prior written notice has been given to the Owner and acknowledged by the Owner in writing.

11.2 Property Insurance

11.2.1 The Contractor shall furnish and maintain, at the Contractor's expense, Fire, Extended Coverage, Vandalism, and Malicious Mischief Insurance (Builder's Risk), in the sum of 100% of the Contract amount. Builder's Risk insurance shall cover the structure on/in which the Work of this Contract is to be done including items of labor and material connected therewith, whether in or adjacent to the structure insured; material in place or to be used as part of the permanent construction, including surplus materials; shanties, protective fences, bridges, or temporary structures; miscellaneous materials and supplies incident to the Work; scaffolding, staging, towers, forms, and equipment, if included in the cost of the Work. This insurance need not cover any tools owned by mechanics, or any tools, equipment, scaffolding, staging, towers, and forms owned or rented by the Contractor, the capital value of which is not included in the cost of the Work.

11.2.3 Any loss under this Article 11.2 is to be adjusted with the Owner and made payable to the Owner as trustee for the insured, as their interests may appear.

11.3 Liability Insurance

11.3.1 The Contractor and their subcontractors (if any) shall secure and keep in force during the term of this Contract the following insurance coverages (if applicable) covering the Contractor for any and all claims of any nature which may in any manner arise out of or result from Contractor's performance under this Contract:

A. Commercial general liability, including contractual coverage, and products or completed operations coverage (if applicable), with minimum liability limits not less than $700,000 per person and $5,000,000 per occurrence unless additional coverage is required by the State. The State is to be named as an additional insured on a primary, non-contributory basis for any liability arising directly or indirectly under or in connection with this Contract.

B. Automobile liability for owned, non-owned and hired autos with minimum liability limits of $700,000 per person and $5,000,000 per occurrence. The State is to be named as an additional insured on a primary, non-contributory basis.

C. The Contractor shall provide proof of such insurance coverage by tendering to the undersigned State representative a certificate of insurance prior to the commencement of this Contract and proof of workers' compensation coverage meeting all statutory requirements of IC §22-3-2. In addition, proof of an "all states endorsement" covering claims occurring outside the State is required if any of the services provided under this Contract involve work outside of Indiana.

D. The Contractor's insurance coverage must meet the following additional requirements:

1. The insurer must have a certificate of authority or other appropriate authorization to operate in the state in which the policy was issued.

2. Any deductible or self-insured retention amount or other similar obligation under the insurance policies shall be the sole obligation of the Contractor.

3. The State will be defended, indemnified and held harmless to the full extent of any coverage actually secured by the Contractor in excess of the minimum requirements set forth above. The duty to indemnify the State under this Contract shall not be limited by the insurance required in this Contract.

4. The insurance required in this Contract, through a policy or endorsement(s), shall include a provision that the policy and endorsements may not be canceled or modified without thirty (30) days' prior written notice to the undersigned State agency.

5. The Contractor waives and agrees to require their insurer to waive their rights of subrogation against the State of Indiana.

E. Failure to provide insurance as required in this Contract may be deemed a material breach of contract entitling the State to immediately terminate this Contract. The Contractor shall furnish a certificate of insurance and all endorsements to the State before the commencement of this Contract.

F. Boiler and Machinery Explosion Insurance shall be required when the Work includes boiler, other pressure

vessels or steam piping installation or repair.

G. After June 30, 2015, this entire Article will apply to **any** contractor that will be on the construction site pursuant to IC 5-16-13 and an acceptable certificate of insurance will be provided by each and every contractor.

ARTICLE 12 CHANGES IN THE WORK

12.1 Change Orders

12.1.1 The Owner, without invalidating the Contract, may order changes in the Work consisting of additions, deletions, or modifications, with the Contract Sum and the Contract Time being adjusted accordingly. All such changes in the Work shall be authorized by Change Order, and shall be executed under the applicable conditions of the Contract Documents.

12.1.2 A Change Order is a written order to the Contractor compiled and reviewed by the Designer, prepared by the Owner and then signed by the Owner and the Contractor. The order is issued after the execution of the Contract authorizing a change in the Work, and documenting any adjustment in the Contract Sum and/or the Contract Time. The Contract Sum may be changed only by change order.

12.1.3 The value of any work involved in a change in the Work shall be determined in one or more of the following ways, in order of priority listed:

A. by mutual acceptance of a lump sum. For all amounts over $500, the Contractor shall provide a complete listing of quantities and unit prices of materials, hours of labor with cost per hour, and separate agreed percentages for any overhead and profit. The maximum aggregate increase for overhead and profit (including all home office and field office overhead) for any Subcontractor or for the Contractor performing its own work is fifteen (15%) percent; the maximum increase for a Contractor on work performed by a Subcontractor is five (5%) percent. If the cost of performance and payment bond(s) is shown as a separate line item in the Contractor's schedule of values for the project, then an increase will be permitted to provide for the additional cost of the bond(s). If the cost of the bond(s) is not indicated on the Contractor's schedule of values for the Project, any increase in cost for bond(s) shall be included in the Contractor's allowed overhead. For listings under $500, list lump sum for each item, or,
B. by unit prices named in the Contract or subsequently agreed upon, or,
C. by cost plus a mutually acceptable fixed or percentage fee.

12.1.4 Should conditions be encountered below the surface of the ground that are:

A. at variance with the conditions indicated by the Contract Documents, and
B. different than could be expected after a reasonable viewing of the site by the bidders, and
C. not evident from available soil samples,

then the Contract sum may be equitably adjusted by Change Order upon claim by Contractor made within a reasonable time after the first observance of the conditions.

12.1.5 If the Contractor claims that a written interpretation issued pursuant to Article 1.2 or a written order for a minor change issued pursuant to Article 12.3 involves additional cost or time, the Contractor shall make such claim as provided in Article 12.2.

12.2 Claims for Additional Cost or Time

12.2.1 If the Contractor wishes to make a claim under the provisions of the Contract Documents for an increase in the Contract Sum or an extension in the Contract Time, Contractor shall give the Designer written notice thereof within fifteen (15) days after the occurrence of the event giving rise to such claim. This notice shall be given by the Contractor and authority received in writing from the Owner before proceeding to execute the Work, except in an emergency endangering life or property. No such claim shall be valid unless so made. Any approved change in the Contract Sum or Contract Time resulting from such claim shall be incorporated in a Change Order, initiated by the Designer and executed by the Owner. If the Designer does not initiate or the Owner execute a Change Order within a reasonable time in response to the request, such lack of action shall be construed as prima facie evidence of rejection of the request. For the purpose of this section "reasonable time" is expected not to exceed 30 days after receipt by the Owner.

12.3 Minor Changes in the Work

12.3.1 The Designer shall have authority, with Owner's approval, to order minor changes in the Work not involving an increase in the Contract Sum or an extension of the Contract Time and not inconsistent with the intent of the Contract Documents. Such change may be affected by written field order, with copy transmitted to the Owner. Such minor changes need not be approved in writing by the Owner; however, the Owner may provide written approval of any substitution of significant materials or equipment.

12.4 Field Orders

12.4.1 The Designer may issue written field orders, which interpret the Contract Documents in accordance with Article 1.2.4 without change in Contract Sum or Contract Time. The Contractor shall carry out such field orders promptly. The Designer shall

transmit copies of field orders to the Owner.

ARTICLE 13 EXAMINATION AND CORRECTION OF WORK

13.1 Examination of Work

13.1.1 If any portion of the Work should be covered contrary to the request of the Designer or to requirements specifically expressed in the Contract Documents, it must, if required in writing by the Designer, be uncovered for Designer's observation and shall be replaced at the Contractor's expense.

13.1.2 Examination of questioned work may be ordered by the Designer with the approval of the Owner, and if so ordered the Work must be uncovered by the Contractor. If such work were found in accordance with the Contract Documents, the cost of re- examination and replacement shall, by appropriate change order, be charged to the Owner. If such work be found not in accordance with the Contract Documents, the Contractor shall pay such costs, unless it is found that the defect in the Work was caused by a separate Contractor employed as provided in Article 6 and in that event, the separate Contractor shall pay such costs.

13.2 Correction of Work before Substantial Completion

13.2.1 The Contractor shall promptly remove from the site all work rejected by the Designer as failing to conform to the Contract Documents, whether or not incorporated in the Project, and the Contractor shall promptly replace and re-execute its own work in accordance with the Contract Documents and without cost to the Owner and shall bear the cost of repair to or replacement of all work of separate Contractors destroyed or damaged by such removal or replacement.

13.2.2 If the Contractor does not remove such rejected work within a reasonable time, fixed by written notice from the Designer, the Owner may remove and store the material at the expense of the Contractor. If the Contractor does not agree to pay or credit the Contract with the cost of such removal within ten days thereafter, the Owner may acquire a lien upon such property and materials. If proceeds of lien foreclosure do not cover all costs, which the Owner has then borne, the difference shall be deducted from the amount to be paid to the Contractor.

13.3 Correction of Work after Substantial Completion

13.3.1 The Contractor shall correct all faults and deficiencies in the Work which appear within one year of the date of substantial completion or such longer period of time as may be prescribed by the terms of any special guarantees called for by the Contract Documents, and Contractor shall pay for all damage to other work caused thereby. The Contractor shall remove all defective work where necessary.

13.3.2 If the Contractor does not correct such faulty or defective work and remove defective work where necessary, within a reasonable time fixed by the Designer in writing, the Owner may do the corrective work and remove the defective work, as described in Article 13.2 above.

13.3.3 All costs attributable to correcting and removing faulty or defective work shall be borne by the Contractor.

13.3.4 The obligations of the Contractor under this Article 13.3 shall be in addition to and not a limitation of any obligations imposed upon Contractor by special guarantees called for by the Contract Documents or otherwise prescribed by law.

ARTICLE 14 TERMINATION OF THE CONTRACT

14.1 Termination by the Contractor

14.1.1 If the Work is stopped for a period of thirty days under an order of any court or other public authority through no act of fault of the Contractor or of anyone employed by the Contractor, or if the Work should be stopped for a period of thirty days by the Contractor for the Designer's failure to issue a Certificate for payment as provided in Article 9.6, or for the Owner's failure to make payment thereon as provided in said Article, then the Contractor may, upon seven days' written notice to the Owner and the Designer, terminate the Contract and recover from the Owner, in satisfaction of all claims of the Contractor, payment for all work executed, except those items involved in Designer's failure to issue Certificate, or Owner's failure to make payment.

14.2 Termination by the Owner

14.2.1 If the Contractor should be adjudged bankrupt, or if Contractor should make a general assignment for the benefit of its creditors, or if a receiver should be appointed on account of Contractor's insolvency, or if Contractor should persistently or repeatedly refuse or should fail, except in cases for which extension of time is provided, to supply enough properly skilled workmen or proper materials, or if Contractor should fail to make prompt payment to Subcontractors for materials or labor, or persistently disregard laws, ordinances, rules, regulations or orders of any public authority or otherwise be guilty of a substantial violation of a provision of the Contract Documents, then the Owner, upon certification by the Designer that sufficient cause exists to justify such action, may without prejudice to any right or remedy against the Contractor or its surety and after giving the Contractor and its surety seven days written

notice, terminate the employment of the Contractor and take possession of the site and of all materials, equipment, tools, and construction equipment and machinery thereon owned by the Contractor and finish the Work by whatever method the Owner deems expedient. In such case the Contractor shall not be entitled to receive any further payment until the Work is completed, and an accounting made as set out below.

14.2.2 If the unpaid balance of the Contract sum exceeds the cost of finishing the Work, including compensation for the Designer's additional services such excess shall be paid to the Contractor. If such cost exceeds such unpaid balance, the Contractor shall pay the difference to the Owner. The Designer shall certify the cost incurred by the Owner as herein provided.

END

INDIANA DEPARTMENT OF ADMINISTRATION, PUBLIC WORKS DIVISION

GENERAL CONDITIONS

ADDENDUM

PROJECT ESTIMATED BY DEPARTMENT OF ADMINISTRATION,

PUBLIC WORKS DIVISION

TO BE BID AT FIVE HUNDRED THOUSAND DOLLARS ($500,000) AND ABOVE

8.2. Progress and Completion - Addendum

8.2.4 If the Contractor does not achieve completion of the work by 08/15/2027, liquidated damages will be assessed and recovered by Owner to compensate Owner for such delay in completion. Owner will incur substantial economic damages and losses which are and will hereafter be difficult or impossible to quantify, ascertain and prove as actual damages for such delay. Such damages are foreseen to include, without limitation, extended or additional cost of observation, inspection, engineering, utilities, insurance, administration, and also, indeterminate damages, hindrance, or inconvenience to Owner and its customers, as well as members of the public, deprivation of use and operation, and impairment of financing. Accordingly, in lieu of actual damages, and not as a penalty, Contractor and its Surety shall be liable to the Owner and Owner shall be entitled to collect and recover from Contractor and its Surety, liquidated damages in the amount of $ 500.00 per day each Calendar day that Substantial Completion is delayed beyond the Contract Time. Neither partial acceptance nor partial beneficial occupancy or use of portions of the Work by Owner prior to achievement of Substantial Completion of all elements of the Work shall defeat or impair Owner's rights in respect to liquidated damages applicable to this Project. Such liquidated damages are intended to represent estimated actual damages and are not intended as a penalty, and Contractor and its Surety shall pay them to Owner without limiting Owner's rights to terminate its Contract with Contractor for default as provided elsewhere herein.

8.2.5 The Contract Price shall be deemed to include adequate consideration and payment to compensate Contractor for the risk of liability imposed upon Contractor under these paragraphs (8.2.4, 8.2.5, and 8.2.6) in respect to liquidated damages and Contractor acknowledges and agrees that the respective amounts of such liquidated damages are reasonable with due consideration for the type, nature and extent of the Work and the Contract Price and such liquidated damages fairly approximate the nature and amount of actual damages which Owner may incur as a result of delayed completion, and that such liquidated damages may be assessed and recovered by Owner without proof of evidence concerning the types or amount of such actual damages.

8.2.6 The liquidated damages provided under these paragraphs (8.2.4, 8.2.5, and 8.2.6) shall apply equally to delay in the achievement of completion following abandonment of Work by Contractor or termination by Owner because of Contractor's fault to the extent that such delays are caused in whole or in part by such abandonment, termination, default or other acts or omissions for which Contractor is responsible. No delay or forbearance by Owner in enforcing any rights or remedies under the Contract Documents, including without limitation, the right to termination of the Contractor's right to proceed and the right to engage completion contractors to complete the Work, shall constitute a waiver by Owner or deprive Owner of its right to retain, receive and recover such liquidated damages from Contractor and its Surety or diminish the period of delayed completion from which such liquidated damages are determined.

STATE OF INDIANA'S
STANDARD CONTRACT FOR PUBLIC WORKS CONSTRUCTION PROJECT
(For projects estimated more than $150,000)

Contract # _____

THIS PUBLIC WORKS CONSTRUCTION CONTRACT ("Contract"), entered into by and between the Indiana Department of Administration's Public Works Division ("State") and **XXXXXXXXXX** ("Contractor"), is executed pursuant to the terms and conditions set forth herein and is governed by Indiana Code 4-13.6, *et seq*. In consideration of those mutual undertakings and covenants, the parties agree as follows for the following Public Works Project:

Project Number:	**XXXXXXXXX**
Project Name:	**XXXXXXXXX**
Designer (if applicable):	**XXXXXXXXX**
Purchase Order Number:	**XXXXXXXXX**
Institution/Department:	**XXXXXXXXX**
Req. No:	**XXXXXXXXX**

1. Definitions. The following definition of "Contract Documents" applies throughout this Contract for the State's Public Works Project Number **XXXXX** ("Project").

The term "Contract Documents" shall mean and include the following: this Contract and the Project Bid Package, which includes but is not limited to the Contractor's Application for Pre-Qualification, the Public Work's Solicitation for Quotation (DAPW 30), Bid Documentation, Pre-Contract Document, General Conditions (DAPW 26), Supplementary Conditions, Instructions to Bidders, Drawings, Specifications, and Addenda issued by the State in connection with the Project and prior to the submission of the Contractor's Proposal.

Subject to Section 39, *Order of Precedence, Incorporation by Reference*, of this Contract, Contract Documents shall also consist of the Contractor's Proposal and Response, as well as any other documentation submitted by it in response to the Project (hereinafter collectively referred to as "Contractor's Proposal").

Additionally, Contract Documents shall include any subsequent amendments, change orders and any written interpretations issued as field orders by the Designer pursuant to General Conditions, Article 1.2 (DAPW 26) and all field orders for minor changes by the Designer pursuant to General Conditions, Article 12.3 (DAPW 26). Change orders and amendments shall be executed in the manner authorized by Section 35, *Merger and Modification*, of this Contract.

When applicable, Contract Documents shall include the Performance Bond and/or the Labor and Materials Payment Bond, as required by IC 4-13.6-7-6 and IC 4-13.6-7-7, and fully described and captured in the General Conditions (DAPW 26).

The Contract Documents are specifically and collectively incorporated herein by reference.

2. Duties of Contractor. The Contractor shall furnish all labor and materials, perform all of the work, and otherwise fulfill all of its obligations in conformance with the Contract Documents. These duties are described and captured in the Contract Documents. The Contractor agrees that not less than fifteen percent (15%) of the work, measured in dollar volume, will be performed by its own forces. Any subcontractor

TEMPLATE

employed for any part of this Contract awarded in excess of One Hundred Fifty Thousand Dollars ($150,000.00) shall be qualified with the State of Indiana's Public Works Division Certification Board and shall have a valid Certificate of Qualification in the prime classification of work for this Contract.

3. Consideration. All payments provided herein are subject to appropriations made and funds allocated as provided by laws of the State of Indiana. The State shall pay the Contractor for performance of this Contract in current funds as follows:

BASE BID:	**$XXXXXX.XX**
ALTERNATE(S):	
TOTAL CONTRACT PRICE:	**$XXXXXX.XX**

4. Term. The term of this Contract is [X year(s) and/or xx month(s)] commencing on the date of the last state signatory to this Contract.

5. Licensing Standards. The Contractor and its employees and subcontractors shall comply with all applicable licensing standards, certification standards, accrediting standards and any other laws, rules or regulations governing services to be provided by the Contractor pursuant to this Contract. The State shall not be required to pay the Contractor for any services performed when the Contractor, its employees or subcontractors are not in compliance with such applicable standards, laws, rules or regulations. If licensure, certification or accreditation expires or is revoked, or if disciplinary action is taken against the applicable licensure, certification or accreditation, the Contractor shall notify the State immediately and the State, at its option, may immediately terminate this Contract.

6. Escrow Agreement. Contemporaneously with the execution of this Contract, the parties may provide for the escrow of retained portions of payments to the Contractor by entering into a separate Escrow Agreement, pursuant to IC 4-13.6-7, with an escrow agent described in IC 4-13.6-7-2(b). Should the Contractor elect to escrow retainage, the Escrow Agreement will become a part of this contract as if fully contained herein.

7. Contractor's Certification. The Contractor certifies that it has been pre-qualified by the State of Indiana's Public Works Division Certification Board to perform the work and furnish the services required by this Project. The Contractor further certifies that all information and documentation submitted by it in its Application for Prequalification Certification, the Contractor's Proposal and submitted in response to the Project, is true, accurate and complete as of the date of this Contract's effectiveness. The Contractor shall immediately notify the State of any material change to such information. The Contractor shall immediately notify the State if, during the course of performance of this Contract, it or any of its principals are proposed for debarment or ineligibility, or become debarred or declared ineligible, from entering into contracts with the federal government or any department, agency or political subdivision of the State.

8. Contractor Employee Drug Testing. Pursuant to IC 4-13-18, the Contractor shall implement the employee drug testing program submitted as part of its Contractor's Proposal. The State may cancel this Contract if it determines that the Contractor:

A. Has failed to implement its employee drug testing program during the term of this Contract;

B. Has failed to provide information regarding implementation of the Contractor's employee drug testing program at the request of the State; or

TEMPLATE

C. Has provided to the State false information regarding the Contractor's employee drug testing program.

9. Access to Records. The Contractor and its subcontractors, if any, shall maintain all books, documents, papers, accounting records, and other evidence pertaining to all costs incurred under this Contract. They shall make such materials available at their respective offices at all reasonable times during this Contract, and for three (3) years from the date of final payment under this Contract, for inspection by the State or its authorized designees. Copies shall be furnished at no cost to the State if requested.

10. Assignment; Successors.
A. The Contractor binds its successors and assignees to all the terms and conditions of this Contract. The Contractor may assign its right to receive payments to such third parties as the Contractor may desire without the prior written consent of the State, provided that the Contractor gives written notice (including evidence of such assignment) to the State thirty (30) days in advance of any payment so assigned. The assignment shall cover all unpaid amounts under this Contract and shall not be made to more than one party.

B. The Contractor shall not assign or subcontract the whole or any part of this Contract without the State's prior written consent. Additionally, the Contractor shall provide prompt written notice to the State of any change in the Contractor's legal name or legal status so that the changes may be documented and payments to the successor entity may be made.

11. Assignment of Antitrust Claims. As part of the consideration for the award of this Contract, the Contractor assigns to the State all right, title and interest in and to any claims the Contractor now has, or may acquire, under state or federal antitrust laws relating to the products or services which are the subject of this Contract.

12. Audits. The Contractor acknowledges that it may be required to submit to an audit of funds paid through this Contract. Any such audit shall be conducted in accordance with IC § 5-11-1, *et seq.*, and audit guidelines specified by the State.

The State considers the Contractor to be a "Contractor" under 2 C.F.R. 200.331 for purposes of this Contract. However, if it is determined that the Contractor is a "subrecipient" and if required by applicable provisions of 2 C.F.R. 200 (Uniform Administrative Requirements, Cost Principles, and Audit Requirements), Contractor shall arrange for a financial and compliance audit, which complies with 2 C.F.R. 200.500 *et seq*.

13. Authority to Bind Contractor. The signatory for the Contractor represents that he/she has been duly authorized to execute this Contract on behalf of the Contractor and has obtained all necessary or applicable approvals to make this Contract fully binding upon the Contractor when his/her signature is affixed, and accepted by the State.

14. Changes in Work. The Contractor shall not commence any additional work or change the scope of the work until authorized in writing by the State. The Contractor shall make no claim for additional compensation in the absence of a prior written approval and amendment executed by all signatories hereto. This Contract may only be amended, supplemented or modified by a written document executed in the same manner as this Contract.

15. Compliance with Laws.

A. The Contractor shall comply with all applicable federal, state, and local laws, rules, regulations, and ordinances, and all provisions required thereby to be included herein are hereby incorporated by reference. The enactment or modification of any applicable state or federal statute or the promulgation of rules or regulations thereunder after execution of this Contract shall be reviewed by the State and the Contractor to determine whether the provisions of this Contract require formal modification.

B. The Contractor and its agents shall abide by all ethical requirements that apply to persons who have a business relationship with the State as set forth in IC § 4-2-6, *et seq*., IC § 4-2-7, *et seq*. and the regulations promulgated thereunder. **If the Contractor has knowledge, or would have acquired knowledge with reasonable inquiry, that a state officer, employee, or special state appointee, as those terms are defined in IC § 4-2-6-1, has a financial interest in the Contract, the Contractor shall ensure compliance with the disclosure requirements in IC § 4-2-6-10.5 prior to the execution of this Contract.** If the Contractor is not familiar with these ethical requirements, the Contractor should refer any questions to the Indiana State Ethics Commission, or visit the Inspector General's website at http://www.in.gov/ig/. If the Contractor or its agents violate any applicable ethical standards, the State may, in its sole discretion, terminate this Contract immediately upon notice to the Contractor. In addition, the Contractor may be subject to penalties under IC §§ 4-2-6, 4-2-7, 35-44.1-1-4, and under any other applicable laws.

C. The Contractor certifies by entering into this Contract that neither it nor its principal(s) is presently in arrears in payment of taxes, permit fees or other statutory, regulatory or judicially required payments to the State of Indiana. The Contractor agrees that any payments currently due to the State of Indiana may be withheld from payments due to the Contractor. Additionally, further work or payments may be withheld, delayed, or denied and/or this Contract suspended until the Contractor is current in its payments and has submitted proof of such payment to the State.

D. The Contractor warrants that it has no current, pending or outstanding criminal, civil, or enforcement actions initiated by the State, and agrees that it will immediately notify the State of any such actions. During the term of such actions, the Contractor agrees that the State may delay, withhold, or deny work under any supplement, amendment, change order or other contractual device issued pursuant to this Contract.

E. If a valid dispute exists as to the Contractor's liability or guilt in any action initiated by the State or its agencies, and the State decides to delay, withhold, or deny work to the Contractor, the Contractor may request that it be allowed to continue, or receive work, without delay. The Contractor must submit, in writing, a request for review to the Indiana Department of Administration (IDOA) following the procedures for disputes outlined herein. A determination by IDOA shall be binding on the parties. Any payments that the State may delay, withhold, deny, or apply under this section shall not be subject to penalty or interest, except as permitted by IC § 5-17-5.

F. The Contractor warrants that the Contractor and its subcontractors, if any, shall obtain and maintain all required permits, licenses, registrations, and approvals, and shall comply with all health, safety, and environmental statutes, rules, or regulations in the performance of work activities for the State. Failure to do so may be deemed a material breach of this Contract and grounds for immediate termination and denial of further work with the State.

G. The Contractor affirms that, if it is an entity described in IC Title 23, it is properly registered and owes no outstanding reports to the Indiana Secretary of State.

H. As required by IC § 5-22-3-7:

TEMPLATE

(1) The Contractor and any principals of the Contractor certify that:

(A) the Contractor, except for de minimis and nonsystematic violations, has not violated the terms of:

(i) IC §24-4.7 [Telephone Solicitation Of Consumers];

(ii) IC §24-5-12 [Telephone Solicitations]; or

(iii) IC §24-5-14 [Regulation of Automatic Dialing Machines];

in the previous three hundred sixty-five (365) days, even if IC § 24-4.7 is preempted by federal law; and

(B) the Contractor will not violate the terms of IC § 24-4.7 for the duration of the Contract, even if IC §24-4.7 is preempted by federal law.

(2) The Contractor and any principals of the Contractor certify that an affiliate or principal of the Contractor and any agent acting on behalf of the Contractor or on behalf of an affiliate or principal of the Contractor, except for de minimis and nonsystematic violations,

(A) has not violated the terms of IC § 24-4.7 in the previous three hundred sixty-five (365) days, even if IC §24-4.7 is preempted by federal law; and

(B) will not violate the terms of IC § 24-4.7 for the duration of the Contract, even if IC §24-4.7 is preempted by federal law.

16. Condition of Payment. All services provided by the Contractor under this Contract must be performed to the State's reasonable satisfaction, as determined at the discretion of the undersigned State representative and in accordance with all applicable federal, state, local laws, ordinances, rules and regulations. The State shall not be required to pay for work found to be unsatisfactory, inconsistent with this Contract or performed in violation of and federal, state or local statute, ordinance, rule or regulation.

17. Confidentiality of State Information. The Contractor understands and agrees that data, materials, and information disclosed to the Contractor may contain confidential and protected information. The Contractor covenants that data, material, and information gathered, based upon or disclosed to the Contractor for the purpose of this Contract will not be disclosed to or discussed with third parties without the prior written consent of the State.

The parties acknowledge that the services to be performed by Contractor for the State under this Contract may require or allow access to data, materials, and information containing Social Security numbers maintained by the State in its computer system or other records. In addition to the covenant made above in this section and pursuant to 10 IAC 5-3-1(4), the Contractor and the State agree to comply with the provisions of IC § 4-1-10 and IC § 4-1-11. If any Social Security number(s) is/are disclosed by Contractor, Contractor agrees to pay the cost of the notice of disclosure of a breach of the security of the system in addition to any other claims and expenses for which it is liable under the terms of this contract.

18. Continuity of Services.

A. The Contractor recognizes that the service(s) to be performed under this Contract are vital to the State and must be continued without interruption and that, upon Contract expiration, a successor, either the State or another contractor, may continue them. The Contractor agrees to:

1. Furnish phase-in training; and
2. Exercise its best efforts and cooperation to effect an orderly and efficient transition to a successor.

TEMPLATE

B. The Contractor shall, upon the State's written notice:

1. Furnish phase-in, phase-out services for up to sixty (60) days after this Contract expires; and
2. Negotiate in good faith a plan with a successor to determine the nature and extent of phase-in, phase-out services required. The plan shall specify a training program and a date for transferring responsibilities for each division of work described in the plan, and shall be subject to the State's approval. The Contractor shall provide sufficient experienced personnel during the phase-in, phase-out period to ensure that the services called for by this Contract are maintained at the required level of proficiency.

C. The Contractor shall allow as many personnel as practicable to remain on the job to help the successor maintain the continuity and consistency of the services required by this Contract. The Contractor also shall disclose necessary personnel records and allow the successor to conduct on-site interviews with these employees. If selected employees are agreeable to the change, the Contractor shall release them at a mutually agreeable date and negotiate transfer of their earned fringe benefits to the successor.

D. The Contractor shall be reimbursed for all reasonable phase-in, phase-out costs (i.e., costs incurred within the agreed period after contract expiration that result from phase-in, phase-out operations).

19. Debarment and Suspension.

A. The Contractor certifies by entering into this Contract that neither it nor its principals nor any of its subcontractors are presently debarred, suspended, proposed for debarment, declared ineligible or voluntarily excluded from entering into this Contract by any federal agency or by any department, agency or political subdivision of the State of Indiana. The term "principal" for purposes of this Contract means an officer, director, owner, partner, key employee or other person with primary management or supervisory responsibilities, or a person who has a critical influence on or substantive control over the operations of the Contractor.

B. The Contractor certifies that it has verified the state and federal suspension and debarment status for all subcontractors receiving funds under this Contract and shall be solely responsible for any recoupment, penalties or costs that might arise from use of a suspended or debarred subcontractor. The Contractor shall immediately notify the State if any subcontractor becomes debarred or suspended, and shall, at the State's request, take all steps required by the State to terminate its contractual relationship with the subcontractor for work to be performed under this Contract.

20. Default by State. If the State, sixty (60) days after receipt of written notice, fails to correct or cure any material breach of this Contract, the Contractor may cancel and terminate this Contract and institute measures to collect monies due up to and including the date of termination.

21. Disputes.

A. Should any disputes arise with respect to this Contract, the Contractor and the State agree to act immediately to resolve such disputes. Time is of the essence in the resolution of disputes.

B. The Contractor agrees that, the existence of a dispute notwithstanding, it will continue without delay to carry out all of its responsibilities under this Contract that are not affected by the dispute. Should the Contractor fail to continue to perform its responsibilities regarding all non-disputed work, without delay,

TEMPLATE

any additional costs incurred by the State or the Contractor as a result of such failure to proceed shall be borne by the Contractor, and the Contractor shall make no claim against the State for such costs.

C. If the parties are unable to resolve a contract dispute between them after good faith attempts to do so, a dissatisfied party shall submit the dispute to the Commissioner of the Indiana Department of Administration for resolution. The dissatisfied party shall give written notice to the Commissioner and the other party. The notice shall include: (1) a description of the disputed issues, (2) the efforts made to resolve the dispute, and (3) a proposed resolution. The Commissioner shall promptly issue a Notice setting out documents and materials to be submitted to the Commissioner in order to resolve the dispute; the Notice may also afford the parties the opportunity to make presentations and enter into further negotiations. Within thirty (30) business days of the conclusion of the final presentations, the Commissioner shall issue a written decision and furnish it to both parties. The Commissioner's decision shall be the final and conclusive administrative decision unless either party serves on the Commissioner and the other party, within ten (10) business days after receipt of the Commissioner's decision, a written request for reconsideration and modification of the written decision. If the Commissioner does not modify the written decision within thirty (30) business days, either party may take such other action helpful to resolving the dispute, including submitting the dispute to an Indiana court of competent jurisdiction. If the parties accept the Commissioner's decision, it may be memorialized as a written Amendment to this Contract if appropriate.

D. The State may withhold payments on disputed items pending resolution of the dispute. The unintentional nonpayment by the State to the Contractor of one or more invoices not in dispute in accordance with the terms of this Contract will not be cause for the Contractor to terminate this Contract, and the Contractor may bring suit to collect these amounts without following the disputes procedure contained herein.

E. With the written approval of the Commissioner of the Indiana Department of Administration, the parties may agree to forego the process described in subdivision C. relating to submission of the dispute to the Commissioner.

F. This paragraph shall not be construed to abrogate provisions of IC § 4-6-2-11 in situations where dispute resolution efforts lead to a compromise of claims in favor of the State as described in that statute. In particular, releases or settlement agreements involving releases of legal claims or potential legal claims of the state should be processed consistent with IC § 4-6-2-11, which requires approval of the Governor and Attorney General.

22. Drug-Free Workplace Certification. As required by Executive Order No. 90-5 dated April 12, 1990, issued by the Governor of Indiana, the Contractor hereby covenants and agrees to make a good faith effort to provide and maintain a drug-free workplace. The Contractor will give written notice to the State within ten (10) days after receiving actual notice that the Contractor, or an employee of the Contractor in the State of Indiana, has been convicted of a criminal drug violation occurring in the workplace. False certification or violation of this certification may result in sanctions including, but not limited to, suspension of contract payments, termination of this Contract and/or debarment of contracting opportunities with the State for up to three (3) years.

In addition to the provisions of the above paragraph, if the total amount set forth in this Contract is in excess of $25,000.00, the Contractor certifies and agrees that it will provide a drug-free workplace by:

A. Publishing and providing to all of its employees a statement notifying them that the unlawful manufacture, distribution, dispensing, possession or use of a controlled substance

TEMPLATE

is prohibited in the Contractor's workplace, and specifying the actions that will be taken against employees for violations of such prohibition;

B. Establishing a drug-free awareness program to inform its employees of (1) the dangers of drug abuse in the workplace; (2) the Contractor's policy of maintaining a drug-free workplace; (3) any available drug counseling, rehabilitation and employee assistance programs; and (4) the penalties that may be imposed upon an employee for drug abuse violations occurring in the workplace;

C. Notifying all employees in the statement required by subparagraph (A) above that as a condition of continued employment, the employee will (1) abide by the terms of the statement; and (2) notify the Contractor of any criminal drug statute conviction for a violation occurring in the workplace no later than five (5) days after such conviction;

D. Notifying the State in writing within ten (10) days after receiving notice from an employee under subdivision (C)(2) above, or otherwise receiving actual notice of such conviction;

E. Within thirty (30) days after receiving notice under subdivision (C)(2) above of a conviction, imposing the following sanctions or remedial measures on any employee who is convicted of drug abuse violations occurring in the workplace: (1) taking appropriate personnel action against the employee, up to and including termination; or (2) requiring such employee to satisfactorily participate in a drug abuse assistance or rehabilitation program approved for such purposes by a federal, state or local health, law enforcement, or other appropriate agency; and

F. Making a good faith effort to maintain a drug-free workplace through the implementation of subparagraphs (A) through (E) above.

23. Employment Eligibility Verification As required by IC § 22-5-1.7, the Contractor swears or affirms under the penalties of perjury that the Contractor does not knowingly employ an unauthorized alien. The Contractor further agrees that:

A. The Contractor shall enroll in and verify the work eligibility status of all his/her/its newly hired employees through the E-Verify program as defined in IC § 22-5-1.7-3. The Contractor is not required to participate should the E-Verify program cease to exist. Additionally, the Contractor is not required to participate if the Contractor is self-employed and does not employ any employees.

B. The Contractor shall not knowingly employ or contract with an unauthorized alien. The Contractor shall not retain an employee or contract with a person that the Contractor subsequently learns is an unauthorized alien.

C. The Contractor shall require his/her/its subcontractors, who perform work under this Contract, to certify to the Contractor that the subcontractor does not knowingly employ or contract with an unauthorized alien and that the subcontractor has enrolled and is participating in the E-Verify program. The Contractor agrees to maintain this certification throughout the duration of the term of a contract with a subcontractor.

The State may terminate for default if the Contractor fails to cure a breach of this provision no later than thirty (30) days after being notified by the State.

TEMPLATE

24. Employment Option. If the State determines that it would be in the State's best interest to hire an employee of the Contractor, the Contractor will release the selected employee from any non-competition agreements that may be in effect. This release will be at no cost to the State or the employee.

25. Force Majeure. In the event that either party is unable to perform any of its obligations under this Contract or to enjoy any of its benefits because of natural disaster or decrees of governmental bodies not the fault of the affected party (hereinafter referred to as a "Force Majeure Event"), the party who has been so affected shall immediately give notice to the other party and shall do everything possible to resume performance. Upon receipt of such notice, all obligations under this Contract shall be immediately suspended. If the period of nonperformance exceeds thirty (30) days from the receipt of notice of the Force Majeure Event, the party whose ability to perform has not been so affected may, by giving written notice, terminate this Contract.

26. Funding Cancellation. As required by Financial Management Circular 3.3 and IC § 5-22-17-5, when the Director of the State Budget Agency makes a written determination that funds are not appropriated or otherwise available to support continuation of performance of this Contract, this Contract shall be canceled. A determination by the Director of State Budget Agency that funds are not appropriated or otherwise available to support continuation of performance shall be final and conclusive.

27. Governing Law. This Contract shall be governed, construed, and enforced in accordance with the laws of the State of Indiana, without regard to its conflict of laws rules. Suit, if any, must be brought in the State of Indiana.

28. HIPAA Compliance. If this Contract involves services, activities or products subject to the Health Insurance Portability and Accountability Act of 1996 (HIPAA), the Contractor covenants that it will appropriately safeguard Protected Health Information (defined in 45 CFR 160.103), and agrees that it is subject to, and shall comply with, the provisions of 45 CFR 164 Subpart E regarding use and disclosure of Protected Health Information.

29. Indemnification. The Contractor agrees to indemnify, defend, and hold harmless the State, its agents, officials, and employees from all claims and suits including court costs, attorney's fees, and other expenses caused by any act or omission of the Contractor and/or its subcontractors, if any, in the performance of this Contract. The State shall **not** provide such indemnification to the Contractor.

30. Independent Contractor; Workers' Compensation Insurance. The Contractor is performing as an independent entity under this Contract. No part of this Contract shall be construed to represent the creation of an employment, agency, partnership or joint venture agreement between the parties. Neither party will assume liability for any injury (including death) to any persons, or damage to any property, arising out of the acts or omissions of the agents, employees or subcontractors of the other party. The Contractor shall provide all necessary unemployment and workers' compensation insurance for the Contractor's employees, and Contractor shall provide the State with a Certificate of Insurance evidencing such coverage prior to starting work under this Contract.

31. Indiana Veteran Owned Small Business Enterprise Compliance. Award of this Contract was based, in part, on the Indiana Veteran Owned Small Business Enterprise ("IVOSB") participation plan, as detailed in the IVOSB Subcontractor Commitment Form, commonly referred to as "Attachment A-1" in the procurement documentation and incorporated by reference herein. Therefore, any changes to this information during the Contract term must be approved by IDOA's Division of Supplier Diversity and may require an amendment. It is the State's expectation that the Contractor will meet the subcontractor

TEMPLATE

commitments during the Contract term. The following certified IVOSB subcontractor(s) will be participating in this Contract: **[Add additional IVOSBs using the same format.]**

IVOSB	COMPANY NAME	PHONE	EMAIL OF CONTACT PERSON	PERCENT

Briefly describe the IVOSB service(s)/product(s) to be provided under this Contract and include the estimated date(s) for utilization during the Contract term:

_____

_____

A copy of each subcontractor agreement must be submitted to the Division of Supplier Diversity within thirty (30) days of the effective date of this Contract. The subcontractor agreements may be uploaded into Pay Audit (Indiana's subcontractor payment auditing system), emailed to IndianaVeteransPreference@idoa.IN.gov, or mailed to IDOA, 402 W. Washington Street, Room W-462, Indianapolis, IN 46204. Failure to provide a copy of any subcontractor agreement may be deemed a violation of the rules governing IVOSB procurement and may result in sanctions allowable under 25 IAC 9-5-2. Requests for changes must be submitted to IndianaVeteransPreference@idoa.IN.gov for review and approval before changing the participation plan submitted in connection with this Contract.

The Contractor shall report payments made to certified IVOSB subcontractors under this Contract on a monthly basis using Pay Audit. The Contractor shall notify subcontractors that they must confirm payments received from the Contractor in Pay Audit. The Pay Audit system can be accessed on the IDOA webpage at: www.in.gov/idoa/mwbe/payaudit.htm. The Contractor may also be required to report IVOSB certified subcontractor payments directly to the Division of Supplier Diversity, as reasonably requested and in the format required by the Division of Supplier Diversity.

The Contractor's failure to comply with the provisions in this clause may be considered a material breach of the Contract.

32. Information Technology Enterprise Architecture Requirements. If this Contract involves information technology-related products or services, the Contractor agrees that all such products or services are compatible with any of the technology standards found at https://www.in.gov/iot/2394.htm that are applicable, including the assistive technology standard. The State may terminate this Contract for default if the terms of this paragraph are breached.

33. Insurance

A. The Contractor and their subcontractors (if any) shall secure and keep in force during the term of this Contract the following insurance coverages (if applicable) covering the Contractor for any and all claims of any nature which may in any manner arise out of or result from Contractor's performance under this Contract. The required limits of liability can be obtained with a combination of primary and excess liability policies.

1. Commercial general liability, including contractual coverage, and products or completed operations coverage (if applicable), with minimum liability limits not less than $700,000 per person and $5,000,000 per occurrence unless additional

TEMPLATE

coverage is required by the State. The State is to be named as an additional insured on a primary, non-contributory basis for any liability arising directly or indirectly under or in connection with this Contract.

2. Automobile liability for owned, non-owned and hired autos with minimum liability limits of $700,000 per person and $5,000,000 per occurrence. The State is to be named as an additional insured on a primary, non-contributory basis.

3. The Contractor shall secure the appropriate Surety or Fidelity Bond(s) as required by the state department served or by applicable statute.

4. The Contractor and their subcontractors shall provide proof of such insurance coverage by tendering to the undersigned State representative a certificate of insurance prior to the commencement of this Contract and proof of workers' compensation coverage meeting all statutory requirements of IC §22-3-2. In addition, proof of an "all states endorsement" covering claims occurring outside the State is required if any of the services provided under this Contract involve work outside of Indiana.

B. The Contractor's insurance coverage must meet the following additional requirements:

1. The insurer must have a certificate of authority or other appropriate authorization to operate in the state in which the policy was issued.

2. Any deductible or self-insured retention amount or other similar obligation under the insurance policies shall be the sole obligation of the Contractor.

3. The State will be defended, indemnified and held harmless to the full extent of any coverage actually secured by the Contractor in excess of the minimum requirements set forth above. The duty to indemnify the State under this Contract shall not be limited by the insurance required in this Contract.

4. The insurance required in this Contract, through a policy or endorsement(s), shall include a provision that the policy and endorsements may not be canceled or modified without thirty (30) days' prior written notice to the undersigned State agency.

5. The Contractor waives and agrees to require their insurer to waive their rights of subrogation against the State of Indiana.

C. Failure to provide insurance as required in this Contract may be deemed a material breach of contract entitling the State to immediately terminate this Contract. The Contractor shall furnish a certificate of insurance and all endorsements to the State before the commencement of this Contract.

34. Key Person(s).

A. If both parties have designated that certain individual(s) are essential to the services offered, the parties agree that should such individual(s) leave their employment during the term of this Contract for whatever reason, the State shall have the right to terminate this Contract upon thirty (30) days' prior written notice.

TEMPLATE

B. In the event that the Contractor is an individual, that individual shall be considered a key person and, as such, essential to this Contract. Substitution of another for the Contractor shall not be permitted without express written consent of the State.

Nothing in Sections A and B, above shall be construed to prevent the Contractor from using the services of others to perform tasks ancillary to those tasks which directly require the expertise of the key person. Examples of such ancillary tasks include secretarial, clerical, and common labor duties. The Contractor shall, at all times, remain responsible for the performance of all necessary tasks, whether performed by a key person or others.

Key person(s) to this Contract is/are:

35. Merger & Modification. This Contract constitutes the entire agreement between the parties. No understandings, agreements, or representations, oral or written, not specified within this Contract will be valid provisions of this Contract. This Contract may not be modified, supplemented, or amended, except by written agreement signed by all necessary parties.

36. Minority and Women's Business Enterprises Compliance. Award of this Contract was based, in part, on the Minority and/or Women's Business Enterprise ("MBE" and/or "WBE") participation plan as detailed in the Minority and Women's Business Enterprises Subcontractor Commitment Form, commonly referred to as "Attachment A" in the procurement documentation and incorporated by reference herein**.** Therefore, any changes to this information during the Contract term must be approved by the Division of Supplier Diversity and may require an amendment. It is the State's expectation that the Contractor will meet the subcontractor commitments during the Contract term.

The following Division of Supplier Diversity certified MBE and/or WBE subcontractors will be participating in this Contract: **[Add additional MBEs and WBEs using the same format.]**

MBE or WBE	COMPANY NAME	PHONE	EMAIL OF CONTACT PERSON	PERCENT

Briefly describe the MBE and/or WBE service(s)/product(s) to be provided under this Contract and include the estimated date(s) for utilization during the Contract term:

_____

_____

A copy of each subcontractor agreement must be submitted to the Division of Supplier Diversity within thirty (30) days of the effective date of this Contract. The subcontractor agreements may be uploaded into Pay Audit (Indiana's subcontractor payment auditing system), emailed to MWBECompliance@idoa.IN.gov, or mailed to Division of Supplier Diversity, 402 W. Washington Street, Indianapolis IN 46204. Failure to provide a copy of any subcontractor agreement may be deemed a violation of the rules governing MBE/WBE procurement and may result in sanctions allowable under 25 IAC 5-7-8. Requests for changes must be submitted to MWBECompliance@idoa.IN.gov for review and approval before changing the participation plan submitted in connection with this Contract.

The Contractor shall report payments made to Division of Supplier Diversity certified subcontractors under this Contract on a monthly basis using Pay Audit. The Contractor shall notify subcontractors that

TEMPLATE

they must confirm payments received from the Contractor in Pay Audit. The Pay Audit system can be accessed on the IDOA webpage at: www.in.gov/idoa/mwbe/payaudit.htm. The Contractor may also be required to report Division of Supplier Diversity certified subcontractor payments directly to the Division of Supplier Diversity, as reasonably requested and in the format required by the Division of Supplier Diversity.

The Contractor's failure to comply with the provisions in this clause may be considered a material breach of the Contract.

37. Nondiscrimination. Pursuant to the Indiana Civil Rights Law, specifically including IC § 22-9-1-10, and in keeping with the purposes of the federal Civil Rights Act of 1964, the Age Discrimination in Employment Act, and the Americans with Disabilities Act, the Contractor covenants that it shall not discriminate against any employee or applicant for employment relating to this Contract with respect to the hire, tenure, terms, conditions or privileges of employment or any matter directly or indirectly related to employment, because of the employee's or applicant's race, color, national origin, religion, sex, age, disability, ancestry, status as a veteran, or any other characteristic protected by federal, state, or local law ("Protected Characteristics"). Contractor certifies compliance with applicable federal laws, regulations, and executive orders prohibiting discrimination based on the Protected Characteristics in the provision of services. Breach of this paragraph may be regarded as a material breach of this Contract, but nothing in this paragraph shall be construed to imply or establish an employment relationship between the State and any applicant or employee of the Contractor or any subcontractor.

The State is a recipient of federal funds, and therefore, where applicable, Contractor and any subcontractors shall comply with requisite affirmative action requirements, including reporting, pursuant to 41 CFR Chapter 60, as amended, and Section 202 of Executive Order 11246 as amended by Executive Order 13672.

38. Notice to Parties. Whenever any notice, statement or other communication is required under this Contract, it will be sent by E-mail or first-class U.S. mail service to the following addresses, unless otherwise specifically advised. Such notice, statement or other communication shall include the Public Works Project Number in the subject line of the E-mail and the body of the notice or other communication.

A. Notices to the State shall be sent to:

Public Works Division, Director
Indiana Department of Administration
402 W Washington St Room W462
Indianapolis, IN 46204
E-mail: rgrossman@idoa.IN.gov

B. Notices to the Contractor shall be sent to:

[INSERT CONTRACTOR NAME]
[INSERT CONTRACTOR'S ADDRESS]
E-mail: _____

As required by IC § 4-13-2-14.8, payments to the Contractor shall be made via electronic funds transfer in accordance with instructions filed by the Contractor with the Indiana Auditor of State.

39. Order of Precedence; Incorporation by Reference. Any inconsistency or ambiguity in this Contract shall be resolved by giving precedence in the following order: (1) this Contract, (2) the Project Bid Package, (3) attachments prepared by the State; (4) Contractor's Proposal; and (5) attachments prepared by the

TEMPLATE

Contractor. All of the foregoing are incorporated fully by reference. All attachments, and all documents referred to in this paragraph are hereby incorporated fully by reference.

40. Ownership of Documents and Materials.

A. All documents, records, programs, applications, data, algorithms, film, tape, articles, memoranda, and other materials (the "Materials") not developed or licensed by the Contractor prior to execution of this Contract, but specifically developed under this Contract shall be considered "work for hire" and the Contractor hereby transfers and assigns any ownership claims to the State so that all Materials will be the property of the State. If ownership interest in the Materials cannot be assigned to the State, the Contractor grants the State a non-exclusive, non-cancelable, perpetual, worldwide royalty-free license to use the Materials and to use, modify, copy and create derivative works of the Materials.

B. Use of the Materials, other than related to contract performance by the Contractor, without the prior written consent of the State, is prohibited. During the performance of this Contract, the Contractor shall be responsible for any loss of or damage to the Materials developed for or supplied by the State and used to develop or assist in the services provided while the Materials are in the possession of the Contractor. Any loss or damage thereto shall be restored at the Contractor's expense. The Contractor shall provide the State full, immediate, and unrestricted access to the Materials and to Contractor's work product during the term of this Contract.

41. Payments.

A. All payments shall be made thirty five (35) days in arrears in conformance with State fiscal policies and procedures and, as required by IC §4-13-2-14.8, the direct deposit by electronic funds transfer to the financial institution designated by the Contractor in writing unless a specific waiver has been obtained from the Indiana Auditor of State. No payments will be made in advance of receipt of the goods or services that are the subject of this Contract except as permitted by IC § 4-13-2-20.

B. If the Contractor is being paid in advance for the maintenance of equipment, software or a service as a subscription, then pursuant to IC § 4-13-2-20(b)(14), the Contractor agrees that if it fails to fully provide or perform under this Contract, upon receipt of written notice from the State, it shall promptly refund the consideration paid, pro-rated through the date of non-performance.

42. Penalties/Interest/Attorney's Fees. The State will in good faith perform its required obligations hereunder and does not agree to pay any penalties, liquidated damages, interest or attorney's fees, except as permitted by Indiana law, in part, IC § 5-17-5, IC § 34-54-8, IC § 34-13-1 and IC § 34-52-2.

Notwithstanding the provisions contained in IC § 5-17-5, any liability resulting from the State's failure to make prompt payment shall be based solely on the amount of funding originating from the State and shall not be based on funding from federal or other sources.

43. Progress Reports. The Contractor shall submit progress reports to the State upon request. The report shall be oral, unless the State, upon receipt of the oral report, should deem it necessary to have it in written form. The progress reports shall serve the purpose of assuring the State that work is progressing in line with the schedule, and that completion can be reasonably assured on the scheduled date.

44. Public Record.
The Contractor acknowledges that the State will not treat this Contract as containing confidential information, and the State will post this Contract on the transparency portal as required by Executive

TEMPLATE

Order 05-07 and IC § 5-14-3.5-2. Use by the public of the information contained in this Contract shall not be considered an act of the State.

45. Renewal Option. This Contract may be renewed under the same terms and conditions, subject to the approval of the Commissioner of the Department of Administration and the State Budget Director in compliance with IC § 5-22-17-4. The term of the renewed contract may not be longer than the term of the original contract.

46. Severability. The invalidity of any section, subsection, clause or provision of this Contract shall not affect the validity of the remaining sections, subsections, clauses or provisions of this Contract.

47. Substantial Performance. This Contract shall be deemed to be substantially performed only when fully performed according to its terms and conditions and any written amendments or supplements.

48. Taxes. The State is exempt from most state and local taxes and many federal taxes. The State will not be responsible for any taxes levied on the Contractor as a result of this Contract.

49. Termination for Convenience. This Contract may be terminated, in whole or in part, by the State, which shall include and is not limited to the Indiana Department of Administration and the State Budget Agency whenever, for any reason, the State determines that such termination is in its best interest. Termination of services shall be effected by delivery to the Contractor of a Termination Notice at least thirty (30) days prior to the termination effective date, specifying the extent to which performance of services under such termination becomes effective. The Contractor shall be compensated for services properly rendered prior to the effective date of termination. The State will not be liable for services performed after the effective date of termination. The Contractor shall be compensated for services herein provided but in no case shall total payment made to the Contractor exceed the original contract price or shall any price increase be allowed on individual line items if canceled only in part prior to the original termination date. For the purposes of this paragraph, the parties stipulate and agree that the Indiana Department of Administration shall be deemed to be a party to this agreement with authority to terminate the same for convenience when such termination is determined by the Commissioner of IDOA to be in the best interests of the State.

50. Termination for Default.

A. With the provision of thirty (30) days' notice to the Contractor, the State may terminate this Contract in whole or in part if the Contractor fails to:

1. Correct or cure any breach of this Contract; the time to correct or cure the breach may be extended beyond thirty (30) days if the State determines progress is being made and the extension is agreed to by the parties;
2. Deliver the supplies or perform the services within the time specified in this Contract or any extension;
3. Make progress so as to endanger performance of this Contract; or
4. Perform any of the other provisions of this Contract.

B. If the State terminates this Contract in whole or in part, it may acquire, under the terms and in the manner the State considers appropriate, supplies or services similar to those terminated, and the Contractor will be liable to the State for any excess costs for those supplies or services. However, the Contractor shall continue the work not terminated.

TEMPLATE

C. The State shall pay the contract price for completed supplies delivered and services accepted. The Contractor and the State shall agree on the amount of payment for manufacturing materials delivered and accepted and for the protection and preservation of the property. Failure to agree will be a dispute under the Disputes clause. The State may withhold from these amounts any sum the State determines to be necessary to protect the State against loss because of outstanding liens or claims of former lien holders.

D. The rights and remedies of the State in this clause are in addition to any other rights and remedies provided by law or equity or under this Contract.

51. Travel. No expenses for travel will be reimbursed unless specifically authorized by this Contract. Permitted expenses will be reimbursed at the rate paid by the State and in accordance with the *Indiana Department of Administration's Travel Policies and Procedures* in effect at the time the expenditure is made. Out-of-state travel requests must be reviewed by the State for availability of funds and for conformance with *Travel Policy* guidelines.

52. Waiver of Rights. No right conferred on either party under this Contract shall be deemed waived, and no breach of this Contract excused, unless such waiver is in writing and signed by the party claimed to have waived such right. Neither the State's review, approval or acceptance of, nor payment for, the services required under this Contract shall be construed to operate as a waiver of any rights under this Contract or of any cause of action arising out of the performance of this Contract, and the Contractor shall be and remain liable to the State in accordance with applicable law for all damages to the State caused by the Contractor's negligent performance of any of the services furnished under this Contract.

53. Work Standards. The Contractor shall execute its responsibilities by following and applying at all times the highest professional and technical guidelines and standards. If the State becomes dissatisfied with the work product of or the working relationship with those individuals assigned to work on this Contract, the State may request in writing the replacement of any or all such individuals, and the Contractor shall grant such request.

THE REMAINDER OF THIS PAGE HAS BEEN INTENTIONALLY LEFT BLANK.

TEMPLATE

Non-Collusion and Acceptance

The undersigned attests, subject to the penalties for perjury, that the undersigned is the Contractor, or that the undersigned is the properly authorized representative, agent, member or officer of the Contractor. Further, to the undersigned's knowledge, neither the undersigned nor any other member, employee, representative, agent or officer of the Contractor, directly or indirectly, has entered into or been offered any sum of money or other consideration for the execution of this Contract other than that which appears upon the face hereof. **Furthermore, if the undersigned has knowledge that a state officer, employee, or special state appointee, as those terms are defined in IC 4-2-6-1, has a financial interest in the Contract, the Contractor attests to compliance with the disclosure requirements in IC 4-2-6-10.5.**

Agreement to Use Electronic Signatures

I agree, and it is my intent, to sign this Contract by accessing State of Indiana Supplier Portal using the secure password assigned to me and by electronically submitting this Contract to the State of Indiana. I understand that my signing and submitting this Contract in this fashion is the legal equivalent of having placed my handwritten signature on the submitted Contract and this affirmation. I understand and agree that by electronically signing and submitting this Contract in this fashion I am affirming to the truth of the information contained herein. I understand that this Contract will not become binding on the State until it has been approved by the Department of Administration, the State Budget Agency, and the Office of the Attorney General, which approvals will be posted on the Active Contracts Database: https://secure.in.gov/apps/idoa/contractsearch/

IN WITNESS WHEREOF, the Contractor and the State have, through their duly authorized representatives, entered into this Contract for Public Works Project Number **XXXXX**. The parties, having read and understood the foregoing terms of this Contract, do by their respective signatures dated below agree to the terms thereof.

Contractor: XXXXXXXXXX

By: _____
Printed Name: _____
Title: _____

Date: _____

Department of Administration
Public Works Division

By: _____
Robert Grossman, Director
For IDOA Commissioner if less than $10,000,000

Date: _____

Approved by:
Department of Administration

By: _____(for)
Rebecca Holwerda, Commissioner

Date: _____

Approved by:
State Budget Agency

By: _____ (for)
Zachary Q. Jackson, Director

Date: _____

TEMPLATE

Approved as to Form and Legality:
Form approval has been granted by the Office of the Attorney General pursuant to IC 4-13-2-14.3(e) on October 5, 2022.
FA 22-49

This document prepared and reviewed by:

_____
Counsel, Indiana Department of Administration

TEMPLATE

STATE OF INDIANA'S
PUBLIC WORKS CONSTRUCTION CONTRACT
CHANGE ORDER/AMENDMENT #_
Contract # _____

THIS IS AMENDMENT #_ to the Public Works Construction Contract ("Contract") entered into by and between the Indiana Department of Administration's Public Works Division ("State") and **XXXXXXXXXX** ("Contractor"), executed pursuant to the terms and conditions set forth herein, governed by Indiana Code 4-13.6, *et seq*. and approved by the last State signatory on _____.

In consideration of the mutual undertakings and covenants hereinafter set forth, the parties agree to amend the Contract as follows:

1. A written change has been requested by the Contractor, as detailed in **Amendment #_ Exhibit A,** attached hereto and incorporated herein, in connection with the following Public Works Project:

Project Number:	**XXXXXXXXX**
Project Name:	**XXXXXXXXX**
Designer (if applicable):	**XXXXXXXXX**
Purchase Order Number:	**XXXXXXXXX**
Institution Department:	**XXXXXXXXX**
Req. No:	**XXXXXXXXX**
Change Order No:	**XXXXXXXXX**

2. [ ] The Designer has recommended the Contractor's change in writing, as evidenced by **Amendment #_ Exhibit _**, attached hereto and incorporated herein.
   [ ] No Designer has been contracted for this Project.

3. The State has approved the change request, as detailed in **Amendment #_ Exhibit B**, attached hereto and incorporated herein.

4. The consideration for this Amendment #_ is as follows:

ORIGINAL CONTRACT VALUE	$_____
TOTAL PREVIOUS AMENDMENT VALUE	$_____
PRE-AMENDMENT CONTRACT TOTAL	$_____
[ ] INCREASE/[ ] DECREASE THIS AMENDMENT	$_____
[ ] INCREASE/[ ] DECREASE REMEDIATION ALLOWANCE	$_____
NEW CONTRACT TOTAL REMUNERATION	$_____

This change represents a **$XX,XXX** [ ] increase/[ ] decrease in the original contract and a $**XX,XXX** [ ] increase/ [ ] decrease in remediation allowance, for a total [ ] increase/[ ] decrease of $**XX,XXX**.

Retainage [ ] will/ [ ] will not be withheld on this change order amount.

5. The term of this Contract is hereby [ ] extended for an additional **XXX** days.
   [ ] decreased by **XXX** days.
   [ ] remains the same.
   Therefore, the Contract shall terminate on _____.

6. **A. Minority and Women's Business Enterprises Compliance.** ***Include one of the options, as applicable; delete the inapplicable option.***

TEMPLATE

***OPTION 1*-to be used if the MBE and/or WBE subcontractor(s) will continue to be utilized during the extension period.**

As required by 25 IAC 5-6-2(b), the following Division of Supplier Diversity certified MBE or WBE subcontractor(s) will be participating in this Contract under this Change Order/Amendment. This participation represents [ ] the same percentage or [ ] an increase of ___ % above the original MBE and/or WBE commitment. **[Add additional MBEs and WBEs using the same format.]**

MBE or WBE	COMPANY NAME	PHONE	EMAIL OF CONTACT PERSON	PERCENT

Briefly describe the MBE and/or WBE service(s)/product(s) to be provided under this Amendment and include the estimated date(s) for utilization during the extension period:

_____

_____

A copy of each subcontractor agreement must be submitted to the Division of Supplier Diversity within thirty (30) days of the effective date of this Amendment. The subcontractor agreements may be uploaded into Pay Audit (Indiana's subcontractor payment auditing system), emailed to MWBECompliance@idoa.IN.gov, or mailed to Division of Supplier Diversity, 402 W. Washington Street, RoomW-462, Indianapolis IN 46204. Failure to provide a copy of any subcontractor agreement may be deemed a violation of the rules governing MBE/WBE procurement and may result in sanctions allowable under 25 IAC 5-7-8. Requests for changes must be submitted to MWBECompliance@idoa.IN.gov for review and approval before changing the participation plan submitted in connection with this Amendment.

The Contractor shall report payments made to Division of Supplier Diversity certified subcontractors under this Contract on a monthly basis using Pay Audit. The Contractor shall notify subcontractors that they must confirm payments received from Contractor in Pay Audit. The Pay Audit system can be accessed on the IDOA webpage at: www.in.gov/idoa/mwbe/payaudit.htm. Contractor may also be required to report Division of Supplier Diversity certified subcontractor payments directly to the Division of Supplier Diversity, as reasonably requested and in the format required by the Division of Supplier Diversity.

Contractor's failure to comply with the provisions in this clause may be considered a material breach of the Contract.

***OPTION 2* – to be used if the original Contract identified subcontractors in this clause, but the Contractor will not be utilizing the MBE and WBE subcontractors during the extension period.**

No certified MBE or WBE subcontractors will be participating in this Contract under this Change Order/Amendment.

B. Indiana Veteran Owned Small Business Enterprises Compliance. ***Include one of the options, as applicable; delete the inapplicable option.***

***OPTION 1*-to be used if the IVOSB subcontractor(s) will continue to be utilized during the extension period.**

As required by 25 IAC 9-4-1(b), the following certified IVOSB subcontractors will be participating in this Contract under this Change Order/Amendment. This participation represents [ ] the same percentage or [ ] an increase of ___ % above the original IVOSB commitment. **[Add additional IVOSBs using the same format.]**

IVOSB	COMPANY NAME	PHONE	EMAIL OF CONTACT PERSON	PERCENT

TEMPLATE

_____

Briefly describe the IVOSB service(s)/product(s) to be provided under this Amendment and include the estimated date(s) for utilization during the extension period:

_____

_____

A copy of each subcontractor agreement must be submitted to IDOA's Division of Supplier Diversity within thirty (30) days of the effective date of this Amendment. The subcontractor agreements may be uploaded into Pay Audit (Indiana's subcontractor payment auditing system), emailed to IndianaVeteransPreference@idoa.IN.gov, or mailed to IDOA, 402 W. Washington Street, Room W-462, Indianapolis, IN 46204. Failure to provide a copy of any subcontractor agreement may be deemed a violation of the rules governing IVOSB procurement and may result in sanctions allowable under 25 IAC 9-5-2. Requests for changes must be submitted to IndianaVeteransPreference@idoa.IN.gov for review and approval before changing the participation plan submitted in connection with this Amendment.

The Contractor shall report payments made to certified IVOSB subcontractors under this Contract on a monthly basis using Pay Audit. The Contractor shall notify subcontractors that they must confirm payments received from Contractor in Pay Audit. The Pay Audit system can be accessed on the IDOA webpage at: www.in.gov/idoa/mwbe/payaudit.htm. The Contractor may also be required to report IVOSB certified subcontractor payments directly to the Division of Supplier Diversity, as reasonably requested and in the format required by the Division of Supplier Diversity.

The Contractor's failure to comply with the provisions in this clause may be considered a material breach of the Contract.

***OPTION 2* – to be used if the original Contract identified subcontractors in this clause, but the Contractor will not be utilizing the IVOSB subcontractors during the extension period.**

No certified IVOSB subcontractors will be participating in this Contract under this Change Order/Amendment.

_____

All matters set forth in the original Contract and not affected by this Amendment shall remain in full force and effect.

TEMPLATE

Non-Collusion and Acceptance

The undersigned attests, subject to the penalties for perjury, that the undersigned is the Contractor, or that the undersigned is the properly authorized representative, agent, member or officer of the Contractor. Further, to the undersigned's knowledge, neither the undersigned nor any other member, employee, representative, agent or officer of the Contractor, directly or indirectly, has entered into or been offered any sum of money or other consideration for the execution of this Amendment other than that which appears upon the face hereof. **Furthermore, if the undersigned has knowledge that a state officer, employee, or special state appointee, as those terms are defined in IC 4-2-6-1, has a financial interest in the Contract, the Contractor attests to compliance with the disclosure requirements in IC 4-2-6-10.5.**

Agreement to Use Electronic Signatures

I agree, and it is my intent, to sign this Contract by accessing State of Indiana Supplier Portal using the secure password assigned to me and by electronically submitting this Contract to the State of Indiana. I understand that my signing and submitting this Contract in this fashion is the legal equivalent of having placed my handwritten signature on the submitted Contract and this affirmation. I understand and agree that by electronically signing and submitting this Contract in this fashion I am affirming to the truth of the information contained therein. I understand that this Contract will not become binding on the State until it has been approved by the Department of Administration, the State Budget Agency, and the Office of the Attorney General, which approvals will be posted on the Active Contracts Database: https://secure.in.gov/apps/idoa/contractsearch/

In Witness Whereof, the Contractor and the State have, through their duly authorized representatives, entered into this Amendment for Public Works Project Number **XXXXX**. The parties, having read and understood the foregoing terms of this Amendment, do by their respective signatures dated below agree to the terms thereof.

Contractor: XXXXXXXXXX

By: _____
Printed Name: _____
Title: _____

Date: _____

Department of Administration
Public Works Division

By: _____
Robert Grossman, Director
For IDOA Commissioner if less than $10,000,000

Date: _____

Approved by:
Department of Administration

By: _____ (for)
Rebecca Holwerda, Commissioner

Date: _____

Approved by:
State Budget Agency *PURSUANT TO IC 4-13-2-14.1 APPROVAL OF THE BUDGET AGENCY IS NOT REQUIRED FOR CONTRACTS UNDER $100,000.00*

By: _____ (for)
Zachary Q. Jackson, Director

Date: _____

Approved as to Form and Legality:
Form approval has been granted by the Office of the Attorney General pursuant to IC 4-13-2-14.3(e) on October 5, 2022.
FA 22-48

TEMPLATE

This document prepared and reviewed by:

_____
Counsel, Indiana Department of Administration

TEMPLATE

CONSTRUCTION CONTRACT CHANGE ORDER/AMENDMENT #_

AMENDMENT #_ EXHIBIT A

See Documents to Follow for Exhibit

TEMPLATE

CONSTRUCTION CONTRACT CHANGE ORDER/AMENDMENT #_

AMENDMENT #_ EXHIBIT B

See Documents to Follow for Exhibit

TEMPLATE

CERTIFICATE OF SUBSTANTIAL COMPLETION

State Form 1084 (R / 10-22) / DAPW 5

INDIANA PUBLIC WORKS PROJECT NUMBER:_____

PROJECT NAME:_____

TO: Department of Administration
State of Indiana

THROUGH: Director Public Works

DESIGNER: _____

CONTRACTOR: _____

CONTRACT FOR: _____
(GENERAL, MECHANICAL, ELECTRICAL, OTHER)

CONTRACT DATE: _____ CONTRACTOR P.O.NO:_____

PROJECT OR DESIGNATED AREA SHALL INCLUDE: _____

The contractor hereby certifies the Work of this project to be in complete conformance to the Contract Documents and to be substantially complete, enabling the Owner to make use of the Work as intended.

By his signature below the Contractor further requests Designer and Owner to inspect the Work and to concur in the Work's substantial completion by their signature and/or to provide in a timely manner to Contractor a listing of work items adjudged by them as remaining to be completed or corrected. Contractor agrees to complete and correct all work items representative of such listing within ___ days from date of receipt from designer.

Contractor Company Name _____ By *(written) (typed or printed)* _____ Date
(Shall be signed by same representative who signed Contract)

A list of items to be completed or corrected, verified by the Designer and Owner, is (is not) appended hereto. Failure to include any incomplete items on such list does not alter the responsibility of the Contractor to provide all Work in complete conformance with the Contract Documents.

Designer Company Name _____ By *(written) (typed or printed)* _____ Date
(Shall be signed by Designer of Record with Certification Responsibility to the State of Indiana)

The Work performed under this Contract has been reviewed and found to be substantially complete by the Director of Public Works who has hereby established the Date of Substantial Completion as _____ which is also the date of commencement of all warranties and guarantees required by the Contract Documents. The Date of Substantial Completion of the Work or designated portion thereof is the date established by the Director of Public Works when construction is sufficiently complete, in accordance with the Contract Documents, so the Owner may occupy the Work, or designated portion thereof, for the use for which it is intended.

The Owner accepts the Work or designated portion thereof as substantially complete and assumes full possession thereof, in accordance with the contract documents.

STATE OF INDIANA _____ _____
Owner By: Director Public Works Date
(Shall be signed by Director of Public Works as Owner's representative)

The responsibilities of the Owner and the Contractor for maintenance, heat, utilities, and insurance shall be as set out in the Contract Documents.

SECTION 01010

GENERAL REQUIREMENTS

1.01 DESCRIPTION:

A. This project consists of drainage improvements along the park road to prevent future roadway slope erosion and the armoring of the roadway and roadway slopes near the existing large culverts at Rush Creek in HARMONIE STATE PARK, Posey County. The project generally includes but is not limited to the following:

Riprap Bank Stabilization
Articulated Concrete Block Installation
Roadway and Drive Paving with Asphalt
Roadway Milling
Roadway Full Depth Paving with Concrete
Roadway Patching for Structure Installations
Roadway Pavement Marking Installations
Roadway Drainage Structure Installations
Roadway Maintenance of Traffic
Roadway Crack Sealing
Curb Installations
Curb Turnout Installations
Wood Bollard Installations
Erosion Control

B. The Contractor shall perform all work required to complete the project in accordance with the contract documents.

C. The Contractor will provide a 1-year warranty on the work.

D. Questions related to the bid documents shall be submitted to the Engineer and Project Manager via email no later than **10 days prior** to the bid opening.

Engineer/Designer: Dwayne Sanders, dsanders@lochgroup.com
DNR Project Manager: Victor Jaures, vijaures@dnr.in.gov

1.02 BID:

The Base Bid shall include all work and requirements indicated by the Bidding Documents.

The Contractor shall not be allowed extra compensation by reason of any matter or thing concerning which the Contractor could have fully informed himself prior to bidding. No verbal agreement, understanding or conversation with an agent or employee of the Owner, either before or after the execution of this contract, shall affect or modify the terms or obligations herein contained.

1.03 SITE ACCESS PRIOR TO BIDDING:

Bidders are encouraged to visit the construction site for on-site inspection prior to bidding.

Property Contact: Zach Clark, email: zclark@dnr.in.gov, Phone: 765.427.9789

1.04 USE OF CONTRACT DOCUMENTS:

A. Contractor shall examine all Specifications and Drawings for the Work, including those that may pertain to Work Contractor does not normally perform with its own forces.

B. Contractor shall use all the Project Drawings and Specifications:
   1. For a complete understanding of the Project.
   2. To determine the type of construction and systems required.
   3. For coordination with other contractors.
   4. To determine what other work may be involved in various parts or phases.
   5. To anticipate and notify others when work by others will be required.
   6. And all other relevant matters related to the project.

C. Contractor is also bound by all requirements of the Contract Documents which are applicable to, pertain to, or affect its work, as may be shown or inferred by the entire set of Project Drawings and Specifications.

1.05 COMMENCEMENT AND COMPLETION OF WORK:

A. No construction will be allowed before Notice to Proceed is given.
B. Tree removal will be allowed after Notice to Proceed is given, utilizing flagging operations as needed and approved by the Harmonie State Park Superintendent.
C. The Contractor will be required to have an IDNR approved product submittal for the Articulated Concrete Block System before ordering materials.
D. The project intermediate completion date shall be July 30th, 2027. The contractor will be required to have both lanes of the park road open to traffic.
E. The project substantial completion date shall be August 20th, 2027.
F. Information about an optional Pre-Bid Meeting will be included in the notice to bidders.
G. Work shall not commence until all labor, materials and equipment are available so Work can continue without interruption or delay.
H. This project, or portion thereof, will not be ready for substantial completion review until test and performance evaluations are completed, all items are installed, and area is clear of construction rubbish and debris.

1.06 BUILDER'S RISK INSURANCE:

A. The Builders Risk insurance requirements as specified in the General Conditions (11.2.5) are waived for this project.

1.07 SUBMISSION OF POST-BID INFORMATION: Submit the following information within ten (10) days of receipt of Notice to Proceed.

A. Designation of the work to be performed by the Contractor with his own forces.

B. A list of Subcontractors.

C. A list of manufacturers and suppliers.

D. A Progress schedule for the work in relation to the entire Project. The Progress

schedule shall be revised and updated at least monthly.

E. A Schedule of Values. This schedule, when approved by the Owner shall be used as a basis for the Contractor's Applications for Progress and Final Payments.

1.08 MEASUREMENT AND PAYMENT - LUMP SUM:

Payment for Lump Sum projects will be based on the accepted schedule of values for the project. No separate measurement for payment will be performed for Lump Sum Work unless otherwise specified in the plans and specifications. All Work described in the Specifications and/or shown on the Drawings shall be included in the Lump Sum Bid.

Where INDOT specifications are referenced in these project specifications, they are referenced for material identification and for means of execution, installation and construction. The method of measurement and basis of payment listed in the INDOT specifications do not apply.

1.09 REMEDIATION ALLOWANCE:

Contractor shall include an allowance of **$ 28,000** in the bid for remediation of unforeseen constraints.

Such constraints may include but are not necessarily limited to unforeseen subsurface conditions particular to this construction site; improperly recorded or unrecorded physical properties and conditions at the site; obstruction of or delays to reasonable work sequences by the Property, or the Owner; and conflict within or omissions from the Contract Documents.

All remediation work shall be authorized in writing prior to execution.

If any portion of the allowance is not used during the project, that portion will revert to the owner and will not be included in the contractor's final payment.

1.10 WORKING HOURS:

A. Contractor shall perform all construction activity between sunrise and sunset and shall not be performed on Saturdays, Sundays, or during the period beginning at 12:00 noon on the last weekday (Monday through Friday) proceeding and continuing until Sunrise on the day following New Year's Day, Memorial Day, Independence Day, Labor Day, Thanksgiving, and Christmas, unless previous arrangements are made with the Owner.

B. All work performed at other times shall be only by approval from the Owner, confirmed in writing, and shall not constitute a change in the contract amount.

1.11 PROGRESS MEETINGS

Progress meetings will be held throughout progress of the Work at intervals agreed to by Owner, Designer, and Contractor.

1.12 EXISTING SITE CONDITIONS:

A. Data on the drawings pertaining to present conditions, dimensions, type of

construction, obstructions on or near site, location of utilities, etc. have been obtained from sources believed reliable, but accuracy of such data is not guaranteed and is furnished solely for accommodation of the Contractor.

B. Existing utility lines have been mapped using surveying to determine their approximate horizontal positions per ASCE 38-02 QL-C. Before starting excavations, Contractor shall locate existing underground utilities in all areas of the work. Utilities may be privately and/or publicly owned.

1.13 CONSTRUCTION AND STORAGE AREA:

A. The Contractor shall confine the construction operations and storage of materials within the project construction work limits.

B. Except for permanent site improvements provided under the Contract, Contractor shall restore property disturbed during the Work to the conditions which previously existed.

C. Parking and Deliveries:
1. Contractor is responsible for control of traffic by vehicles and persons within the limits of its operations.
2. Parking for employees, subcontractors, and agents of Contractor shall be in areas subject to approval of Owner.
3. Access to the site for delivery of construction material of equipment shall be subject to approval of Owner.

1.14 PROTECTION OF FACILITIES AND PREMISES

A. The Contractor shall be responsible for the protection of all facilities during the entire period of service. Any damages to the existing facilities, roads, drainage structures, driveways, landscaping or other State-owned property caused by the contractor shall be repaired to pre-construction conditions by the Contractor at his/her expense and in a manner and schedule approved by the Owner.

B. Prior to mobilization, the Contractor shall furnish to the Owner and Engineer a high resolution, color, audio-video recording of all planned construction areas. The purpose of this recording is to document existing conditions and to provide a fair measurement of required restoration.

C. The Contractor shall power wash all mechanical equipment or vehicle used on the job site to remove mud and debris prior to unloading on the site. This is necessary to prevent contamination by invasive species seeds that may be attached to the equipment.

1.16 ARCHEOLOGICAL AND HISTORICAL ARTIFACTS:

A. If any objects are uncovered during construction which could possibly be of historic archeological importance, this shall be immediately report to Owner. Work at that spot shall not proceed further until Owner has evaluated the object and the area where it was found and approved continuation of the work.

B. If any construction time is lost due to such objects being found, an equal number of

calendar days will be added to the project completion time given in the specifications.

1.17 SALVAGE RIGHTS:

A. Unless stated otherwise in these specifications or on the plans, all equipment and materials removed as part of this project and not being reused shall become the property of the Contractor and removed from the site.

1.18 SAFTEY, REGULATORY REQUIREMENTS, and SPECIAL PROVISIONS:

A. All work including site safety, equipment, materials, property, and fabricated items provided under the Contract shall comply with the provisions of OSHA or IOSHA and other applicable laws and regulations to prevent damage, injury, or loss to people, equipment, materials, and property.

B. Contractor shall comply with roadway weight restrictions including seasonal weight restrictions.

C. The Contractor shall adhere to all conditions of approved permits.
APPROVED PROJECT PERMITS:
1. Letter of Authorization for Construction in a Floodway from IDNR
2. IDEM Nationwide 401 Permit #2025-829-65-GGM-WQC

D. Class II Riprap shall meet INDOT Specifications and be placed at a minimum depth of 30 inches.

E. Tree removal will be allowed from October 1st to March 31st. No tree removal will be allowed from April 1st to September 30th.

F. The Contractor must maintain at least one lane of traffic during construction at all times.

1.19 UTILITY COORDINATION

CenterPoint Electric is within project limits. The CenterPoint Electric Contact is Heather A. Gravino, Email: heather.gravino@centerpointenergy.com, Phone: 812.457.8319.

Harmonie State Park Water and Sewer may be within project limits. The Harmonie State Park Water and Sewer Contact is Zach Clark, email: zclark@dnr.in.gov, Phone: 765.427.9789.

Contractor shall coordinate with utilities as needed to determine and resolve any conflicts with proposed construction. Utility locations have been provided showing the approximate location where utilities are believed to be located. There is no guarantee or warranty as to the accuracy or completeness of said locations. No direct evidence of other utilities was discovered, however there is no guarantee that others do not exist. Public and/or private utility locates may be necessary and their cost shall be included in the Contractor's bid.

All existing utilities that cross existing structures and piping shall be field verified for location, and potholed for depth to ensure proper clearance prior to the start of construction. The Contractor shall notify the Owner/Project Manager in writing as soon as possible after the investigation of any conflicts which are identified and will require resolution.

END OF SECTION

INDOT SPECIFICATIONS

Where INDOT specifications are referenced in these project specifications, they are referenced for material identification and for means of execution, installation and construction. The method of measurement and basis of payment listed in the INDOT specifications do not apply.

100-C-188 STANDARD SPECIFICATIONS

(Revised 05-01-25)

Wherever in the contract documents the 2020, 2022, or 2024 Standard Specifications are referenced, it shall be interpreted to mean the 2026 Standard Specifications.

100-C-281 PG BINDER GRADES

(Adopted 10-19-23)

The Department is changing PG binder grades. Wherever in the contract documents any of the old PG binder grades, as noted in the table below, are referenced, it shall be interpreted to mean the corresponding new PG binder grade listed.

Old and New PG Binder Grade Classification	
Old PG Binder Grade	New PG Binder Grade*
64-22	58S-28
70-22	58H-28
76-22	58E-28
*in accordance with AASHTO M 332.	

107-B-040 ENVIRONMENTAL RESTRICTIONS

(Revised 05-01-25)

The Standard Specifications are revised as follows:

SECTION 107, AFTER LINE 539, INSERT AS FOLLOWS:

107.14.1 Environmental Restriction

The work shall be performed in accordance with the environmental restrictions shown below.

(a) Tree Habitat

All trees outside the construction limits shall not be disturbed.

(b) Indiana Bat

All felling of trees equal to or greater than 3 in. in diameter shall be performed between October 1 and the following March 31, inclusive, so as to minimize project-related impacts on the Indiana bat, Myotis Sodalis.

(c) Fish Spawning

If the contract contains an in-channel excavation restriction due to impacts upon fish spawning, the Contractor may request a waiver of a portion of the restriction period by means of written contact to the Indiana Department of Natural Resources Division of Fish and Wildlife, Environmental Supervisor. Such request shall be made not more than two weeks prior to anticipated in-channel work during the restriction period shown above. The expected response time from the Indiana Department of Natural Resources will be approximately five business days. The Indiana Department of Natural Resources will consider each waiver on a case-by-case basis.

The information and criteria shown below shall be provided with the waiver request.

1. *Location of the project, including stream name, route number or road name, Indiana Department of Natural Resources Certificate of Approval of Construction in a Floodway docket number, and description of the proposed work.*

2. *Amount of time required to do the work, and the dates requested to be waived. The amount of time required shall be reasonable to accomplish the proposed work.*

3. *The amount of in-channel area proposed to be disturbed by the work. Disturbance across the full width of the stream may result in more negative impacts than disturbance of smaller portions of the stream.*

4. *Water level at the time of the request.*

5. *Approximate water temperature at the time of the request.*

6. *The substrate of the stream bottom at the project site, 100 yd upstream of the site, and 100 yd downstream of the site. A bedrock substrate is not necessarily beneficial for spawning areas. However, silt, sand, or small gravel is more readily usable. Spawning locations which are downstream of the project may more likely be impacted by disturbances than such locations which are upstream. Sediments may cover eggs.*

A waiver of a portion of the in-channel excavation restriction will be cause for the Department to adjust contract times accordingly. Final approval of the waiver will be made by the Department. Such approval will not occur until the contract time adjustment is agreed upon.

PART 1 – GENERAL

1.01 WORK INCLUDED

Description.

The work consists of any erosion control blankets or mats to be installed on Department of Natural Resource property. This specification includes APPROVED products, installing measures or performing work to control erosion and minimize the production of sediment and other pollutants to water and air from construction activities.

PART 2 – PRODUCTS

A. Erosion control blanket shall be **Curlex NetFree** or equal.

B. Before construction shall commence, **ALL** erosion control blankets or mats shall be coordinated and submitted for review with DNR F&W for compliance.

C. The fibers shall be made into blanket form without the aid of **ANY** netting. This also excludes the use of jute nettings.

D. The fibers shall be of consistent thickness and evenly distributed throughout the blanket.

E. The product shall be 100% biodegradable erosion control blanket.

F. Product shall be approved on slopes 3H:1V and flatter and additionally be approved for use in channels with a capability of withstanding tractive forces of 1.0 lb/ft^2.

G. Product shall be made of wood fibers and naturally seedfree.

H. 80% of fibers shall be a minimum of 6 inches long.

PART 3 - EXECUTION

3.01 GENERAL

A. Installation of the product shall follow product manufactures instructions.

Tech Note

Curlex® NetFree™

Excelsior Erosion Control Blanket
The Industry's First ECB Without Netting

American Excelsior Company is proud to release another innovation - Curlex NetFree Erosion Control Blanket (ECB). Curlex NetFree is the first ECB that does not contain netting of any type; however, the product still possesses all the unique and beneficial properties of the Curlex fiber.

WHY NETFREE?

American Excelsior Company recognized the erosion control industry's need for an ECB that did not contain any netting. Many applications of ECBs require netting materials to degrade or decompose sooner than nettings are capable of. Residential projects, golf courses, environmentally sensitive areas are a few example applications. Curlex NetFree has solved the many problems that are associated with ECB netting:

- No more entrapment of wildlife or pets
- No more netting tangled in mowing equipment
- No more worries about future environmental risks - ***Curlex NetFree is 100% biodegradable***
- No more tripping on netting
- No more waiting for netting to decompose

APPLICATIONS/TESTING

Curlex NetFree ECB is intended for use on slopes ≤ 3H:1V. Large scale testing that followed procedures outlined in ASTM D-6459, "Standard Test Method for Determination of Erosion Control Blanket (ECB) Performance in Protecting Hillslopes from Rainfall-Induced Erosion" showed the ability of Curlex NetFree to protect slopes from rainfall-induced erosion. Curlex NetFree has a C factor (cover management value from the Revised Universal Soil Loss Equation) of .063, which is the ratio of soil loss from an area protected with Curlex NetFree to soil loss from a identical but unprotected area.

Curlex NetFree ECB is intended for use in low-flow channels. Large scale testing that followed procedures outlined in ASTM D-6460, "Standard Test Method for Determination of Erosion Control Blanket (ECB) Performance in Protecting Earthen Channels from Stormwater-Induced Erosion", showed the ability of Curlex NetFree to protect channels from stormwater-induced erosion. Curlex NetFree will withstand tractive forces ≤ 1 lb/ft² .

MATERIAL SPECIFICATIONS

Curlex NetFree ECB shall conform to the following specifications at time of manufacture:

Fiber	Great Lakes Aspen Excelsior with no seeds Curled, interlocking fibers with barbed edges
Fiber Size	80% of fibers a minimum of 6 in (15.2 cm) long 0.038 in ± 0.010 in wide x 0.018 in ± 0.003 in thick (0.97 mm ± 0.25 mm wide x 0.45 mm ± 0.08 mm thick)
Mass per unit Area[a]	0.73 lb/yd^2 (0.40 kg.m^2) -0 + 15%
Thread Material	Biodegradable
Width	8.0 ft (2.4 m) -0 in (mm) + 1.0 in (25.4 mm)
Length	90.0 ft (27.4 m) -0 ft (m) + 2.0 ft (0.6 m)
Area	80.0 yd^2 (66.9 m^2)

[a]Weight is based on a dry fiber weight basis at time of manufacture. Baseline moisture content of Great Lakes Aspen excelsior is 22%.

850 Avenue H E
Arlington, Texas 76011

Phone: 800-777-SOIL
www.Curlex.com

American Excelsior Company®

CONTECH® ENGINEERED SOLUTIONS
A QUIKRETE® COMPANY

ARMORTEC® Product Details

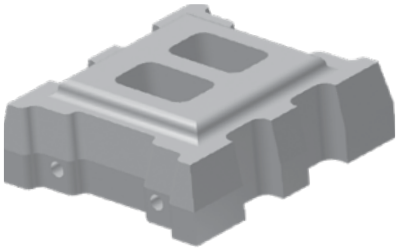

ArmorFlex® - Open Cell

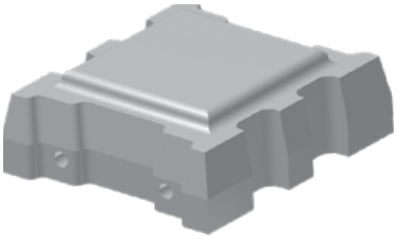

ArmorFlex® - Closed Cell

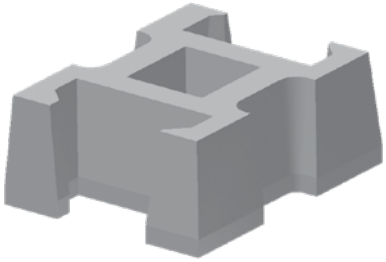

ArmorLoc®

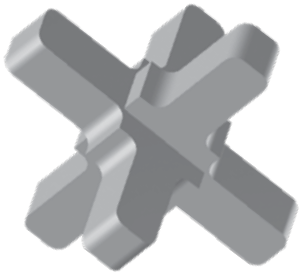

A-Jacks®

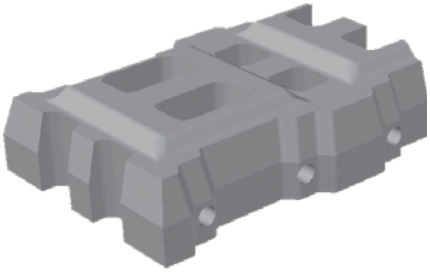

ArmorFlex® Block and a Half®

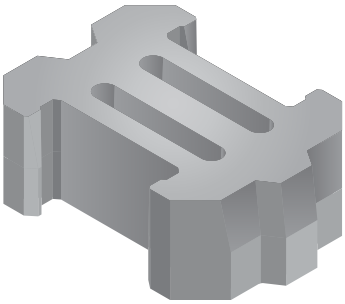

Geolink®

ARMORTEC®
Erosion Control Solutions

ArmorFlex® (not to scale)

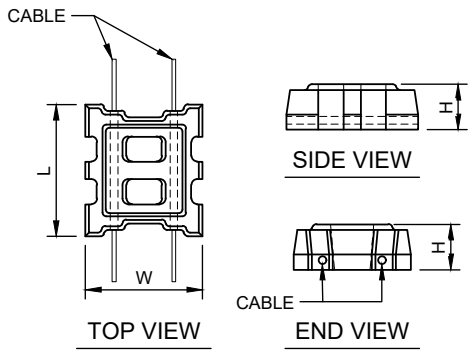

OPEN CELL BLOCK

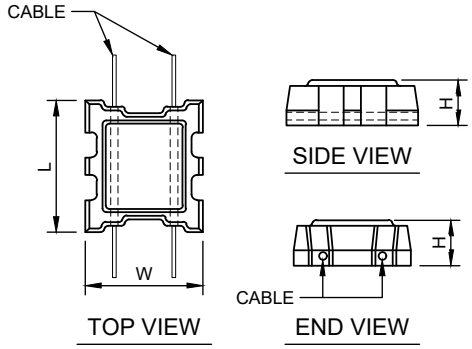

CLOSED CELL BLOCK

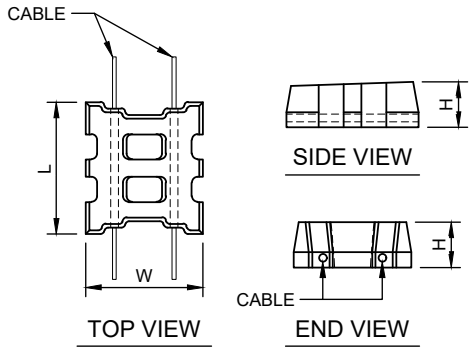

TAPERED OPEN CELL BLOCK

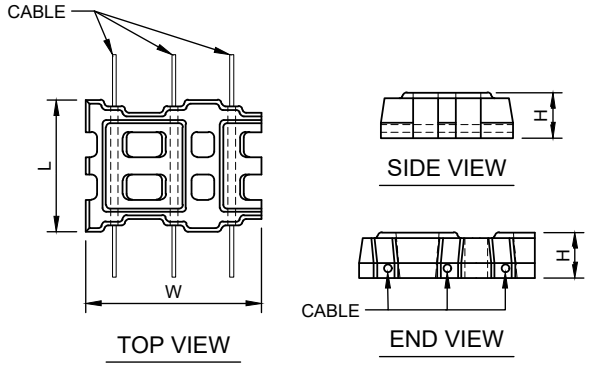

BLOCK AND A HALF BLOCK

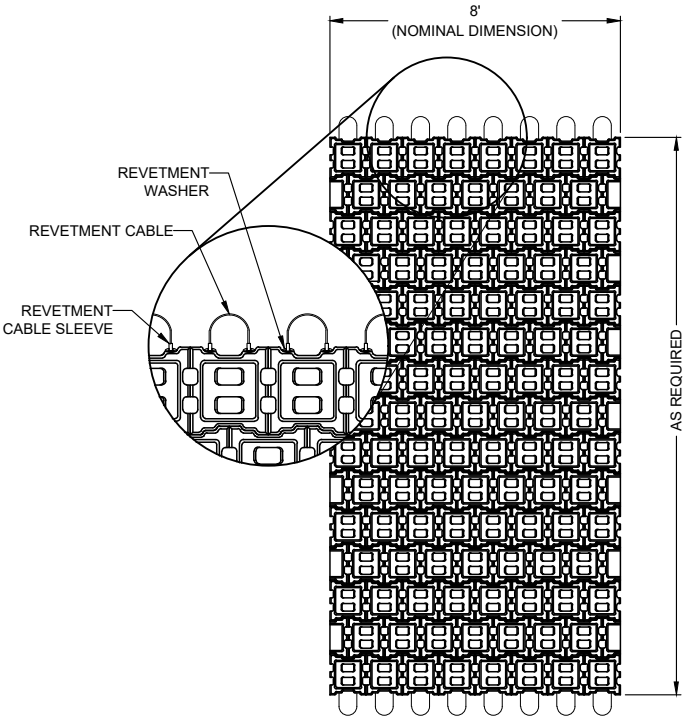

TYPICAL MAT PLAN

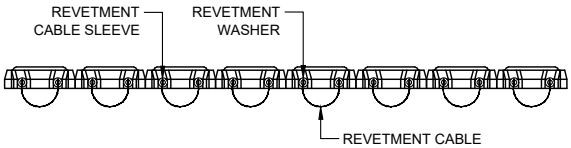

TYPICAL MAT END VIEW

ArmorFlex Unit Specification

Concrete Block Class	Nom. Dimensions (in.)			Gross Area/ (sq. ft.)	Typ. Block Weight	
	L	W	H		lbs	lbs/sq. ft.
Open Cell - 20% Open Area						
40	17.4	15.5	4.75	1.77	59	40
50	17.4	15.5	6	1.77	76	50
70	17.4	15.5	8.5	1.77	108	70
40L	17.4	23.6	4.75	2.58	97	40
50L	17.4	23.6	6	2.58	116	50
70L	17.4	23.6	8.5	2.58	174	70
Closed Cell - 10% Open Area						
45	17.4	15.5	4.75	1.77	71	45
55	17.4	15.5	6	1.77	91	55
85	17.4	15.5	8.5	1.77	136	85
45L	17.4	23.6	4.75	2.58	109	45
55L	17.4	23.6	6	2.58	138	55
85L	17.4	23.6	8.5	2.58	207	85
High Velocity Appication - Tapered Open Cell - 20% Open Area						
40-T	17.4	15.5	4.75	1.77	58	40
50-T	17.4	15.5	6.00	1.77	75	50
70-T	17.4	15.5	8.50	1.77	109	70

ArmorFlex® cont. (not to scale)

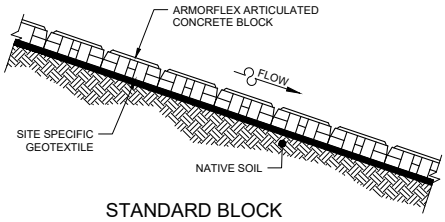

STANDARD BLOCK
TYPICAL CROSS SECTION

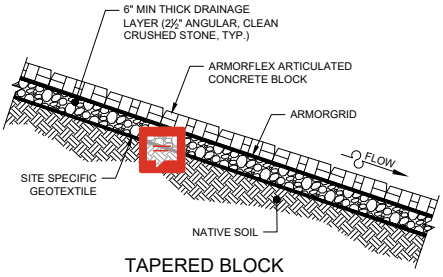

TAPERED BLOCK
TYPICAL CROSS SECTION

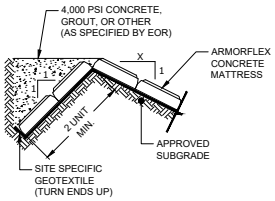

TOP OF SLOPE
TERMINATION DETAIL

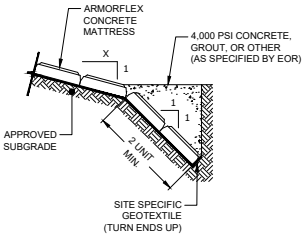

TOE OF SLOPE
TERMINATION DETAIL

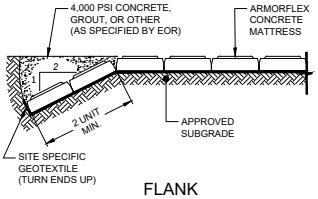

FLANK
TERMINATION DETAIL

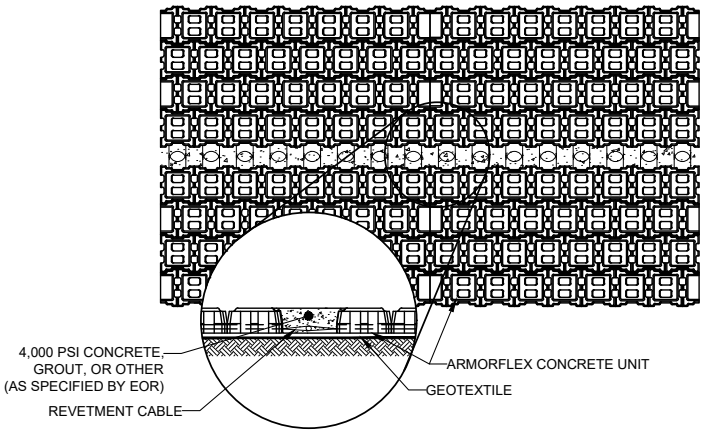

TYPICAL MAT TO MAT

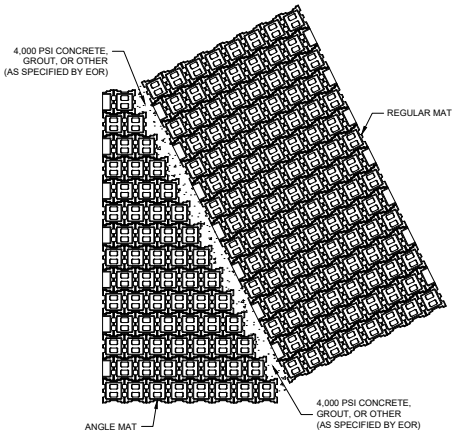

NOTE:
ANGLE MATS WILL BE CONSTRUCTED BY OMITTING THE REQUIRED UNITS SO THE REQUIRED MAT DIMENSIONS CAN BE OBTAINED.

TYPICAL ANGLE MAT

107-C-273 MIGRATORY BIRD PROTECTION

(Adopted 09-16-21)

Description

This work shall consist of protecting migratory bird species as required by the Migratory Bird Treaty Act, MBTA, in accordance with 105.03.

Materials

Materials shall be as required and as described herein.

Construction Requirements

The structures may, or may not, have shown evidence of use, such as nests, by a bird species protected under the MBTA during previous inspections. Every effort shall be made by the Contractor not to disturb any nests with eggs or young.

Intentional taking of migratory birds or nests with eggs or young without a federal permit is prohibited by the Migratory Bird Treaty Act, 16 U.S.C. 703-712.

During the period between May 1 and September 7, bridge work on structures with migratory birds will be allowed provided the procedure below is implemented.

No special action is necessary by the Contractor for bridge work performed entirely on the deck as long as the Contractor shall not require access to areas where birds are nesting and contract work will not result in the disturbance of nesting adults or to their eggs or young. Disturbance is any activity that would result in reproductive failures or the killing of eggs or young.

For bridge structures that have previous or current evidence of use and where the work will be done entirely on the deck that may result in perforation of the deck or create strong vibrations that could potentially dislodge nests beneath the deck or that requires activity above and below the deck to include removal shall require that the Contractor use exclusionary devices to deter birds from nesting beneath the deck prior to start of work. If birds are present, the Contractor shall determine the status of the birds, their nests, and young and shall take any and all actions necessary to meet the requirements of the MBTA.

For bridge work performed from September 8 to April 30, birds are normally not nesting; therefore, no special actions by the Contractor are necessary after an inspection is conducted to determine that no birds are present.

Avoidance and Minimization Measures

Measures designed to avoid and minimize impacts to migratory birds nesting on structures shall be implemented prior to April 30 and be maintained throughout the nesting season. The Contractor shall be responsible for developing a project specific avoidance and minimization plan that shall be as approved by the Engineer. Avoidance and minimization measures shall include, but shall not be limited to:

After inspection and confirmation that no active nests with eggs or young are present, the Contractor shall remove existing nests and other nesting debris from the bridge girders or other surfaces that will be

impacted by the project.

After nest removal, exclusion devices shall be installed on the structure, especially if the start of construction will be delayed after April 30. Exclusion devices may include plastic sheeting, canvas, burlap or other material to block access to the underside of bridges and exterior girders. Ledge protectors, such as coil, pin and wire, can be placed on structures to prevent nest building where appropriate. The use of weather resistant polypropylene netting with 1/4 in. or smaller openings is also an option but is not recommended since it can trap adult birds.

After nest removal, hazing or harassment devices using sight or sound to scare the birds away may be installed on the structure. Materials may include mylar flagging and auditory speakers. Other sensory deterrents such as active construction, predator models, scare balloons and sonic devices may also be used.

The Contractor shall inspect the underside of the existing structure on a routine basis to ensure that nests are removed prior to egg laying and that exclusion devices that have been damaged are repaired. If eggs or young are present, construction activity that may impact those nests shall not occur and the Department's Office of Environmental Services shall be contacted. No additional contract time will be granted if eggs or young are found.

If approved by the Engineer, the Contractor shall consider not removing nests that are near, but not in, the immediate work area. The nests may also be screened from construction to prevent impacts. Work may continue if the active nests will not be destroyed and if parent birds will not be precluded from tending their nests to the extent that eggs or young are negatively impacted.

Status of Birds and Nests

If birds penetrate the barrier or nest building has commenced, the Contractor shall determine how birds are entering the underside of the bridge and adjust or repair the barrier to prevent further access. If nest building or repair of existing nests has begun, but no eggs or young are present in the nests based upon visual inspection of the nest and activity of the adults, the Contractor shall remove the nests.

Every effort shall be made by the Contractor not to disturb any nests with eggs or young. If active nests with eggs or young are found that would be affected by construction activities, work shall be delayed until an evaluation of nesting status and avoidance and minimization measures implemented or the birds fledge from the nest.

Method of Measurement

Monitoring the structures, removal of nests and the furnishing, installation, and removal of bird deterrents, and all other activities associated with the migratory bird protection as described herein will not be measured for payment.

Basis of Payment

All costs for determining the need for, the placing of deterrents and all costs associated with conducting work in compliance with the MBTA as stated herein will not be paid for separately but shall be included in the cost of other items.

203-R-806 EXCAVATION AND EMBANKMENT

(Revised 10-16-25)

The Standard Specifications are revised as follows:

SECTION 203, BEGIN LINE 353, DELETE AND INSERT AS FOLLOWS:

~~Soils containing organic material greater than 6% by dry weight, or soils with a maximum dry density of less than 90 pcf shall not be incorporated in the embankment. Organic content will be determined in accordance with AASHTO T 267, and maximum dry density will be determined in accordance with AASHTO T 99~~*Soils meeting the following criteria will be allowed to be used in embankment:*

Soil Property	*Test Method*	*Requirements*
Dry Weight Organic Material	*AASHTO T 267*	*≤ 6 %*
Maximum Dry Density	*AASHTO T 99*	*≥ 90 pcf*
Soluble Sulfate	*ITM 510*	*≤ 1,000 ppm*

Frozen materials, stumps, roots, all or parts of trees, brush, weeds, sod, *all spongy, yielding, soft, and unstable materials,* or other perishable materials shall not be incorporated in the embankment. ~~Rocks greater than 3 in. in any dimension shall not be left within 18 in. of the finished subgrade~~*Removed materials may only be used in embankment construction if they are constructed in accordance with 203.23.* The original ground surface, or the surface of any lift in place shall not be frozen and shall be free of snow, ice, or mud.

~~All vegetation, all spongy, yielding, soft, and unstable materials, which are encountered, shall be removed as shown on the plans or as directed. Removed materials may only be used in embankment construction if they are constructed in accordance with 203.23.~~

After clearing of the embankment area and prior to embankment placement, all pronounced depressions left in the original ground shall be filled with suitable material and compacted in accordance with 203. Proofrolling of the natural ground surface shall be performed in accordance with 203.26 within all areas where new fill shall be placed.

If the original ground cannot be compacted to the required strength because of soft or unstable soils, the use of stabilizing materials consisting of coarse aggregate No. ~~5~~*2* encapsulated in geotextile, in accordance with 214.03(a), or soil ~~drying~~*stabilizing* with a chemical modifier in accordance with ~~217~~*215* shall be used as directed. The coarse aggregate materials used for stabilization shall be 1 to 2 ft thick and shall allow the encapsulated material in the embankment to drain.

When free water is encountered, backfilling shall be accomplished using ~~B borrow~~*sand or other approved material*, in accordance with ~~904.06~~*903.02.* ~~with the exception that~~ ACBF or GBF shall not be used *in backfilling*. Backfilling using ~~B borrow~~*sand or other approved material* shall occur to an elevation at least 2 ft above the free water level. ~~Compaction of the B borrow placed above the free water level shall be accomplished using heavy vibratory equipment.~~

The use of hydraulic methods to construct embankments will be allowed only when authorized in writing. Only ~~B borrow~~*sand or other approved material* without ACBF or GBF shall be placed below the free water level. Backfill at structures shall be in accordance with 211.04.

The embankment shall be kept drained at all times by keeping the center higher than the sides and uniformly graded. *Side ditches shall be constructed as directed prior to the construction of the embankment.*

Each embankment lift shall extend transversely over the entire area and shall be kept smooth. When fill materials are deposited in large masses onto the embankment, the materials shall be spread out in uniform lifts. *Rocks greater than 3 in. in any dimension shall not be left within 18 in. of the finished embankment.* Rock or shale used for embankment construction shall be in accordance with 203.20.

When grading operations are performed in non-daylight hours, artificial lighting shall be provided and maintained, to enable the construction and inspection of the operations.

When the embankment soils are granular, silty loam, sandy loam, *or* silts, ~~or when the plasticity index of the material is less than 8,~~ the embankment shall be encased with materials consisting of silty clay loam, clay loam, sandy clay loam, or silty clay of 12 in. minimum depth measured perpendicular to the face of the slope. ~~The plasticity index for these materials shall be equal to or greater than 8 and the organic content shall not exceed 6%.~~ The surface of any necessary encasement shall meet the finished slope limits shown on the plans or as directed.

All slopes to be graded and not immediately stabilized with stormwater management control measures shall be roughened, as described herein, until stormwater management control measures are placed. The soil slopes shall be roughened to create a series of ridges and depressions parallel to the contour by making grooves at least 1 in. deep and not more than 15 in. apart. Slopes shall be stabilized in accordance with 205. Roughening shall take place each day after work is performed on the slopes, or as directed to re-establish the roughening.

Sufficient quantities of excavated materials suitable for the growth of vegetation shall be preserved from within the planned excavation area and used on constructed cut, fill, and shoulder slopes to help develop the growth of vegetation. Materials suitable for vegetative growth shall be at least 6 in. deep or as indicated within the contract documents and shall be measured perpendicular to the face of the slope. *This material shall have a pH value in accordance with 914.01 prior to placement.* Unless otherwise provided, no additional compensation will be allowed for this work, except payment will be made for the class of excavation involved for authorized undercutting of back slopes. Encasement of rock embankment and cut slopes will not be required unless otherwise directed. *The material placed on backslopes of cut sections shall be placed in accordance with 203.21.*

~~Material suitable for the growth of vegetation shall be in accordance with 914.01 prior to placement. The material placed on backslopes of cut sections shall be placed in~~

~~accordance with 203.21.~~

SECTION 203, BEGIN LINE 761, DELETE AND INSERT AS FOLLOWS:

203.18 Embankment Construction

Embankment construction shall consist of constructing roadway embankments, including preparation of the areas upon which they are to be placed, the construction of dikes within or outside the right-of-way, the placing and compacting of approved material within roadway areas where unsuitable material has been removed, and the placing and compacting of embankment material in holes, pits, and other depressions within the roadway area. Only approved materials shall be used in the construction of embankment backfill. Recycled concrete pavement processed into coarse aggregate shall be from past documented Department projects. RAP shall be the product resulting from the cold milling or crushing of an existing HMA pavement. Rocks, broken concrete, RAP, or other solid materials shall not be placed in embankment areas where piling*,* ~~and~~*mechanically stabilized earth walls, soil nail walls, or* other foundations are to be placed or driven.

Recycled concrete pavement measuring 12 in. or less in all directions may be incorporated into the embankment. Reinforcement shall not protrude from the recycled concrete pavement aggregate. Construction of embankment shall be in accordance with 203.20(a). Each layer shall be choked with broken concrete aggregates and be compacted to the required stiffness or as directed. The final ~~30~~*24* in. of the embankment ~~just below~~*and* the subgrade shall be composed of material meeting the gradation requirements of coarse aggregate *No. 53* in accordance with 904.01~~, or B-borrow in accordance with 904.06~~. Construction requirements shall be in accordance with 211.03. *Recycled concrete pavement shall not be used within 2 ft of the water table.*

~~Only RAP particles measuring 2 in. or less in all directions shall be incorporated into the top 30 in. of the embankment. When an underdrain is specified, the RAP embankment shall be terminated below the bottom of the underdrain and the rest of the embankment shall be constructed with the coarse aggregate. RAP particles incorporated anywhere in the embankment shall be 5 in. or less. RAP shall be constructed in accordance with 203.24.~~

~~When two sizes are used for one embankment, materials shall be separated with a layer of geotextile in accordance with 918.02(c), Type 2A. Geotextile used between recycled material lifts shall be included in the cost of the embankment pay item.~~

RAP particles measuring 2 in. or less in all directions may be incorporated in embankments. Compacted lift thickness for RAP shall not be greater than 6 in. when the embankment is 5 ft or less. Where the depth of the embankment exceeds 5 ft, the compacted lift thickness for RAP shall not be greater than 12 in. RAP shall only be used below the elevation of the pavement underdrains. RAP shall be constructed in accordance with 203.24.

Recycled concrete pavement processed into coarse aggregate and RAP shall not be mixed together or *mixed* with other materials. When two or more approved materials are allowed for one embankment, materials shall be separated with a layer of geotextile in accordance with 918.02(c), Type 2A. Geotextile used between recycled material lifts shall be included in the cost of the embankment pay item.

~~Recycled concrete pavement processed into coarse aggregate or RAP shall only be used below the elevation of the pavement underdrains. Compacted lift thickness for RAP shall not be greater than 6 in. within the top 30 in. of the embankment. Where the depth of the embankment exceeds 5 ft, the compacted lift thickness for RAP shall not be greater than 12 in. Recycled concrete pavement and RAP shall not be used within 2 ft of the water table.~~

Proofrolling in accordance with 203.26 shall be performed over the entire grade at a maximum thickness of 5 ft of recycled concrete ~~or RAP~~*prior to the placement of the next lift.*

~~A geotextile in accordance with 918.02(c), Type 2B shall be placed in accordance with 214 prior to the placement of~~ ~~s~~*S*ubgrade treatment Type IC or Type II in accordance with 207 ~~when~~*shall be constructed on* recycled concrete pavement processed into coarse aggregate or RAP~~ is used for embankment construction~~. ~~Recycled concrete pavement processed into coarse aggregate or RAP shall not be used for embankment construction when subgrade Type I, Type IBC, or Type IBL is specified. Geotextile shall be placed completely covering the top of the embankment.~~ A minimum 24 in. soil encasement shall be constructed concurrently with the recycled concrete pavement processed into coarse aggregate or RAP lift. The soil encasement shall be suitable for vegetation growth and shall be constructed in accordance with 203.09.

SECTION 203, BEGIN LINE 853, DELETE AND INSERT AS FOLLOWS:

203.20 Rock and Shale Embankment

Utilization of these materials in embankment construction shall be in accordance with the following.

(a) Rock Embankment

~~Where~~*When* rock is used for embankment, no large stones shall be allowed to nest but shall be distributed over the area to avoid pockets. Voids shall be filled carefully with small stones. The final ~~2 ft~~*6 in.* of the embankment ~~just below the subgrade elevation shall be composed of suitable material placed in layers not exceeding 8 in. loose measurement and compacted to the required density. Shale or shale-like materials shall not be incorporated in the upper 2 ft of the embankment~~*shall be constructed with No. 53 aggregate in accordance with 301. A geotextile in accordance with 918.02(a), Type 2A shall be placed between the rock and No. 53 aggregate in the embankments described below. The geotextile shall be placed in accordance with 214.03. The rock embankment lift thickness shall not exceed 2 ft.*

~~Where~~*When* the depth of an embankment exceeds ~~5~~*10* ft, ~~and is to consist entirely of rock,~~ the rock *size used in the top 10 ft of the embankment shall not exceed 1 ft in any dimension. For any portion of the embankment below the top 10 ft, the rock size* shall~~ be deposited in lifts~~ not ~~to~~ exceed ~~the top size of the material being placed, but in no event exceeding 4~~*2* ft *in any dimension*. The rock for any particular lift shall be deposited on and pushed over the end of the lift being constructed by means of ~~bulldozers~~*track mounted dozers* or other approved equipment. Depositing of rock over the end of any lift from hauling equipment will not be allowed. If the voids of the last lift are not closed sufficiently, they shall be choked with small broken stone or other suitable material and compacted ~~as~~

~~directed~~*with a vibratory roller. The material shall be spread with a track mounted dozer or other equipment having a minimum effective weight of 40 t. This sequence of steps shall be repeated for the remaining sections of the embankment. The final 6 in. of the embankment shall be constructed using coarse aggregate No. 53 in accordance with 301.*~~ A geotextile in accordance with 918.02(a), Type 2A shall be placed between the rock and the soil~~.

~~Where the depth of embankment is 5 ft or less, or where the material being placed does not consist entirely of rock, the material shall be placed in lifts not to exceed the top size of the rock being placed but not exceeding 2 ft. Each layer shall be choked thoroughly with broken stone or other suitable material and be compacted to the required density or as directed. A geotextile in accordance with 918.02(a), Type 2A shall be placed between the rock and the soil~~*When the depth of an embankment is less than or equal to 10 ft, the rock size shall not exceed 1 ft in any dimension. The material shall be spread with a track mounted dozer or other equipment having a minimum effective weight of 40 t. The material shall be choked with small broken stone and compacted with a vibratory roller. This sequence of steps shall be repeated for the remaining sections of the embankment. The top 6 in. of the embankment shall be constructed using coarse aggregate No. 53 in accordance with 301.*

Where a rock fill is to be placed over a structure, the structure shall first be covered with 2 ~~to 4~~ ft of ~~earth~~*structure backfill* or other approved material *as directed,* and properly compacted before the rock is placed. This covering shall be placed in accordance with 203.19. *Structure backfill shall be constructed in accordance with 211.*

~~Shale shall not be incorporated as rock embankment unless written permission is obtained.~~ *Proofrolling shall be performed on the final lift of the embankment in accordance with 203.26.*

Payment for rock embankment construction will be in accordance with 203.28.

SECTION 203, BEGIN LINE 955, DELETE AND INSERT AS FOLLOWS:

203.21 Embankment on Hillsides or Slopes

The side ditches and drainage blankets shall be constructed prior to the embankment construction. Drainage blankets shall be in accordance with 214. ~~Before a~~*A*n embankment ~~is~~ *shall be* placed on ~~natural soil slopes or~~*a drainage blanket when* existing fill slopes ~~of~~*are* 4:1 or flatter~~,~~. ~~the existing ground surfaces shall be plowed or deeply scarified or, i~~*I*f the nature of the ground indicates greater precautions should be taken for integrating the proposed fill materials with the existing slopes, benches shall be cut into the existing slopes before fill placement is started. ~~All such precautionary work shall be done as directed. No direct payment will be made for plowing or scarifying, the cost thereof shall be included in the various pay items of the contract. Before an embankment is placed on natural soil slopes or existing fill slopes steeper than 4:1, b~~*B*enches a minimum of 10 ft wide, unless otherwise specified, shall be cut into the slopes prior to the placement of embankment fill *when the existing fill slopes or natural soil slopes are steeper than 4:1*. If benches are cut, the excavation involved will be paid for at the contract unit price per cubic yard for the class or classes of excavation encountered.

SECTION 203, BEGIN LINE 1028, DELETE AND INSERT AS FOLLOWS:

203.23 Embankment other than Rock, with Strength or Density Control

The compaction will be determined by DCP testing in accordance with ITM 509 and the moisture content in accordance with ITM 506. Soil classification will be performed ~~in accordance with the ITM 512~~*by the Department.* ~~and t~~*T*he following DCP blow counts will be used for compaction control:

COHESIVE SOILS: A-4, A-5, A-6, and A-7					
Textural Classification	Maximum Dry Density (pcf)	Optimum Moisture Content Range (%)	Acceptable Minimum DCP value for 6 in. for 95% compaction	Acceptable Minimum DCP value for 12 in. for 95% compaction	Acceptable Minimum DCP value for 6 or 12 in. for 100% compaction
CLAY SOILS					
Clay	< 105	19 - 24	6		*
Clay	105 - 110	16 - 18	7		*
Clay	111 - 114	14 - 15	8		*
SILTY SOILS					
Silty	115 - 116	13 - 14		9	*
Silty	117 - 120			11	*
SANDY SOILS					
Sandy	121 - 125	8 - 12		12	*
Sandy	> 125			15	*
~~**GRANULAR SOILS - STRUCTURE BACKFILL and A-1, A-2, A-3 SOILS**~~					
~~No. 30~~				~~6~~	~~9~~
~~No. 4~~				~~7~~	~~10~~
~~1/2 in.~~				~~11~~	~~14~~
~~1 in.~~				~~16~~	~~19~~
* Test section required in accordance with ITM 513.					

GRANULAR SOILS - STRUCTURE BACKFILL		
Textural Classification	*Acceptable Minimum DCP value for 12 in. for 95% compaction*	*Acceptable Minimum DCP value for 12 in. for 100% compaction*
No. 30	*6*	*9*
No. 4	*7*	*10*
1/2 in.	*11*	*14*
1 in.	*16*	*19*

GRANULAR SOILS: A-1, A-2, and A-3

AASHTO Classification	*Maximum Dry Density (pcf)*	*Coefficient of Uniformity*	*Acceptable Minimum DCP value for 12 in. for 95% compaction*	*Acceptable Minimum DCP value for 12 in. for 100% compaction*
A-1 Soils	*≤ 120*		*13*	*
A-2 Soils			*12*	*
A-1 Soils	*>120*		*15*	*
A-2 Soils				*
A-3 Soils		*Cu ≤ 3.0*	*7*	*
		Cu > 3.0	*8*	*
** Test section required in accordance with ITM 513.*				

~~Unless otherwise specified, a~~*A*ll material ~~directed to~~*shall* be compacted ~~in accordance with 203.23 shall meet~~*to* the acceptable minimum DCP value for 95% compaction *in accordance with 203.23 unless otherwise specified*. Subgrade shall meet the acceptable minimum DCP value for 100% compaction when required.

As an alternat~~e~~*ive*, ~~all~~ *the* embankment~~s~~ shall be compacted to at least 95% of the~~ir~~ maximum dry density, and ~~all~~ subgrade shall be compacted to at least 100% of the~~ir~~ maximum dry density. In situ density will be determined in accordance with AASHTO T 191 and the moisture content as specified.

~~For clay, silty, and sandy soils compacted to 100% of their maximum dry density, a test section is required in accordance with ITM 513 for DCP testing.~~

Clay soils shall be constructed and tested with DCP in 6 in. lifts, whereas silty, sandy, and granular soils shall be constructed in 6 in. lifts and tested with DCP for 12 in.

205-R-740 PUMP AROUND

(Adopted 09-16-21)

Description

This work shall consist of furnishing, installing, and maintaining a pump around in accordance with 105.03.

The pump around shall be part of the temporary stormwater control plan and shall be constructed with the other temporary stormwater control measures in accordance with 205.

Materials

Materials shall be in accordance with 205.02.

The pump around dikes shall be constructed of non-erodible materials. Sandbag dikes shall be covered with impervious plastic sheeting, placed on the open channel side of the dikes. Sheet piling shall be watertight. Pump around and dewatering hoses shall be made of impervious material.

Construction Requirements

The Contractor may use an alternate method for the channel work as shown on the plans, pending the approval of the Engineer. If an alternate method is proposed, the Contractor shall make the appropriate permit application or amendment.

Traversing the channel reach with equipment within the work area where no work is proposed shall be avoided. If equipment is required to traverse such a reach for access to another area, timber mats or similar measures shall be used to minimize disturbance to the channel. A temporary channel crossing shall be used only when necessary and as approved.

The stormwater control measures adjacent to the channel area shall be installed before construction on the pump around can begin. All work shall stay within the construction limits. Disturbance within that area shall be minimized.

Work shall not be conducted during rain events.

Pump Around

The pump around shall be in accordance with the following:

Dewatering of the channel shall be performed by using a mechanical pump. The intake suction hose shall be floated as long as possible to prevent the pump from pulling sediment from the bottom of the pooled area.

Sandbag dikes shall be installed at the upstream and downstream ends of the work area as shown in the details, and the channel flow shall be pumped around the work area. The pump shall discharge onto a stable velocity dissipater consisting of riprap or sandbags or other approved medium.

Water trapped within the work area shall be pumped to a sediment filtering measure such as a dewatering basin, filter bag, or other approved device. The sediment filtering measure shall be located such that the water drains back into a stabilized area and into the channel below the downstream dike.

Dewatering Filter Bag

A dewatering filter bag shall be securely connected to the end of the discharge hose.

The dewatering filter bag shall be a single-use or reusable type of bag and shall be constructed of non-woven, polypropylene geotextile material. The bag shall have the following minimum specifications:

Permittivity - 1.4 sec^{-1}
Grab Tensile - 205 lbs
Weight - 8 oz/sq yd
Apparent Opening Size - 80 US Sieve.

The dewatering filter bag shall be placed on a flat surface and on riprap or sandbags to help increase the flow through the dewatering bag and help dissipate the velocity.

Water shall be pumped from the channeled area at a rate not to exceed the maximum manufacturer's recommended flow rate of the dewatering filter bag.

Dewatering filter bags shall be placed in a location in which runoff from the bag will pass through additional sediment control measures prior to leaving the site.

Following the completion of the dewatering, the sediment accumulated within the dewatering filter bag shall be removed from the bag and placed in an upland area.

Maintenance and Inspection

The diversion measures shall be inspected within 24 hours of each rainfall event and at least once every seven calendar days. The sediment and debris from the channel or upstream clean water dike shall be removed. The dikes shall be repaired as needed. All outlets shall be checked and repaired as needed to prevent washouts. The dewatering filter bag shall be checked and cleaned.

Removal

Pump around shall be removed after construction in the main channel is complete and permanent stormwater control features have been established. Any areas disturbed by the pump around measures shall be returned to their original condition and re-vegetated as needed.

Method of Measurement

Pump around will be measured by the number of units installed, complete in place.

Basis of Payment

The acceptable quantities of pump around will be paid for at the contract unit price per each.

206-R-719 DEWATERING

(Revised 04-25-21)

Description

The Contractor shall design, furnish, install, test, operate, monitor, and maintain a dewatering system of sufficient scope, size, and capacity to prevent groundwater flow into excavations and allow water and construction operations to proceed on dry, stable subgrades.

Materials

Materials shall be in accordance with the following requirements.

Sediment filter bags shall consist of nonwoven, needle punched polypropylene geotextile consisting of strong, rot resistant, chemically stable long-chain synthetic polymer materials which are dimensionally stable relative to each other including the selvedges. The plastic yarn or fibers used in the geotextile shall consist of at least 85% by weight of polyolefins, polyesters, or polyamides. The plastic yarn or fibers shall have stabilizers and inhibitors added to the base plastic to make the filaments resistant to deterioration due to ultraviolet and heat exposure.

The geotextile shall be in accordance with the physical requirements as follows:

PROPERTY	TEST METHOD	REQUIREMENTS*
Tensile Strength	Grab Tensile Strength, ASTM D4632	200 lb
Elongation	Grab Tensile Strength, ASTM D4632	15%
Bursting Strength	ASTM D3786	350 psi
Seam Strength	Grab Tensile Strength, ASTM D4632	180 lb
Puncture Resistance	ASTM D4833	110 lb
Trapezoid Tearing Strength	ASTM C4533	80 lb
Deterioration in Tensile Strength due to Ultraviolet Degradation at 150 h	ASTM D4355	70% strength retained
Apparent Opening Size, AOS	ASTM D4751	No. 80 standard sieve or filter
Flow Rate	ASTM D4491	80 gal./min/sq ft
* The value in the weaker principal direction shall be used. All numerical values represent minimum average roll value and test results from any sampled roll in a lot shall meet or exceed the minimum values in the table. Lots shall be sampled according to ASTM D4354.		

The size of the filter bag shall be appropriate for the site conditions.

Construction Requirements

Dewatering operations shall be maintained to ensure stability of excavations and constructed slopes and that the excavation does not flood. Surface water shall be prevented from entering excavations by grading, dikes, or other means. Water from work area dewatering pumps shall be discharged through a sediment filter bag, or other approved device. The filter bag shall be located such that discharge water flows back into a stabilized area downstream of the work area. Dewatering shall be accomplished without damaging existing buildings or structures adjacent

to excavation. The dewatering system shall be removed when no longer needed.

The Contractor shall comply with water disposal requirements of authorities having jurisdiction.

The operation of the dewatering pumps and the condition and efficiency of the sediment filter bags shall be closely monitored. Sediment filter bags which do not perform properly or reach their capacity shall be replaced immediately.

The Contractor shall dispose of water removed by dewatering in a manner that avoids endangering public health, property, and portions of work under construction or completed. Disposal of water shall not inconvenience others. Sumps, sedimentation tanks, flow-control devices, and stormwater management in accordance with 205 and as required by authorities having jurisdiction. Sediment in filter bags shall be removed once it has accumulated to the design volume and be disposed of in accordance with 202.

Method of Measurement

Dewatering will not be measured, regardless of how many times the system is moved, replaced or relocated. Sediment filter bags will not be measured regardless of the number of times a day a filter bag may become filled and replaced.

211-R-819 B BORROW AND STRUCTURE BACKFILL

(Adopted 04-16-26)

The Standard Specifications are revised as follows:

SECTION 211, BEGIN LINE 75, INSERT AS FOLLOWS:

Where B borrow or structure backfill is required as backfill at culverts, retaining walls, sewers, manholes, catch basins, and other miscellaneous structures, it shall be compacted in accordance with 211.04. B borrow *or structure backfill* consisting of ACBF or GBF shall not be used within 2 ft of the free water level.

505-R-795 EXCEPTIONS TO AASHTO T 152

(Adopted 05-15-25)

The Standard Specifications are revised as follows:

SECTION 505, BEGIN LINE 63, DELETE AND INSERT AS FOLLOWS:

(e) Exceptions to AASHTO T 152

The exceptions to AASHTO T 152 for determining the air content in ~~portland cement~~ concrete shall be as follows:

~~1. The sample for aggregate correction factor shall be prepared in accordance with 7. The aggregate correction factor shall be determined in accordance with 9.4 and read directly from the meter~~*The aggregate correction factor shall be based on the absorption percentage of the coarse aggregate as shown in the table below.*

Absorption of Coarse Aggregate, %	*Aggregate Correction Factor, %*
≤ 4.00	*0.0*
4.01 – ≤ 4.50	*0.5*
> 4.50	*1.0*

~~2. The aggregate correction factor test shall be rerun for confirmation if the test results for gravel is greater than 0.4% or if the test results for crushed stone is greater than 0.6%.~~

~~3. For aggregates indicating a high correction factor, the aggregate may be washed from the concrete sample and used to determine the correction factor.~~

621-R-800 SEEDING AND SODDING

(Adopted 07-17-25)

The Standard Specifications are revised as follows:

SECTION 621, BEGIN LINE 30, DELETE AND INSERT AS FOLLOWS:

621.03 Preparation of Ground Before Seeding

The area to be seeded shall be made smooth and uniform and shall be in accordance with the finished grade and cross-section shown on the plans or as otherwise designated and shall be trimmed in accordance with 210. The seed bed, if not loose, shall be loosened to a minimum depth of ~~3~~*6* in. before fertilizer or seed is applied. ~~In areas of excessive vehicular traffic, such as parking of construction equipment near a bridge repair, the soil shall be loosened to a minimum depth of 6 in.~~

Areas to be covered with topsoil shall be milled or disked slightly before the topsoil is placed. A disk, spike-toothed harrow, or other similar device may be used for this purpose. Such loosening will be required to ensure ~~bond of~~ the topsoil *bonds* with the surface on which it is placed and to form a uniform surface. The topsoil shall then be spread to a sufficient depth to produce the ~~thickness~~ specified *thickness* after it has been compacted lightly with an approved roller, tamping device, or other method. *The topsoil shall be loose enough that the tread of a person's boot shows when walking on the soil but shall not be so loose as to allow more than 1/2 in. of total compaction.*

SECTION 621, BEGIN LINE 54, DELETE AND INSERT AS FOLLOWS:

621.05 Applying Fertilizer, Seed, and Mulch

(a) Fertilizer

Fertilizer as specified shall be spread uniformly over the area to be seeded. Fertilizer shall be spread at the rate of ~~800~~*400* lb/ac unless otherwise specified.

(b) Seed

~~Seed may be drilled in or mixed with water. The mixture shall be sprayed over the area to be seeded. An approved mechanical method which shall place the seed in direct contact with the soil may be used. In places inaccessible to mechanical equipment, or where the area to be seeded is small, a hand operated cyclone seeder or other approved equipment may be used. Seed of warm season grasses, forbs, or aquatic species shall not be covered more than 1/8 in. All other seed shall not be covered more than 1/2 in.~~*Seed shall be applied in a manner that results in uniform distribution of seed in which seed to soil contact at the optimal seed depth is attained necessary for the germination of the species being planted.*

715-R-809 PIPE CULVERTS, AND STORM AND SANITARY SEWERS

(Revised 04-16-26)

The Standard Specifications are revised as follows:

SECTION 715, BEGIN LINE 25, DELETE AND INSERT AS FOLLOWS:

Materials shall be in accordance with the following:

B Borrow 904.06*
Concrete..... 702
Flowable Backfill..... 213
Geotextiles 918.02
Pipe Joint Sealant..... 907.11
Reinforcing Bars 910.01
Rubber Type Gaskets 907.13
Straps, Hook Bolts, and Nuts..... 908.12
Structure Backfill 904

* B borrow *or structure backfill* consisting of ACBF or GBF shall not be used within 2 ft of the free water level.

The maximum particle size of backfill material for corrugated pipe shall be less than 1/2 the corrugation depth.

(a) Type 1 Pipe

Type 1 pipe shall be used for culverts under mainline pavement and public road approaches and shall be in accordance with the following:

Clay Pipe, Extra Strength 907.08
Corrugated Aluminum Alloy Pipe and Pipe-Arches ..... [B]
Corrugated Polyethylene Pipe, Type S ..... [A]
Corrugated Polypropylene Pipe ..... [A]
Corrugated Steel Pipe and Pipe-Arches ..... [B]
Non-Reinforced Concrete Pipe, Class 3 ..... 907.01
Polymer Precoated Galvanized Corrugated Steel
Pipe and Pipe-Arches ..... [B]
~~Profile Wall Polyethylene Pipe, Closed..... [A]~~
~~Profile Wall Polyethylene Pipe, Ribbed ..... [A]~~
Profile Wall PVC Pipe..... [A]
Reinforced Concrete Horizontal Elliptical Pipe 907.03
Reinforced Concrete Pipe..... 907.02
~~Smooth Wall Polyethylene Pipe..... [A]~~
~~Smooth Wall PVC Pipe ..... [A]~~
Spiral Rib Steel Pipe ..... [B]
Structural Plate Pipe and Pipe-Arches..... 908.09

[A] ~~All t~~Thermoplastic pipes shall be from the QPL of Thermoplastic Pipe and Liner Pipe Sources in accordance with 907.16.

[B] Metal pipes shall be from the QPL of Metal Pipe Sources in accordance with 908.01.

(b) Type 2 Pipe

Type 2 pipe shall be used for storm sewers and shall be in accordance with the following:

Clay Pipe, Extra Strength 907.08
Corrugated Polyethylene Pipe, Type S ..... [A]
Corrugated Polypropylene Pipe ..... [A]
Fully Bituminous Coated and Lined Corrugated
Steel Pipe and Pipe-Arches..... [B]
Non-Reinforced Concrete Pipe, Class 3 ..... 907.01
Polymer Precoated Galvanized Corrugated Steel
Pipe and Pipe-Arches Type IA and Type IIA..... [B]
~~Profile Wall Polyethylene Pipe, Closed ..... A~~
~~Profile Wall Polyethylene Pipe, Ribbed ..... A~~
Profile Wall PVC Pipe..... [A]
Reinforced Concrete Horizontal Elliptical Pipe 907.03
Reinforced Concrete Pipe..... 907.02
~~Smooth Wall Polyethylene Pipe..... A~~
~~Smooth Wall PVC Pipe ..... A~~

[A] ~~All t~~Thermoplastic pipes shall be from the QPL of Thermoplastic Pipe and Liner Pipe Sources in accordance with 907.16.

[B] Metal pipes shall be from the QPL of Metal Pipe Sources in accordance with 908.01.

SECTION 715, BEGIN LINE 98, DELETE AND INSERT AS FOLLOWS:

(d) Type 4 Pipe

Type 4 pipe shall be used for drain tile and longitudinal underdrains and shall be in accordance with the following:

Clay Pipe*..... 907.08
Corrugated Polyethylene Drainage Tubing ..... [A]
Corrugated Polyethylene Pipe, Type S* ..... [A]
Corrugated Polyethylene Pipe, Type SP..... [A]
Drain Tile* 907.10
Non-Reinforced Concrete Pipe..... 907.01
Perforated Clay Pipe*..... 907.09
~~Perforated PVC Semicircular Pipe..... A~~
Profile Wall PVC Pipe..... [A]

[A] ~~All t~~Thermoplastic pipes shall be from the QPL of Thermoplastic Pipe and Liner Pipe Sources in accordance with 907.16.

* These materials shall be used for drain tiles only.

(e) Type 5 Pipe

Type 5 pipe shall be used for broken-back pipe runs where coupled or jointed pipe is desirable and shall be in accordance with the following:

Corrugated Aluminum Alloy Pipe and Pipe-Arches ..... [B]
Corrugated Polyethylene Pipe, Type S ..... [A]
Corrugated Polypropylene Pipe ..... [A]

Corrugated Steel Pipe and Pipe-Arches ..... [B]
Fully Bituminous Coated and Lined Corrugated
Steel Pipe and Pipe-Arches..... [B]
Polymer Precoated Galvanized Corrugated
Steel Pipe and Pipe-Arches..... [B]
~~Profile Wall Polyethylene Pipe, Closed..... [A]~~
~~Profile Wall Polyethylene Pipe, Ribbed ..... [A]~~
Profile Wall PVC Pipe..... [A]
~~Smooth Wall Polyethylene Pipe..... [A]~~
~~Smooth Wall PVC Pipe ..... [A]~~
Spiral Rib Steel Pipe ..... [B]

[A] ~~All t~~Thermoplastic pipes shall be from the QPL of Thermoplastic Pipe and Liner Pipe Sources in accordance with 907.16.

[B] Metal pipes shall be from the QPL of Metal Pipe Sources in accordance with 908.01.

SECTION 715, BEGIN LINE 148, DELETE AND INSERT AS FOLLOWS:

(h) End Bent Drain Pipe

End bent drain pipe shall be ~~perforated profile wall PVC pipe, perforated smooth wall PVC pipe, or corrugated polyethylene drainage tubing Type SP from the QPL of Thermoplastic Pipe and Liner Pipe Sources in accordance with 907.16.~~*one of the following:*

Pipe Material Type	*In accordance with:*
Corrugated Polyethylene Drainage Tubing, Type SP	*907.17(a)*
Perforated Profile Wall PVC	*907.22*
Perforated Smooth Wall PVC	*907.23*

(i) Underdrain Outlet Pipe

Pipe for underdrain outlets and drain tile outlets shall be ~~PSM PVC pipe, profile wall PVC pipe, smooth wall polyethylene pipe, or smooth wall PVC pipe from the QPL of Thermoplastic Pipe and Liner Pipe Sources in accordance with 907.16 and 907.24. Schedule 40 PVC pipe in accordance with 907.24(b) is also allowable.~~*one of the following:*

Pipe Material Type	*In accordance with:*
Profile Wall PVC	*907.22*
PVC Plastic Pipe, Schedule 40	*907.24(b)*
Smooth Wall Polyethylene	*907.21*
Smooth Wall PVC	*907.23*
Type PSM PVC	*907.24(a)*

(j) Grated Box End Sections

Grating for box end sections shall be in accordance with 910.22. Threaded inserts for Type II grated box end sections shall have a minimum pull-out capacity of 6,000 lb. The 1/2 in. round bolts shall have hex heads, cut washers, and where necessary, shall be furnished with the grating. The aggregate leveling bed required for precast units shall be

coarse aggregate No. 8 in accordance with 904.03.

The hardware cloth used to cover the weep holes ~~may~~*shall* be plastic with 1/4 in. mesh or galvanized steel wire No. 4 mesh with a minimum wire diameter of 1/32 in. It shall be firmly anchored to the outside of the structure and shall be centered on the holes.

A Type C certification in accordance with 916 shall be provided for the materials in this section unless otherwise specified.

SECTION 715, BEGIN LINE 186, DELETE AND INSERT AS FOLLOWS:

(m) Drainage Pipe through Concrete Masonry

Pipe used as drainage pipe through concrete masonry as described in 702.16 shall be ~~either profile wall or smooth wall PVC from the QPL of Thermoplastic Pipe and Liner Pipe Sources in accordance with 907.16, or steel in accordance with 908.1.~~*one of the following:*

Pipe Material Type	*In accordance with:*
Profile Wall PVC	*907.22*
Smooth Wall PVC	*907.23*
Steel	*908.11*

SECTION 715, BEGIN LINE 399, DELETE AND INSERT AS FOLLOWS:

After the visual or video inspection, the Contractor shall check pipe deflection by performing a mandrel test as directed on pipes manufactured from materials listed in the following table. The Engineer will determine the runs of pipe installations to be mandrel tested with a minimum of 10% of the total length of each material to be inspected.

PIPES REQUIRING MANDREL TESTING	
Pipe Material	Standard Specifications
Corrugated Polyethylene Pipe*	907.17(b)
Corrugated Polypropylene Pipe	907.19
~~Profile Wall Polyethylene Pipe~~	~~907.20~~
~~Smooth Wall Polyethylene Pipe~~	~~907.21~~
Profile Wall PVC Pipe*	907.22
~~Smooth Wall PVC Pipe~~	~~907.23~~
* When used as underdrain pipe, mandrel testing will not be required.	

SECTION 907, BEGIN LINE 212, DELETE AND INSERT AS FOLLOWS:

907.16 Thermoplastic Pipe Requirements

A QPL of Thermoplastic Pipe and Liner Pipe Sources will be maintained by the Department. The QPL will specify the manufacturer and thermoplastic pipe designation.

All of these materials shall comply with the applicable AASHTO or ASTM requirements listed in the following table and will only be accepted from qualified manufacturers. The manufacturer is defined as the plant which produces thermoplastic pipe. The manufacturer shall become qualified by establishing a history of satisfactory

quality control of these materials as evidenced by the test results performed by the manufacturer's testing laboratory.

SUMMARY OF THERMOPLASTIC PIPE SPECIFICATION REQUIREMENTS				
Pipe Material	**Standard Specification**	**AASHTO**	**ASTM**	**Manufacturer Requirement**
Corrugated Polyethylene Drainage Tubing	907.17(a)	M 252		ITM 806, Procedure O
Corrugated Polyethylene Pipe	907.17(b)	M 294*		ITM 806, Procedure O
Corrugated Polypropylene Pipe	907.19	M 330		ITM 806, Procedure O
Perforated PVC Semicircular Pipe	907.18		D3034	~~ITM 806, Procedure A~~*916, Type D certification*
Profile Wall HDPE Liner Pipe	907.25(b)		F894	~~ITM 806, Procedure A or~~ 916, Type A ~~C~~*c*ertification
Profile Wall PVC Liner Pipe	907.25(c)		F949	~~ITM 806, Procedure A or~~ 916, Type A ~~C~~*c*ertification
Profile Wall PVC Pipe	907.22 907.24(c)	M 304		ITM 806, Procedure O
Profile Wall Polyethylene Pipe	907.20		F894	~~ITM 806, Procedure A~~*916, Type D certification*
PVC Plastic Pipe, Schedule 40	907.24(b)		D1785	916, Type C ~~C~~*c*ertification
Slotted Vane Drain Pipe	908.14	M 278	F679	~~ITM 806, Procedure A~~*916, Type D certification*
Smooth Wall Polyethylene Pipe	907.21 907.24(d)		F714	~~ITM 806, Procedure A~~*916, Type D certification*
Smooth Wall PVC Pipe	907.23 907.24(e)	M 278	F679	~~ITM 806, Procedure A~~*916, Type D certification*
Solid Wall HDPE Liner Pipe	907.25(a)		F714	ITM 806, Procedure Q or 916, Type A ~~C~~*c*ertification
Type PSM PVC Pipe and Fittings	907.24(a)		D3034	~~ITM 806, Procedure A~~*916, Type D certification*
* Pipe in accordance with AASHTO M 294 shall be manufactured with virgin materials.				

SECTION 907, BEGIN LINE 238, DELETE AND INSERT AS FOLLOWS:

907.18 Perforated PVC Semicircular Pipe

Perforated PVC semicircular pipe may be used as an alternate to 6 in. or less

diameter pipe or tile. Pipe shall be in accordance with ASTM D3034, DR 35. This semicircular pipe shall have a smooth top and a smooth, semicircular bottom, nominally 4 5/8 in. in diameter, with perforations uniformly distributed along the top of the bottom section in accordance with AASHTO M 252 perforation requirements. The top section shall extend a minimum of 1/2 in. beyond the top of the semicircular section. The top section shall be approximately 6 3/8 in. wide including the sloping overhangs on each side. ~~Pipe will be considered for inclusion on the QPL by completing the requirements of ITM 806, Procedure A~~*A Type D certification in accordance with 916 shall be provided for the perforated PVC semicircular pipe.*

SECTION 907, BEGIN LINE 254, DELETE AND INSERT AS FOLLOWS:

907.20 Profile Wall Polyethylene Pipe

Pipe and fittings shall be either closed profile or ribbed open profile in accordance with ASTM F894. ~~Pipe will be considered for inclusion on the QPL by completing the requirements of ITM 806, Procedure A~~*A Type D certification in accordance with 916 shall be provided for the profile wall polyethylene pipe*.

907.21 Smooth Wall Polyethylene Pipe

Pipe shall be in accordance with ASTM F714 for nominal diameters of 39 in. or less. Fittings shall be in accordance with ASTM F1055. The pipe sizes shall be in accordance with ISO sizing system. The pipe DR shall be 26 or less. The resin used in manufacturing this type of pipe shall have a minimum cell classification of 335434C in accordance with ASTM D3350 or a minimum grade of PE4710 in accordance with ASTM F714. ~~Pipe will be considered for inclusion on the QPL by completing the requirements of ITM 806, Procedure A~~*A Type D certification in accordance with 916 shall be provided for the smooth wall polyethylene pipe*.

SECTION 907, BEGIN LINE 274, DELETE AND INSERT AS FOLLOWS:

907.23 Smooth Wall PVC Pipe

Pipe and fittings shall be in accordance with AASHTO M 278 for pipe sizes 4 in. through 15 in., and ASTM F679 for pipe sizes 18 in. through 27 in. ~~Pipe will be considered for inclusion on the QPL by completing the requirements of ITM 806, Procedure A~~*A Type D certification in accordance with 916 shall be provided for the smooth wall PVC pipe.*

907.24 Pipe for Outlets

Pipe and pipe fittings used for outlets shall be smooth interior wall, unperforated plastic pipe.

(a) Type PSM PVC Pipe and Fittings

Pipe and fittings shall be in accordance with ASTM D3034, DR 23.5. ~~Pipe will be considered for inclusion on the QPL by completing the requirements of ITM 806, Procedure A~~*A Type D certification in accordance with 916 shall be provided for the type PSM PVC pipe and fittings*.

SECTION 907, BEGIN LINE 306, DELETE AND INSERT AS FOLLOWS:

907.25 Thermoplastic Liner Pipe

Thermoplastic liner pipe shall be HDPE or PVC pipe with sufficient rigidity to withstand the installation operation and shall exhibit a minimum amount of distortion. The

liner pipe shall be free from visible cracks, holes, foreign inclusions, or other defects.~~ Liner pipe shall be either from the QPL or a Type A certification in accordance with 916 shall be provided for the liner pipe. The results of the tests listed in ITM 804 shall be shown on the certification.~~

(a) Solid Wall HDPE Liner Pipe

Solid wall HDPE liner pipe shall be in accordance with ASTM F714. *Solid wall HDPE liner pipe shall either be selected from a source listed on the QPL of Thermoplastic Pipe and Liner Pipe Sources or a Type A certification in accordance with 916, with the results of the tests listed in ITM 804 shown on the certification, shall be provided for the liner pipe.* The maximum SDR as defined in ASTM F412 for the liner pipe shall be 32.5. The actual calculated minimum DR as defined in ASTM F412 for the liner pipe shall be 30.0. The resin used in the manufacture of the liner pipe shall have a minimum cell classification of 345464C in accordance with ASTM D3350 or a minimum grade of PE4710 in accordance with ASTM F714. A 12 in. section of the liner pipe shall show no evidence of splitting, cracking, or breaking when compressed between parallel plates to 40% of its outside diameter within 2 to 5 minutes. Thermoplastic liner pipe will be considered for inclusion on the QPL by completing the requirements of ITM 806, Procedure Q.

(b) Profile Wall HDPE Liner Pipe

Profile wall HDPE liner pipe shall be in accordance with ASTM F894. *A Type A certification in accordance with 916, with the results of the tests listed in ITM 804 shown on the certification, shall be provided for the liner pipe.* The minimum liner ring stiffness constant, RSC, shall be 160 for circular installations and 250 for deformed installations. ~~Thermoplastic liner pipe will be considered for inclusion on the QPL by completing the requirements of ITM 806, Procedure A.~~

(c) Profile Wall PVC Liner Pipe

Profile wall PVC liner pipe shall be in accordance with ASTM F949. ~~Thermoplastic liner pipe will be considered for inclusion on the QPL by completing the requirements of ITM 806, Procedure A.~~*A Type A certification in accordance with 916, with the results of the tests listed in ITM 804 shown on the certification, shall be provided for the liner pipe.*

720-R-646 CURB INLET CASTING

(Revised 05-01-25)

The Standard Specifications are revised as follows:

SECTION 910, AFTER LINE 444, INSERT AS FOLLOWS:

Where a 6 in. curb height is specified, a monolithic frame and curb box may be used in place of one with modular components, provided the monolithic casting's dimensions match those shown on the plans.

801-C-157 CERTIFICATION OF TEMPORARY TRAFFIC CONTROL DEVICES

(Revised 05-23-13)

Category I Devices

The Contractor shall certify that the following temporary traffic control devices to be used do not exceed the maximum values shown in the table below and are considered crashworthy at Test Level 3 in accordance with NCHRP 350.

Device	Composition	Max. Weight	Max. Height
Single Piece Traffic Cones	Rubber	20 lb	36 in.
	Plastic	20 lb	48 in.
Tubular Markers	Rubber	13 lb	36 in.
	Plastic	13 lb	36 in.
Single Piece Drums	High Density Plastic	77 lb	36 in.
	Low Density Plastic	77 lb	36 in.
Delineators	Plastic, Fiberglass	N/A	48 in.

No lights, signs, flags, or other auxiliary attachments are included in the weight of the devices listed above. Reflective sheeting or reflective buttons are included on delineators. Maximum weights, including ballast, do not exceed the values shown in the table. "Single piece" refers to the construction of the body of the drum exclusive of a separate base, if any.

Type A or Type C warning lights in accordance with the following specifications will be allowed on drums if they are firmly attached with vandal resistant 1/2 in. diameter by 4 in. cadmium plated steel bolt with nut and a 1 1/2 in. high cup washer.

1. The weight shall be no more than 5 lb.

2. The lens diameter shall be 7 to 8 in.

3. The height of the light shall be 11 to 14 in.

Category II Devices

Category II temporary traffic control devices include Type III barricades, vertical panels, portable sign standards, and other light-weight traffic control devices.

Category II temporary traffic control devices shall be in accordance with the NCHRP 350, Test Level 3.

A form will be provided at the pre-construction conference for the Contractor to complete and return to the Engineer prior to the placement of Category I or Category II traffic control devices.

801-T-211d PORTABLE SIGNAL INSPECTION CHECKLIST

(Adopted 12-17-15)

Contractor:	**Date of Inspection:**	**Inspector:**

Project Number:	**Manufacturer of PTS:**
Project Location:	
Contact Name & Phone:	

Components included in Inspection

Unit VIN	Description	Serial Number

Battery Components	Yes	No
1. Wiring is in good condition		
2. All fuses & breakers in good condition and working order		
3. All Fuses are identified		
4. Chassis is grounded		
5. Ground and breaker switch stickers are identified and labeled		
6. Battery terminals are free of corrosion and making good contact with battery cables		
7. Lid latches and access points are in good working order and functioning properly		
8. Battery charger is operational		

Solar Components	Yes	No
1. Solar panels arrays are secure for transport		
2. Solar controller is in good working order are secure		
3. Solar controller voltage reading:		
4. Solar panels are secured tightly in frames		
5. Solar panels are functional		

Signal Indications	Yes	No
1. Light housing color is correct		
2. Lights are mounted securely on system		
3. All LEDs are operational		
4. Light shields have all screws and are fastened tight		

5. Light doors are shut, and screws are secure		
6. All exposed inputs are free of corrosion and in good working order		
7. Back Plates, associated screws and brackets are secure and undamaged		
8. All junction boxes are secure and in good condition		
9. Over light extension is in good working order		

Operating System	Yes	No
1. Operating System successfully runs a signal program		
2. Malfunction Function Management System verified be activating a default		
3. All connection free of corrosion and in good working order		
4. Verify that controller is indicating the correct date and time		

Wireless Communications	Yes	No
1. Radios in good condition and free of corrosion		
2. Communication between signal trailers verified		
3. Radio Antennas in good condition and secure		

Controller Cabinet	Yes	No
1. The controller cabinet is in good condition and connections are secure		
2. Signal manufacture's decal with emergency contact information is visible and readable		
3. Operational Manual and troubleshooting guide are included with the system		

System Testing	Yes	No
1. Portable traffic signal system is functioning correctly		
2. Tire pressure is correct on trailers and lug nuts are secure		
3. All securing pins and latches are in place and in good working order		
4. All marker lights, brake and turn lights are functioning properly		
5. Maximum towing speed is clearly marked on each tongue		
6. All pinch points are clearly marked with a warning label		
7. Each trailer is equipped with an "Overhead Wires" warning label		

Accepted for Use	Yes	No
Unit VIN:		
Unit VIN:		
Unit VIN:		
Unit VIN:		

Inspector: Date:

801-T-212 TEMPORARY SIGNAL TIMING PLAN

(Adopted 12-17-15)

Roadway: Harmonie State Park Road Contract No.:ENG2701728041 Official Action #: N/A

Controller Type: ☐ Temporary Traffic Signal ☒ Portable Traffic Signal

Roadway Operation: ☐ Pre-Timed ☐ Semi-Actuated ☒ Fully Actuated

Preemption: ☒ None ☐ Railroad ☐ Emergency Vehicle

Interconnection: ☒ None ☐ Radio ☐ Fiber-Optic ☐ Other

Pedestrian Phasing: ☐ Yes ☒ No

Phase Diagram

☒ Two Phase

1 NB	**2** SB

☐ Four Phase

1 -	**2** -
3 -	**4** -

☐ Eight Phase

1 -	**2** -	**3** -	**4** -
5 -	**6** -	**7** -	**8** -

Signal Timing Parameters

Phase Number	1	2						
Minimum Green	15	15						
Yellow	5	5						
All Red	41	41						
Max. Green 1	85	85						
Max. Green 2								

Other Instructions: The noted timing parameters are based on estimated peak hour directional volumes. The contractor is responsible for in-field adjustments to minimize queues, and place work zone signage such that drivers are warned of potential traffic upstream of observed worse-case queuing.

Detection for the temporary signal shall be wireless microwave radar capable of per-vehicle tracking up to 500' from the unit, in order to provide dilemma zone protection. The same detector unit shall also provide basic stop bar presence calls to the controller for actuation of the respective phase. Mounting height, physical detection unit configuration, software setup, power/communication cabling, and cabinet

hardware/terminals shall be provided per manufacturer recommendations. The temporary signal shall be equipped with a clearance time extension module, to extend the all-red time if needed due to slow moving vehicles.

All phases shall be programmed with min recall.

Signals On:	All Red
Signals Flash:	All Red

Prepared by: DAS
Title: Designer

XW20-1A (36"x36")
XW20-1 (48"x48")
XW20-1-A (60"x60")

XG20-2 (60"x24")

OBSOLETE SIGNS

XW20-1A (36"x36")
XW20-1 (48"x48")
XW20-1-A (60"x60")

XG20-2A (36"X18")
XG20-2 (48"x24")

REPLACEMENT SIGNS

NOTES:

1. The XW20-1 and XG20-2 series signs depicted in the following Standard Drawings shall be superseded by the replacement signs shown on this sheet and further detailed in the FHWA Standard Highway Signs, 2024 edition.

713-TCTR-03	801-TCSC-02
801-TCCO-01	801-TCSC-03
801-TCFO-02	801-TCSC-04
801-TCFO-03	801-TCSC-05
801-TCFO-04	801-TCSC-06
801-TCFO-05	801-TCTC-02
801-TCFO-06	801-TCTC-03
801-TCLC-02	801-TPAR-02
801-TCLC-03	801-TPAR-03
801-TCLC-04	801-TPAR-04
801-TCLC-05	801-TPAR-05
801-TCLC-06	801-TPAR-06
801-TCLC-07	801-TPAR-07
801-TCLC-08	801-TPAR-08
801-TCLC-09	801-TPAR-09
801-TCLC-10	
801-TCLC-11	
801-TCLC-12	

2. A "ROAD CONSTRUCTION AHEAD" or "ROAD CONSTRUCTION X FT" sign shown on the plans shall be replaced with a "ROAD WORK AHEAD" or "ROAD WORK X FT" sign.

3. An "END CONSTRUCTION" sign shown on the plans shall be replaced with an "END ROAD WORK" sign.

INDIANA DEPARTMENT OF TRANSPORTATION

ROAD CONSTRUCTION AND
ROAD WORK AHEAD SIGNS
Sheet 01 of 01

Eff. for Letting On or After 03-01-2026

801-T-246 ROAD WORK AHEAD SIGNS

(Adopted 10-16-25)

The Standard Specifications are revised as follows:

SECTION 619, BEGIN LINE 119, DELETE AND INSERT AS FOLLOWS:

Construction signs in accordance with 801.04 shall be furnished and placement at each project site shall be as shown in the QCP. However, a "Bridge Painting Ahead" sign may be used in place of the "Road ~~Construction~~*Work* Ahead" sign.

SECTION 801, BEGIN LINE 233, DELETE AND INSERT AS FOLLOWS:

(a) Type A

A Type A sign shall consist of a construction sign as detailed in the MUTCD or on the standard drawings which is ~~9~~*8* sq ft or more in area.

(b) Type B

A Type B sign shall consist of a construction sign as detailed in the MUTCD or on the standard drawings which is less than ~~9~~*8* sq ft in area.

(c) Type C

A Type C sign shall consist of a construction sign which is not detailed in the MUTCD or on the standard drawings and which is ~~9~~*8* sq ft or more but less than 33 sq ft in area.

(d) Type D

A Type D sign shall consist of a construction sign which is not detailed in the MUTCD or on the standard drawings and which is less than ~~9~~*8* sq ft.

904-M-073 AGGREGATES

(Revised 04-16-26)

The Standard Specifications are revised as follows:

SECTION 904, BEGIN LINE 3, DELETE AS FOLLOWS:

904.01 Aggregates

Aggregates shall consist of natural or manufactured materials produced from but not limited to limestone, dolomite, gravels, sandstones, ~~steel furnace slag,~~ SF, ~~air cooled blast furnace slag,~~ ACBF, ~~granulated blast furnace,~~ GBF, wet bottom boiler slag, or other geologic rock types approved by the Engineer.

SECTION 904, BEGIN LINE 24, DELETE AND INSERT AS FOLLOWS:

Aggregates, except those used for precast concrete units*,* ~~or~~ fine aggregates used for snow and ice abrasive, *or lightweight aggregates used in geotechnical applications,* shall be supplied by a Certified Aggregate Producer in accordance with 917. Structure backfill may be obtained from a non-CAPP source in accordance with 211.02. SF for SMA mixtures ~~shall~~*will* also require the following:

SECTION 904, BEGIN LINE 76, INSERT AS FOLLOWS:

When slag is furnished as an aggregate, the approximate quantity of tons to be supplied will be determined by multiplying the *contract* pay item quantity of tons by the specific gravity of slag divided by 2.6. The adjusted contract *pay item* quantities will be determined by multiplying the accepted quantity of tons by 2.6 divided by the specific gravity of the slag.

SECTION 904, BEGIN LINE 207, DELETE AS FOLLOWS:

(a) Classification of Aggregates

Characteristic Classes	AP	AS	A	B	C	D	E	F
Quality Requirements:								
Freeze and Thaw Beam Expansion, % max. (Note 1)	.060							
Los Angeles Abrasion, % max. (Note 2)	40.0	30.0	40.0	40.0	45.0	45.0	50.0	
Freeze and Thaw, AASHTO T 103, Procedure A, % max. (Note 3)	12.0	12.0	12.0	12.0	16.0	16.0	20.0	25.0
Sodium Sulfate Soundness, % max. (Note 3)	12.0	12.0	12.0	12.0	16.0	16.0	20.0	25.0
Brine Freeze and Thaw Soundness, % max. (Note 3)	30	30	30	30	40	40	50	60
Absorption, % max. (Note 4)	5.0	5.0	5.0	5.0	5.0			
Additional Requirements:								
Deleterious, % max.								
Clay Lumps and Friable Particles	1.0	1.0	1.0	1.0	2.0	4.0		

Non-Durable (Note 5)	4.0	2.0	4.0	4.0	6.0	8.0		
Coke					(See Note 6)			
Iron					(See Note 6)			
Chert (Note 7)	3.0	3.0	3.0	5.0	8.0	10.0		
Weight per Cubic Foot for Slag, lb, min.	75.0		75.0	75.0	70.0	70.0	70.0	
Crushed Particles, % min. (Note 8)								
Compacted Aggregates			20.0	20.0	20.0	20.0		

Notes:

1. Freeze and thaw beam expansion shall be tested and re-tested in accordance with ITM 210.

2. Los Angeles abrasion requirements shall not apply to BF.

3. Aggregates may, at the option of the Engineer, be accepted by the Sodium Sulfate Soundness or Brine Freeze and Thaw Soundness requirements.

4. Absorption requirements apply only to aggregates used in PCC and HMA mixtures except they shall not apply to BF. When crushed stone coarse aggregates from Category I sources, in accordance with ITM 203, consist of production from ledges whose absorptions differ by more than two percentage points, the absorption test will be performed every three months on each size of material proposed for use in PCC or HMA mixtures. Materials having absorption values between 5.0 and 6.0 that pass AP testing may be used in PCC. If variations in absorption preclude satisfactory production of PCC or HMA mixtures, independent stockpiles of materials will be sampled, tested, and approved prior to use.

5. Non-durable particles include: a) soft particles as determined by ITM 206, b) other particles which are structurally weak, such as soft sandstone, shale, limonite concretions, coal, weathered schist, cemented gravel, ocher, shells, and wood, and c) other objectionable material. Determination of non-durable particles shall be made from the total weight (mass) of material retained on the 3/8 in. (9.5 mm) sieve. Scratch Hardness Test shall not apply to crushed stone coarse aggregate.

6. ACBF and SF coarse aggregate shall be free of objectionable amounts of coke, iron, and lime agglomerates.

7. The bulk specific gravity of chert shall be based on the saturated surface dry condition. The amount of chert less than 2.45 bulk specific gravity shall be determined on the total weight (mass) of material retained on the 3/8 in. (9.5 mm) sieve for sizes 2 through 8, ~~43,~~ 53, and 73 and on the total weight (mass) of material retained on the No. 4 (4.75 mm) sieve for sizes 9, 11, 12, and 91.

8. Crushed particle requirements apply to gravel coarse aggregates used in compacted aggregates. Determination of crushed particles shall be made from the weight (mass) of material retained on the No. 4 (4.75 mm) sieve in accordance with ASTM D5821.

SECTION 904, BEGIN LINE 275, DELETE AS FOLLOWS:

(e) Sizes of Coarse Aggregates

Sieve Sizes	COARSE AGGREGATE SIZES (Percent Passing)											
	Coarse Graded										**Dense Graded**	
	2	**5**	**8**	**9**	**11,**	**12,**	**SC 16(5)**	**~~43~~(4)**	**91**	**93PG(6)**	**53(1)**	**73(1)**

					SC 11[5]	SC 12[5]						
4 in. (100 mm)												
3 1/2 in. (90 mm)												
2 1/2 in. (63 mm)	100											
2 in. (50 mm)	80 - 100											
1 1/2 in. (37.5 mm)		100						~~100~~			100	
1 in. (25 mm)	0 - 25	85 - 98	100					~~70 - 90~~	100		80 - 100	100
3/4 in. (19 mm)	0 - 10	60 - 85	75 - 95	100				~~50 - 70~~			70 - 90	90 - 100
1/2 in. (12.5 mm)	0 - 7	30 - 60	40 - 70	60 - 85	100	100	100	~~35 - 50~~		98 - 100	55 - 80	60 - 90
3/8 in. (9.5 mm)		15 - 45	20 - 50	30 - 60	75 - 95	95 - 100	94 - 100			75 - 100		
No. 4 (4.75 mm)		0 - 15	0 - 15	0 - 15	10 - 30	50 - 80	15 - 45	~~20 - 40~~		10 - 60	35 - 60	35 - 60
No. 8 (2.36 mm)		0 - 10	0 - 10	0 - 10	0 - 10	0 - 35		~~15 - 35~~		0 - 15	25 - 50	
No. 16 (1.18 mm)							0 - 4					
No. 30 (600 µm)						0 - 4		~~5 - 20~~		0 - 5	12 - 30	12 - 30
No. 200 (75 µm)[2]								~~0 - 6.0~~			5.0 - 13.0[4]	5.0 - 12.0
Decant (PCC)[3]		0 - 1.5	0 - 1.5	0 - 1.5	0 - 1.5	0 - 1.5			0 - 1.5			
Decant (Non-PCC)	0 - 2.5	0 - 2.5	0 - 3.0	0 - 2.5	0 - 2.5	0 - 2.0			0 - 2.5	0 - 2.0		
Decant (SC)					0 - 1.5	0 - 1.5	0 - 1.5					

(1) The liquid limit shall not exceed 25 (35 if slag) and the plasticity index shall not exceed 5. The liquid limit shall be determined in accordance with AASHTO T 89 and the plasticity index in accordance with AASHTO T 90.

(2) Includes the total amount passing the No. 200 (75 µm) sieve as determined by AASHTO T 11 and AASHTO T 27.

(3) Decant may be from 0 to 2.5 for stone and slag.

(4) When slag is used for separation layers as defined in 302.01, the total amount passing the No. 200 (75 µm) sieve shall be 10.0 to 12.0.

(5) Seal coat (SC) aggregates shall be 85% one face and 80% two face crushed. The Flakiness Index in accordance with ITM 224 shall be a maximum of 25%.

(6) Pea gravel shall be generally uncrushed gravel, with a maximum of 20% crushed particles, and shall meet the gradation requirements of 93PG. Determination of crushed particles shall be made from the weight (mass) of material retained on the No. 4 (4.75 mm) sieve in accordance with ASTM D5821.

SECTION 904, BEGIN LINE 395, DELETE AS FOLLOWS:

(c) Exceptions to AASHTO T 27 for *Fine and* Coarse Aggregates

The *dry mass* size of test samples for coarse *and fine* aggregate shall be as follows:

Aggregate Size	**Mass of Test Sample**
No. 2	11.3 kg min.
No. 5, 8, ~~43,~~ 53, 73, and 91	6.0 - 8.0 kg
No. 9	4.0 - 6.0 kg
No. 11	*2.0 kg min.*
No. 12 and No. 16	*1.0 kg min.*
No. 23 and No. 24	*300 g min.*
Structure Backfill	
2 in.	11.3 kg min.
1 1/2 in. and 1 in.	6.0 - 8.0 kg
1/2 in.	4.0 - 6.0 kg
No. 4 and No. 30	300 g *min.*

911-M-074 WOOD MATERIALS

(Adopted 11-19-25)

The Standard Specifications are revised as follows:

SECTION 701, BEGIN LINE 804, DELETE AND INSERT AS FOLLOWS:

701.13 Cut-Off Lengths

~~The tops of all steel pile shall be cut off at the elevation shown on the plans. All unused cut-off lengths shall become the property of the Contractor and shall be removed from the project site.~~

~~The length of timber pile above the elevation of cut-off shall be sufficient to enable the complete removal of all material injured by driving. Immediately after making final cut-off on treated timber foundation piles, the cut area shall be treated with copper naphthenate *or any other wood preservative pesticide* in accordance with AWPA Standard M4.~~

~~Timber piling supporting timber structures where the piles are cut off, but not concrete capped, shall be treated with copper naphthenate *or any other wood preservative pesticide* in accordance with AWPA Standard M4. A layer of saturated building felt or fiberglass cloth which overlaps the side of the pile at least 2 in. shall be securely fastened and completely covered with 20 gauge thick galvanized metal or aluminum sheeting. All cuts, injuries, and holes, which occur from removal of nails or spikes that penetrate the treating zone as well as bolt holes for connections, shall be treated by applying coal-tar roof cement in accordance with ASTM D5643.~~

SECTION 712, BEGIN LINE 61, INSERT AS FOLLOWS:

~~All cuts in treated piles or timber, all abrasions, after having been trimmed, and all holes for bolts or other appurtenances shall be field-treated with copper naphthenate *or any other wood preservative pesticide* in accordance with AWPA Standard M4. Insofar as practicable, cutting, framing, and boring of timber to be treated, except pile cut-offs, shall be done before treatment.~~

SECTION 712, BEGIN LINE 95, INSERT AS FOLLOWS:

712.04 Caps

~~Timber caps shall have an even and uniform bearing over the tops of supporting posts or piles and shall have their ends evenly aligned. All caps shall be secured by drift bolts of no less than 3/4 in. in diameter extending at least 9 in. into the approximate center of posts or piles. Pile heads, after being cut to receive the caps and prior to placing the caps, shall be treated with copper naphthenate *or any other wood preservative pesticide* in accordance with AWPA Standard M4 to prevent decay.~~

SECTION 911, BEGIN LINE 110, INSERT AS FOLLOWS:

911.02 Treated Lumber

(a) General

Treated lumber shall be preservative-treated by pressure processes in accordance with AWPA standards T1 and U1 or AASHTO M 133. Other AWPA standards applying to specific items are set out in 911.02(b), 911.02(c), 911.02(e), *911.02(f),* and 911.02(g).

Lumber to be treated shall be in accordance with 911.01, except as modified in 911.02(b), 911.02(c), and 911.02(e). The lumber may be inspected at the treating plant. Preservatives shall be in accordance with 911.02(h). Wherever ammoniacal or alkaline copper quat azole or wherever copper preservative is utilized, only stainless steel or hot-dipped galvanized fasteners and hardware shall be used. Galvanizing for fasteners shall be in accordance with ASTM A153. Galvanizing for hardware shall be in accordance with ASTM A653, coating designation G185. Fasteners and hardware in contact with one another shall be of the same base material and coating if applicable, and shall be used consistently throughout the treated wood article or structure.

SECTION 911, BEGIN LINE 257, DELETE AND INSERT AS FOLLOWS:

j. Penetration

The penetration requirements shall be in accordance with AWPA Standard T1, *Commodity Specification B,* table B6*, for round, half-round, and quarter-round posts*. *For sawn posts, including guardrail posts and blocks, assay zones and penetration requirements shall be in accordance with AWPA Standard T1, Commodity Specification A, tables 11 and 12.*

k. Inspection After Treatment

Following treatment, the charge shall be physically inspected in accordance with AWPA Standard M2, section 4. All treated material shall bear the quality mark of ~~the~~*an ALSC-accredited* inspection agency. All inspections shall be completed at no cost to the Department.

All non-compliant material shall be removed from the remaining acceptable material before shipment.

SECTION 911, BEGIN LINE 295, INSERT AS FOLLOWS:

4. Field Treatment of Posts and Blockouts

Cuts, holes, or injuries to the surface of posts and blockouts which occur after pressure treatment shall be field treated with copper naphthenate *or any other wood preservative pesticide* in accordance with AWPA Standard M4.

SECTION 911, BEGIN LINE 326, INSERT AS FOLLOWS:

(g) Recreational Applications

Lumber and timber that will be used in facilities where human contact will occur, such as handrails, pedestrian facilities including decking and picnic tables, shall be treated in accordance with AWPA standards U1 or UC4A, or AASHTO M 133. *All treated lumber and timber shall bear the quality mark of an ALSC-accredited inspection agency, or be certified for treatment by such an agency.*

A Type C certification in accordance with 916 shall be provided for the lumber/timber.

ARTICULATED CONCRETE BLOCK

Description

This work shall consist of furnishing and installing a precast articulated concrete block revetment, ACBR, system in accordance with 105.03.

Materials

Materials shall be in accordance with the following:

Geotextiles.....981.02
Concrete Block.....ASTM D6684-04
Cable and Fittings.....ASTM D6684-04

The Contractor shall utilize a precast articulated concrete block system. This shall be a system of concrete blocks laterally and longitudinally cabled into a prefabricated mat placed over geotextile. The blocks may also be longitudinally cabled together with a side pattern for interlocking with an adjacent row of blocks. The system shall consist of all open cells. Open cell systems shall have a minimum of 15% open area.

Concrete block shall be manufactured by a certified precast concrete producer.

A type "A" certification in accordance with 916 shall be provided for the precast articulated concrete block system. The certification shall include the following tests and results:

The precast concrete blocks shall have a minimum compressive strength of 4000 psi for an average of three units. Water absorption shall be limited to a maximum 9.1 lbs/cu ft for an average of three units. Units shall be sampled and tested in accordance with ASTM D6684-04, Standard Specification for Materials and Manufacture of Articulating Concrete Block Revetment Systems.

Cables and fittings shall be as recommended by the manufacturer and shall meet the following criteria:

In cable-tied ACBR systems, the cables shall be stainless steel, galvanized steel, or polyester. Selection of cable and fittings shall be in accordance with ASTM D6684-04.

A type "A" Certification in accordance with 916 shall be provided for the cable used to connect concrete blocks prior to installation.

Soil anchor stakes for the Articulated Concrete Block system shall be in accordance with the manufacturer's recommendations. A type "C" certification in accordance with 916 shall be provided for soil anchors prior to installation. The certification shall state that the soil anchor stakes meet the testing requirements set out in the Articulated Concrete Block system manufacturer's recommendations.

Submittals

The Contractor shall submit the following information to the Engineer at least 21 days prior to commencing Articulated Concrete Block system construction:

(a) Type and source of the selected Articulated Concrete Block system.
(b) Type and source of cables and fittings.
(c) Type and source of anchor system.
(d) Construction method and sequence.
(e) A copy of the articulated concrete manufacturer's specifications and literature including material and installation recommendations and instructions.
(f) Working and installation drawings, stamped by a professional engineer, specific for the project for the fabrication of the Articulated Concrete Block system, and installation recommendations, as applicable, specifically related to the project.

Construction Requirements

Excavation for the Articulated Concrete Block system shall be in accordance with 203 and as shown on the plans. Excavation for blocks toed in for anchors shall be made to the neat lines as shown on the plans.

Geotextile fabric shall be placed in accordance with 616.11 on the subgrade prior to placing the Articulated Concrete Block system.

Articulated Concrete Block systems shall be placed side by side, fastened together and anchored to provide one homogeneous erosion protection system. The mats shall arrive at the jobsite assembled according to lengths and widths as specified on the working drawings.

The cost of design, testing, grading, compaction, excavation, fill and all labor, materials, cable and fittings, all incidentals, and equipment required to furnish and install the Articulated Concrete Block system shall be included in the cost of the system.

PORTABLE TRAFFIC SIGNALS

Portable temporary traffic signal requirements mandate that units come from the INDOT Approved Materials List shown below, comply with the Indiana Manual on Uniform Traffic Control Devices, and operate with wireless vehicle detection and solar/battery power.

PORTABLE TRAFFIC SIGNALS

Specification Reference: 801.15(d) SM Material Code: 923M00010

Source Code	Manufacturer Model Number	Approval Number	Comments
TS0089	JOHN THOMAS, INC. ADDCO PTS 2000	W169231	
TS0094	HORIZON SIGNAL TECHNOLOGIES SQ3TS	W169232	
TS0156	NORTH AMERICA TRAFFIC, INC. PTL 2.4x	W199231	MODEL IS LIMITED TO MICROWAVE OR VIDEO DETECTION
TS0155	OMJC SIGNAL POP-UP LIGHT DUTY PORTABLE SIGNAL	W179235	
TS0167	SUPERIOR TRAFFIC SERVICES PTS-1000A	W219201	MODEL IS LIMITED TO MICROWAVE OR VIDEO DETECTION AND MANUFACTURER CONTROLS UNITS REMOTELY
TS0095	VER-MAC, INC. TLD-3612G2	W169233	MODEL DOES NOT ACCOMMODATE PROTECTED TURN MOVEMENTS

ALTERNATIVE TRAFFIC CONTROL PLAN

The Contractor will be allowed to submit an alternative traffic control plan for review and approval. The alternative traffic control plan shall comply with the Manual on Uniform Traffic Control Devices (MUTCD). The Contractor shall receive approval of the alternative traffic control plan from IDNR prior to field implementation.