AMERECO, INC.
CONSULTING • ENGINEERING • PROJECT MANAGEMENT
MORE THAN 30 YEARS OF EXCEPTIONAL SERVICE

February 15, 2022

Jenny Orsburn, Program Manager
Lake Michigan Coastal Program
Indiana Department of Natural Resources
Indiana Dunes State Park Annex Office
1600 North 25 East
Chesterton, IN 46304
219-983-9912
JeOrsburn@dnr.IN.gov

Re: EZ Dock ADA Accessible Kayak/Canoe Pull-Thru Launch at Wolf Lake Memorial Park
2408 Calumet Avenue
Hammond, IN 46320
Federal Consistency Determination Request

Dear Jenny Orsburn:

The City of Hammond's Department of Community Development plans on allocating U.S. Department of Housing and Urban Development (HUD) funds towards the installation of a new American Disability Act (ADA) accessible kayak and canoe pull-thru launch at Wolf Lake Memorial Park (Site). Under HUD regulation 24 CFR 58.58, the City of Hammond has assumed HUD's Environmental Review responsibilities for the project, including compliance with the State Coastal Zone Management (CZM) Program (24 CFR 58.22). Amereco Inc. is assisting the City of Hammond with preparation of the Environmental Review. Enclosed is information and materials to assist you in determining as to whether the project described below is consistent with the approved State CZM Program.

| | |
|---|---|
| Project Area/Site: | Wolf Lake Memorial Park |
| Source of HUD Funds: | 14.218 Community Development Block Grants/ Entitlement Grants (Housing and Community Development Act of 1974, Title I, as amended, 42 U.S.C. 5301-5317) |
| Description of Proposed Project: | This undertaking will consist of installing a new American Disability Act (ADA) accessible kayak and canoe pull-thru launch at Wolf Lake Memorial Park. |
| Scope of Work: | Installation and anchoring of a new EZ Dock ADA Accessible Kayak/Canoe Pull-Thru Launch.<br><br>The dock will feature an ADA complaint Aluminum Gangway 5' x 32', with a dock surface of 10' x 26', and a pull thru ADA Kayak Launch 5' x 40' or approved equivalent.<br><br>Site protection and warning signs for trail users will be on display during construction. |
| Projected Start Date: | Spring 2022 |
| Projected Duration: | 6 weeks |
| Projected Completion Date: | Spring/Summer 2022 |

Drawings and documentation provided by EZ Dock are enclosed for reference.

The proposed activity complies with Indiana's approved coastal management program and will be conducted in a manner consistent with such program.

Please contact me if you have any questions or need additional information.

Sincerely,

Krista Rose
Project Manager
Amereco Inc.
219.531.0531
krose@amerecoeng.com

Enclosures
- Project Location Map
- Site Photographs
- EZ Dock Documentation

# Project Location
# EZ Dock ADA Accessible Kayak/Canoe Pull-Thru Launch at Wolf Lake Memorial Park
# Hammond, IN

# Aerial Extent of Wolf Lake Memorial Park
# EZ Dock ADA Accessible Kayak/Canoe Pull-Thru Launch at Wolf Lake Memorial Park
# Hammond, IN

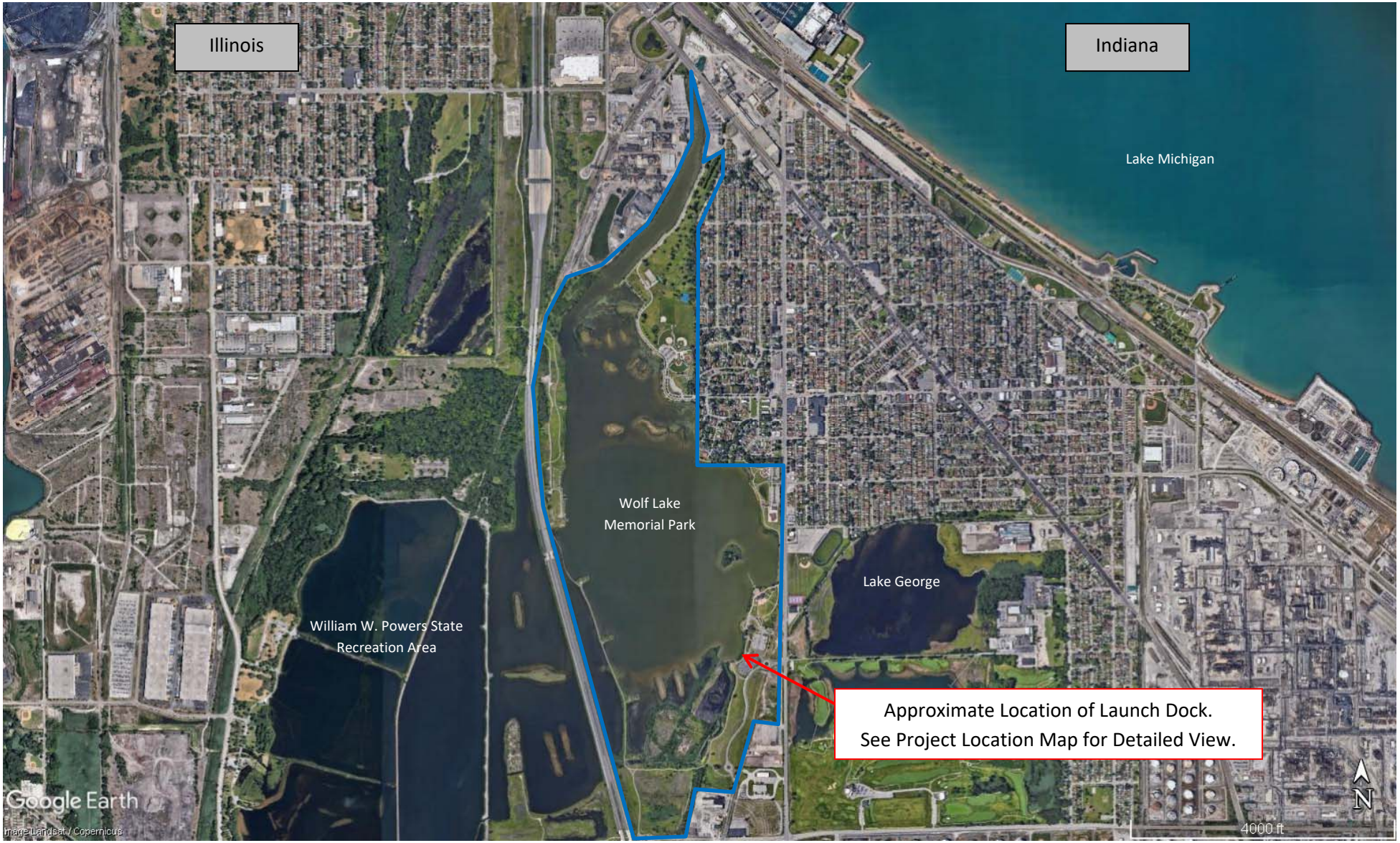

# Aerial Extent of Wolf Lake Memorial Park
# EZ Dock ADA Accessible Kayak/Canoe Pull-Thru Launch at Wolf Lake Memorial Park
# Hammond, IN

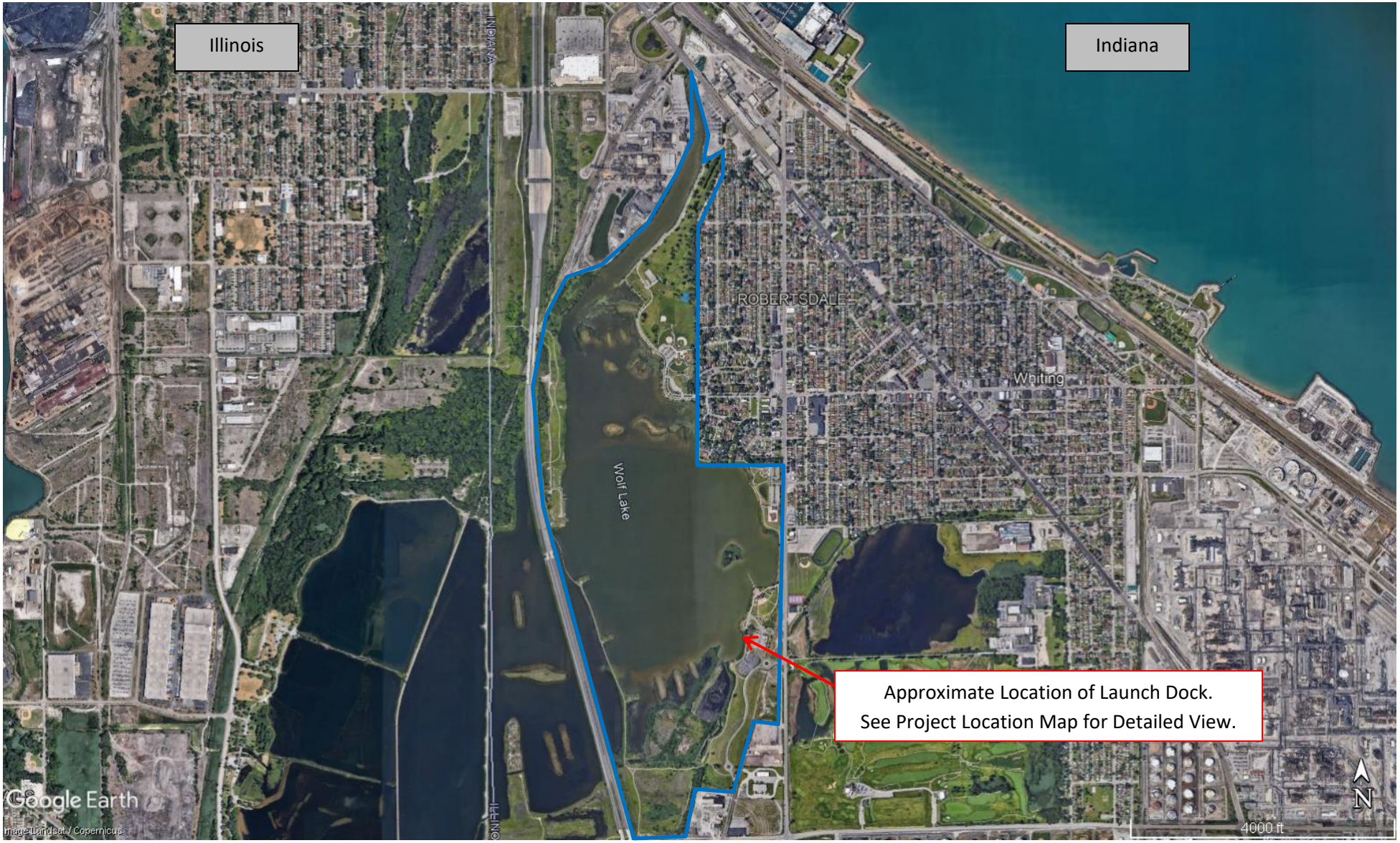

# EZ Dock ADA Accessible Kayak/Canoe Pull-Thru Launch at Wolf Lake Memorial Park
## Site Photographs – 2/11/2022

Approximate Location of Launch, Looking North

Approximate Location of Launch, Looking South

EZ Dock ADA Accessible Kayak/Canoe Pull-Thru Launch at
Wolf Lake Memorial Park
Site Photographs – 2/11/2022

Lake Northwest of Launch Location

Lake Southwest of Launch Location

EZ Dock ADA Accessible Kayak/Canoe Pull-Thru Launch at
Wolf Lake Memorial Park
Site Photographs – 2/11/2022

Park Improvements North of Launch Location, Looking North

Park Improvements North of Launch Location, Looking South

EZ Dock ADA Accessible Kayak/Canoe Pull-Thru Launch at
Wolf Lake Memorial Park
Site Photographs – 2/11/2022

Park Improvements Northeast of Launch Location (1)

Park Improvements Northeast of Launch Location (2)

EZ Dock ADA Accessible Kayak/Canoe Pull-Thru Launch at
Wolf Lake Memorial Park
Site Photographs – 2/11/2022

Parking Lot East of Launch Location, Looking Southeast

Parking Lot East of Launch Location, Looking Northeast

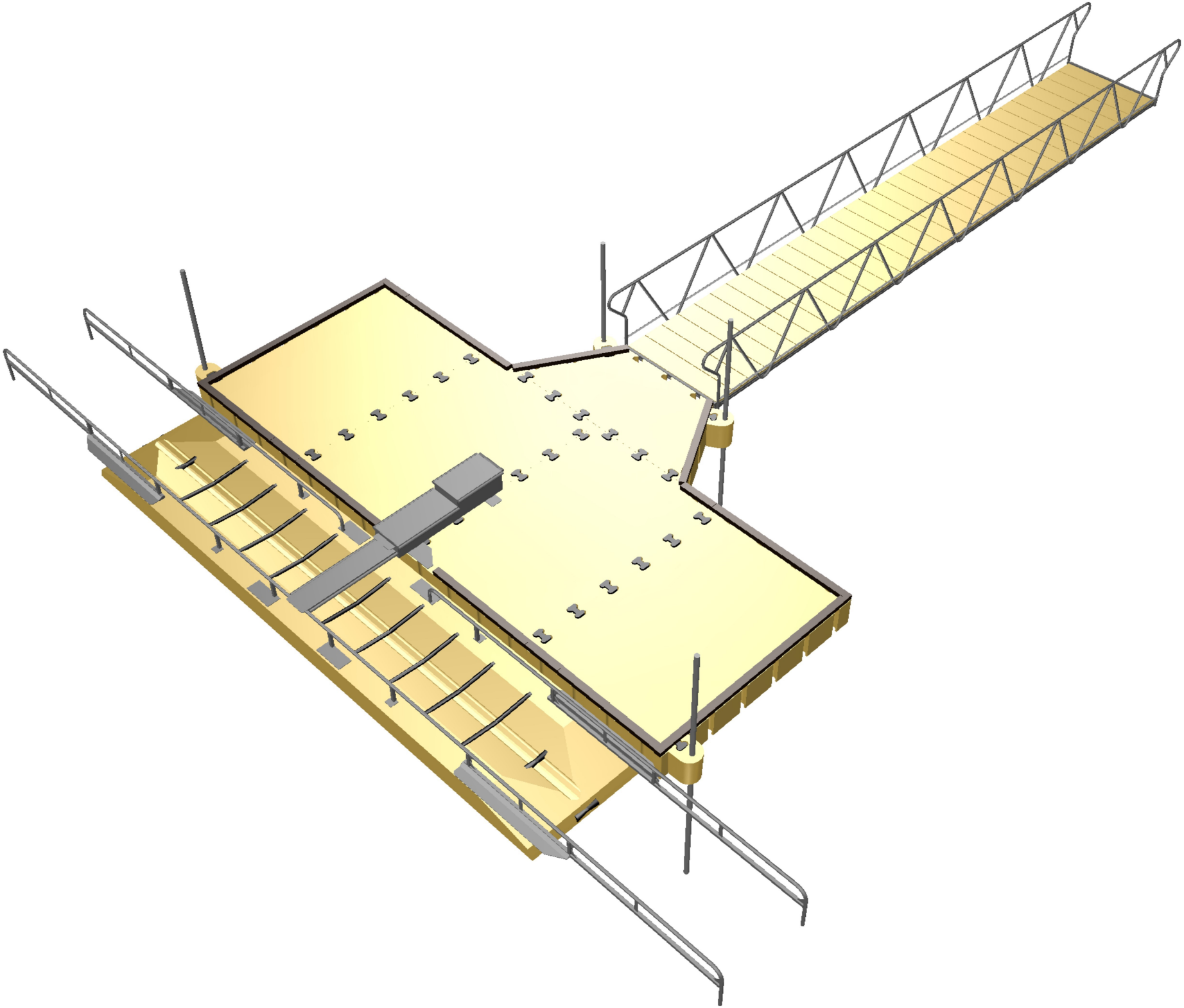

Dock Live Load of 62.5 lbs/sqft
Low Profile Dock Live Load 30 lbs/sqft

MADE IN USA

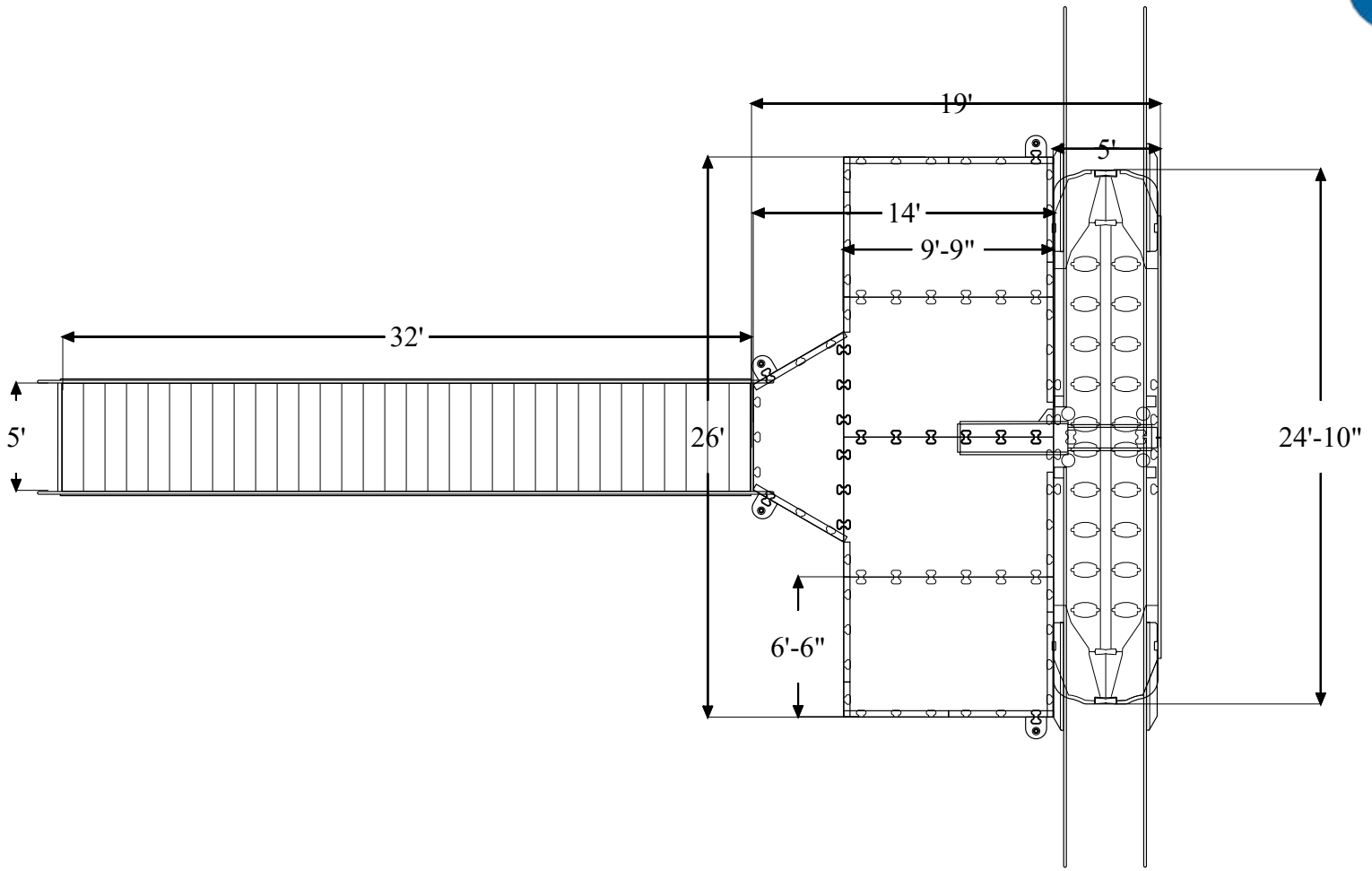


Project Name:

,

Distributor Name:
Ryan Uhrick
Deaton's Waterfront Services
(317) 747-4933

Drawn by: Blaine Deaton
Date: 9/28/2021
DWG Name: R0201_44467603118

EZ Dock, Inc
878 East Highway 60
Monett, Missouri 65708
Phone: 1 (800) 654-8168
Fax: (417) 235-2232

## General Notes:

1. This drawing does not reflect anchoring. Once sufficient information & completed Proposal Request Form concerning water and bottom conditions is received, anchoring may be detailed.

2. Note: It is the dock owner/operator's responsibility to ascertain and comply with all applicable Federal, State, and local laws, ordinances and regulations, as well as all inspection, permitting and licensing requirements pertaining to the installation, application and use of EZ Dock products on the owner/operator's premises. EZ Dock, Inc. assumes no duty or responsibility with respect to the legality or compliancy of the owner/operator's chosen installation, application or use of EZ Dock products.

3. Reference EZ Dock Owner Manual for additional details.

NOTICE! Read EZ Dock Limited Warranty carefully. Among other things, EZ Dock does not warrant damages, failures or defects caused by unauthorized modification of EZ Dock Product, and/or unauthorized attachment to/of EZ Dock Product.

**EZ-DOCK Mid-America**
**215 S. Madison**
**Fortville, IN 46040**
**317.747.4933**
sales@deatonsdocks.com

**Purchase Order No.**

| | Sold To | Ship To | | | |
|---|---|---|---|---|---|
| **Name** | Matthew Muta | **Name** | | **Date** | |
| **Address** | Wolf Lake | **Address** | Same As | **Customer #** | |
| **City** | Hammond | **City** | | **Sales Person** | Mike D. |
| **State** | IN | **State** | | **Ship Via** | SouthEast |
| **Zip** | | **Zip** | | | |
| **Phone** | 219.853.6413 | **Phone** | | | |
| **E-Mail** | Mmuta@HammondSD.com | | | | |

| Qty | Description | Unit Price | | Dealer | TOTAL |
|---|---|---|---|---|---|
| 4 | 80" x 10' Dock Sections #208010 | | | | |
| 1 | Half Hex Dock Section #260120 | | | | |
| 2 | EZ Port MAX Entry w/ No Rollers #206030PW | | | | |
| 28 | Coupler Set w/ Composite Rod #301100 | | | | |
| 8 | Dock Security Curbing #S35116 | | | | |
| 1 | EZ Launch Transfer Bench | | | | |
| 2 | Kayak Launch Roller Kit #S50911 | | | | |
| 2 | EZ Launch Rail Kit #500901 | | | | |
| 4 | 2.5" Galvanized Steel Pipe | | | | |
| 1 | 60" AL Gangway Hinge Kit #G200460 | | | | |
| 1 | 5' x 32' AL Gangway #G400532 | | | | |
| 4 | 3.5" SD Pipe Sleeve #135350 | | | | |
| 4 | 2.5" Pipe Augers #100255 | | | | |
| | | | | | |
| | | | | | |
| | | | | | |
| | | | | | |
| | | | | | |
| | | | | | |
| | | | | | |
| | | | | | |
| | | | | | |
| | | | **SubTotal** | | |
| | | | **Factory Freight** | | |
| | | | **Delivery** | | |
| | | | **GSA Discount** | | |
| | | | **Installation** | | |
| | | | **TOTAL** | | |

Shipping Instructions: