Final

TRAFFIC VOLUME FORECAST

State Road 25, Hoosier Heartland Highway (HHH)
Interstate 65 to Carroll County Line
Tippecanoe County
Des. No. 9802920

Indiana Department of Transportation

Indianapolis, Indiana

November 2006

EXECUTIVE SUMMARY

The following report provides average annual daily traffic (AADT), design hour volume (DHV), and the percentage of commercial vehicles along with the turning movement volumes for intersections along State Road 25, from Interstate 65 to the Carroll County line. These traffic forecasts are developed for new road construction that is part of the Hoosier Heartland Highway (HHH) project connecting Lafayette and Fort Wayne. The forecasted intersections are located between in northeastern Tippecanoe County. The adjacent land use is a mix of agricultural, residential and wooded uses.

The growth rate is based on the one is used in the Engineers Report dated December 2003. In addition to the growth rates, the report also generated traffic projected volumes for 2030 at various segments and at major intersections. The annual growth rate from the Engineers Report is 1.25 percent. Using this rate (0.0125) and 2006 as a base year, the growth factors for the horizon years 2010, 2015, 2020, and 2030 are 1.050, 1.113, 1.175, and 1.300.

The forecasted traffic volumes west of the western connection with old State Road 25 were increased appropriately to reflect the traffic volumes on old State Road 25. The affected intersections are the Interstate 65 northbound and southbound ramps.

Turning movement counts were provided in both the Engineers Report and by INDOT. Turning movement volumes for AADT, AM-DHV, and PM-DHV were calculated using turning movement propensity modeling software TMOVES. The commercial vehicle percentages for the AADT, AM design hour and PM design hour are inferred from the percentages calculated from the machine classification counts.

TRAFFIC VOLUME FORECAST FOR INTERSECTIONS

Date: Nov-06
Project: Des. No. 9802920
Route: SR 25 (HHH) at I-65 SB Ramps
County: Tippecanoe County
Other Info: AM-DHV

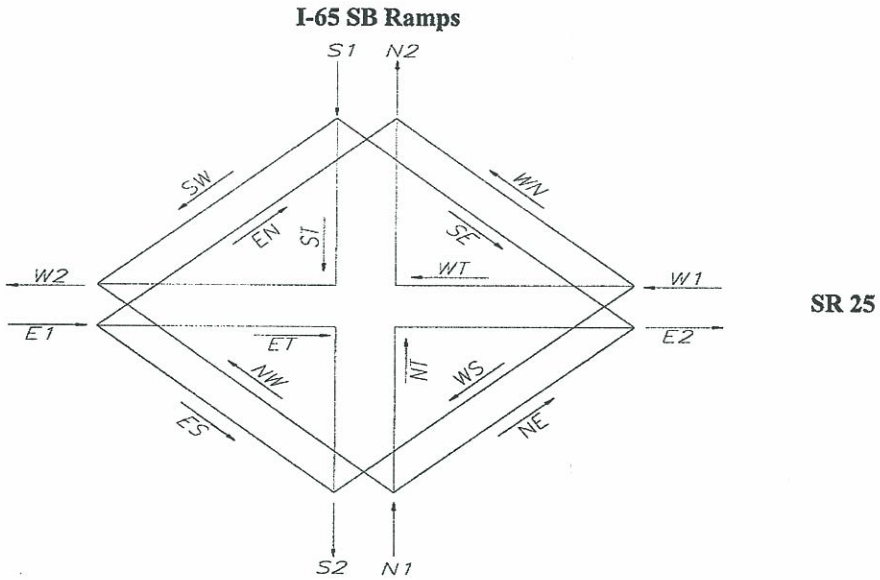

Turning Movements	AADT 2006	2010	2015	2020	2030	DHV %	COMMERCIAL VEHICLES % AADT	% DHV
NE								
NW								
NT								
SE	550	580	610	650	720	15	16	20
SW	1190	1250	1320	1400	1550	9	8	11
ST	10	10	10	10	10	10	10	11
ES	3470	3640	3860	4080	4510	9	5	9
EN								
ET	8760	9200	9750	10290	11390	8	19	18
WN								
WS	3030	3180	3370	3560	3940	11	9	8
WT	11040	11590	12280	12970	14350	12	14	15
N1								
S2	6510	6830	7240	7650	8460	10	7	9
S1	1750	1840	1940	2060	2280	11	10	14
N2								
E1	12230	12840	13610	14370	15900	8	15	15
W2	12230	12840	13600	14370	15900	12	13	15
W1	14070	14770	15650	16530	18290	12	13	13
E2	9310	9780	10360	10940	12110	9	19	18

TRAFFIC VOLUME FORECAST FOR INTERSECTIONS

Date: Nov-06
Project: Des. No. 9802920
Route: SR 25 (HHH) at I-65 SB Ramps
County: Tippecanoe County
Other Info: PM-DHV

I-65 SB Ramps

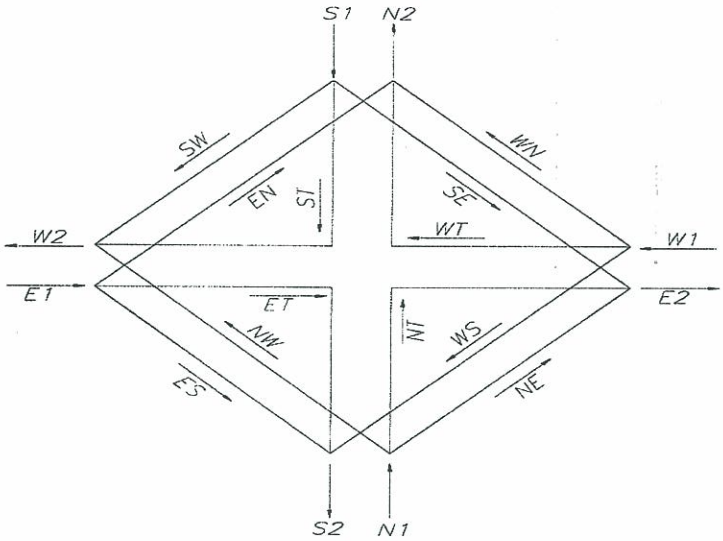

SR 25

Turning Movements	AADT 2006	AADT 2010	AADT 2015	AADT 2020	AADT 2030	DHV %	COMMERCIAL VEHICLES % AADT	COMMERCIAL VEHICLES % DHV
NE								
NW								
NT								
SE	550	580	610	650	720	5	16	14
SW	1190	1250	1320	1400	1550	11	8	4
ST	10	10	10	10	10	10	10	10
ES	3470	3640	3860	4080	4510	11	5	5
EN								
ET	8760	9200	9750	10290	11390	12	19	15
WN								
WS	3030	3180	3370	3560	3940	10	9	11
WT	11040	11590	12280	12970	14350	8	14	12
N1								
S2	6510	6830	7240	7650	8460	10	7	8
S1	1750	1840	1940	2060	2280	9	10	7
N2								
E1	12230	12840	13610	14370	15900	12	15	12
W2	12230	12840	13600	14370	15900	8	13	11
W1	14070	14770	15650	16530	18290	8	13	12
E2	9310	9780	10360	10940	12110	12	19	15

TRAFFIC VOLUME FORECAST FOR INTERSECTIONS

Date: Nov-06
Project: Des. No. 9802920
Route: SR 25 (HHH) at I-65 NB Ramps
County: Tippecanoe County
Other Info: AM-DHV

I-65 NB Ramps

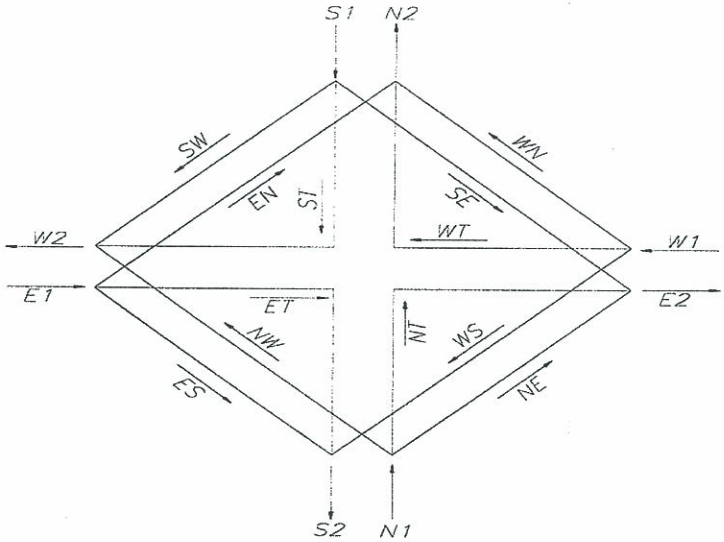

SR 25

Turning Movements	AADT 2006	2010	2015	2020	2030	DHV %	COMMERCIAL VEHICLES % AADT	% DHV
NE	3030	3180	3370	3560	3940	8	13	22
NW	3470	3640	3860	4080	4510	11	7	8
NT	10	10	10	10	10	10	10	11
SE								
SW								
ST								
ES								
EN	1190	1250	1320	1400	1550	11	9	15
ET	8120	8530	9030	9540	10560	8	18	19
WN	550	580	610	650	720	5	9	8
WS								
WT	10600	11130	11790	12460	13780	12	14	15
N1	6510	6830	7240	7650	8460	9	10	15
S2								
S1								
N2	1750	1840	1940	2060	2280	9	9	13
E1	9310	9780	10350	10940	12110	9	17	18
W2	14070	14770	15650	16540	18290	12	12	13
W1	11150	11710	12400	13110	14500	12	14	15
E2	11150	11710	12400	13100	14500	8	17	20

TRAFFIC VOLUME FORECAST FOR INTERSECTIONS

Date: Nov-06
Project: Des. No. 9802920
Route: SR 25 (HHH) at I-65 NB Ramps
County: Tippecanoe County
Other Info: PM-DHV

I-65 NB Ramps

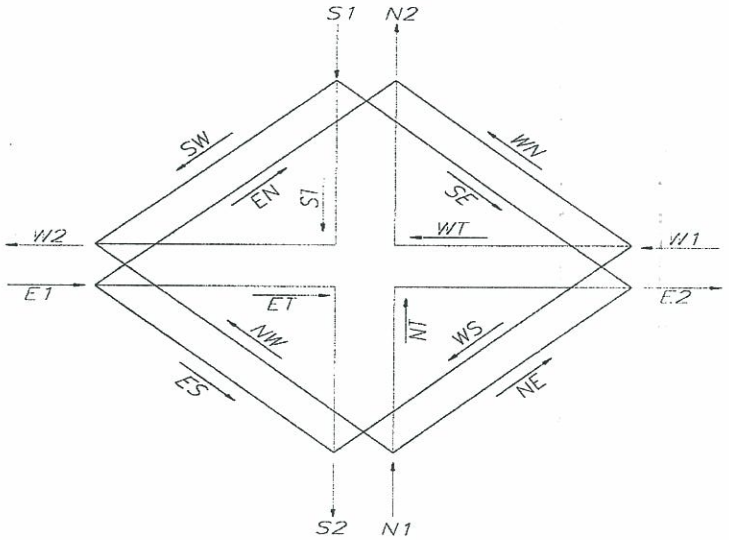

SR 25

Turning Movements	AADT 2006	2010	2015	2020	2030	DHV %	COMMERCIAL VEHICLES % AADT	% DHV
NE	3030	3180	3370	3560	3940	12	13	9
NW	3470	3640	3860	4080	4510	9	7	7
NT	10	10	10	10	10	10	10	10
SE								
SW								
ST								
ES								
EN	1190	1250	1320	1400	1550	9	9	6
ET	8120	8530	9030	9540	10560	12	18	15
WN	550	580	610	650	720	15	9	9
WS								
WT	10600	11130	11790	12460	13780	8	14	12
N1	6510	6830	7240	7650	8460	11	10	8
S2								
S1								
N2	1750	1840	1940	2060	2280	11	9	7
E1	9310	9780	10350	10940	12110	12	17	14
W2	14070	14770	15650	16540	18290	8	12	11
W1	11150	11710	12400	13110	14500	8	14	12
E2	11150	11710	12400	13100	14500	12	17	13

TRAFFIC VOLUME FORECAST FOR INTERSECTIONS

Date: Nov-06
Project: Des. No. 9802920
Route: HHH at SR 25 Connector (West)
County: Tippecanoe County
Other Info: AM-DHV

SR 25 Connector

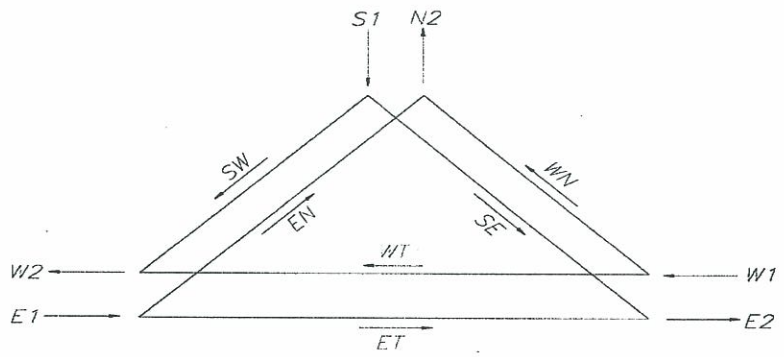

HHH

Turning Movements	AADT 2006	2010	2015	2020	2030	DHV %	COMMERCIAL VEHICLES % AADT	% DHV
NE								
NW								
NT								
SE	580	610	650	680	750	9	7	8
SW	3080	3230	3430	3620	4000	12	6	7
ST								
ES								
EN	3080	3230	3430	3620	4000	8	6	7
ET	8080	8480	8990	9490	10500	8	18	15
WN	580	610	650	680	750	10	7	8
WS								
WT	8080	8480	8990	9490	10500	12	15	12
N1								
S2								
S1	3660	3840	4080	4300	4750	11	6	7
N2	3660	3840	4080	4300	4750	8	6	7
E1	11160	11710	12420	13110	14500	8	15	13
W2	11160	11710	12420	13110	14500	12	13	11
W1	8660	9090	9640	10170	11250	12	14	12
E2	8660	9090	9640	10170	11250	8	17	15

TRAFFIC VOLUME FORECAST FOR INTERSECTIONS

Date: Nov-06
Project: Des. No. 9802920
Route: HHH at SR 25 Connector (West)
County: Tippecanoe County
Other Info: PM-DHV

SR 25 Connector

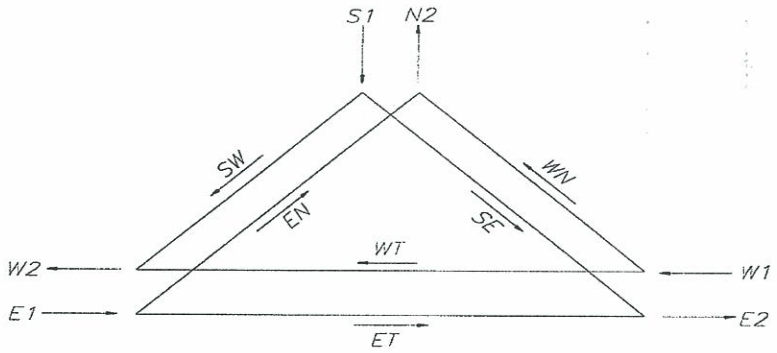

HHH

Turning Movements	AADT 2006	2010	2015	2020	2030	DHV %	COMMERCIAL VEHICLES % AADT	% DHV
NE								
NW								
NT								
SE	580	610	650	680	750	17	7	7
SW	3080	3230	3430	3620	4000	9	6	6
ST								
ES								
EN	3080	3230	3430	3620	4000	13	6	6
ET	8080	8480	8990	9490	10500	12	18	16
WN	580	610	650	680	750	16	7	7
WS								
WT	8080	8480	8990	9490	10500	7	15	16
N1								
S2								
S1	3660	3840	4080	4300	4750	11	6	6
N2	3660	3840	4080	4300	4750	13	6	6
E1	11160	11710	12420	13110	14500	12	15	13
W2	11160	11710	12420	13110	14500	8	13	13
W1	8660	9090	9640	10170	11250	8	14	15
E2	8660	9090	9640	10170	11250	12	17	15