CHAPTER 405

Reinforced-Concrete Structure

Design Memorandum	Revision Date	Sections Affected
13-01	Jan. 2013	Figures 405-3F, -3G

TABLE OF CONTENTS

LIST OF FIGURES 4

405-1.0 GENERAL DESIGN CONSIDERATIONS 6
405-1.01 Material Properties 6
405-1.02 Flexure 6
405-1.03 Limits for Reinforcing Steel 7
405-1.04 Shear and Torsion 7
405-1.05 Strut-and-Tie Model 9
405-1.06 Fatigue 11
405-1.07 Crack Control 11

405-2.0 REINFORCING STEEL 11
405-2.01 Grade 11
405-2.02 Sizes 11
405-2.03 Concrete Cover 12
405-2.04 Spacing of Reinforcement 12
405-2.05 Fabrication Lengths 12
405-2.06 Development of Reinforcement 12
405-2.06(01) Development Length in Tension 13
405-2.06(02) Development Length in Compression 13
405-2.06(03) Standard End Hook Development Length in Tension 13
405-2.07 Splices 14
405-2.07(01) General 14
405-2.07(02) Lap Splices in Tension 14
405-2.07(03) Lap Splices in Compression 15
405-2.07(04) Mechanical Splices 15
405-2.07(05) Welded Splices 15
405-2.08 Hooks and Bends 15
405-2.09 Epoxy-Coated Reinforcement 16
405-2.10 Reinforcement Detailing 16
405-2.10(01) Standard Practice 16
405-2.10(02) Bars in Section 17
405-2.11 Bending Diagrams 18
405-2.12 Cutting Diagrams 18
405-2.13 Bill of Materials 19

405-3.0 REINFORCED CAST-IN-PLACE CONCRETE SLAB SUPERSTRUCTURE 20
405-3.01 General 20
405-3.01(01) Materials 20
405-3.01(02) Cover 20

405-3.01(03) Haunches 20
405-3.01(04) Substructures 21
405-3.01(05) Minimum Reinforcement 21
405-3.02 Computation of Slab Dead-Load Deflections 22
405-3.03 Construction Joints 22
405-3.04 Longitudinal Edge-Beam Design 23
405-3.05 Shrinkage and Temperature Reinforcement 23
405-3.06 Reinforcing Steel and Constructibility 23
405-3.07 Drainage Outlets 24
405-3.08 Distribution of Concrete-Railing Dead Load 24
405-3.09 Shear Resistance 24
405-3.10 Minimum Thickness of Slab 25
405-3.11 Development of Flexural Reinforcement 25
405-3.12 Skewed Reinforced-Concrete Slab Bridge 25
405-3.13 Transverse Shrinkage and Temperature Reinforcement in the Top of the Slab at the Bent Caps 26
405-3.14 Fatigue-Limit State 26
FIGURES 27

LIST OF FIGURES

Figure	Title
405-1A	Material Properties of Concrete
405-1B	Strut-and-Tie Model for Hammerhead Pier
405-1C	Strut-and-Tie Model for Beam Ends
405-2A	Reinforcing Bar Sizes
405-2B	Reinforcing Bars, Areas (in2) Per One Foot Section
405-2C	Minimum Concrete Cover for Design and Detailing
405-2D	Minimum Center-to-Center Spacing of Bars
405-2E	Development Lengths for Uncoated Bars in Tension, f_c' = 3 ksi
405-2F	Development Lengths for Uncoated Bars in Tension, f_c' = 4 ksi
405-2G	Development Lengths for Epoxy Coated Bars in Tension, f_c' = 3 ksi
405-2H	Development Lengths for Epoxy Coated Bars in Tension, f_c' = 4 ksi
405-2 I	Hooked Uncoated Bar Development Lengths, Tension, f_c' = 3 ksi
405-2J	Hooked Uncoated Bar Development Lengths, Tension, f_c' = 4 ksi
405-2K	Hooked Epoxy Coated Bar Development Lengths, Tension, f_c' = 3 ksi
405-2L	Hooked Epoxy Coated Bar Development Lengths, Tension, f_c' = 4 ksi
405-2M	Class A Splice Lengths for Uncoated Bars in Tension, f_c' = 3 ksi
405-2N	Class A Splice Lengths for Uncoated Bars in Tension, f_c' = 4 ksi
405-2 O	Class A Splice Lengths for Epoxy Coated Bars in Tension, f_c' = 3 ksi
405-2P	Class A Splice Lengths for Epoxy Coated Bars in Tension, f_c' = 4 ksi
405-2Q	Class B Splice Lengths for Uncoated Bars in Tension, f_c' = 3 ksi
405-2R	Class B Splice Lengths for Uncoated Bars in Tension, f_c' = 4 ksi
405-2S	Class B Splice Lengths for Epoxy Coated Bars in Tension, f_c' = 3 ksi
405-2T	Class B Splice Lengths for Epoxy Coated Bars in Tension, f_c' = 4 ksi
405-2U	Class C Splice Lengths for Uncoated Bars in Tension, f_c' = 3 ksi
405-2V	Class C Splice Lengths for Uncoated Bars in Tension, f_c' = 4 ksi
405-2W	Class C Splice Lengths for Epoxy Coated Bars in Tension, f_c' = 3 ksi
405-2X	Class C Splice Lengths for Epoxy Coated Bars in Tension, f_c' = 4 ksi
405-2Y	Hooks and Bends
405-2Z	Bars in Section
405-2AA	Bending Diagram Examples
405-2BB	Cutting Diagram (Transverse Steel in Bridge Deck)
405-2CC	Cutting Diagram (Hammerhead Stem Pier)
405-2DD	Reinforced Concrete Bridge Approach Bill of Materials
405-3A	Haunch Configurations for Reinforced Concrete Slab Superstructures
405-3B	Typical Reinforced Concrete Slab Superstructure
405-3C	Shrinkage and Temperature Reinforcement for Slab Superstructure
405-3D	Integral Cap at Slab Superstructure (Typical Half-Section)

405-3E Integral Caps at Slab Superstructure (Half-Longitudinal Section)
405-3F Integral Cap at Slab Superstructure (Section Through End Bent)
405-3G Integral Cap at Slab Superstructure (Section Through Interior Bent)

CHAPTER 405

REINFORCED CONCRETE

The *LRFD Bridge Design Specifications* Section 5 specifies the design requirements for concrete in all structural elements. This Chapter provides supplementary information specifically regarding the general properties of concrete and reinforcing steel and the design of reinforced concrete.

References shown following section titles are to the AASHTO *LRFD Bridge Design Specifications.*

405-1.0 GENERAL DESIGN CONSIDERATIONS

405-1.01 Material Properties

The minimum yield strength for reinforcing steel shall be taken as 60 ksi.

Figure 405-1A provides criteria for concrete materials in structural elements.

405-1.02 Flexure

To facilitate design, *LRFD* 5.7.2.2 provides a simplified sectional stress distribution for the Strength Limit state, the application of which is limited to an under-reinforced rectangular section. Stresses in both top and bottom steel mats are taken at yield, while the concrete stress block is assumed to be rectangular with an intensity of $0.85f_c'$ and a height as described by the equation as follows:

$$a = \frac{A_s f_y - A_s' f_y'}{0.85 f_c' b}$$

Location of the neutral axis is calculated as follows:

$$c = \frac{a}{\beta_1}$$

The factor β_1 shall be taken as 0.85 for concrete strength not exceeding 4 ksi. For concrete strength exceeding 4 ksi, β_1 shall be reduced at a rate of 0.05 for each 1 ksi of strength in excess

of 4 ksi. However, β_1 shall not be taken to be less than 0.65, in accordance with *LRFD* 5.7.2.2, and the nominal flexural resistance as follows:

$$M_n = A_s f_y [d_s - 0.5a] - A'_s \; f'_y \; (d'_s - 0.5a)$$

405-1.03 Limits for Reinforcing Steel

The minimum reinforcement shall be checked in accordance with *LRFD* 5.7.3.3.2 at a section to be certain that the amount of prestressed and non-prestressed reinforcement is enough to develop a factored flexural resistance, M_r, at least equal to the lesser of at least 1.2 times the cracking moment, M_{cr}, or 1.33 times the factored moment required by the applicable strength load combinations. Most often, $1.2M_{cr}$ controls in the maximum positive-moment regions. In the region located approximately within the end one-third of the beam or span, 1.33 times the factored moment will control.

The cracking moment is computed by means of *LRFD* Equation 5.7.3.6.2-2 as follows:

$$M_{cr} = \frac{f_r I_g}{y_t}$$

Where

M_{cr} = cracking moment, kip-in.

f_r = modulus of rupture of concrete

y_t = distance from the neutral axis to the extreme tension fiber, in.

405-1.04 Shear and Torsion

LRFD 5.8 allows two methods of shear design for prestressed concrete, the strut-and-tie model and the sectional-design model. The sectional-design model is appropriate for the design of a typical bridge girder, slab, or other region of components where the assumptions of traditional beam theory are valid. This theory assumes that the response at a particular section depends only on the calculated values of the sectional force effects such as moment, shear, axial load, and torsion, but it does not consider the specific details of how the force effects were introduced into the member.

In a region near a discontinuity, such as an abrupt change in cross-section, opening, coped, or dapped, end, deep beam, or corbel, the strut-and-tie model shall be used. See *LRFD* 5.6.3 and 5.13.2.

LRFD 5.8.3 discusses the sectional-design model. Subsections 1 and 2 describe the applicable geometry required to use this technique to design web reinforcement.

The nominal resistance is taken as the lesser of the following:

$$V_n = V_c + V_s + V_p \qquad \textit{LRFD} \text{ Equation 5.8.3.3-1}$$

or

$$V_n = 0.25\, f'_c\, b_v d_v + V_p \qquad \textit{LRFD} \text{ Equation 5.8.3.3-2}$$

For a non-prestressed section, $V_p = 0$.

LRFD Equation 5.8.3.3-2 represents an upper limit of V_n to ensure that the concrete in the web will not crush prior to yield of the transverse reinforcement.

The nominal shear resistance provided by tension in the concrete is computed as follows:

$$V_c = 0.0316\beta\sqrt{f'_c}\, b_v d_v$$

The contribution of the web reinforcement is computed as follows:

$$V_s = \frac{A_v f_y d_v \left(\cot\theta + \cot\alpha\right)\sin\alpha}{s} \qquad \textit{LRFD} \text{ Equation 5.8.3.3-4}$$

Where angle θ represents the inclination of the diagonal compressive forces measured from the horizontal beam axis, and angle α represents the web reinforcement relative to the horizontal beam axis, respectively.

For where the web shear reinforcement is vertical, α = 90 deg, V_s simplifies to the following:

$$V_s = \frac{A_v f_y d_v \cot\theta}{s} \qquad \textit{LRFD} \text{ Equation 5.8.3.3-3}$$

Both θ and β are functions of the longitudinal steel strain, ε_x, which, in turn, is a function of θ. Therefore, the design process is an iterative one. A detailed methodology, along with the design

tables, is provided in *LRFD* 5.8.3.4.2. For a section including at least the minimum amount of transverse reinforcement specified in *LRFD* 5.8.2.5, the values of β and θ shall be taken from *LRFD* Table 5.8.3.4.2-1. For a section that does not include the minimum transverse reinforcement requirements, *LRFD* Table 5.8.3.4.2-2 shall be used to determine β and θ.

This process can be considered as an improvement in accounting for the interaction between shear and flexure and attempting to control cracking at the Strength Limit state.

For a non-prestressed concrete section not subjected to axial tension and including at least the minimum amount of transverse reinforcement specified in *LRFD* 5.8.2.5, or having an overall depth of less than 16 in., a value of 2 may be taken for β and a value of 45 deg may be taken for θ.

Transverse shear reinforcement shall be provided if the following applies.

$$V_u > 0.5\,\phi\left(V_c + V_p\right)$$ *LRFD* Equation 5.8.2.4-1

Where transverse reinforcement is required, the area of steel shall not be less than the following:

$$A_v = 0.0316\sqrt{f_c'}\,\frac{b_v s}{f_y}$$ *LRFD* Equation 5.8.2.5-1

If the reaction introduces compression into the end of the member, the critical section for shear is taken as the larger of $0.5d_v\cot\theta$ or d_v, measured from the face of the support (see *LRFD* 5.8.3.2).

Torsion is most often not a major consideration. Where torsion effects are present, the member shall be designed in accordance with *LRFD* 5.8.2 and 5.8.3.6. A situation that can require a torsion design includes the following:

1. cantilever brackets connected perpendicular to a concrete beam, especially if a diaphragm is not located opposite the bracket; or

2. concrete diaphragms used to make precast beams continuous for live load where the beams are spaced differently in adjacent spans.

405-1.05 Strut-and-Tie Model

Members, if loaded, indicate the presence of definite stress fields which can individually be represented by tensile or compressive resultant forces as their vectoral sums. The load paths taken by these resultants form a truss-like pattern which is optimum for the given loading and

that the resultants are in reasonable equilibrium, especially after cracking. The compressive concrete paths are the struts, and the reinforcing steel groups are the ties. The model is shearless.

The model has application for bridge components and parts such as pier caps, beam ends, post-tensioning anchorage zones, etc. A presentation of the model appears in the *PCI Precast Prestressed Concrete Bridge Design Manual*, Chapter 8, *Design of Highway Bridges based on AASHTO LRFD Design Specifications*, and in *Towards a Consistent Design of Structural Concrete*, PCI Journal, Vol. 32, No. 3, 1987. *LRFD* 5.6.3 provides adequately for design. If the model is not used for actual proportioning, it provides a fast check to ensure that all considerations are made in the design, especially for the appropriate anchorage of the steel.

Application of the model for a hammerhead pier is demonstrated in Figure 405-1B. There are five beams supported by the pier, of which two affect the design of a cantilever. The truss geometry selected here ensures that the struts, being parallel, are independent from each other. The scheme is indicative of the significance of a well-proportioned haunch. This design will yield approximately the same amount of steel in both ties. The steel in both ties is extended to the boundaries of their respective struts, then hooked down. The 90-deg hook of Tie No. 1 is further secured to the concrete by secondary steel, and the hook of Tie No. 2 is positioned in, and normal to, Strut No. 1.

This example was selected because of the potential excessive cracking of a pier head invariably designed as a beam. Normal beam design is not conservative for this application, due to the following:

1. early discontinuity of steel;

2. an erroneous estimate for the location of maximum moment, usually taken at the face of the pier-column; and

3. anchoring the steel in cracked zones.

Cracking is associated with at least partial debonding. Thus, the bonding capacity of cracked concrete cannot be considered completely reliable. Improperly-anchored steel is a design consideration in which mistakes are made, and the *LRFD Specifications* requires that steel shall not be anchored in cracked zones of concrete.

The model can also be used for the approximate analysis of the beam end. Figure 405-1C detail (a) shows a convenient method for checking the adequacy of reinforcement in the end zone and the magnitude of compressive stresses in the web. In lieu of refined calculations, the angle θ can be assumed as 30 deg.

Figure 405-1C detail (b) indicates an application of the model to estimate the transverse forces in the bearing area to be resisted by the cage.

405-1.06 Fatigue

The constant-amplitude fatigue threshold for straight reinforcement is taken as follows:

$$(\Delta F)_{TH} = 24 - 0.33\, f_{min} \qquad \textit{LRFD} \text{ Equation 5.4.3.2-1}$$

Assuming r/h = 0.3, *LRFD* Equation 5.5.3.2-1 can be rearranged for easier interpretations as follows:

$$f_f + 0.33\, f_{min} \leq 23.4\, ksi$$

LRFD 5.5.3 shows a change in computing f_f. It is the stress range due to 75% of a single truck per bridge, lane load excluded, with reduced impact of 15%, and with the major axles of the truck at a constant spacing of 30 ft, instead of all contributing lanes being loaded. Also, *LRFD* 5.5.3 specifies that, if the bridge is analyzed by means of the approximate distribution method, live-load distribution factors for one design lane loaded shall be used.

405-1.07 Crack Control

Crack-control design shall be as described in *LRFD* 5.7.3.4.

405-2.0 REINFORCING STEEL

405-2.01 Grade

The yield strength of reinforcing bars shall be taken as 60 ksi. The modulus of elasticity, E_s, shall be taken as 29,000 ksi.

405-2.02 Sizes

Reinforcing bars are referred to by number, and they vary in size from #3 to #18. Figures 405-2A and 405-2B show the sizes, bar spacings, and properties of the types of bars used.

To avoid damage due to handling, the minimum bar size shall be #4. Longitudinal ties in compression members may be #3. See Section 409-7.03(07).

405-2.03 Concrete Cover

See Figure 405-2C for criteria for minimum concrete cover for various applications. The values shown in Figure 405-2C are based on $0.40 \leq w/c \leq 0.50$. All clearances to reinforcing steel shall be shown on the plans.

405-2.04 Spacing of Reinforcement

For minimum spacing of bars, see *LRFD* 5.10.3 and Figure 405-2D.

Fit and clearance of reinforcement shall be checked by means of calculations and large-scale drawings. Skews will tend to aggravate problems of reinforcing fit. Tolerances normally allowed for cutting, bending, and locating reinforcement shall be considered.

The distance from the face of concrete to the center of the first bar shall be shown. Where the distance between the first and last bars is such that the number of bars required results in spacings that are not to the nearer of ¼ in., the bars shall be shown to be equally spaced. Alternatively, one odd spacing may be used with spacings that are to the nearer of ¼ in.

405-2.05 Fabrication Lengths

See Figure 405-2A for maximum and normal bar lengths for fabrication. For ease of hauling and handling, the maximum length shall be reduced where the location of the splice is arbitrary. The maximum length of bars extending above a horizontal joint, e.g., from a footing into a wall, shall be 10 ft.

405-2.06 Development of Reinforcement

Development of reinforcement shall be as described in *LRFD* 5.11.2.

405-2.06(01) Development Length in Tension

Development length, l_d, or anchorage of reinforcement, is required on both sides of a point of maximum stress at each section of a member.

Development of bars in tension involves calculating the basic development length, l_{db}, which is modified by factors to reflect bar spacing, cover, enclosing transverse reinforcement, top-bar effect, type of aggregate, epoxy coating, and the ratio of required area to provide the area of reinforcement to be developed.

The development length, l_d, including all applicable modification factors, must not be less than 1'-0".

Figures 405-2E through 405-2H show the tension development length for both uncoated and epoxy coated bars for normal weight concrete with specified 28-day strength of 3 ksi or 4 ksi. For class A concrete with f'_c = 3.5 ksi, use the development lengths shown for f'_c = 3 ksi unless calculated independently.

Development lengths shown in the figures for both uncoated and epoxy-coated bars must be multiplied by a factor of 2 for bars with a cover equal to the bar diameter, d_b, or less, or with a clear spacing between bars of $2d_b$ or less. Development lengths shown for epoxy-coated bars may be multiplied by a factor of 0.8, if the cover is $3d_b$ or more and the clear spacing between bars is $6d_b$ or more.

405-2.06(02) Development Length in Compression

The standard procedure is to use tension development lengths for bars in either tension or in compression. This ensures that an adequate development length will be provided in a compression member that will be primarily controlled by bending.

405-2.06(03) Standard End Hook Development Length in Tension

A standard end hook, utilizing a 90-deg or 180-deg bend, is used to develop a bar in tension where space limitations restrict the use of a straight bar. End hooks on compression bars are not effective for development-length purposes. The values shown in Figures 405-2 I and 405-2L. and *LRFD* Figure C5.11.2.4.1 show the tension development lengths for both uncoated and epoxy-coated hooked bars for normal weight concrete with specified strength of 3 ksi or 4 ksi.

For class A concrete with f'_c = 3.5 ksi, use development lengths shown for f'_c = 3 ksi unless calculated independently.

405-2.07 Splices

Splice-length determination shall be as described in *LRFD* 5.11.5.

405-2.07(01) General

Lap splices or mechanical splices can be used to splice reinforcing bars: Lap splicing is the most common method. The plans shall show the locations and lengths of all lap splices. Due to splice lengths required, lap splices are not permitted for #11 bars or larger. However, if #11 bars or larger are necessary, mechanical bar splices shall be used. Mechanical splices shall also be considered in lieu of lap splices in a highly-congested area. Mechanical splices are required for tension tie members.

Lap splices, for either tension or compression bars, shall not be less than 12 in. See the INDOT *Standard Specifications* for additional splice requirements.

If transverse reinforcing steel in a bridge deck is to be lapped near a longitudinal construction joint, show the entire lap splice on the side of the construction joint that will be poured last.

405-2.07(02) Lap Splices in Tension

Many of the same factors which affect development length affect splices. Consequently, tension lap splices are a function of the bar development length, l_d. Tension lap splices are classified as A, B, or C. Bars shall be spliced at points of minimum stress.

For a tension splice, the length of a lap splice between bars of different sizes shall be governed by the smaller bar.

Figures 405-2M through 405-2X show tension lap splices for both uncoated and epoxy-coated bars for normal weight concrete with specified strength of 3 ksi or 4 ksi. For class A concrete with f'_c = 3.5 ksi, use splice lengths shown for f'_c = 3 ksi unless calculated independently.

Splice lengths for spacing ≥ 6 in., shown in the Figures for both uncoated and epoxy-coated bars, must be multiplied by a factor of 2 for bars with a cover of equal to bar diameter, d_b, or less, or

with a clear spacing between bars of $2d_b$ or less. Splice lengths shown for epoxy-coated bars can also be multiplied by a factor of 0.8 if cover is $3d_b$ or more and clear spacing between bars is $6d_b$ or more.

405-2.07(03) Lap Splices in Compression

Lap splices in a compression member are sized for tension lap splices. The design of a compression member, such as a column, pier wall, or abutment wall, involves the combination of vertical and lateral loads. Therefore, the policy of requiring a tension lap splice accounts for the possibility that the member design is primarily controlled by bending. Also, the increase in cost of additional splice-reinforcement material is small.

405-2.07(04) Mechanical Splices

A mechanical splice is a proprietary splicing mechanism. The requirements for mechanical splices are described in *LRFD* 5.11.5.2.2, 5.11.5.3.2, and 5.11.5.5.2. All mechanical connectors shall develop not less than 125% of the specified yield strength of the bar regardless of the stress level in the bar.

405-2.07(05) Welded Splices

Splicing of reinforcing bars by means of welding is not permitted.

405-2.08 Hooks and Bends

See *LRFD* 5.11.2.4 and Figure 405-2Y for standard hook or bend diameters. The value of *A* shall be used for a standard 90-deg hook for longitudinal reinforcement with an end hook, and transverse reinforcement with a stirrup or tie hook. For transverse reinforcement where the bar size is #3 or #4 and shorter tail lengths are required for constructability, a non-standard hook may be used. Dimensions and bend diameters of non-standard hooks shall be shown on the plans and shall be in accordance with the CRSI *Manual of Standard Practice*. The total length of each bent bar shall be rounded up to the next 1 in. The legs of the bar shall add up to this total. The difference must be added to a leg of the bar.

405-2.09 Epoxy-Coated Reinforcement

Epoxy-coated reinforcement shall be used in accordance with *LRFD* 2.5.2.1.1 and 5.12.4, at the locations as follows:

1. the bridge deck;
2. the top 12 in. of a reinforced-concrete slab bridge;
3. the end bents and wingwalls of an integral end bent beam and deck-type structure;
4. the end bents and wingwalls of a beam and deck-type structure where deck expansion joints are located at the ends of the structure;
5. above the footing of each interior substructure unit that is located below a deck expansion joint. For a tall pier or bent, engineering judgment shall be used;
6. concrete bridge railing;
7. bars extending into the deck from the beams or substructure; or
8. reinforced-concrete bridge approaches.

For all other locations, use uncoated bars. These include the following:

1. piers, bents, or abutments that are located adjacent to a pavement surface; or
2. a reinforced-concrete retaining wall.

405-2.10 Reinforcement Detailing

405-2.10(01) Standard Practice

The following provides the standard practice for detailing reinforcing bars.

1. Reinforcing bars shall be called out in the plan, elevation, and sections to indicate the size, location, and spacing of the individual bars. The number of reinforcing bars shall be called out in only one view, usually the plan or elevation view. In other views, only the bar size and length, or bar mark, shall be called out.

2. In a plan or elevation view, only the first bar and the last bar of a series of bars shall be drawn, and the number of bars indicated between. In a section view, all bars shall be shown.

3. All dimensions on details are measured on centerlines of bars, except where cover, e.g., 2 in. cl., is indicated.

4. Straight bars will be designated by size and length, e.g., #4 x 15’-0”.

5. Straight-bar lengths shall be in 3-in. multiples, except for short vertical bars in a railing or a parallel wing, which shall be in 1-in. multiples.

6. Bent bars are assigned a bar mark of which the first one or two numbers indicate the size of the bar, and the last two numbers, 01 to 99, indicate the mark. Each bar mark may be assigned a lower-case-letter suffix to indicate the location of the bar in the proper element of the structure (e.g., 801a, 802a). The following letters may be used as suffixes:

   a, b, c, d, f, h, k, m, n, p, r, s, t, u, v, w, x, y, and z.

7. Assign letters in sequence with superstructure first and substructure last. For the substructure, assign letters in sequence for each abutment or bent except where these are detailed in pairs. The one letter is to apply to both.

8. Epoxy-coated bars will be suffixed by the letter E (e.g., #6E x 15’-0”, 801aE). If all bars are epoxy-coated, a note will suffice.

The following shall be considered when selecting and detailing reinforcing steel.

1. Where possible, make similar bars alike to result in as few different bars in a structural element as practical.

2. If rounding off lengths of bars, one length shall not encroach upon the minimum clearances.

3. Consideration shall be given to ease of placement of bars. A bar shall not have to be threaded through a maze of other bars. The bars shall be located so that they can be easily supported or tied to other reinforcement.

4. It may be more practical to lap two bent bars than to have a bar with five or six bends.

405-2.10(02) Bars in Section

Figure 405-2Z provides a section through a hypothetical member showing some of the accepted methods for detailing reinforcing steel. The following list describes some of the concerns and observations that shall be considered in detailing reinforcing steel.

A section view shall be drawn to a large-enough scale to show reinforcing details.

1. Stirrups or other bars not shown end-on shall be drawn as single broken or unbroken lines for a scale smaller than 1:10, or as double unbroken lines for a scale of 1:10 or larger.

2. Bends of standard hooks and stirrups need not be dimensioned. However, all bends shall be drawn to scale.

3. Bars shown end-on shall be shown as small circles. The circles may be left open or may be shown as a dot. However, the symbol used shall be consistently applied on the drawing. If bars and holes will be shown, the bars shall be shown as solid.

4. An arrowhead pointing to the bar or a circle drawn around the bar are the acceptable methods of detailing for a bar shown end-on. An arrowhead shall point directly to the bar.

5. Sections cut at specific locations along a member are preferred to a typical section for a complex reinforcing pattern.

6. Corner bars enclosed by stirrups or ties shall be shown at the corner of the bend (see Figure 405-2Z).

405-2.11 Bending Diagrams

The following is the standard practice for detailing bending diagrams.

1. All dimensions are measured out-to-out of bars.
2. All bent-bar partial dimensions shall be shown to the nearer ¼ in.
3. The overall length of a bent bar shall be rounded up to the next 1 in.

See Figure 405-2AA for information on bending diagrams.

405-2.12 Cutting Diagrams

Two methods of showing cutting diagrams are provided. Other methods may be used at the discretion of the designer. The first is used where two sets of the same size bars are required and the second is used where only one bar of each size is required. Cutting diagrams are given a bar mark like bent bars. The first method is shown in an example of a skewed deck with the same

bars in the top and bottom mats. Figure 405-2BB applies to the transverse steel in a bridge deck. The pertinent information shall be determined as follows:

1. Determine the longest, *B*, and shortest, *A*, bars required to the nearer 1 in.
2. Determine the number of bars required.
3. Divide the number of spaces, the number of bars minus 1, by the difference in length between the longest and shortest bars to obtain the increment. Round the increment to the nearer inch.
4. The length *L* is the sum of *A* + *B*.

The second method shall be used such as in an asymmetric widening of a hammerhead pier. An even number of bars will be provided by this cutting group. Figure 405-2CC shows the cantilevered portion of a hammerhead pier.

1. Determine the longest ,*B*, and shortest, *A*, bars required to the nearer 1 in.
2. Determine the number of bars required.
3. Divide the number of spaces, the number of bars minus 1, by the difference in length between the longest and shortest bars to obtain the increment *N*. Round the increment to the nearer inch.
4. Determine dimensions *B* and *C* as follows:

$$B \text{ or } C = \frac{A + D}{2 \pm 0.5N}$$

5. The length *L* = *A* + *D* = *B* + *C*. Adjust dimensions as necessary to make them fit this equation.

405-2.13 Bill of Materials

The following applies to the Bill of Materials.

1. The bars shall be listed in descending order of size.
2. For each bar size, bent bars shall be listed sequentially by number first followed by straight bars.
3. Straight bars shall be listed in descending order of length.
4. Subtotals of the weight shall be provided for each bar size.
5. Plain and epoxy-coated bars shall be billed separately with totals for each.
6. There shall be a separate Bill of Materials shown on the appropriate plan sheet for each structural element.

7. If two structural elements are very similar in dimension and reinforcement, it is permissible to combine the quantities into one Bill of Materials.

Figure 405-2DD illustrates a typical Bill of Materials for a reinforced-concrete bridge approach.

405-3.0 REINFORCED CAST-IN-PLACE CONCRETE SLAB SUPERSTRUCTURE

405-3.01 General

The reinforced cast-in-place concrete slab superstructure is frequently used due to its suitability for short spans and its ease of construction. It is the simplest among all superstructure systems.

This Section provides information for the design of a reinforced cast-in-place concrete slab superstructure that amplifies or clarifies the requirements of the *LRFD Bridge Design Specifications*.

405-3.01(01) Materials

Class C concrete shall be used. See *LRFD* 5.4 and Figure 405-1A for concrete properties.

405-3.01(02) Cover

LRFD 5.12.3 and Figure 405-2C provides criteria for minimum concrete cover for all structure elements. All clearances to reinforcing steel shall be shown on the plans.

405-3.01(03) Haunches

Straight haunches are preferred to parabolic haunches because straight haunches are relatively easy to form yet result in relatively proper stress flow.

Haunching is used to decrease maximum positive moments in a continuous structure by attracting more-negative moments to the haunches and to provide adequate resistance at the haunches for the increased negative moments. It is a simple, effective, and economical way to enhance the resistance of a thin concrete slab. As illustrated in Figure 405-3A, there are three ways of forming the haunch. The parabolic shape shown in detail (a) is the most natural in terms of stress flow, and certainly the most aesthetic. It is preferred for where the elevation is

frequently in view. The parabolic haunch, however, is not the easiest to form and, as alternatives, the straight haunch shown in detail (b), and the drop panel shown in detail (c), shall be considered where appropriate.

Figure 405-3B depicts the elevation and plan of a three-span, continuous haunched slab bridge with an extensive skew. The preferable ratio between interior and end span is approximately 1.25 to 1.33 for economy, but the system permits considerable freedom in selecting span ratio. The ratio between the depths at the centerlines of the interior piers and at the point of maximum positive moment shall be between 2.0 and 2.5. Except for aesthetics, the length of the haunch need not exceed the *kL* value indicated in Figure 405-3A, where *L* is the end span length. Longer haunches may be unnecessarily expensive or structurally counterproductive.

405-3.01(04) Substructures

The following describes the practice for types of substructures used.

1. End Supports. Where possible, use integral end bents. Their use is not restricted by highway alignment or skew. The maximum bridge length is 200 ft for the use of integral end bents without a special analysis.

2. Interior Supports. See Section 402-6.03 for practices regarding the selection of the type of interior support (e.g., piers, frame bents).

405-3.01(05) Minimum Reinforcement

In both the longitudinal and transverse directions, at both the top and bottom of the slab, the minimum reinforcement shall be determined in accordance with *LRFD* 5.7.3.3.2 and 5.10.8. The first is based on the cracking flexural strength of a component, and the second reflects requirements for shrinkage and temperature. In a slab superstructure, the two articles provide for nearly identical amounts of minimum reinforcement.

According to *LRFD* 5.14.4.1, bottom transverse reinforcement, with the minimum requirements described above as notwithstanding, may be determined either by means of a two-dimensional analysis or as a percentage of the maximum longitudinal positive moment steel in accordance with the following:

$$\frac{100}{L} \leq 50\%$$

The span length, *L*, in the equation shall be taken as that measured from the centerline to centerline of the supports. For a heavily skewed or curved bridge, the analytical approach is recommended.

Section 405-3.05 provides a simplified approach for shrinkage and temperature steel requirements.

405-3.02 Computation of Slab Dead-Load Deflections

For a concrete-deck-on-girder-type superstructure, the screed elevations shall be provided in accordance with *LRFD* 5.7.3.6.2 and Section 404-2.02(01). For a simple span or a continuous-spans reinforced-concrete slab superstructure, a dead-load deflection diagram showing the quarter-point deflections shall be shown on the plans. The contractor uses this information to develop screed elevations that will enable it to place the concrete slab at the proper final elevations. If a concrete-slab superstructure is located within a superelevation transition, or if other geometric complications are present, screed elevations are to be provided at 5-ft intervals.

The following criteria shall be used in developing a dead-load deflection diagram.

1. Compute dead-load deflections due to the weight of the concrete slab at the span quarter points or at a closer spacing if more accuracy is desired.
2. Compute instantaneous deflections by the usual methods using formulas for elastic deflections.
3. For determining deflections, use the gross moment of inertia and modulus of elasticity shown in Figure 405-1A.
4. Round off deflections values to the nearer 0.1 in.
5. The deflection of the concrete slab caused by the weight of a concrete railing is insignificant and may be ignored in developing the slab dead-load deflection diagram.
6. Do not include the effects of form settlement or crushing. This is the contractor's responsibility.

405-3.03 Construction Joints

Transverse construction joints are not permitted. The INDOT *Standard Specifications* provide construction requirements where transverse construction joints are unavoidable if concrete placement is interrupted due to rain or other unavoidable event.

Longitudinal construction joints are also undesirable. However, the method of placing concrete, rate of delivery of concrete, and the type of finishing machine used by the contractor dictate whether or not a slab must be placed in one or more placements. An optional longitudinal keyway construction joint shall be shown on the plans at the centerline of roadway. The contractor may request permission to eliminate the construction joint by providing information specific to the proposed method of placing concrete and equipment to be used.

Where phased construction is not anticipated, transverse reinforcing steel may be lapped at the optional longitudinal construction joint. If the structure will be built in phases, show the entire lap splices for all transverse reinforcing steel on the side of the construction joint that will be placed last.

405-3.04 Longitudinal Edge-Beam Design

An edge beam must be provided along each slab edge. Structurally-continuous barriers are considered effective only for the Service Limit state, and not the Strength or Extreme-Event Limit state. An edge beam can be a thickened section or a more heavily-reinforced section composite with the slab. The width of the edge beam may be taken to be the width of the equivalent strip as specified in *LRFD* 4.6.2.1.4b.

405-3.05 Shrinkage and Temperature Reinforcement

Evaluating the redistribution of force effects as a result of shrinkage, temperature change, creep, and movements of supports is not necessary.

The required shrinkage and temperature reinforcement, as a function of slab thickness, is provided in Figure 405-3C.

405-3.06 Reinforcing Steel and Constructibility

The following practices for reinforcing-steel placement shall be considered to improve the constructability.

1. The maximum reinforcing-bar size shall be #11.
2. The minimum spacing of reinforcing bars shall preferably be 6 in.

3. Longitudinal steel shall be detailed in a 2-bar alternating pattern, with one of the bars continuous through the slab. The maximum size difference shall be two standard bar sizes.

Vertical steel, other than that required to keep the longitudinal negative-moment reinforcement floating, may not be required. *LRFD* 5.11.1.2 provides requirements for the portion of the longitudinal positive-moment reinforcement that must be extended to the next support point in excess of that required by the factored maximum moment diagram. Similarly, there is a more-stringent requirement addressing the location of the anchorage for the longitudinal negative-moment reinforcement.

405-3.07 Drainage Outlets

LRFD 2.6.6, Chapter 202, and Section 203-4.03(07) discuss the hydrological and hydraulic analyses for a bridge deck. The following specifically applies to inlet selection.

The deck drains shown on the INDOT *Standard Drawings* shall be specified. The deck drains are designed for a reinforced-concrete slab bridge only. The drain is a PVC pipe, 6 in. dia., set into the deck. The small deck drains have limited hydraulic capacity. Therefore, the standard spacing is approximately 6 ft. A 1/2-in. depression, which extends 12 in. transversely from the face of the curb, slightly increases the capacity. The PVC pipe must clear the bent-cap face by 2 ft.

405-3.08 Distribution of Concrete-Railing Dead Load

Dead load due to barrier railings placed after the deck has set, shall be distributed with 60% of the load applied to the exterior beam and 40% of the load applied to the first adjacent interior beam. The beams shall also be checked with the loads distributed equally to all beams.

405-3.09 Shear Resistance

The moment design in accordance with *LRFD Specifications* Article 4.6.2.3 may be considered satisfactory for shear.

405-3.10 Minimum Thickness of Slab

The minimum slab thickness shall be in accordance with *LRFD* Table 2.5.2.6.3-1. In using the equations in the *LRFD* Table, the assumptions are as follows.

1. *S* is the length of the longest span.
2. The calculated thickness includes the 1/2-in. sacrificial wearing surface.
3. The thickness used may be greater than the value obtained from the Table.
4. The thickness used may be less than the value obtained from the Table as long as the live-load deflection does not exceed the criteria shown in *LRFD* 2.5.2.6.2.

405-3.11 Development of Flexural Reinforcement

LRFD 5.11.1.2 provides requirements for the portion of the longitudinal positive-moment reinforcement that must be extended beyond the centerline of support. Similarly, *LRFD* 5.11.1.2.3 addresses the location of the anchorage, or embedment length, for the longitudinal negative-moment reinforcement.

405-3.12 Skewed Reinforced-Concrete Slab Bridge

For a skew angle of less than 45 deg, the transverse reinforcement is permitted to be parallel to the skew, providing for equal bar lengths. For a skew angle of 45 deg or greater, the transverse reinforcement shall be placed perpendicular to the longitudinal reinforcement. This requirement concerns the direction of principal tensile stresses as they develop in a greatly-skewed structure and is intended to prevent excessive cracking.

Special slab-superstructure design or modifications to the integral end supports are not required for a greatly-skewed or -curved structure. The requirements are based upon performance of relatively small span structures constructed to date. Such slab superstructures have included skews in excess of 50 deg and moderate curvatures. A significant deviation from successful past practice shall be reviewed. See *LRFD* Table 2.6.2.6.3-1 and Figure 405-3B.

405-3.13 Transverse Shrinkage and Temperature Reinforcement in the Top of the Slab at the Bent Caps

Top longitudinal cap flexural reinforcement cannot be considered effective reinforcement for transverse shrinkage and temperature stresses described in *LRFD* 5.10.8 if this steel is located significantly below the surface of the concrete slab.

405-3.14 Fatigue-Limit State

The design shall be as described in *LRFD* 5.5.3.

Concrete	Yield Strength, f_c' (psi)	Modulus of Elasticity, E_c (ksi)	Modulus of Rupture, f_r (psi)
Class C	4000	3645	480
Class A	3500	3410	450
Class B	3000	3155	415

Notes:

1. *Thermal coefficient of expansion = 6.0 x 10^{-6}/°F*
2. *Shrinkage coefficient = 0.0002 after 28 days*
   = 0.0005 after 1 year
3. *Normal-weight-concrete density = 150 lb/ft^3 for computing loads*
   = 145 lb/ft^3 for computing properties

MATERIAL PROPERTIES OF CONCRETE

Figure 405-1A

Back

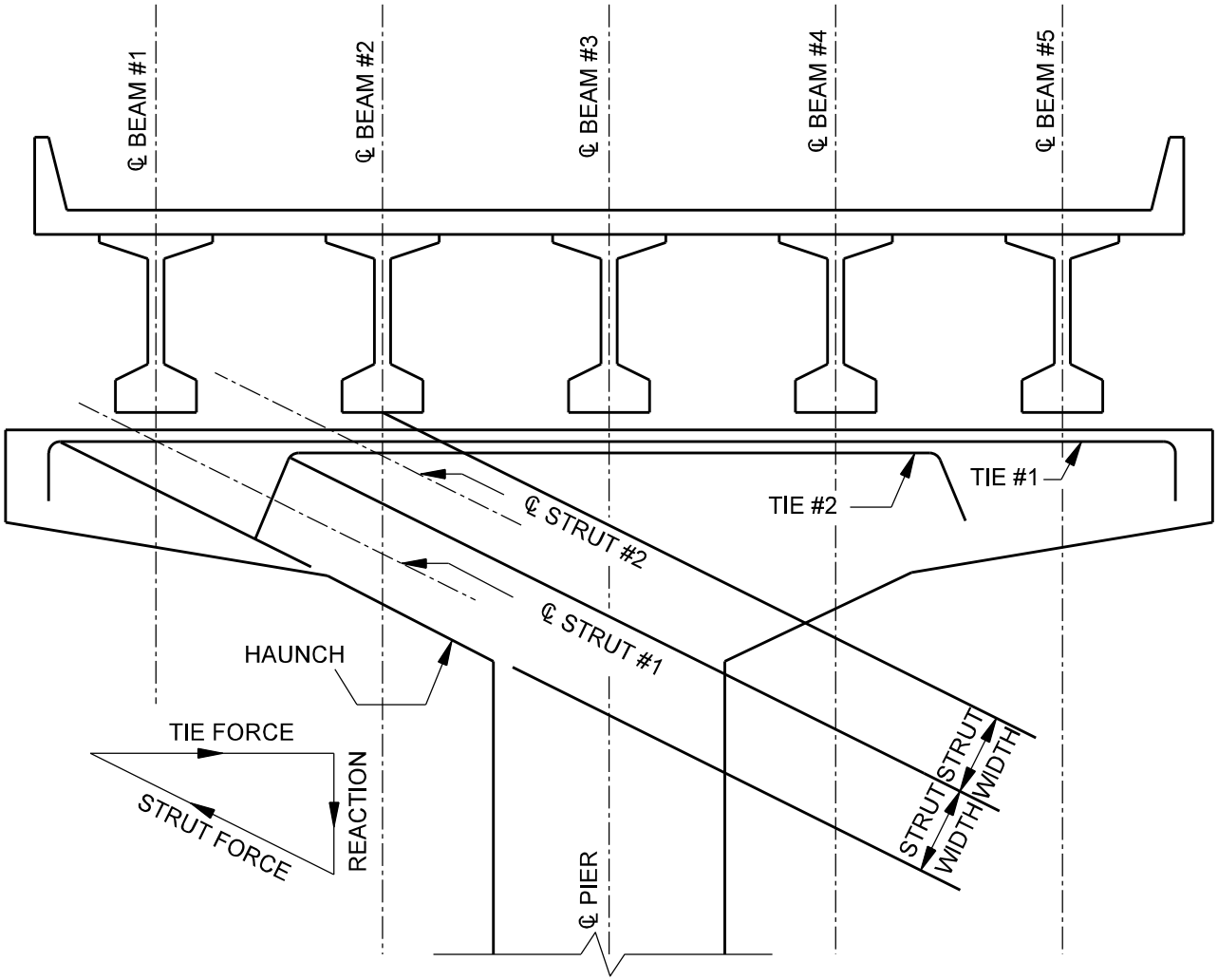

STRUT-AND-TIE MODEL FOR HAMMERHEAD PIER

Figure 405-1B

Back

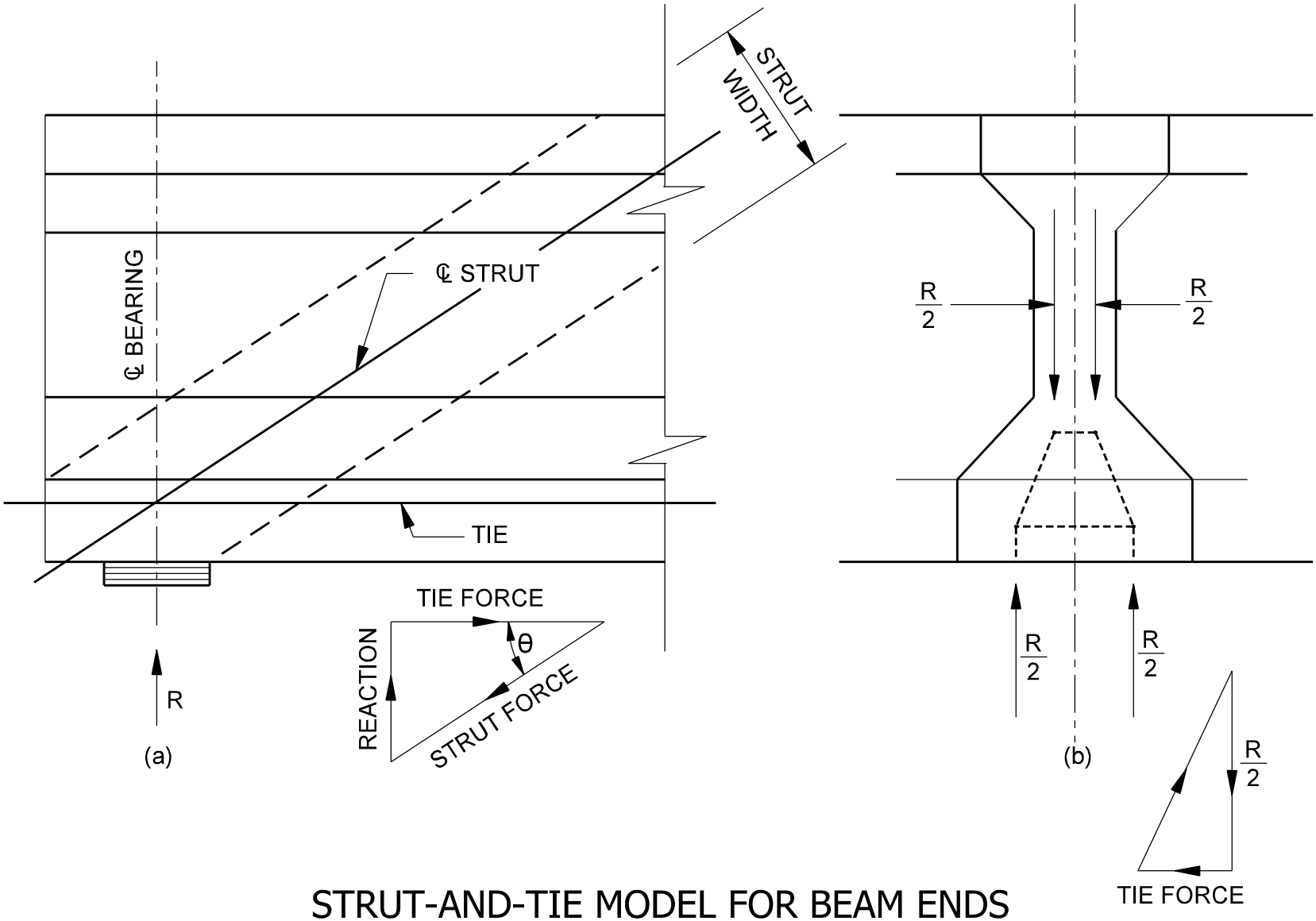

STRUT-AND-TIE MODEL FOR BEAM ENDS

Figure 405-1C

Back

Bar-Size Designation	Nominal Dimensions			Maximum Bar Length for Fabrication (ft)	Preferred Maximum Bar Length for Detailing (ft)
	Weight (lb/ft)	Diameter (in)	Area (in^2)		
#3*	0.376	0.375	0.11	35	30
#4*	0.668	0.500	0.20	35	30
#5	1.043	0.625	0.31	45	40
#6	1.502	0.750	0.44	45	40
#7	2.044	0.875	0.60	45	40
#8	2.670	1.000	0.79	45	40
#9	3.400	1.128	1.00	45	40
#10	4.303	1.270	1.27	45	40
#11	5.313	1.410	1.56	45	40
#14	7.650	1.693	2.25	45	40
#18	13.600	2.257	4.00	45	40

**Maximum bar length does not apply to spiral bars.*

REINFORCING-BAR SIZES

Figure 405-2A

Back

Bar Size	Area (in.^{2})	4	5	6	7	8	9	10	11	12	13	14	15	16	17	18
#3	0.11	0.33	0.26	0.22	0.19	0.17	0.15	0.13	0.12	0.11	0.10	0.09	0.09	0.08	0.08	0.07
#4	0.20	0.60	0.48	0.40	0.34	0.30	0.27	0.24	0.22	0.20	0.18	0.17	0.16	0.15	0.14	0.13
#5	0.31	0.93	0.74	0.62	0.53	0.47	0.41	0.37	0.34	0.31	0.29	0.27	0.25	0.23	0.22	0.21
#6	0.44	1.32	1.06	0.88	0.75	0.66	0.59	0.53	0.48	0.44	0.41	0.38	0.35	0.33	0.31	0.29
#7	0.60	1.80	1.44	1.20	1.03	0.90	0.80	0.72	0.65	0.60	0.55	0.51	0.48	0.45	0.42	0.40
#8	0.79	2.37	1.90	1.58	1.35	1.19	1.05	0.95	0.86	0.79	0.73	0.68	0.63	0.59	0.56	0.53
#9	1.00	3.00	2.40	2.00	1.71	1.50	1.33	1.20	1.09	1.00	0.92	0.86	0.80	0.75	0.71	0.67
#10	1.27	3.81	3.05	2.54	2.18	1.91	1.69	1.52	1.39	1.27	1.17	1.09	1.02	0.95	0.90	0.85
#11	1.56	4.68	3.74	3.12	2.67	2.34	2.08	1.87	1.70	1.56	1.44	1.34	1.25	1.17	1.10	1.04
#14	2.25		5.40	4.50	3.86	3.38	3.00	2.70	2.45	2.25	2.08	1.93	1.80	1.69	1.59	1.50
#18	4.00		9.60	8.00	6.86	6.00	5.33	4.80	4.36	4.00	3.69	3.43	3.20	3.00	2.82	2.67

REINFORCING BARS
Area (in.^{2}) Per One-Foot Section

Figure 405-2B

Back

Item	Cover
Deck or Reinforced-Concrete Slab:	
Top Bars	2½ *
Bottom Bars	1
Ends of Slab	2
Faces of Copings	2
Footing:	
General	3
Bottom Bars	4
Columns, Ties, and Stirrups	1½
All Other Structural Elements	2

** Includes a ½-in. sacrificial wearing surface.*

MINIMUM CONCRETE COVER (in.)
FOR DESIGN AND DETAILING

Figure 405-2C

Back

Bar Size	Minimum Center-to-Center Spacing	
	Unspliced Bars	Spliced Bars
#3	2	2¼
#4	2	2½
#5	2¼	2¾
#6	2¼	3
#7	2½	3¼
#8	2½	3½
#9	3	4
#10	3¼	4½
#11	3¾	5
#14	4¼	n/a
#18	5¾	n/a

Note: Minimum spacing value, rounded up to the nearest 1/4 in., should be based on LRFD Specifications Articles 5.10.3.1.1 and 5.10.3.1.4. The maximum size of coarse aggregate used in cast-in-place concrete is 1 in.

MINIMUM CENTER-TO-CENTER SPACING OF BARS (in.)

Figure 405-2D

Back

Bar Size	Area (in.^{2})	Top Bars (1)	Others (2)	Top Bars (3)	Others (4)
#3	0.11	1’-1”	1’-0”	1’-0”	1’-0”
#4	0.2	1’-5”	1’-0”	1’-2”	1’-0”
#5	0.31	1’-9”	1’-3”	1’-5”	1’-0”
#6	0.44	2’-3”	1’-8”	1’-10”	1’-4”
#7	0.6	3’-1”	2’-2”	2’-6”	1’-9”
#8	0.79	4’-0”	2’-11”	3’-3”	2’-4”
#9	1	5’-1”	3’-8”	4’-1”	2’-11”
#10	1.27	6’-5”	4’-7”	5’-2”	3’-8”
#11	1.56	7’-11”	5’-8”	6’-4”	4’-7”
#14	2.25	10’-11”	7’-10”	8’-9”	6’-3”
#18	4	14’-2”	10’-2”	11’-4”	8’-1”

Notes:

(1) $1.4 \times l_d$

(2) l_d

(3) $1.4 \times 0.8 \times l_d$

(4) $0.8 \times l_d$

MODIFICATION FACTORS FOR NORMAL-WEIGHT CONCRETE

1.4, for top horizontal or nearly-horizontal reinforcement, so placed that more than 12 in. of fresh concrete is cast below the reinforcement

0.8, for reinforcement being developed in the length under consideration spaced laterally not less than 6 in. center-to-center, with not less than 3 in. cover measured in the direction of the spacing

DEVELOPMENT LENGTH FOR UNCOATED BARS IN TENSION

f_c’ = 3 ksi

Figure 405-2E

Back

Bar Size	Area (in.^{2})	Top Bars (1)	Others (2)	Top Bars (3)	Others (4)
#3	0.11	1’-1”	1’-0”	1’-0”	1’-0”
#4	0.2	1’-5”	1’-0”	1’-2”	1’-0”
#5	0.31	1’-9”	1’-3”	1’-5”	1’-0”
#6	0.44	2’-2”	1’-6”	1’-9”	1’-3”
#7	0.6	2’-8”	1’-11”	2’-2”	1’-6”
#8	0.79	3’-6”	2’-6”	2’-10”	2’-0”
#9	1	4’-5”	3’-2”	3’-6”	2’-6”
#10	1.27	5’-7”	4’-0”	4’-6”	3’-3”
#11	1.56	6’-10”	4’-11”	5’-6”	3’-11”
#14	2.25	9’-6”	6’-9”	7’-7”	5’-5”
#18	4	12’-3”	8’-9”	9’-10”	7’-0”

Notes:

(1) 1.4 x l_d

(2) l_d

(3) 1.4 x 0.8 x l_d

(4) 0.8 x l_d

MODIFICATION FACTORS FOR NORMAL-WEIGHT CONCRETE

1.4, for top horizontal or nearly-horizontal reinforcement, so placed that more than 12 in. of fresh concrete is cast below the reinforcement

0.8, for reinforcement being developed in the length under consideration spaced laterally not less than 6 in. center-to-center, with not less than 3 in. cover measured in the direction of the spacing

DEVELOPMENT LENGTHS FOR UNCOATED BARS IN TENSION

f_c’ = 4 ksi

Figure 405-2F

Back

Bar Size	Area (in.^{2})	Top Bars (1)	Others (2)	Top Bars (3)	Others (4)
#3	0.11	1’-4”	1’-2”	1’-1”	1’-0”
#4	0.2	1’-9”	1’-6”	1’-5”	1’-3”
#5	0.31	2’-2”	1’-11”	1’-9”	1’-6”
#6	0.44	2’-9”	2’-5”	2’-2”	1’-11”
#7	0.6	3’-9”	3’-3”	3’-0”	2’-8”
#8	0.79	4’-11”	4’-4”	3’-11”	3’-6”
#9	1	6’-2”	5’-5”	4’-11”	4’-4”
#10	1.27	7’-10”	6’-11”	6’-3”	5’-6”
#11	1.56	9’-7”	8’-6”	7’-8”	6’-10”
#14	2.25	13’-4”	11’-9”	10’-8”	9’-5”
#18	4	17’-3”	15’-2”	13’-9”	12’-2”

Notes:

(1) $1.7 \times l_d$

(2) $1.5 \times l_d$

(3) $1.7 \times 0.8 \times l_d$

(4) $1.5 \times 0.8 \times l_d$

MODIFICATION FACTORS FOR NORMAL-WEIGHT CONCRETE

1.5, for epoxy-coated bars with cover less than $3d_b$, or with clear spacing between bars less than $6d_b$

0.8, for reinforcement being developed in the length under consideration spaced laterally not less than 6 in. center-to-center, with not less than 3 in. cover measured in the direction of the spacing

The product obtained in combining the factor for top reinforcement with the applicable factor for epoxy-coated bars need not be taken as greater than 1.7.

DEVELOPMENT LENGTHS FOR EPOXY-COATED BARS IN TENSION

f_c’ = 3 ksi

Figure 405-2G

Back

Bar Size	Area (in.^{2})	Top Bars (1)	Others (2)	Top Bars (3)	Others (4)
#3	0.11	1’-4”	1’-2”	1’-1”	1’-0”
#4	0.2	1’-9”	1’-6”	1’-5”	1’-3”
#5	0.31	2’-2”	1’-11”	1’-9”	1’-6”
#6	0.44	2’-7”	2’-3”	2’-1”	1’-10”
#7	0.6	3’-3’	2’-10”	2’-7”	2’-3”
#8	0.79	4’-3”	3’-9”	3’-5”	3’-0”
#9	1	5’-4”	4’-9”	4’-3”	3’-9”
#10	1.27	6’-9”	6’-0”	5’-5”	4’-10”
#11	1.56	8’-4”	7’-4”	6’-8”	5’-11”
#14	2.25	11’-6”	10’-2”	9’-3”	8’-2”
#18	4	14’-11”	13’-2”	11’-11”	10’-6”

Notes:

(1) 1.7 x l_d

(2) 1.5 x l_d

(3) 1.7 x 0.8 x l_d

(4) 1.5 x 0.8 x l_d

MODIFICATION FACTORS FOR NORMAL-WEIGHT CONCRETE

1.5, for epoxy-coated bars with cover less than $3d_b$, or with clear spacing between bars less than $6d_b$

0.8, for reinforcement being developed in the length under consideration spaced laterally not less than 6 in. center-to-center, with not less than 3 in. cover measured in the direction of the spacing

The product obtained in combining the factor for top reinforcement with the applicable factor for epoxy-coated bars need not be taken as greater than 1.7.

DEVELOPMENT LENGTHS FOR EPOXY-COATED BARS IN TENSION

f_c’ = 4 ksi

Figure 405-2H

Back

Bar Size	l_{dh} Side Cover < 2.5 in., or Cover on Hook < 2 in. $l_{dh} = l_{hb}$	l_{dh} Side Cover ≥ 2.5 in., or Cover on Hook ≥ 2 in. $l_{dh} = 0.7\ l_{hb}$
#3	9”	6”
#4	11”	8”
#5	1’-2”	10”
#6	1’-5”	1’-0”
#7	1’-8”	1’-2”
#8	1’-10”	1’-4”
#9	2’-1”	1’-6”
#10	2’-4”	1’-8”
#11	2’-7”	1’-10”
#14	3’-2”	n/a
#18	4’-2”	n/a

HOOKED UNCOATED-BAR DEVELOPMENT LENGTHS, TENSION
f_c’ = 3 ksi

Figure 405-2 I

Back

Bar Size	l_{dh} Side Cover < 2.5 in., or Cover on Hook < 2 in. $l_{dh} = l_{hb}$	l_{dh} Side Cover ≥ 2.5 in., or Cover on Hook ≥ 2 in.. $l_{dh} = 0.7\ l_{hb}$
#3	8”	6”
#4	10”	7”
#5	1’-0”	9”
#6	1’-3”	10”
#7	1’-5”	1’-0”
#8	1’-7”	1’-2”
#9	1’-10”	1’-4”
#10	2’-1”	1’-5”
#11	2’-3”	1’-7”
#14	2’-9”	n/a
#18	3’-7”	n/a

HOOKED UNCOATED-BAR DEVELOPMENT LENGTHS, TENSION
f_c’ = 4 ksi

Figure 405-2J

Back

Bar Size	l_{dh} Side Cover < 2.5 in., or Cover on Hook < 2 in. $l_{dh} = l_{hb}$	l_{dh} Side Cover ≥ 2.5 in., or Cover on Hook ≥ 2 in. $l_{dh} = 0.7\ l_{hb}$
#3	10”	7”
#4	1’-2”	10”
#5	1’-5”	1’-0”
#6	1’-8”	1’-2”
#7	2’-0”	1’-5”
#8	2’-3”	1’-7”
#9	2’-6”	1’-9”
#10	2’-10”	2’-0”
#11	3’-2”	2’-2”
#14	3’-9”	n/a
#18	5’-0”	n/a

HOOKED EPOXY-COATED-BAR DEVELOPMENT LENGTHS, TENSION
f_c’ = 3 ksi

Figure 405-2K

Back

Bar Size	l_{dh} Side Cover < 2.5 in., or Cover on Hook < 2 in. $l_{dh} = l_{hb}$	l_{dh} Side Cover ≥ 2.5 in., or Cover on Hook ≥ 2 in. $l_{dh} = 0.7\ l_{hb}$
#3	9”	6”
#4	1’-0”	8”
#5	1’-3”	10”
#6	1’-6”	1’-0”
#7	1’-8”	1’-2”
#8	1’-11”	1’-4”
#9	2’-2”	1’-7”
#10	2’-5”	1’-9”
#11	2’-9”	1’-11”
#14	3’-3”	n/a
#18	4’-4”	n/a

HOOKED EPOXY-COATED-BAR DEVELOPMENT LENGTHS, TENSION
f_c’ = 4 ksi

Figure 405-2L

Back

Bar Size	Center to Center Spacing < 6 in., or Cover < 3 in.		Center to Center Spacing ≥ 6 in., or Cover ≥ 3 in.	
	Top Bars	Others	Top Bars	Others
#3	1’-1”	1’-0”	1’-0”	1’-0”
#4	1’-5”	1’-0”	1’-2”	1’-0”
#5	1’-9”	1’-3”	1’-5”	1’-0”
#6	2’-3”	1’-8”	1’-10”	1’-4”
#7	3’-1”	2’-2”	2’-6”	1’-9”
#8	4’-0”	2’-11”	3’-3”	2’-4”
#9	5’-1”	3’-8”	4’-1”	2’-11”
#10	6’-5”	4’-7”	5’-2”	3’-8”
#11	7’-11”	5’-8”	6’-4”	4’-7”

Notes:

1. All splice lengths in feet and inches
2. d_b < Cover
3. $2d_b$ < Clear Spacing
4. Values are for normal weight concrete.

CLASS A SPLICE LENGTH FOR UNCOATED BARS IN TENSION
f_c’ = 3 ksi

Figure 405-2M

Back

Bar Size	Center to Center Spacing < 6 in., or Cover < 3 in.		Center to Center Spacing ≥ 6 in., or Cover ≥ 3 in.	
	Top Bars	Others	Top Bars	Others
#3	1’-1”	1’-0”	1’-0”	1’-0”
#4	1’-5”	1’-0”	1’-2”	1’-0”
#5	1’-9”	1’-3”	1’-5”	1’-0”
#6	2’-2”	1’-6”	1’-9”	1’-3”
#7	2’-8”	1’-11”	2’-2”	1’-6”
#8	3’-6”	2’-6”	2’-10”	2’-0”
#9	4’-5”	3’-2”	3’-6”	2’-6”
#10	5’-7”	4’-0”	4’-6”	3’-3”
#11	6’-10”	4’-11”	5’-6”	3’-11”

Notes:

1. d_b < Cover
2. $2d_b$ < Clear Spacing
3. Value is for normal-weight concrete.

CLASS A SPLICE LENGTH FOR UNCOATED BARS IN TENSION
f_c’ = 4 ksi

Figure 405-2N

Back

Bar Size	Center to Center Spacing < 6 in., or Cover < 3 in.		Center to Center Spacing ≥ 6 in., or Cover ≥ 3 in.	
	Top Bars	Others	Top Bars	Others
#3	1’-4”	1’-2”	1’-1”	1’-0”
#4	1’-9”	1’-6”	1’-5”	1’-3”
#5	2’-2”	1’-11”	1’-9”	1’-6”
#6	2’-9”	2’-5”	2’-2”	1’-11’
#7	3’-9”	3’-3”	3’-0”	2’-8”
#8	4’-11”	4’-4”	3’-11”	3’-6”
#9	6’-2”	5’-5”	4’-11”	4’-4”
#10	7’-10”	6’-11”	6’-3”	5’-6”
#11	9’-7”	8’-6”	7’-8”	6’-10”

Notes:

1. $d_b \leq$ Cover $< 3d_b$
2. $2d_b \leq$ Clear Spacing $< 6d_b$
3. Value is for normal-weight concrete.

CLASS A SPLICE LENGTH FOR EPOXY-COATED BARS IN TENSION
f_c’ = 3 ksi

Figure 405-2 O

Back

Bar Size	Center to Center Spacing < 6 in., or Cover < 3 in.		Center to Center Spacing ≥ 6 in., or Cover ≥ 3 in.	
	Top Bars	Others	Top Bars	Others
#3	1’-4”	1’-2”	1’-1”	1’-0”
#4	1’-9”	1’-6”	1’-5”	1’-3”
#5	2’-2”	1’-11”	1’-9”	1’-6”
#6	2’-7”	2’-3”	2’-1”	1’-10”
#7	3’-3”	2’-10”	2’-7”	2’-3”
#8	4’-3”	3’-9”	3’-5”	3’-0”
#9	5’-4”	4’-9”	4’-3”	3’-9”
#10	6’-9”	6’-0”	5’-5”	4’-10”
#11	8’-4”	7’-4”	6’-8”	5’-11”

Notes:

1. $d_b \leq$ Cover $< 3d_b$
2. $2d_b \leq$ Clear Spacing $< 6d_b$
3. Value is for normal-weight concrete.

CLASS A SPLICE LENGTH FOR EPOXY-COATED BARS IN TENSION
f_c’ = 4 ksi

Figure 405-2P

Back

Bar Size	Center to Center Spacing < 6 in., or Cover < 3 in.		Center to Center Spacing ≥ 6 in., or Cover ≥ 3 in.	
	Top Bars	Others	Top Bars	Others
#3	1’-5”	1’-0”	1’-2”	1’-0”
#4	1’-10”	1’-4”	1’-6”	1’-1”
#5	2’-4”	1’-8”	1’-10”	1’-4”
#6	2’-11”	2’-1”	2’-4”	1’-8”
#7	4’-0”	2’-10”	3’-2”	2’-4”
#8	5’-3”	3’-9”	4’-2”	3’-0”
#9	6’-7”	4’-9”	5’-4”	3’-10”
#10	8’-5”	6’-0”	6’-9”	4’-10”
#11	10’-3”	7’-4”	8’-3”	5’-11”

Notes:

1. d_b < Cover
2. $2d_b$ < Clear Spacing
3. Value is for normal-weight concrete.

CLASS B SPLICE LENGTH FOR UNCOATED BARS IN TENSION
f_c’ = 3 ksi

Figure 405-2Q

Back

Bar Size	Center to Center Spacing < 6 in., or Cover < 3 in.		Center to Center Spacing ≥ 6 in., or Cover ≥ 3 in.	
	Top Bars	Others	Top Bars	Others
#3	1’-5”	1’-0”	1’-2”	1’-0”
#4	1’-10”	1’-4”	1’-6”	1’-1”
#5	2’-4”	1’-8”	1’-10”	1’-4”
#6	2’-9”	2’-0”	2’-3”	1’-7”
#7	3’-5”	2’-6”	2’-9”	2’-0”
#8	4’-6”	3’-3”	3’-8”	2’-7”
#9	5’-9”	4’-1”	4’-7”	3’-3”
#10	7’-3”	5’-2”	5’-10”	4’-2”
#11	8’-11”	6’-5”	7’-2”	5’-1”

Notes:

1. d_b < Cover
2. $2d_b$ < Clear Spacing
3. Value is for normal-weight concrete.

CLASS B SPLICE LENGTH FOR UNCOATED BARS IN TENSION
f_c’ = 4 ksi

Figure 405-2R

Back

Bar Size	Center to Center Spacing < 6 in., or Cover < 3 in.		Center to Center Spacing ≥ 6 in., or Cover ≥ 3 in.	
	Top Bars	Others	Top Bars	Others
#3	1’-8”	1’-6”	1’-4”	1’-3”
#4	2’-3”	2’-0”	1’-10”	1’-7”
#5	2’-10”	2’-6”	2’-3”	2’-0”
#6	3’-7”	3’-2”	2’-10”	2’-6”
#7	4’-10”	4’-3”	3’-10”	3’-5”
#8	6’-4”	5’-7”	5’-1”	4’-6”
#9	8’-0”	7’-1”	6’-5”	5’-8”
#10	10’-2”	9’-0”	8’-2”	7’-2”
#11	12’-6”	11’-0”	10’-0”	8’-10”

Notes:

1. $d_b \leq$ Cover $< 3d_b$
2. $2d_b \leq$ Clear Spacing $< 6d_b$
3. Value is for normal-weight concrete.

CLASS B SPLICE LENGTH FOR EPOXY-COATED BARS IN TENSION
f_c’ = 3 ksi

Figure 405-2 S

Back

Bar Size	Center to Center Spacing < 6 in., or Cover < 3 in.		Center to Center Spacing ≥ 6 in., or Cover ≥ 3 in.	
	Top Bars	Others	Top Bars	Others
#3	1’-8”	1’-6”	1’-4”	1’-3”
#4	2’-3”	2’-0”	1’-10”	1’-7”
#5	2’-10”	2’-6”	2’-3”	2’-0”
#6	3’-4”	3’-0”	2’-8”	2’-5”
#7	4’-2”	3’-8”	3’-4”	3’-0”
#8	5’-6”	4’-10”	4’-5”	3’-11”
#9	6’-11”	6’-2”	5’-7”	4’-11”
#10	8’-10”	7’-9”	7’-1”	6’-3”
#11	10’-10”	9’-7”	8’-8”	7’-8”

Notes:

1. $d_b \leq$ Cover $< 3d_b$
2. $2d_b \leq$ Clear Spacing $< 6d_b$
3. Value is for normal-weight concrete.

CLASS B SPLICE LENGTH FOR EPOXY-COATED BARS IN TENSION
f_c’ = 4 ksi

Figure 405-2T

Back

Bar Size	Center to Center Spacing < 6 in., or Cover < 3 in.		Center to Center Spacing ≥ 6 in., or Cover ≥ 3 in.	
	Top Bars	Others	Top Bars	Others
#3	1’-10”	1’-4”	1’-6”	1’-1”
#4	2’-5”	1’-9”	1’-11”	1’-5”
#5	3’-0”	2’-2”	2’-5”	1’-9”
#6	3’-10”	2’-9”	3’-1”	2’-2”
#7	5’-2”	3’-9”	4’-2”	3’-0”
#8	6’-10”	4’-11”	5’-6”	3’-11”
#9	8’-8”	6’-2”	6’-11”	4’-11”
#10	10’-11”	7’-10”	8’-9”	6’-3”
#11	13’-5”	9’-7”	10’-9”	7’-8”

Notes:

1. d_b < Cover
2. $2d_b$ < Clear Spacing
3. Value is for normal-weight concrete.

CLASS C SPLICE LENGTH FOR UNCOATED BARS IN TENSION
f_c’ = 3 ksi

Figure 405-2U

Back

Bar Size	Center to Center Spacing < 6 in., or Cover < 3 in.		Center to Center Spacing ≥ 6 in., or Cover ≥ 3 in.	
	Top Bars	Others	Top Bars	Others
#3	1’-10”	1’-4”	1’-6”	1’-1”
#4	2’-5”	1’-9”	1’-11”	1’-5”
#5	3’-0”	2’-2”	2’-5”	1’-9”
#6	3’-7”	2’-7”	2’-11”	2’-1”
#7	4’-6”	3’-3”	3’-7”	2’-7”
#8	5’-11”	4’-3”	4’-9”	3’-5”
#9	7’-6”	5’-4”	6’-0”	4’-3”
#10	9’-6”	6’-9”	7’-7”	5’-5”
#11	11’-8”	8’-4”	9’-4”	6’-8”

Notes:

1. d_b < Cover
2. $2d_b$ < Clear Spacing
3. Value is for normal-weight concrete.

CLASS C SPLICE LENGTH FOR UNCOATED BARS IN TENSION
f_c’ = 4 ksi

Figure 405-2V

Back

Bar Size	Center to Center Spacing < 6 in., or Cover < 3 in.		Center to Center Spacing ≥ 6 in., or Cover ≥ 3 in.	
	Top Bars	Others	Top Bars	Others
#3	2’-3”	1’-11”	1’-9”	1’-7”
#4	2’-11”	2’-7”	2’-4”	2’-1”
#5	3’-8”	3’-3”	2’-11”	2’-7”
#6	4’-8”	4’-1”	3’-9”	3’-3”
#7	6’-4”	5’-7”	5’-1”	4’-6”
#8	8’-3”	7’-4”	6’-8”	5’-10”
#9	10’-6”	9’-3”	8’-5”	7’-5”
#10	13’-3”	11’-9”	10’-8”	9’-5”
#11	16’-4”	14’-5”	13’-1”	11’-6”

Notes:

1. $d_b \leq$ Cover $< 3d_b$
2. $2d_b \leq$ Clear Spacing $< 6d_b$
3. Value is for normal-weight concrete.

CLASS C SPLICE LENGTH FOR EPOXY-COATED BARS IN TENSION
f_c’ = 3 ksi

Figure 405-2W

Back

Bar Size	Center to Center Spacing < 6 in., or Cover < 3 in.		Center to Center Spacing ≥ 6 in., or Cover ≥ 3 in.	
	Top Bars	Others	Top Bars	Others
#3	2’-3”	1’-11”	1’-9”	1’-7”
#4	2’-11”	2’-7”	2’-4”	2’-1”
#5	3’-8”	3’-3”	2’-11”	2’-7”
#6	4’-5”	3’-10”	3’-6”	3’-1”
#7	5’-6”	4’-10”	4’-5”	3’-10”
#8	7’-2”	6’-4”	5’-9”	5’-1”
#9	9’-1”	8’-0”	7’-3”	6’-5”
#10	11’-6”	10’-2”	9’-3”	8’-2”
#11	14’-2”	12’-6”	11’-4”	10’-0”

Notes:

1. $d_b \leq$ Cover $< 3d_b$
2. $2d_b \leq$ Clear Spacing $< 6d_b$
3. Value is for normal-weight concrete.

CLASS C SPLICE LENGTH FOR EPOXY-COATED BARS IN TENSION
f_c’ = 4 ksi

Figure 405-2X

Back

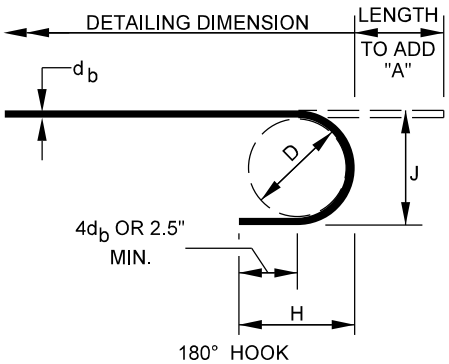

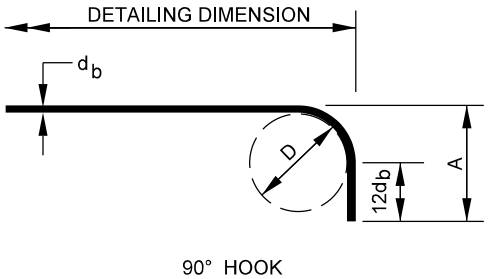

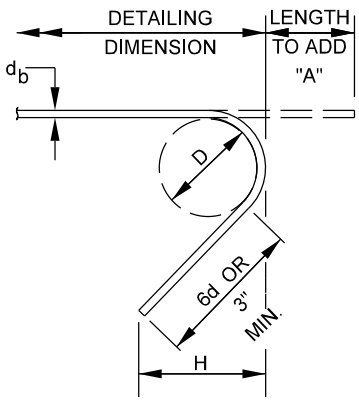

D = FINISHED INSIDE BEND DIAMETER
d_b = NOMINAL BAR DIAMETER

RECOMMENDED END HOOKS, ALL GRADES					
BAR SIZE	D	180° HOOKS			90° HOOKS
		A	J	H	A
#3	2"	5"	2.75"	4"	6"
#4	3"	6"	4"	4.5"	8"
#5	4"	7"	5.25"	5"	10"
#6	4.5"	8"	6"	6"	1'-0"
#7	5.5"	10"	7.25"	7"	1'-3"
#8	6"	11"	8"	8"	1'-5"
#9	10"	1'-3"	1'-0.25"	10"	1'-7"
#10	11"	1'-5"	1'-1.5"	11.5"	1'-10"
#11	1'-0"	1'-7"	1'-3"	1'-0.5"	2'-0"
#14	1'-6.3"	2'-3"	1'-9.5"	1'-5"	2'-7"
#18	2'-0"	3'-1"	2'-4.5"	1'-10.5"	3'-6"

SEISMIC TIE HOOKS			
BAR SIZE	135° SEISMIC HOOKS		
	A	J	H
#3	1.5"	4.25"	3"
#4	2"	4.5"	3.5"
#5	2.5"	5.5"	3.75"
#6	4.5"	8"	4.5"
#7	5.5"	9"	6"
#8	6"	10.5"	6"

Notes:

1. Show detailing dimension and total length of bent bar on the bending diagram in the plans.
   Do not show length to add (dimension "A") for 180 hooks or 135 seismic hooks. Do not show bend diameter unless it is not standard.
2. In computing total length of a bent bar with 90 hooks, do not deduct for bends.

HOOKS AND BENDS

Figure 405-2Y

Back

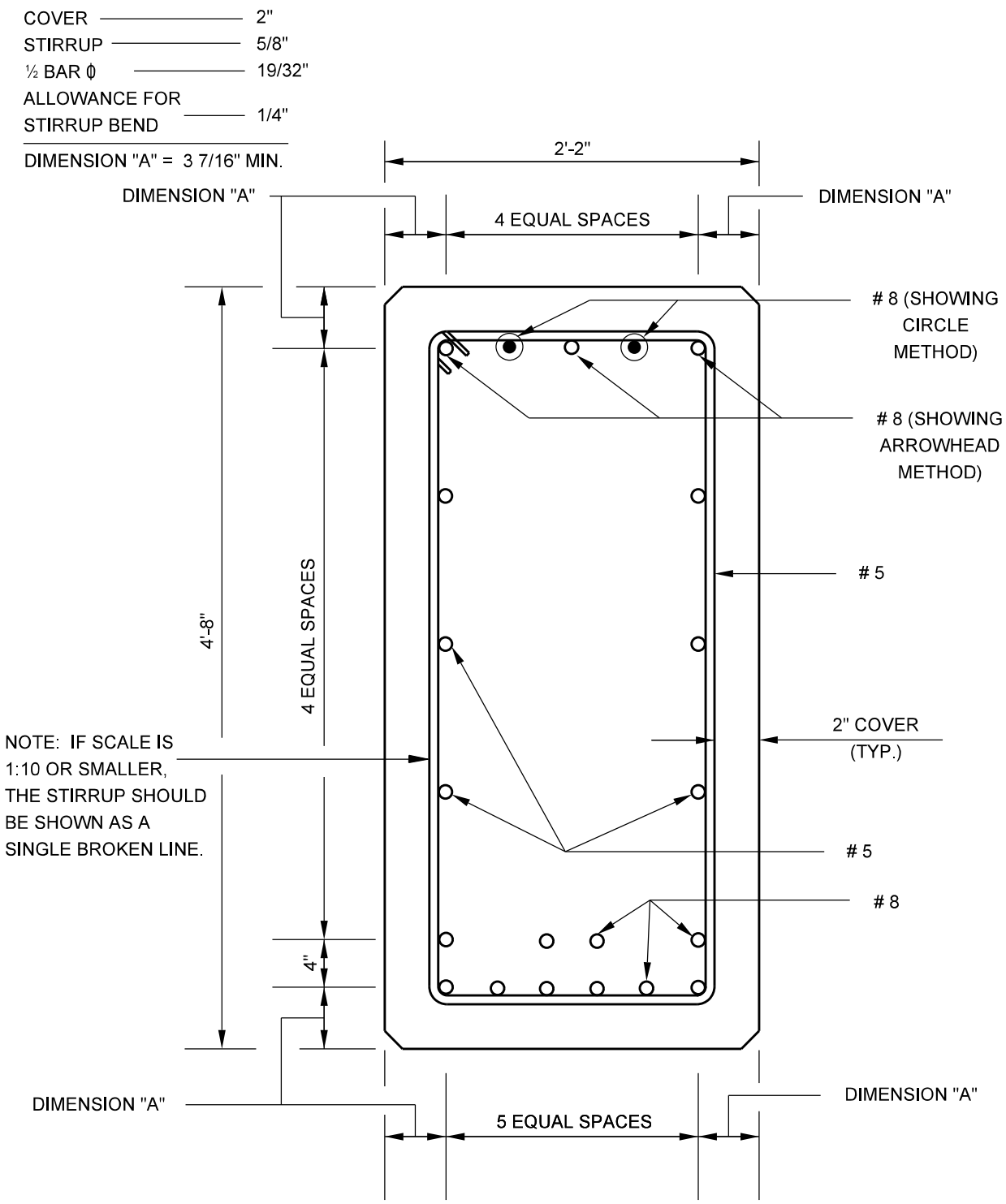

BARS IN SECTION
Figure 405-2Z

Back

EXAMPLE NO. 1

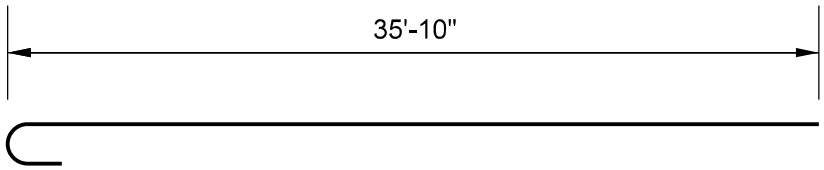

35'-10"
11" (180° HOOK)
36'-9"

802c X 36'-9"

EXAMPLE NO. 2

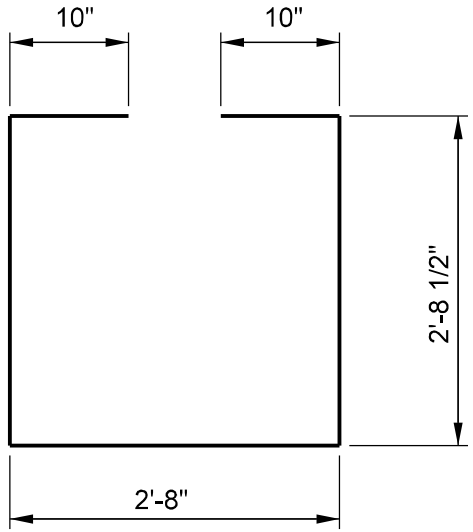

2'-8 1/2"
2'-8 1/2"
2'-8"
10" (90° HOOK)
10" (90° HOOK)
9'-9"

502c X 9'-9"

BENDING DIAGRAM EXAMPLES

Figure 405-2AA

Back

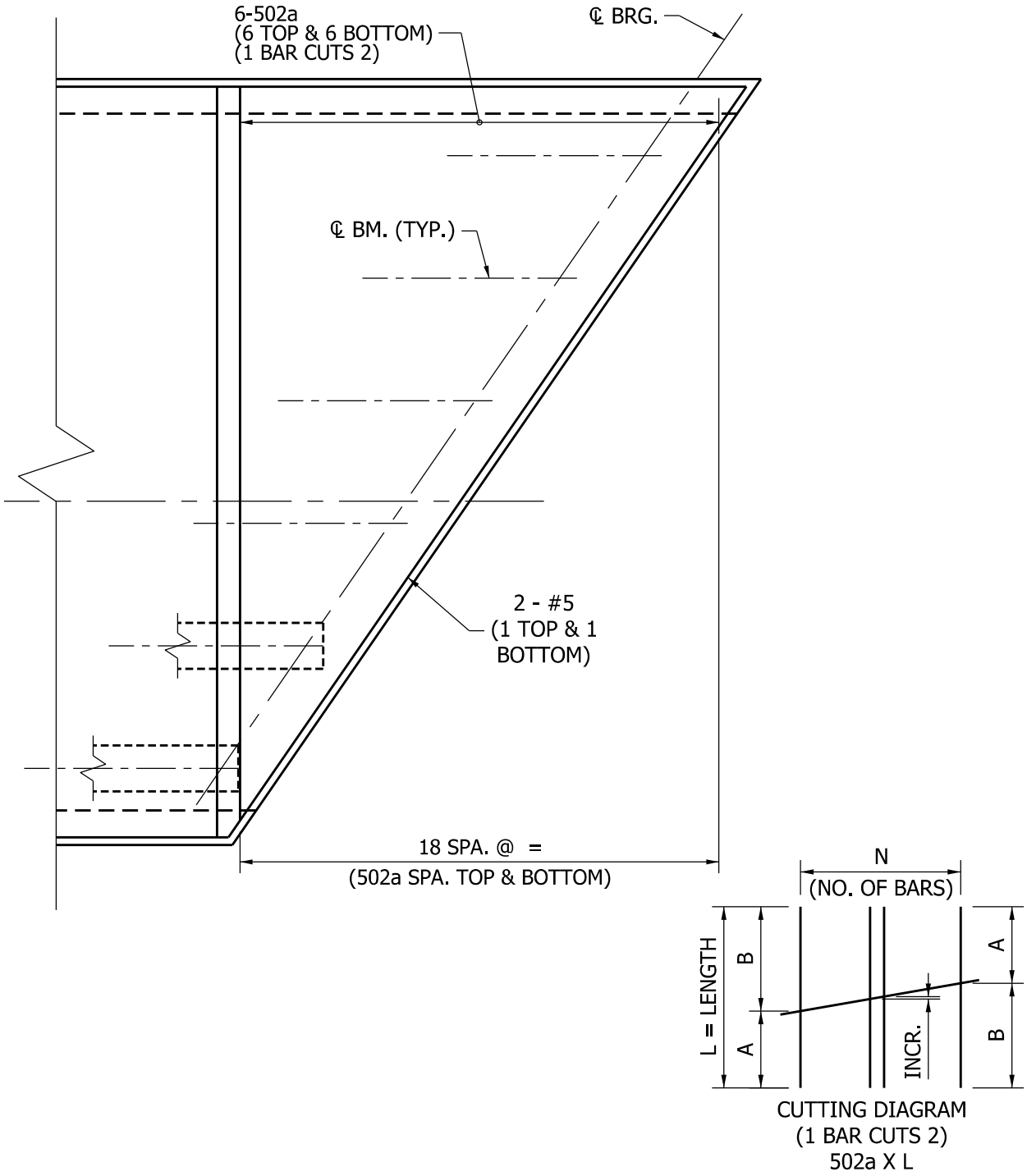

CUTTING DIAGRAM
(Transverse Steel in Bridge Deck)

Figure 405-2BB

Back

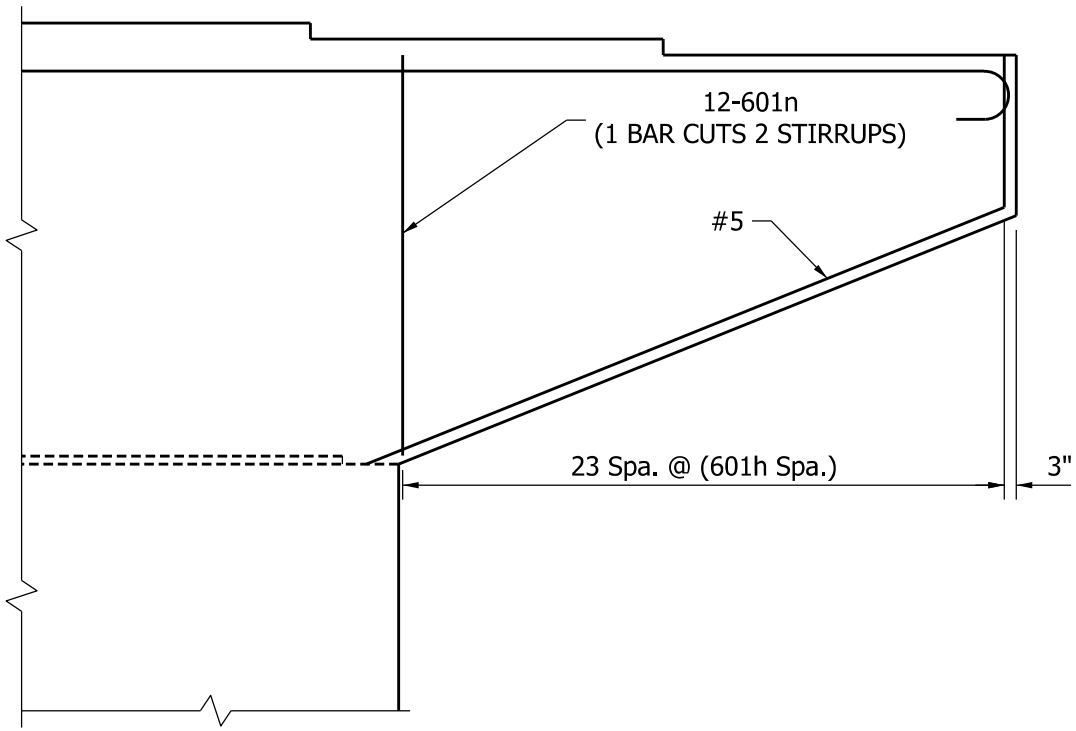

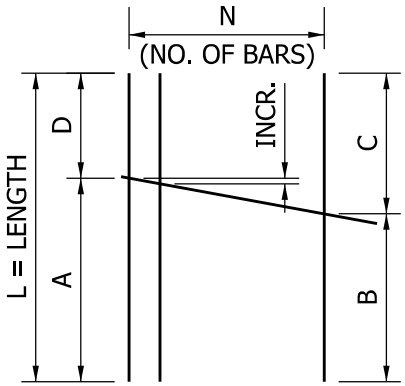

CUTTING DIAGRAM

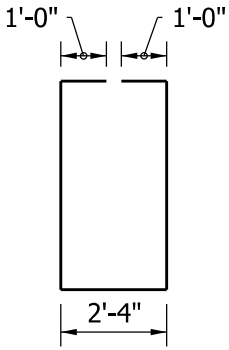

BENDING DIAGRAM

601n X L
(1 BAR CUTS 2 STIRRUPS)

NOTE:
A CUTTING DIAGRAM CAN ALSO BE USED WHEN STIRRUPS ARE PLACED AT TWO DIFFERENT SPACINGS WITH TWO SEPARATE BAR MARKS. "NO. OF BARS" AND CUTTING DIAGRAM DIMENSIONS FOR EACH BAR MARK CAN BE SHOWN IN A TABLE.

CUTTING DIAGRAM
(Hammerhead Stem Pier)

Figure 405-2CC

Back

R.C. BRIDGE APPROACH BILL OF MATERIALS

Plain Reinforcing Steel			
Size and Mark	No. of Bars	Length	Weight (lb)
503	69	19'-10"	
591	144	20'-7"	
#5	48	31'-0"	
#5	54	29'-4"	
#5	2	26'-0"	
#5	1	24'-8"	
#5	2	22'-0"	
#5	1	20'-8"	
#5	2	18'-4"	
#5	49	16'-8"	
#5	2	14'-4"	
#5	1	12'-8"	
#5	2	10'-4"	
#5	1	9'-0"	
#5	2	6'-4"	
#5	1	5'-0"	
Total No. 5			8853
401	14	3'-7"	
#4	2	19'-8"	
Total No. 4			63
Total Plain Reinforcing Steel			8916
Epoxy-Coated Reinforcing Steel			
#8	4	19'-8"	210
#7	4	19'-8"	161
502	5	20'-2"	
581	51	6'-9"	
591a	31	5'-7"	
593	62	4'-2"	
Total No. 5			914
Total Epoxy-Coated Reinforcing Steel			1285
Concrete			
Reinf.-Conc. Bridge Appr., 15 in.			2950 ft^2
Concrete Railing Class C			2.5 yd^2

REINFORCED-CONCRETE BRIDGE APPROACH BILL OF MATERIALS

Figure 405-2DD

Back

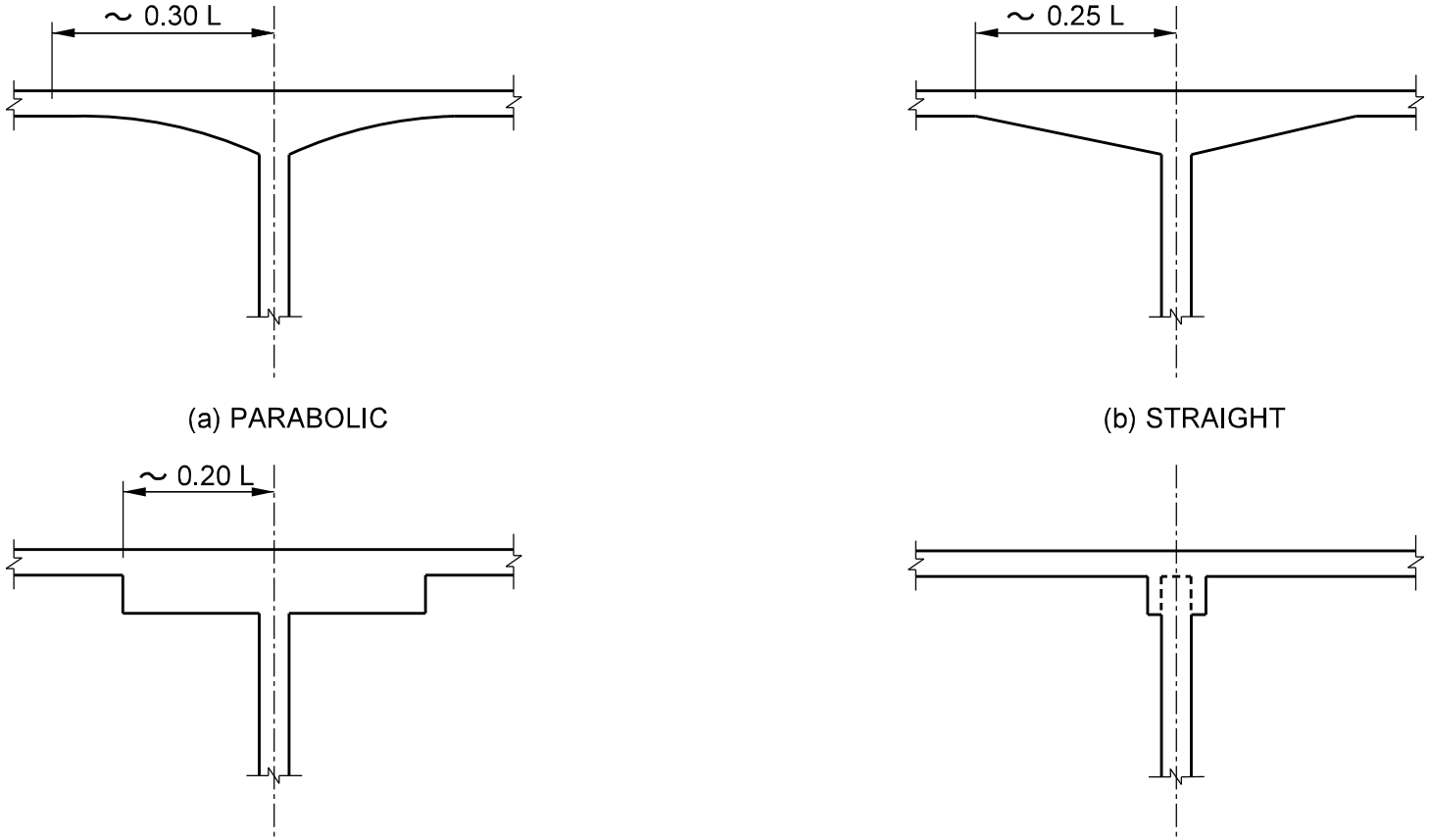

* THIS CONFIGURATION SHOULD NOT BE USED AS A STRUCTURAL HAUNCH

HAUNCH CONFIGURATIONS FOR REINFORCED CONCRETE SLAB SUPERTRUCTURES

Figure 405-3A

Back

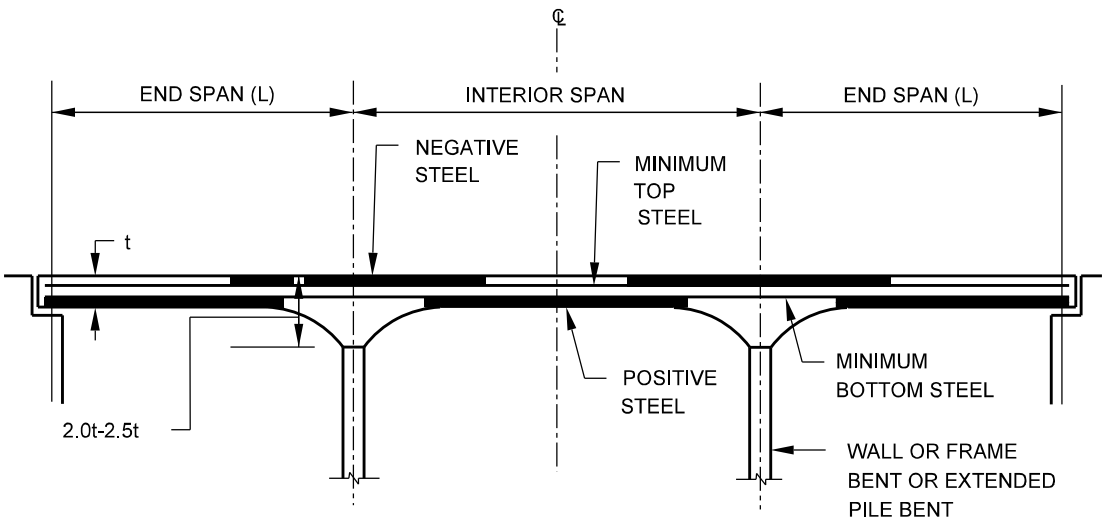

ELEVATION

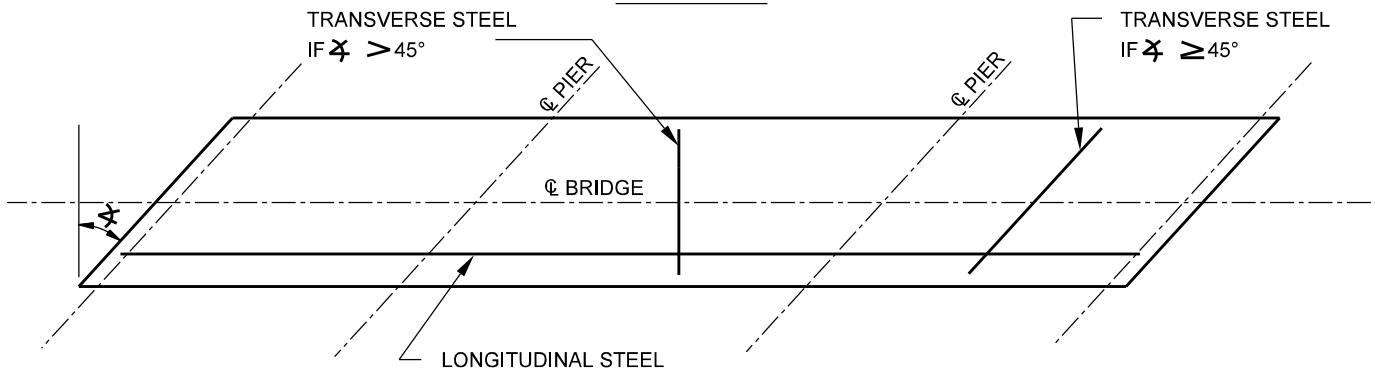

PLAN

RECTANGULAR, SKEWED AND/OR CURVED LAYOUT

TYPICAL REINFORCED CONCRETE SLAB SUPERSTRUCTURE

Figure 405-3B

Back

Slab Thickness (in.)	Reinforcement, Top and Bottom
< 18	#5 @ 1’-6” or #4 @ 1’-0”
18 ≤ Thick. ≤ 28	#5 @ 1’-0” or #4 @ 8”
> 28	Design per *LRFD* Article 5.10.8.2

SHRINKAGE AND TEMPERATURE REINFORCEMENT FOR SLAB SUPERSTRUCTURE

Figure 405-3C

Back

NOTE: Entire typical section to be detailed on plans.

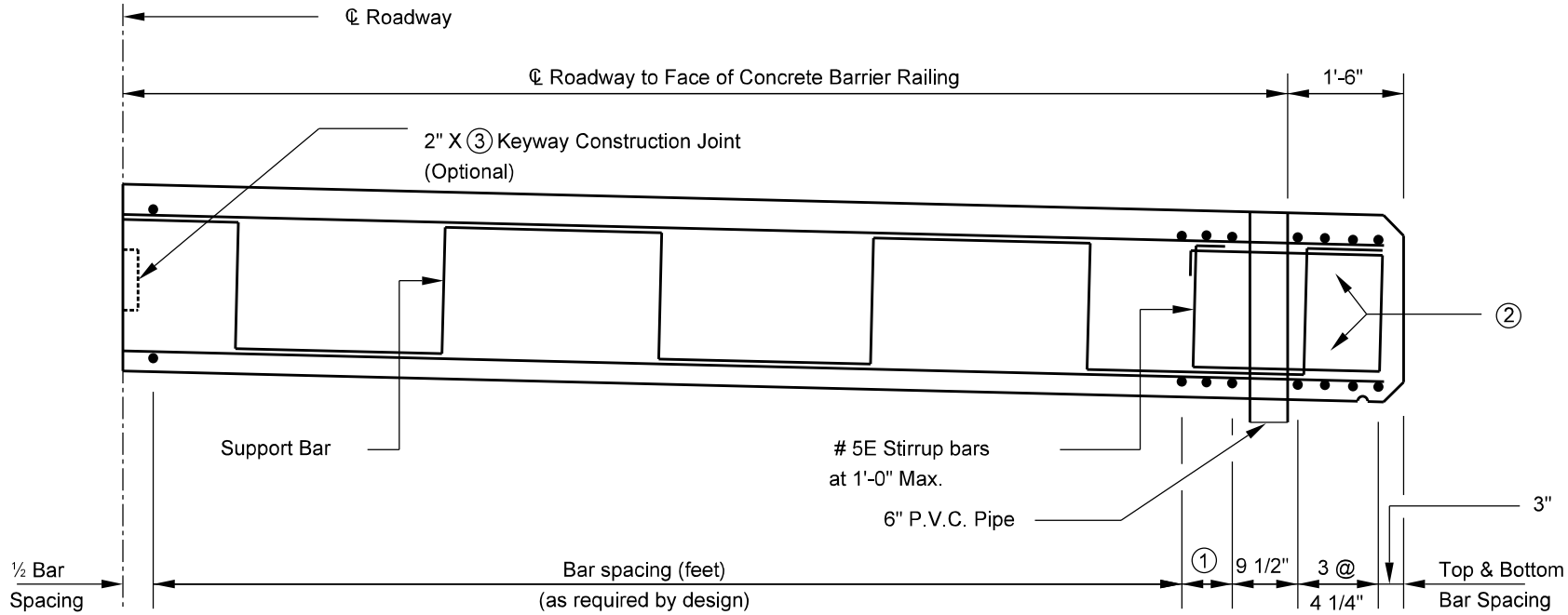

① Bar spacing and number of spaces to be determined to facilitate a constant bar spacing in remainder of slab.

② Design edge beam in accordance with articles in the LRFD Specifications, but use as a minimum the same area of steel per foot as in slab.

③ For depth of keyway, use on-third the slab thickness.

INTEGRAL CAP AT SLAB SUPERSTRUCTURE
(Typical Half-Section)

Figure 405-3D

Back

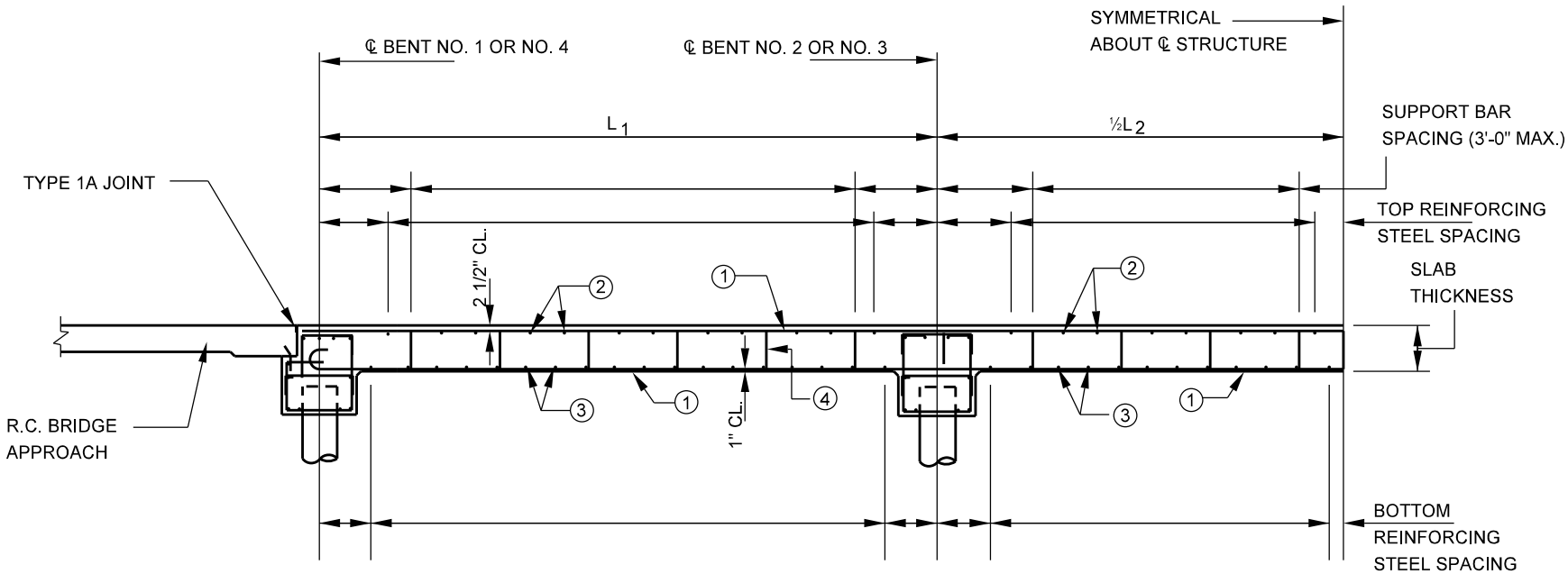

① LONGITUDINAL BARS AS REQUIRED FOR DESIGN.

② SHRINKAGE AND TEMPERATURE REINFORCEMENT (SEE FIGURE 62-3D)

③ DISTRIBUTION REINFORCEMENT IN ACCORDANCE WITH LRFD ARTICLE 5.14.4.1.

④ SUPPORT BARS (MAX. SPACING 3'-0")

LONGITUDINAL STEEL BAR SIZE	SUPPORT BAR SIZE
# 6 OR 7	# 5
# 8	# 6
# 9	# 6
# 10 OR LARGER	# 7

INTEGRAL CAPS AT SLAB SUPERSTRUCTURE
(Half Longitudinal Section)

Figure 405-3E

Back

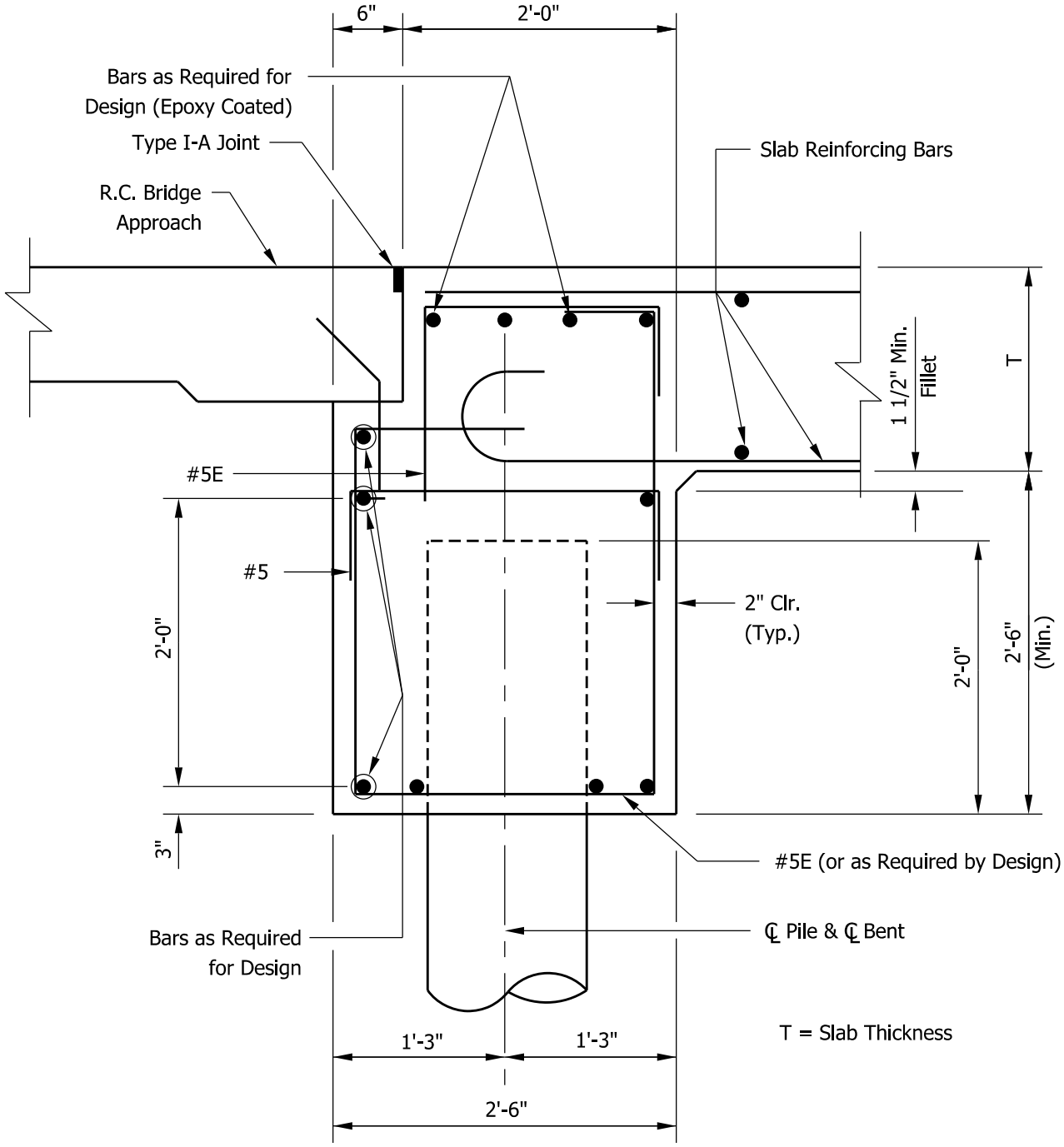

INTEGRAL CAP AT SLAB SUPERSTRUCTURE
(Section Through End Bent)

Figure 405-3F

Back

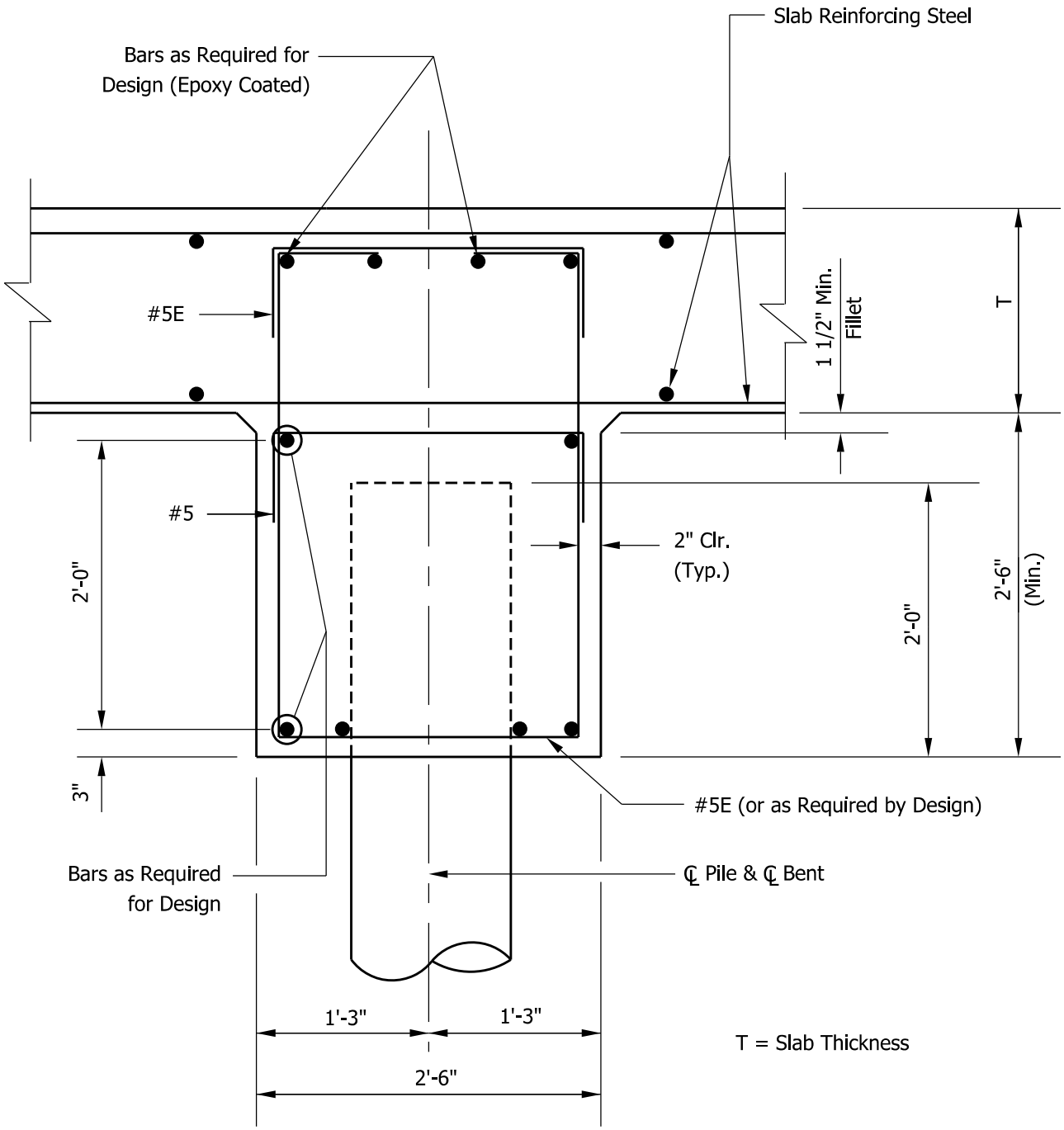

INTEGRAL CAP AT SLAB SUPERSTRUCTURE
(Section Through Interior Bent)

Figure 405-3G

Back