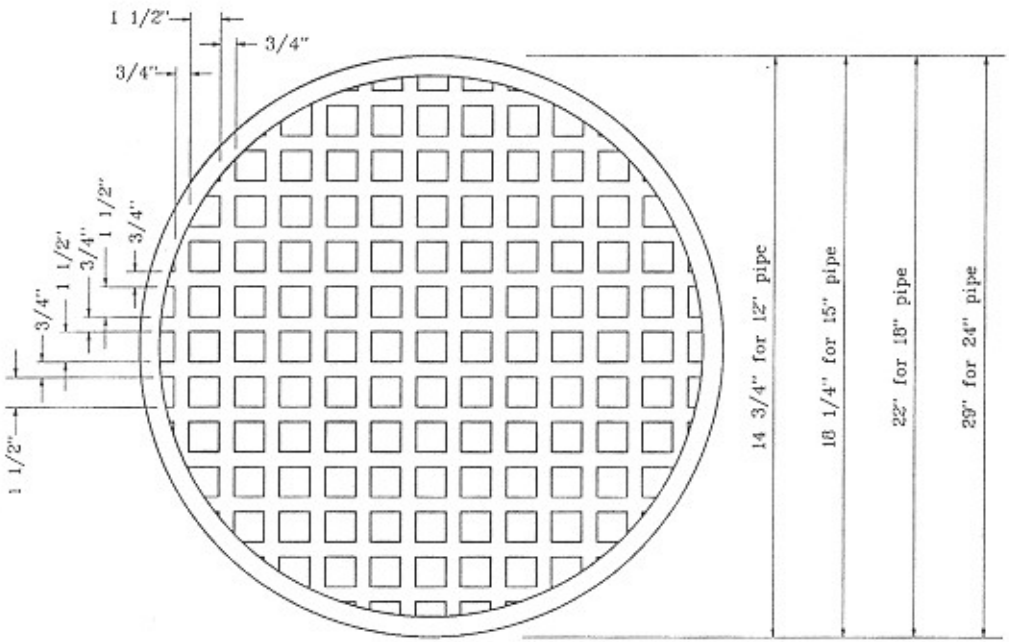

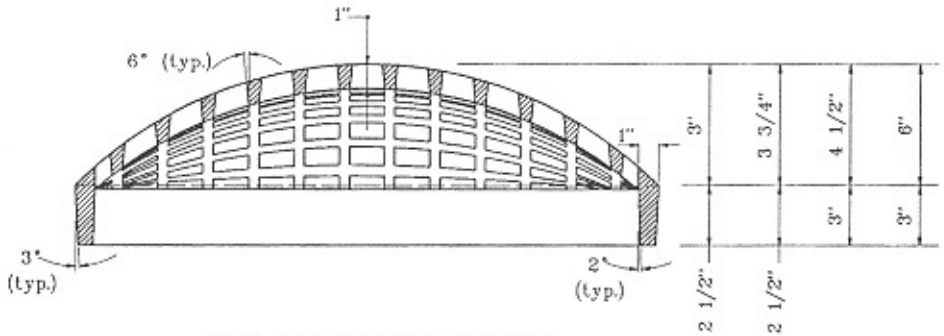

PIPE CATCH BASIN CASTING

INDIANA DEPARTMENT OF TRANSPORTATION

PIPE CATCH BASIN CASTING

APRIL 1995

STANDARD DRAWING NO. **E 720-CBCA-01**

ANTHONY L. URENOVICH REGISTERED No. 18095 STATE OF INDIANA PROFESSIONAL ENGINEER

DESIGN STANDARDS ENGINEER

DETAILS PLACED IN THIS FORMAT 11-15-99

/s/ Anthony L. Urenovich 11-15-99
DESIGN STANDARDS ENGINEER DATE

/s/ Firoos Dandi 11-15-99
CHIEF HIGHWAY ENGINEER DATE

ORIGINALLY APPROVED 4-03-95

GENERAL NOTES

1. Brick, block, or concrete may be used.
2. Precast catch basin type W may be substituted for catch basin type A.
3. (3) 2" dia. pipe drain from bottom of curb to inlet. Aggregate to be placed around inlet end of pipe.
4. (4) 3" dia. pipe to be kept open for drainage of subgrade or base until surface is placed.
5. Reinforcement required if Dim. A < 2'-6. Reinforcement not required if Dim. A ≥ 2'-6.

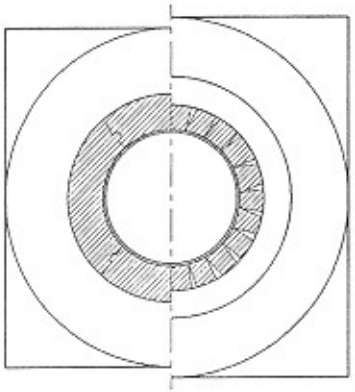

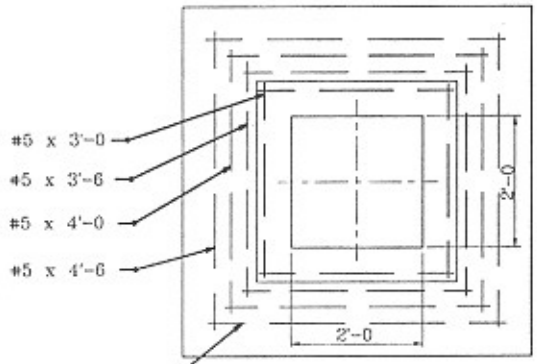

#5 ea. layer

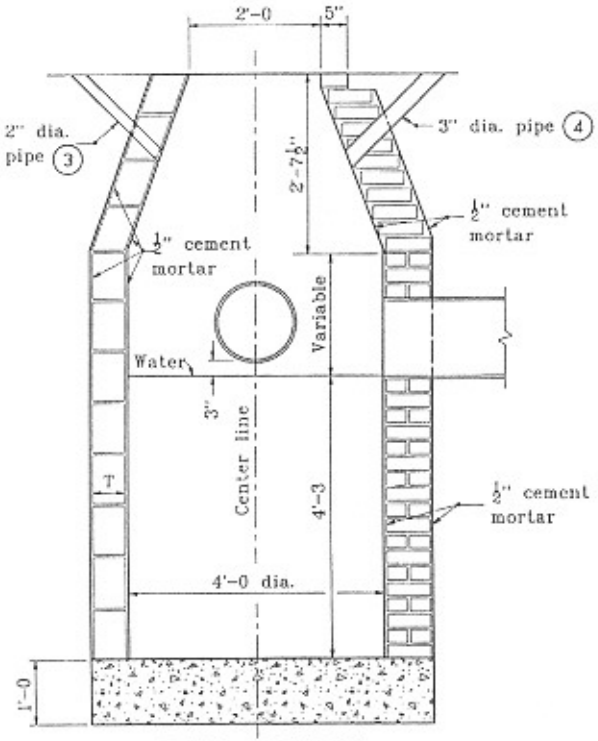

BRICK OR BLOCK

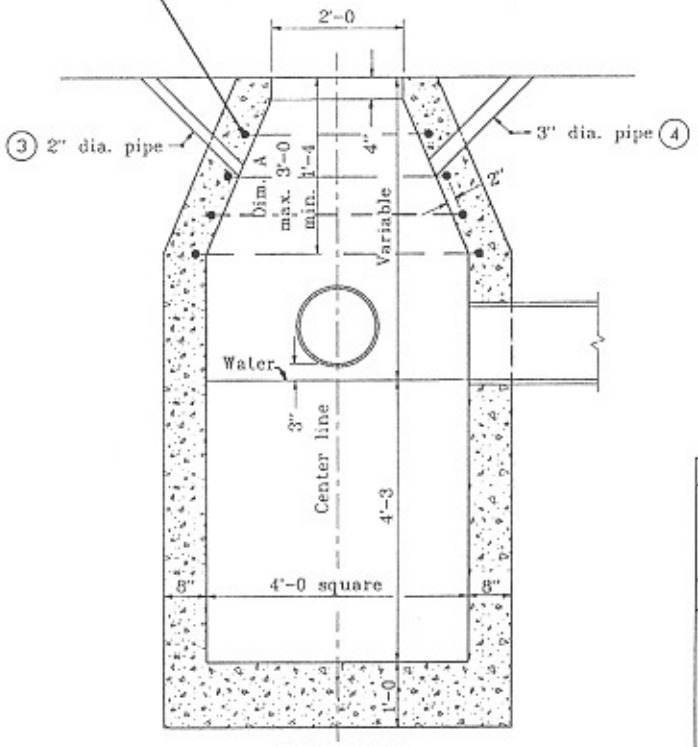

CONCRETE

INDIANA DEPARTMENT OF TRANSPORTATION

CATCH BASIN
TYPE A

SEPTEMBER 1997

STANDARD DRAWING NO. **E 720-CBST-01**

ANTHONY L. URENOVITCH REGISTERED No. 18095 STATE OF INDIANA PROFESSIONAL ENGINEER

DESIGN STANDARDS ENGINEER

DETAILS PLACED IN THIS FORMAT 11-15-99

/s/ Anthony L. Urenovich 11-15-99
DESIGN STANDARDS ENGINEER — DATE

/s/ Firooz Zandi 11-15-99
CHIEF HIGHWAY ENGINEER — DATE

ORIGINALLY APPROVED 9-02-97

GENERAL NOTES

1. These dimensions may be increased or decreased by 1'-0", as directed.
2. See Standard Drawing E 720-INCA-01 for casting type 6 details.

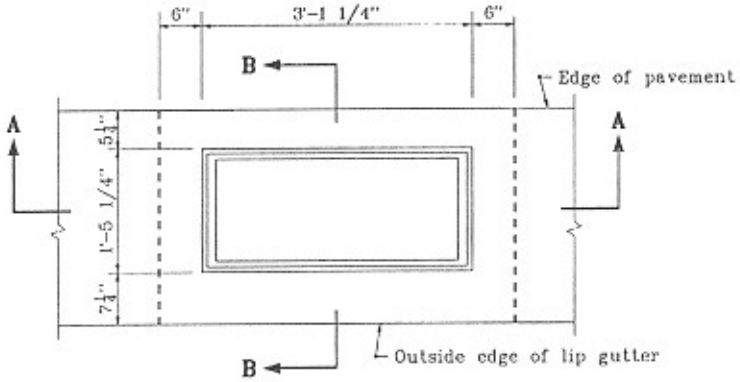

PLAN

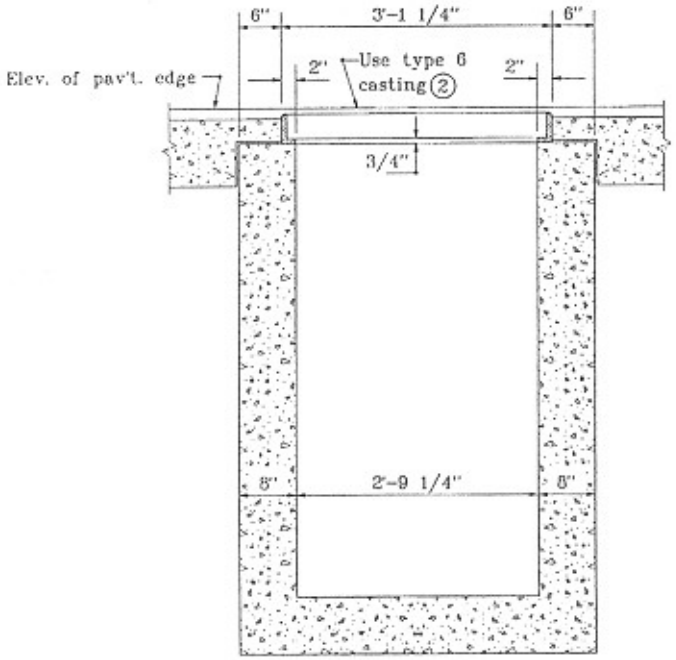

SECTION A-A

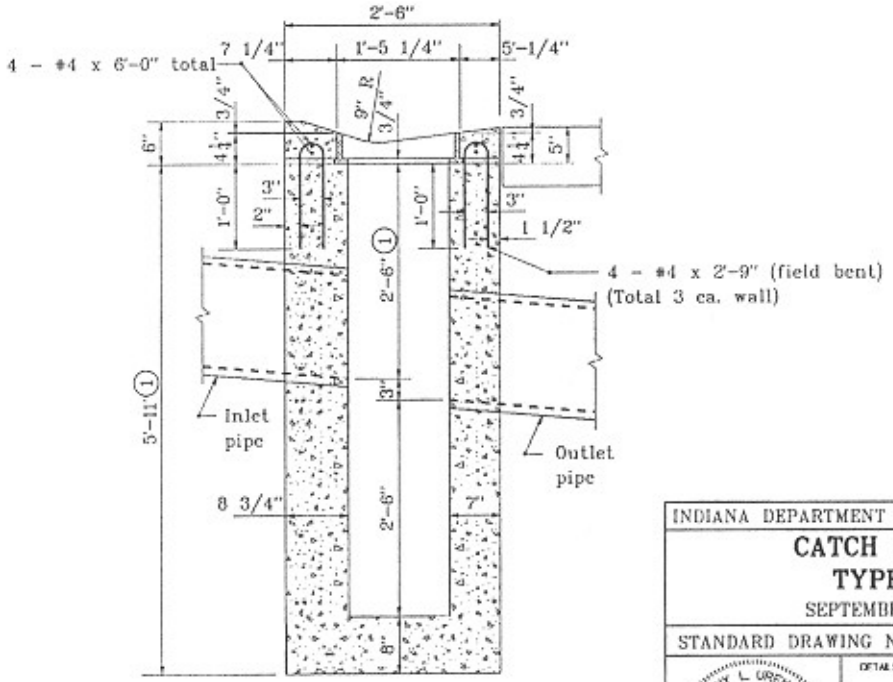

SECTION B-B

INDIANA DEPARTMENT OF TRANSPORTATION

CATCH BASIN
TYPE D

SEPTEMBER 1997

STANDARD DRAWING NO. **E 720-CBST-02**

ANTHONY L. DREMOVICH REGISTERED No. 18095 STATE OF INDIANA PROFESSIONAL ENGINEER

DESIGN STANDARDS ENGINEER

DETAILS PLACED IN THIS FORMAT 11-15-99

/s/ Anthony L. Dremovich 11-15-99
DESIGN STANDARDS ENGINEER — DATE

/s/ Pirooz Zandi 11-15-99
CHIEF HIGHWAY ENGINEER — DATE

ORIGINALLY APPROVED 9-01-97

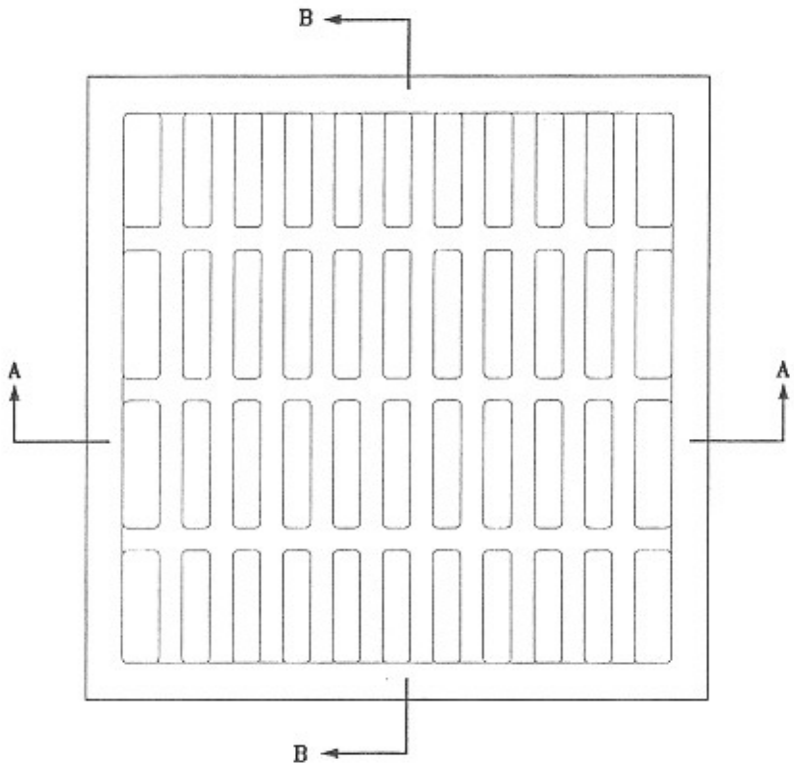

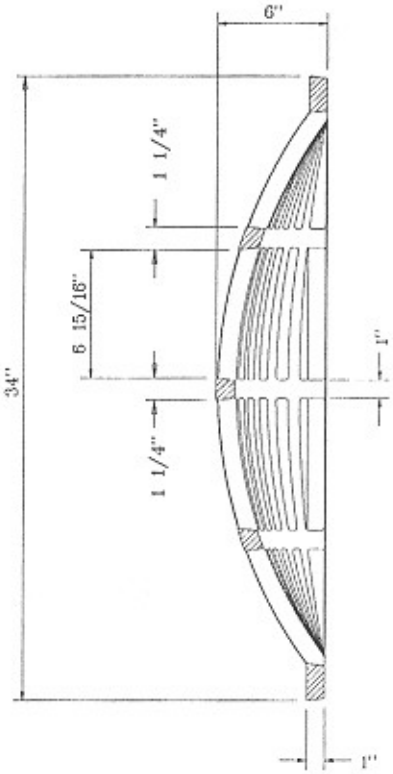

SECTION B–B

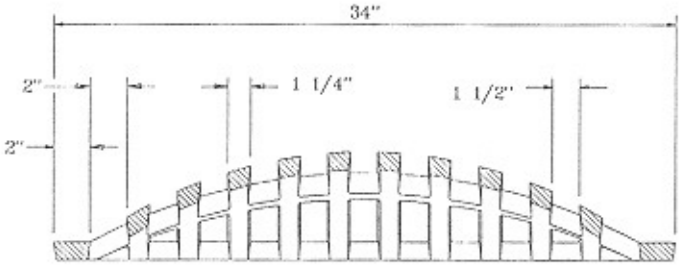

SECTION A–A

EARTH DITCH CASTING TYPE 7

INDIANA DEPARTMENT OF TRANSPORTATION

EARTH DITCH
CASTING TYPE 7
SEPTEMBER 1998

STANDARD DRAWING NO. **E 720–EDCA–01**

ANTHONY L. URENOVICH REGISTERED No. 18095 STATE OF INDIANA PROFESSIONAL ENGINEER

DESIGN STANDARDS ENGINEER

DETAILS PLACED IN THIS FORMAT 11-15-99

/s/ Anthony L. Urenovich 11-15-99
DESIGN STANDARDS ENGINEER DATE

/s/ Firoz Zandi 11-15-99
CHIEF HIGHWAY ENGINEER DATE

ORIGINALLY APPROVED 9-01-98

GENERAL NOTES

1. These dimensions may be increased or decreased by 1'-0", as directed.
2. See Standard Drawing E 720-INCA-01 for casting type 6 details.

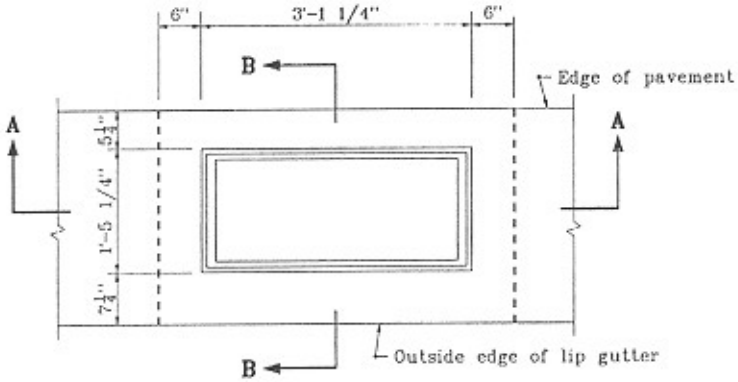

PLAN

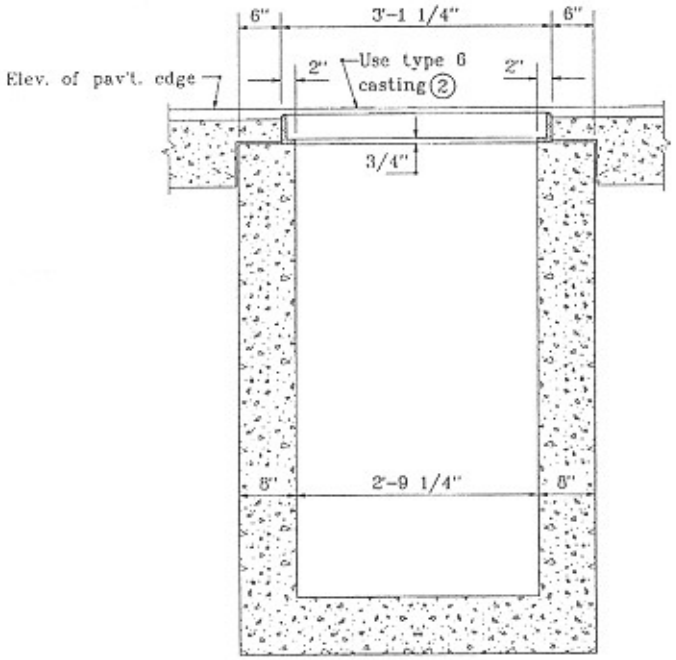

SECTION A-A

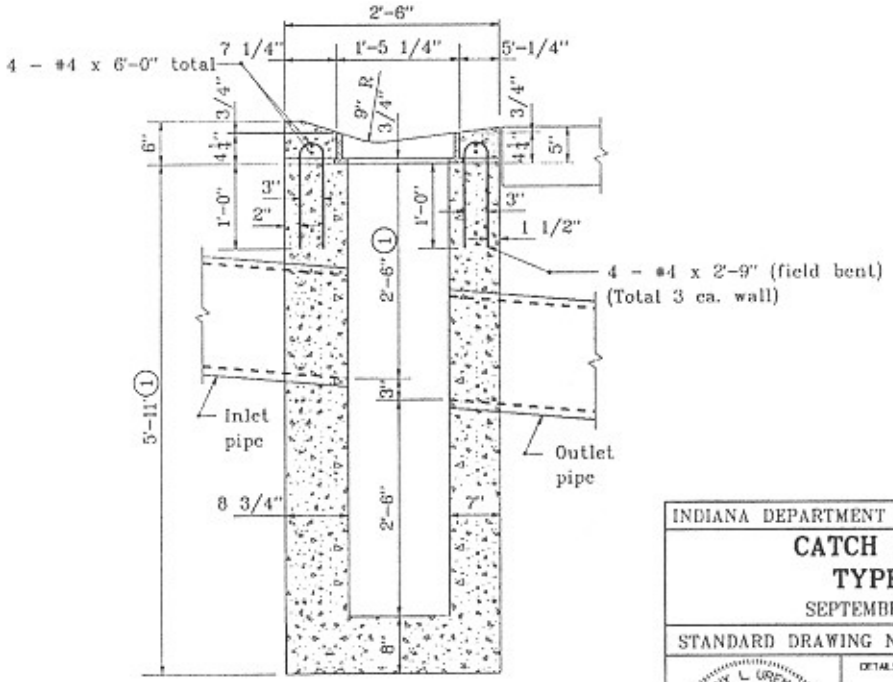

SECTION B-B

INDIANA DEPARTMENT OF TRANSPORTATION	
CATCH BASIN TYPE D SEPTEMBER 1997	
STANDARD DRAWING NO. **E 720-CBST-02**	
ANTHONY L. UREMOVICH REGISTERED No. 18095 STATE OF INDIANA PROFESSIONAL ENGINEER — DESIGN STANDARDS ENGINEER	DETAILS PLACED IN THIS FORMAT 11-15-99
	/s/ Anthony L. Uremovich — DESIGN STANDARDS ENGINEER — DATE 11-15-99
	/s/ Pirooz Zandi — CHIEF HIGHWAY ENGINEER — DATE 11-15-99
	ORIGINALLY APPROVED 9-01-97

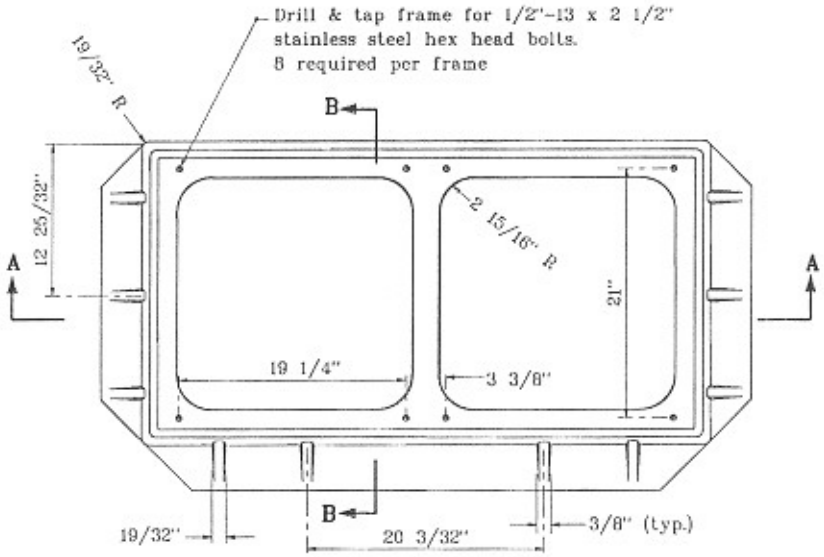

PLAN

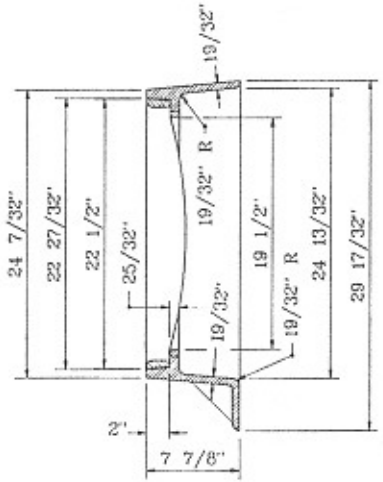

SECTION B–B

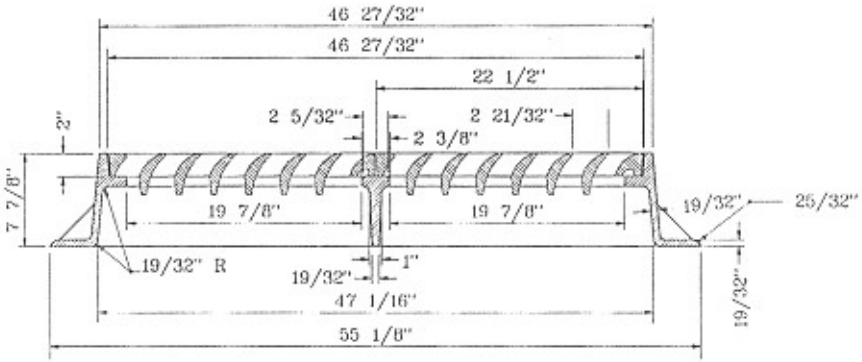

SECTION A–A

FRAME
CASTING TYPE 5

INDIANA DEPARTMENT OF TRANSPORTATION	
CASTING TYPE 5 FRAME SEPTEMBER 2001	
STANDARD DRAWING NO. **E 720-ICCA-01**	
RICHARD L. VanCLEAVE REGISTERED No. 9750 STATE OF INDIANA PROFESSIONAL ENGINEER — DESIGN STANDARDS ENGINEER	/s/ Anthony L. Uremovich — DESIGN STANDARDS ENGINEER — DATE 9-04-01 /s/ Firoos Zandi — CHIEF HIGHWAY ENGINEER — DATE 9-04-01

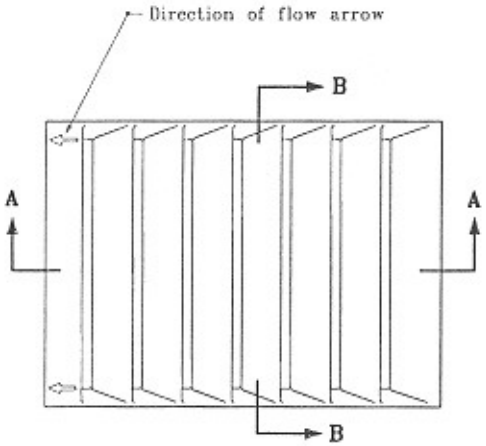

PLAN

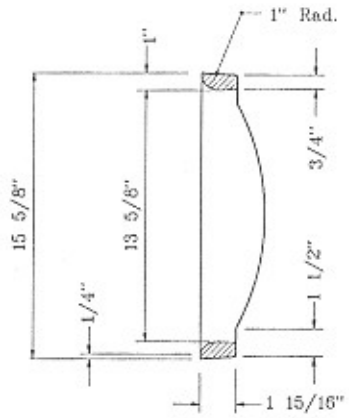

SECTION B-B

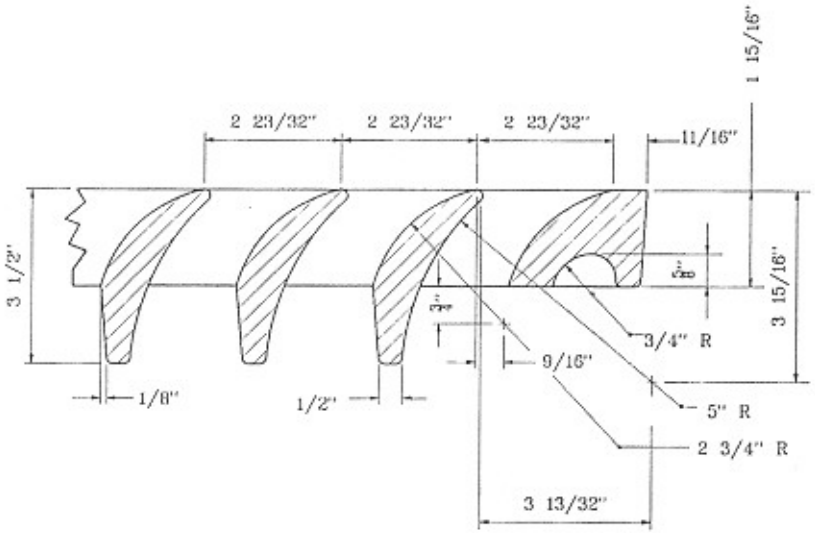

DETAIL OF SECTION A-A
GRATE
CASTING TYPE 8

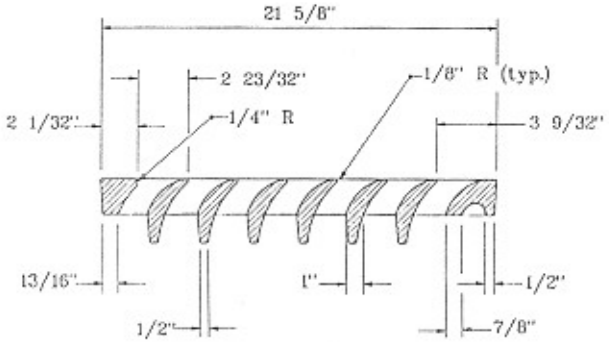

SECTION A-A

INDIANA DEPARTMENT OF TRANSPORTATION

CASTING TYPE 8
GRATE
SEPTEMBER 1998

STANDARD DRAWING NO. E 720-ICCA-05

ANTHONY L. UREMOVICH REGISTERED No. 18095 STATE OF INDIANA PROFESSIONAL ENGINEER

DESIGN STANDARDS ENGINEER

DETAILS PLACED IN THIS FORMAT 11-15-99

/s/ Anthony L. Uremovich 11-15-99
DESIGN STANDARDS ENGINEER DATE

/s/ Firooz Zandi 11-15-99
CHIEF HIGHWAY ENGINEER DATE
ORIGINALLY APPROVED 9-01-98

GENERAL NOTES

1. Curb box adjustable from $5\frac{1}{4}$" to $8\frac{3}{4}$".

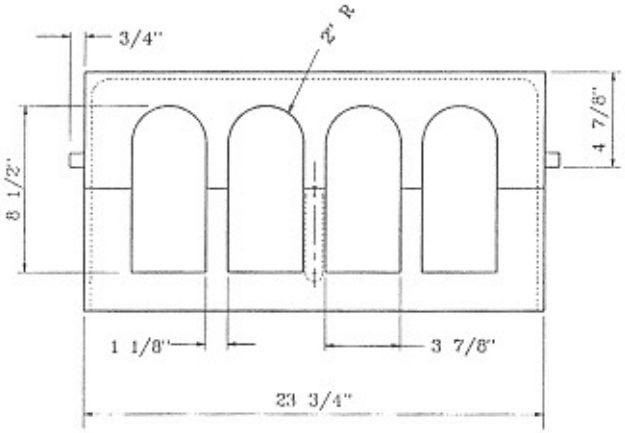

FRONT

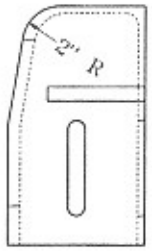

SIDE

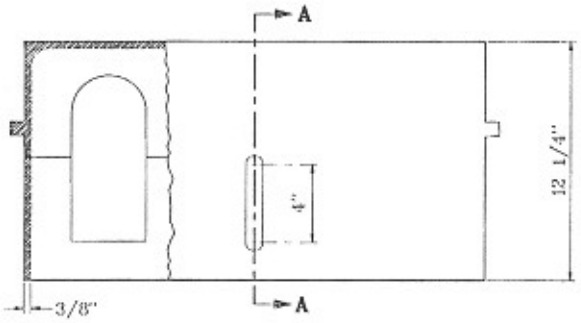

BACK

CURB BOX
CASTING TYPE 8

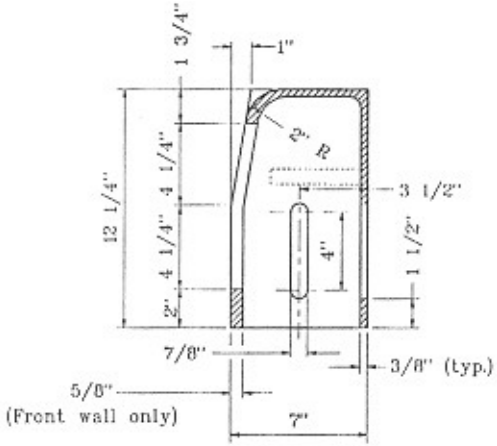

SECTION A-A

INDIANA DEPARTMENT OF TRANSPORTATION

CASTING TYPE 8
CURB BOX

SEPTEMBER 1998

STANDARD DRAWING NO. **E 720-ICCA-06**

ANTHONY L. URENOVICH REGISTERED No. 18095 STATE OF INDIANA PROFESSIONAL ENGINEER

DESIGN STANDARDS ENGINEER

DETAILS PLACED IN THIS FORMAT 11-15-99

/s/ Anthony L. Urenovich 11-15-99
DESIGN STANDARDS ENGINEER — DATE

/s/ Firooz Zandi 11-15-99
CHIEF HIGHWAY ENGINEER — DATE

ORIGINALLY APPROVED 9-01-98

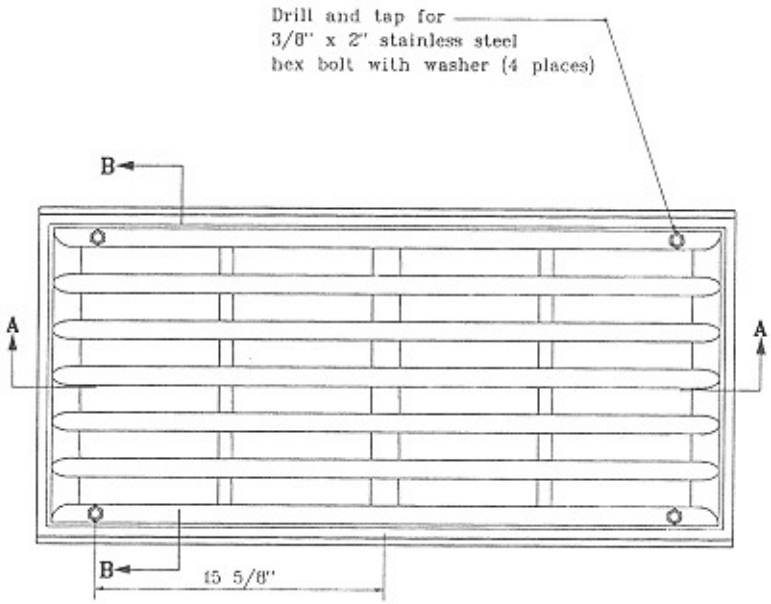

PLAN

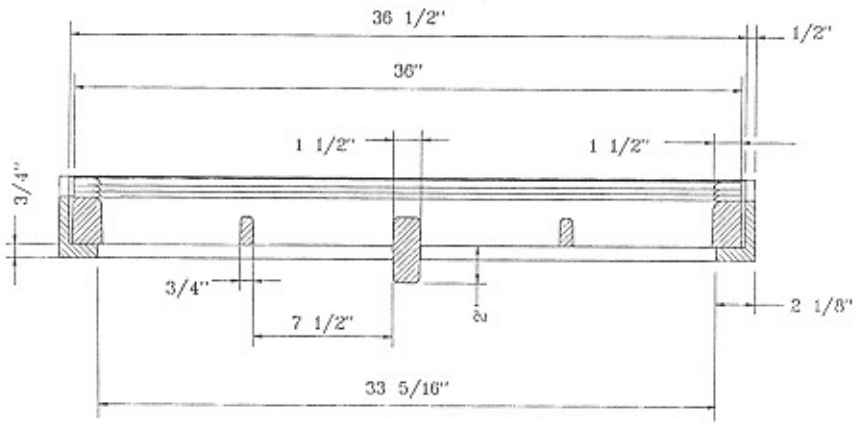

SECTION A–A

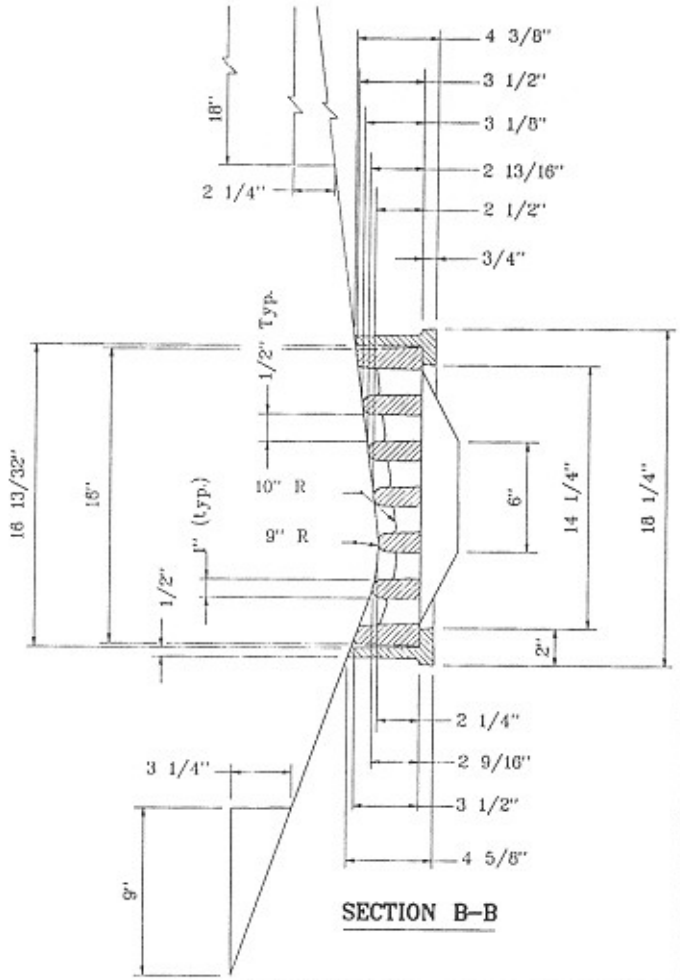

SECTION B–B

INDIANA DEPARTMENT OF TRANSPORTATION

INLET CASTING

TYPE 6

SEPTEMBER 1998

STANDARD DRAWING NO. **E 720-INCA-01**

ANTHONY L. UREMOVICH REGISTERED No. 18095 STATE OF INDIANA PROFESSIONAL ENGINEER

DESIGN STANDARDS ENGINEER

DETAILS PLACED IN THIS FORMAT 11-15-99

/s/ Anthony L. Uremovich 11-15-99
DESIGN STANDARDS ENGINEER DATE

/s/ Firoz Zandi 11-15-99
CHIEF HIGHWAY ENGINEER DATE

ORIGINALLY APPROVED 9-01-98

GENERAL NOTES

1. Curb box adjustable from $5\frac{1}{4}$" to $8\frac{3}{4}$".

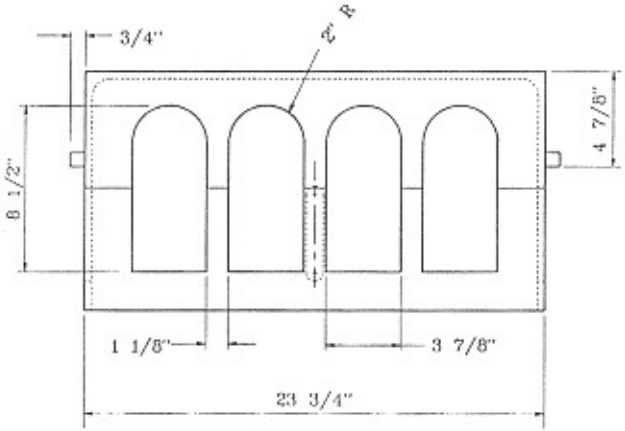

FRONT

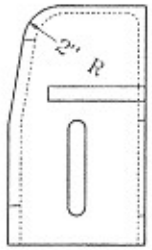

SIDE

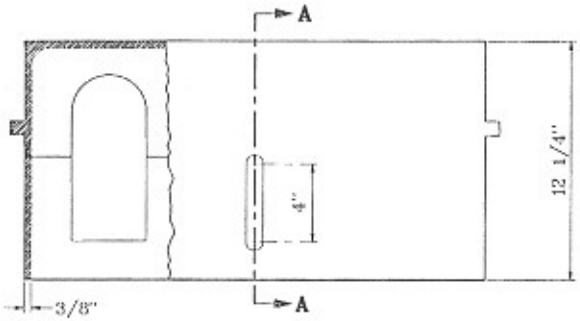

BACK

CURB BOX
CASTING TYPE 8

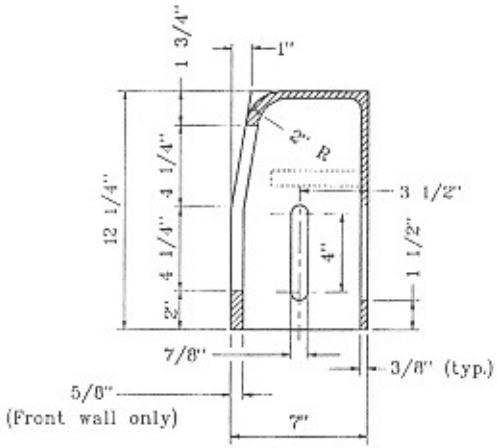

SECTION A-A

INDIANA DEPARTMENT OF TRANSPORTATION

CASTING TYPE 8
CURB BOX

SEPTEMBER 1998

STANDARD DRAWING NO. **E 720-ICCA-06**

ANTHONY L. URENOVICH REGISTERED No. 18095 STATE OF INDIANA PROFESSIONAL ENGINEER

DESIGN STANDARDS ENGINEER

DETAILS PLACED IN THIS FORMAT 11-15-99

/s/ Anthony L. Urenovich 11-15-99
DESIGN STANDARDS ENGINEER DATE

/s/ Firooz Zandi 11-15-99
CHIEF HIGHWAY ENGINEER DATE

ORIGINALLY APPROVED 9-01-98

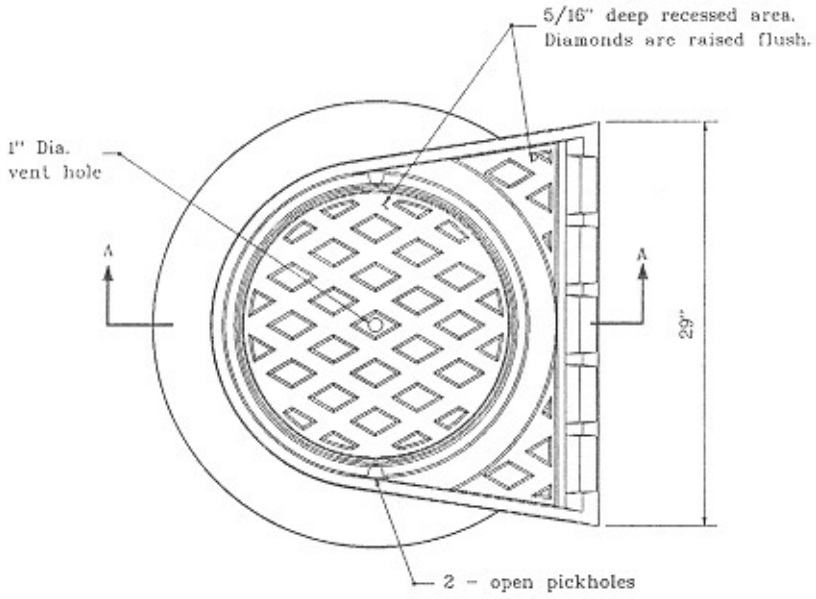

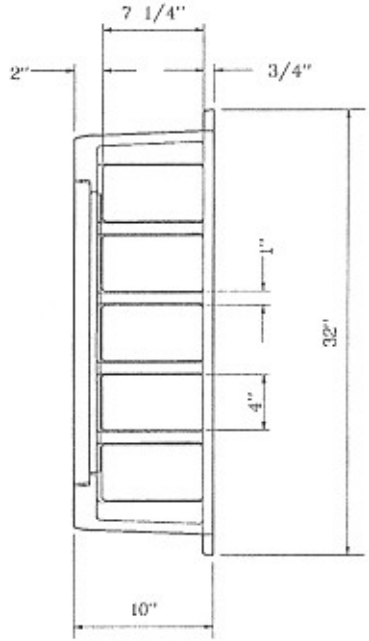

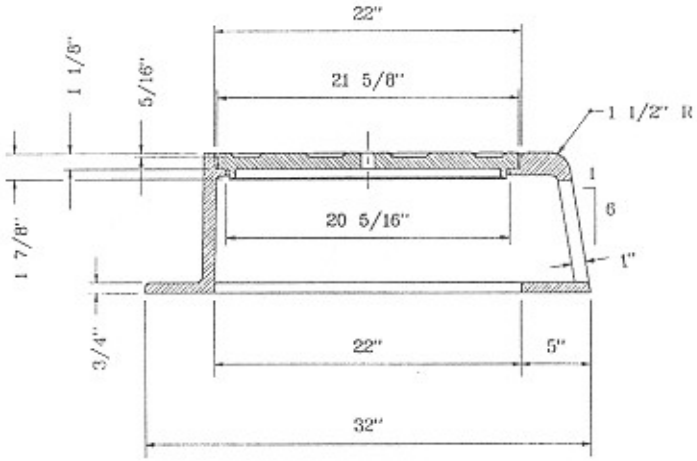

SECTION A-A

CURB CASTING TYPE 3

INDIANA DEPARTMENT OF TRANSPORTATION

CURB INLET CASTING

TYPE 3

SEPTEMBER 1998

STANDARD DRAWING NO. **E 720-INCA-02**

ANTHONY L. URENOVITCH REGISTERED No. 18095 STATE OF INDIANA PROFESSIONAL ENGINEER

DESIGN STANDARDS ENGINEER

DETAILS PLACED IN THIS FORMAT	11-15-99
/s/ Anthony L. Urenovich DESIGN STANDARDS ENGINEER	11-15-99 DATE
/s/ Firooz Zandi CHIEF HIGHWAY ENGINEER	11-15-99 DATE
ORIGINALLY APPROVED	9-01-98

GENERAL NOTES

1. Brick, block, or concrete may be used.

(2) T = 8" for brick structure
T = 6" for segmental block structure

(3) In special cases or where inlet pipe is required, A_1, B_1, A_2, and B_2 shall be increased or decreased 1'-0, as directed.

(4) 2" pipe drain from bottom of curb to inlet. Aggregate to be placed around inlet end of pipe.

(5) 3". dia. pipe to be kept open for drainage of subgrade or base until surface is placed.

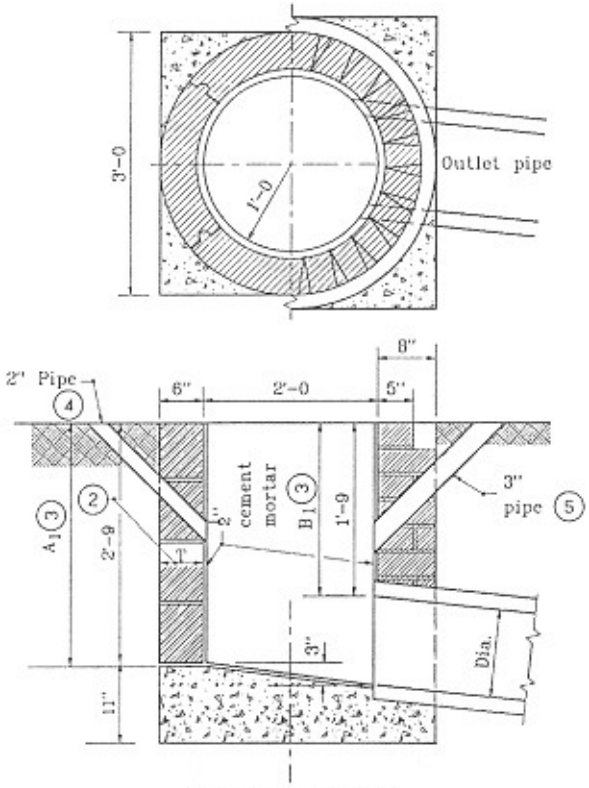

BRICK OR BLOCK

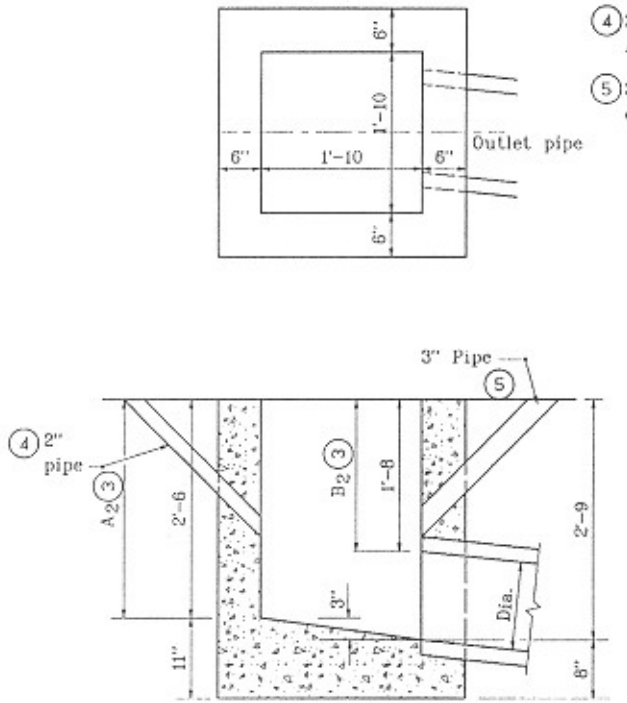

CONCRETE

INDIANA DEPARTMENT OF TRANSPORTATION

INLET TYPE A

APRIL 1995

STANDARD DRAWING NO. E 720-INST-01

ANTHONY L. UREMOVICH REGISTERED No. 18095 STATE OF INDIANA PROFESSIONAL ENGINEER

DESIGN STANDARDS ENGINEER

DETAILS PLACED IN THIS FORMAT 11-15-99

/s/ Anthony L. Uremovich 11-15-99
DESIGN STANDARDS ENGINEER DATE

/s/ Firoz Zandi 11-15-99
CHIEF HIGHWAY ENGINEER DATE
ORIGINALLY APPROVED 4-03-95

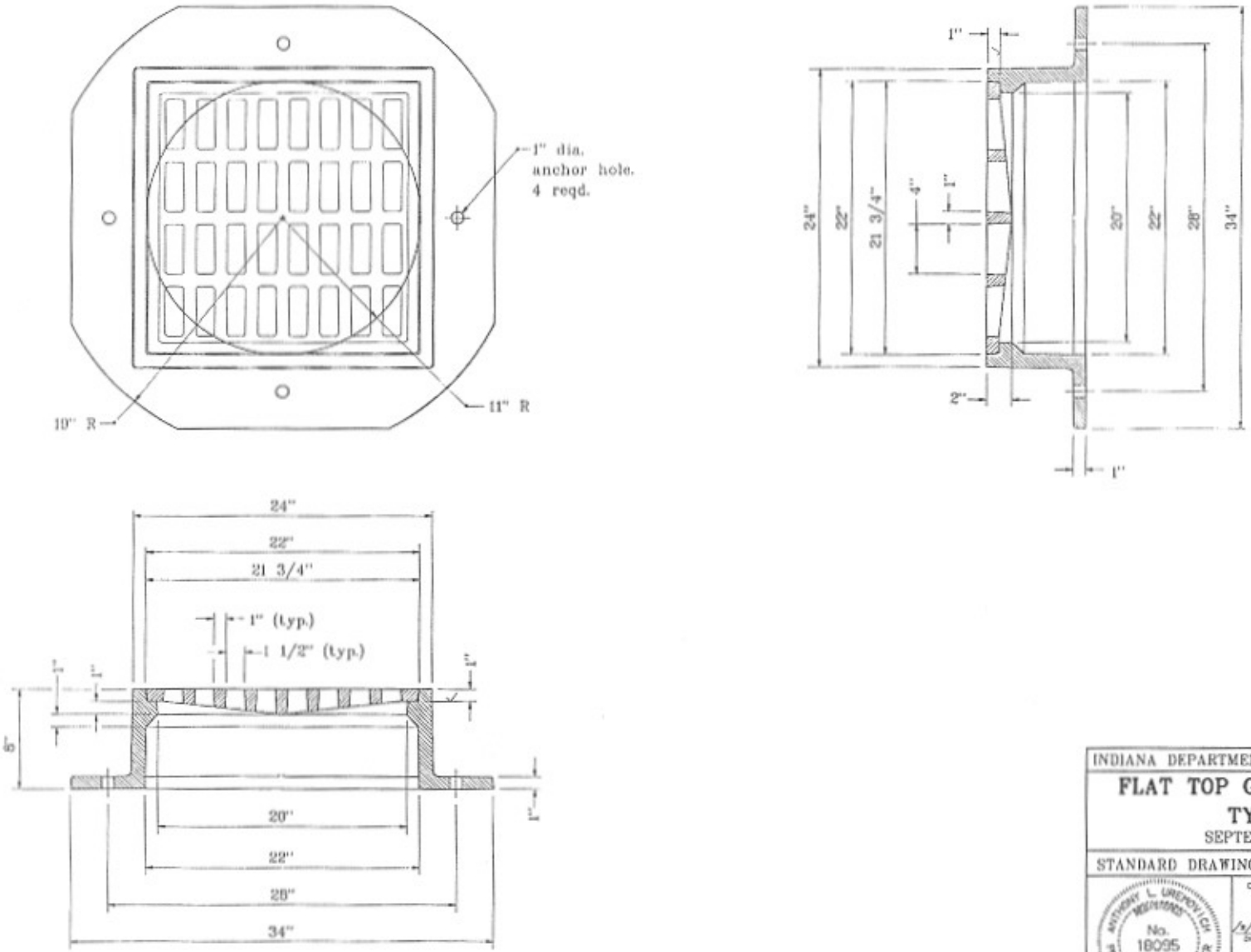

INDIANA DEPARTMENT OF TRANSPORTATION

FLAT TOP GRATE CASTING
TYPE 2

SEPTEMBER 1998

STANDARD DRAWING NO. **E 720-MHCA-01**

ANTHONY L. UREMOVICH
REGISTERED
No. 18095
STATE OF INDIANA
PROFESSIONAL ENGINEER

DESIGN STANDARDS ENGINEER

DETAILS PLACED IN THIS FORMAT 11-15-99

/s/ Anthony L. Uremovich 11-15-99
DESIGN STANDARDS ENGINEER DATE

/s/ Firoze Zandi 11-15-99
CHIEF HIGHWAY ENGINEER DATE

ORIGINALLY APPROVED 9-01-98

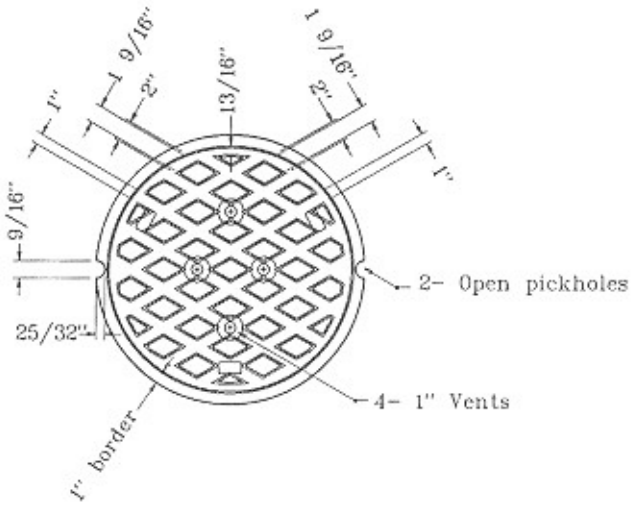

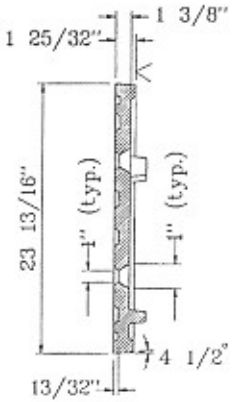

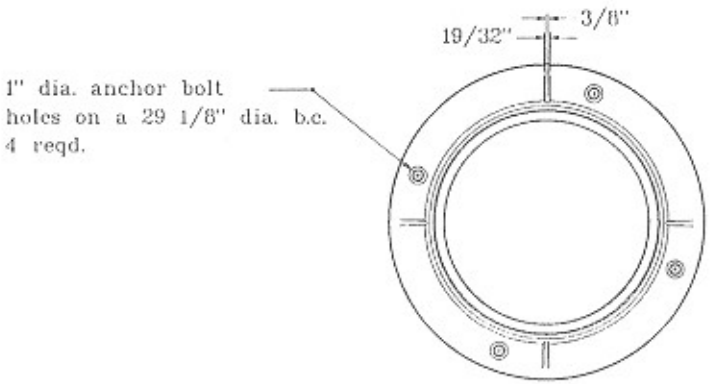

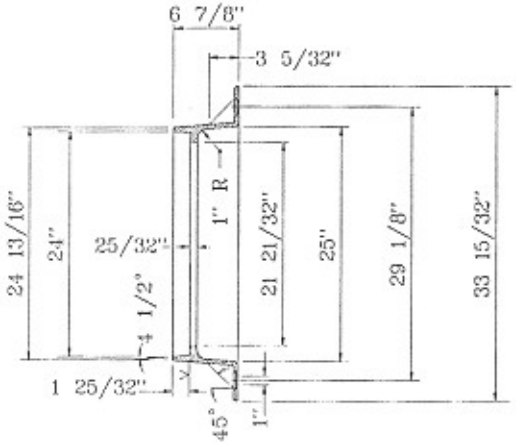

INDIANA DEPARTMENT OF TRANSPORTATION

MANHOLE CASTING

TYPE 4 RING AND COVER

SEPTEMBER 1998

STANDARD DRAWING NO **E 720-MHCA-02**

ANTHONY L. UREMOVICH REGISTERED No. 18095 STATE OF INDIANA PROFESSIONAL ENGINEER

DESIGN STANDARDS ENGINEER

DETAILS PLACED IN THIS FORMAT 11-15-99

/s/ Anthony L. Uremovich 11-15-99
DESIGN STANDARDS ENGINEER DATE

/s/ Fionne Zands 11-15-99
CHIEF HIGHWAY ENGINEER DATE

ORIGINALLY APPROVED 9-01-98

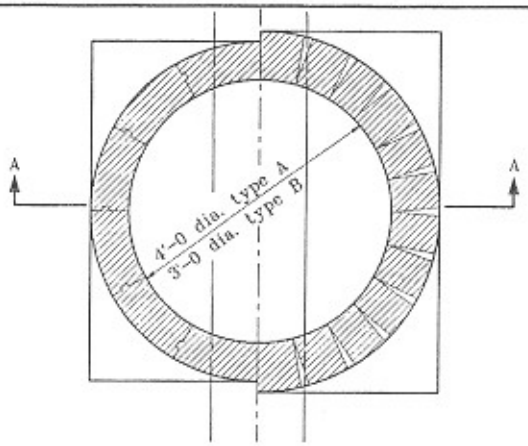

SECTION B-B

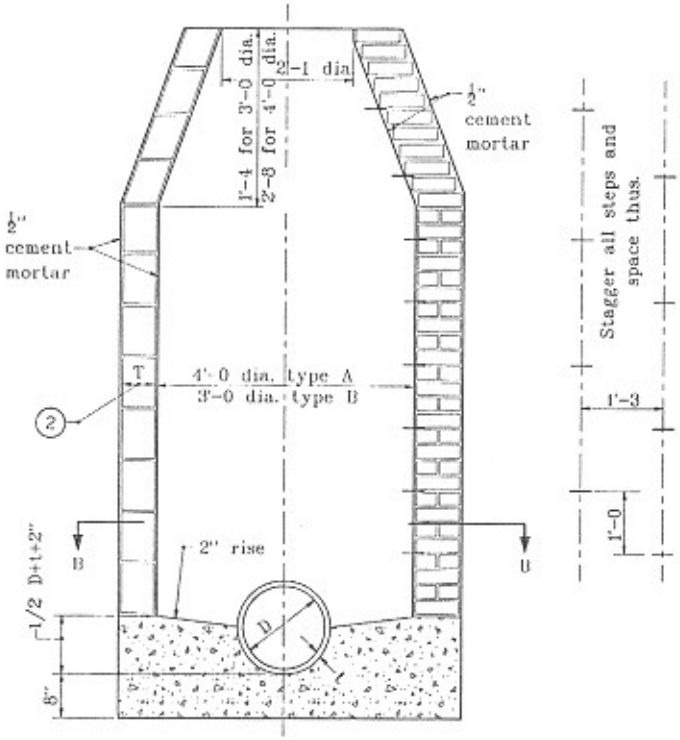

SECTION A-A

TYPE A
Dia. = 4'-0"

TYPE B
Dia. = 3'-0

GENERAL NOTES

1. Precast manhole type C maybe substituted for manhole type A or B.

(2) T = 8" for brick structure
T = 6" for segmental block structure

INDIANA DEPARTMENT OF TRANSPORTATION

MANHOLES TYPE A AND B

APRIL 1995

STANDARD DRAWING NO. E 720-MHST-01

ANTHONY L. UREMOVICH REGISTERED No. 18095 STATE OF INDIANA PROFESSIONAL ENGINEER

DESIGN STANDARDS ENGINEER

DETAILS PLACED IN THIS FORMAT 11-15-99

/s/ Anthony L. Uremovich 11-15-99
DESIGN STANDARDS ENGINEER DATE

/s/ Firoz Zandi 11-15-99
CHIEF HIGHWAY ENGINEER DATE

ORIGINALLY APPROVED 4-03-95