GENERAL NOTES

1. Longitudinal safety bar shall be welded to transverse bars. For cross structure and section, if S (2'-6, no longitudinal safety bar is required. If S) 2'-6, longitudinal safety bar(s) shall be provided so S_1 (2'-6.

2. Bolts shall be oriented with threads to inside of end section.

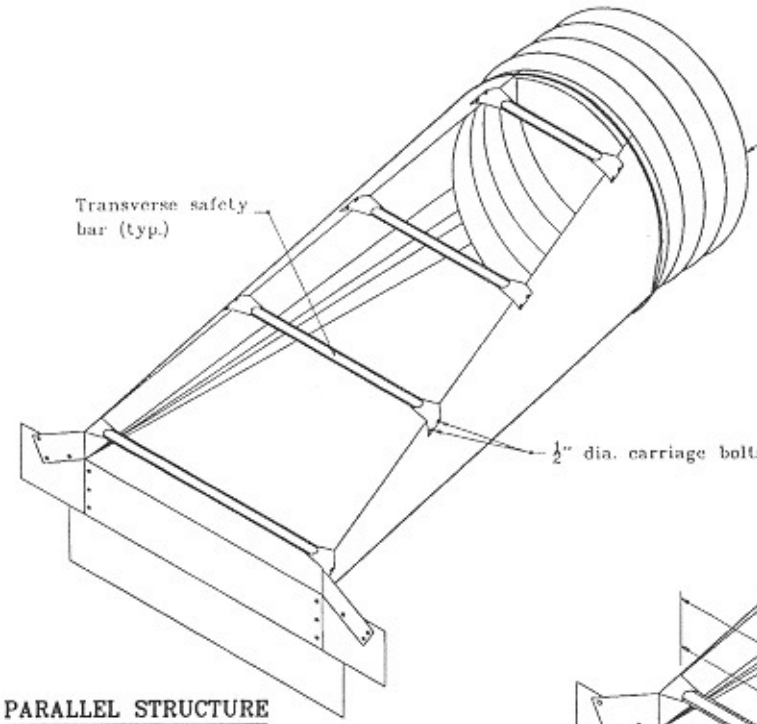

PARALLEL STRUCTURE END SECTION

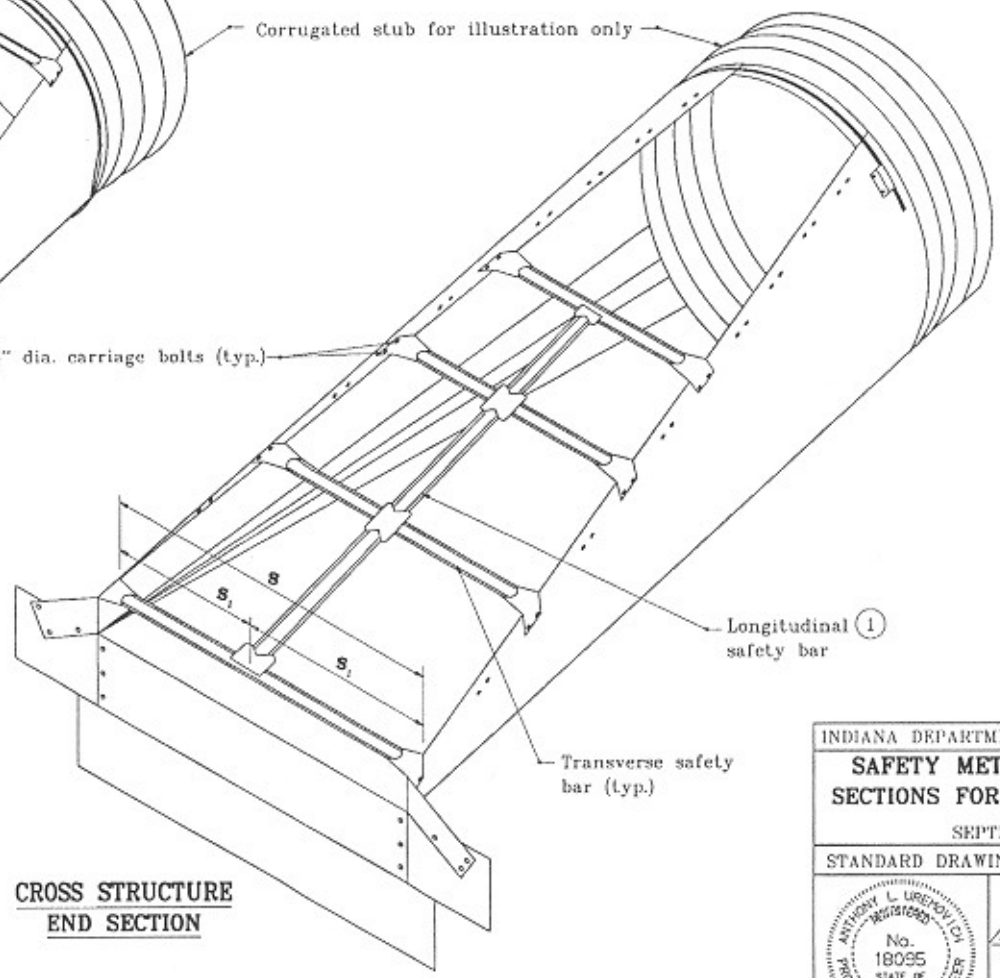

CROSS STRUCTURE END SECTION

LEGEND

s - Overall span

s_1 - Span between end section edge and longitudinal safety bar or between longitudinal safety bars.

$$s_1 = \frac{s}{n + 1}$$

where n = Number of longitudinal safety bars

INDIANA DEPARTMENT OF TRANSPORTATION

SAFETY METAL CULVERT END SECTIONS FOR CORRUGATED PIPE

SEPTEMBER 2000

STANDARD DRAWING NO. **E 715-SMES-01**

ANTHONY L. UREMOVICH REGISTERED No. 18095 STATE OF INDIANA PROFESSIONAL ENGINEER

DESIGN STANDARDS ENGINEER

/s/ Anthony L. Uremovich 9-01-00
DESIGN STANDARDS ENGINEER — DATE

/s/ Firoos Zandi 9-01-00
CHIEF HIGHWAY ENGINEER — DATE

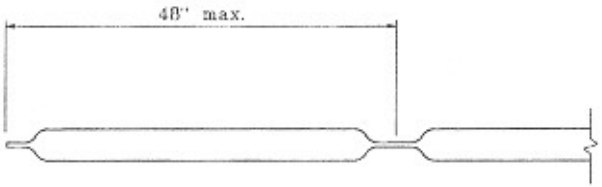

LONGITUDINAL SAFETY BAR DETAIL

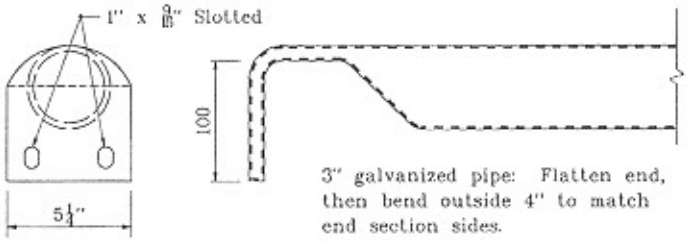

OR

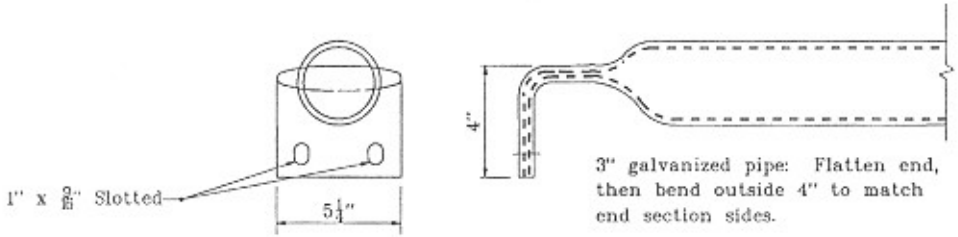

TRANSVERSE SAFETY BAR DETAILS

INDIANA DEPARTMENT OF TRANSPORTATION

SAFETY METAL CULVERT END SECTIONS FOR CORRUGATED PIPE

JANUARY 1998

STANDARD DRAWING NO. **E 715-SMES-02**

ANTHONY L. URENOVICH REGISTERED No. 18095 STATE OF INDIANA PROFESSIONAL ENGINEER

DESIGN STANDARDS ENGINEER

DETAILS PLACED IN THIS FORMAT 7-27-99

/s/ Anthony L. Urenovich 7-27-99
DESIGN STANDARDS ENGINEER DATE

/s/ Firoos Zandi 7-27-99
CHIEF HIGHWAY ENGINEER DATE

ORIGINALLY APPROVED 1-02-98

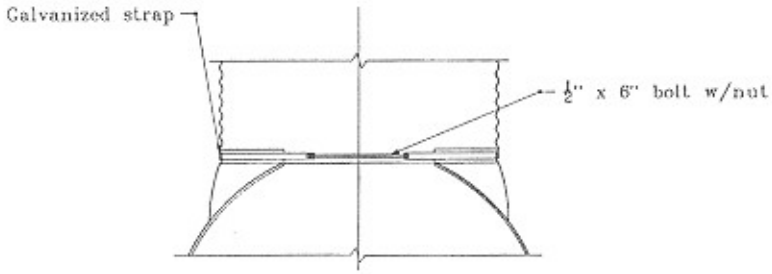

TYPE 1 CONNECTOR DETAIL

Through 24" dia.

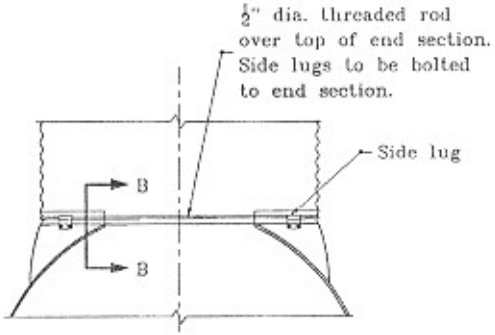

TYPE 2 CONNECTOR DETAIL

For all circular pipes larger than 24" and all pipe-arches

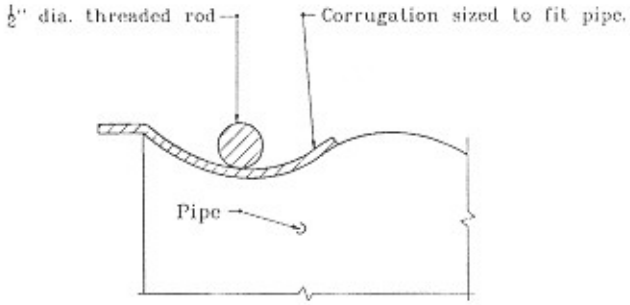

SECTION B-B

GENERAL NOTES

1. For circular pipe diameters through 24", attach end section to pipe with type 1 connector. For all other sizes, attach end section to pipe with type 2 connector.

INDIANA DEPARTMENT OF TRANSPORTATION

SAFETY METAL CULVERT END SECTIONS FOR CORRUGATED PIPE

JANUARY 1998

STANDARD DRAWING NO. **E 715-SMES-03**

ANTHONY L. DREMOVICH REGISTERED No. 18095 STATE OF INDIANA PROFESSIONAL ENGINEER

DESIGN STANDARDS ENGINEER

DETAILS PLACED IN THIS FORMAT 7-27-99

/s/ Anthony L. Dremovich 7-27-99
DESIGN STANDARDS ENGINEER DATE

/s/ Firoz Zaidi 7-27-99
CHIEF HIGHWAY ENGINEER DATE

ORIGINALLY APPROVED 1-02-98

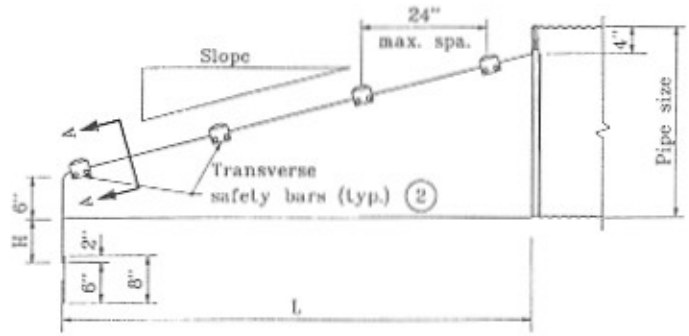

SIDE ELEVATION OF PARALLEL STRUCTURE END SECTION

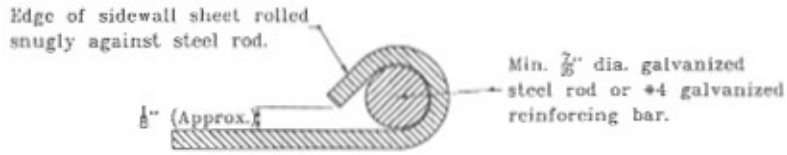

SECTION A-A

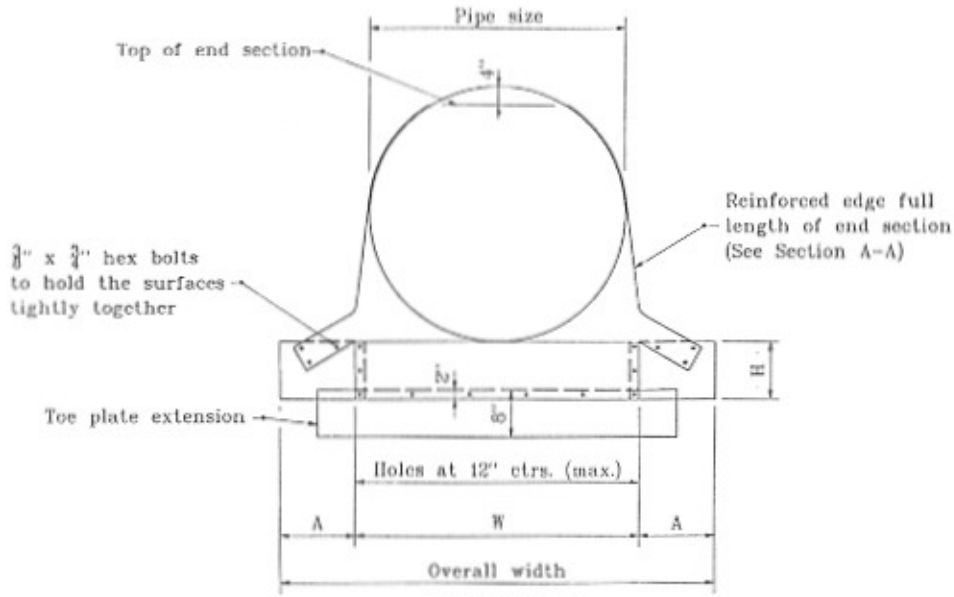

FRONT VIEW

GENERAL NOTES

1. See Standard Drawing E 715-SMES-06 for variable dimensions.
2. Transverse safety bars shall be schedule 40 galvanized steel pipe. Pipe shall be galvanized after forming. Number of bars required will vary depending on the length of the end sections.
3. The toe plate extension shall be the same thickness as the end section. The dimension shall be the end section overall width less 6".

INDIANA DEPARTMENT OF TRANSPORTATION

SAFETY METAL CULVERT END SECTIONS FOR CORRUGATED PIPE

JANUARY 1990

STANDARD DRAWING NO. **E 715-SMES-04**

ANTHONY L. DREMOVICH REGISTERED No. 18095 STATE OF INDIANA PROFESSIONAL ENGINEER

DESIGN STANDARDS ENGINEER

DETAILS PLACED IN SMS FORMAT 7-27-99

/s/ Anthony L. Dremovich 7-27-99
DESIGN STANDARDS ENGINEER DATE

/s/ Firouz Zandi 7-27-99
CHIEF HIGHWAY ENGINEER DATE

ORIGINALLY APPROVED 1-02-98

GENERAL NOTES

1. Toe plate extension shall be the same thickness as the end section. Dimension shall be overall width less 6".
2. Transverse safety bars shall be Schedule 40 galvanized steel pipe. Pipe shall be galvanized after forming. Number of bars required will vary depending on the length of the end sections.
3. Slotted holes for safety bar attachment shall be provided for all end sections.
4. See Standard Drawing E 715-SMES-04 for Section A-A.
5. See Standard Drawing E 715-SMES-06 for variable dimensions.
6. See Standard Drawing E 715-SMES-01 for warrant of longitudinal saftey bar.

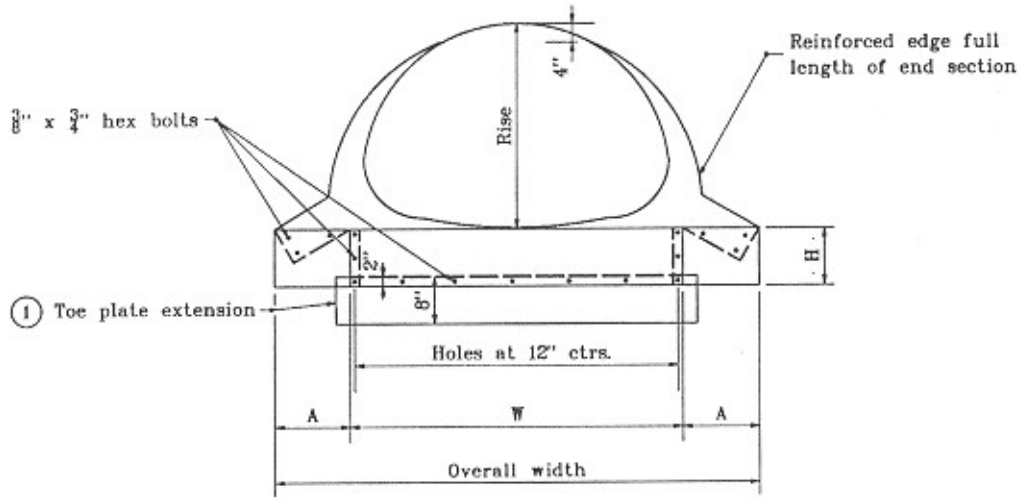

FRONT VIEW

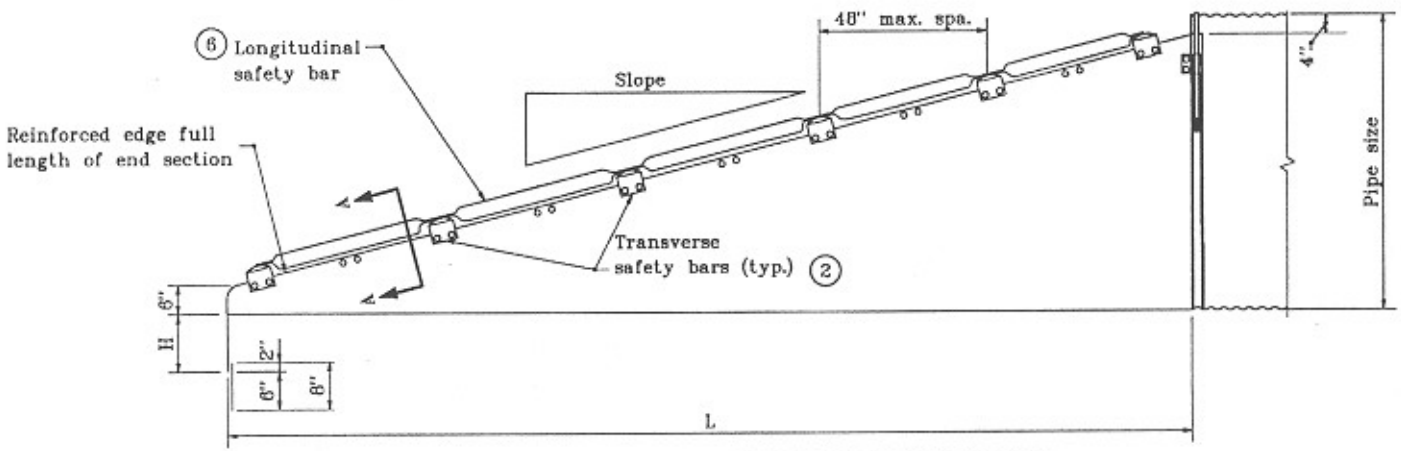

SIDE ELEVATION FOR CROSS STRUCTURE END SECTION

INDIANA DEPARTMENT OF TRANSPORTATION

SAFETY METAL CULVERT END SECTIONS FOR CORRUGATED PIPE

JANUARY 1998

STANDARD DRAWING NO. E 715-SMES-05

ANTHONY L. URENOVICH REGISTERED No. 18095 STATE OF INDIANA PROFESSIONAL ENGINEER

DESIGN STANDARDS ENGINEER

DETAILS PLACED IN THIS FORMAT 7-27-98

/s/ Anthony L. Urenovich 7-27-99
DESIGN STANDARDS ENGINEER DATE

/s/ Firoos Zandi 7-27-99
CHIEF HIGHWAY ENGINEER DATE

ORIGINALLY APPROVED 1-02-98

METAL END SECTIONS FOR CIRCULAR PIPES									
Pipe Dia.	Min. Thick.	Dimensions, in.				L Dimensions			
		A	H	W	Overall Width	Slope	Length (in.)	Slope	Length (in.)
15	.064	8	6	37	37	4:1	20	6:1	30
18	.064	8	6	40	40	4:1	32	6:1	48
21	.064	8	6	43	43	4:1	44	6:1	66
24	.064	8	6	46	46	4:1	56	6:1	84
30	.109	12	9	60	60	4:1	80	6:1	120
36	.109	12	9	66	66	4:1	104	6:1	156
42	.109	16	12	80	80	4:1	128	6:1	192
48	.109	16	12	86	86	4:1	152	6:1	228
54	.109	16	12	92	92	4:1	176	6:1	264
60	.109	16	12	66	98	4:1	200	6:1	300

SAFETY METAL END SECTIONS FOR PIPE-ARCHES											
Equiv. Dia. (in.)	(inches)		Min. Thick.	Dimensions, in.				L Dimensions			
	Span	Rise	in.	A	H	W	Overall Width	Slope	Length (in.)	Slope	Length (in.)
18	21	15	.064	8	6	27	43	4:1	20	6:1	30
21	24	18	.064	8	6	30	46	4:1	32	6:1	48
24	28	20	.064	8	6	34	50	4:1	40	6:1	60
30	35	24	.079	12	9	41	65	4:1	56	6:1	84
36	42	29	.109	12	9	48	72	4:1	76	6:1	114
42	49	33	.109	16	12	55	87	4:1	92	6:1	138
48	57	38	.109	16	12	63	95	4:1	112	6:1	168
54	64	43	.109	16	12	70	102	4:1	132	6:1	198
60	71	47	.109	16	12	77	109	4:1	148	6:1	222
72	83	57	.109	16	12	89	121	4:1	188	6:1	282

INDIANA DEPARTMENT OF TRANSPORTATION

SAFETY METAL CULVERT END SECTIONS FOR CORRUGATED PIPE

JANUARY 1998

STANDARD DRAWING NO. **E 715-SMES-06**

ANTHONY L. UREMOVICH REGISTERED No. 18095 STATE OF INDIANA PROFESSIONAL ENGINEER

DESIGN STANDARDS ENGINEER

DETAILS PLACED IN THIS FORMAT 11-15-99

/s/ Anthony L. Uremovich 11-15-99
DESIGN STANDARDS ENGINEER — DATE

/s/ Firooz Zandi 11-15-99
CHIEF HIGHWAY ENGINEER — DATE

ORIGINALLY APPROVED 1-02-98

GENERAL NOTES

(1) Longitudinal safety bar shall be welded to transverse bars. For cross structure and section, if S (2'-6, no longitudinal safety bar is required. If S) 2'-6, longitudinal safety bar(s) shall be provided so S_1 (2'-6.

2. Bolts shall be oriented with threads to inside of end section.

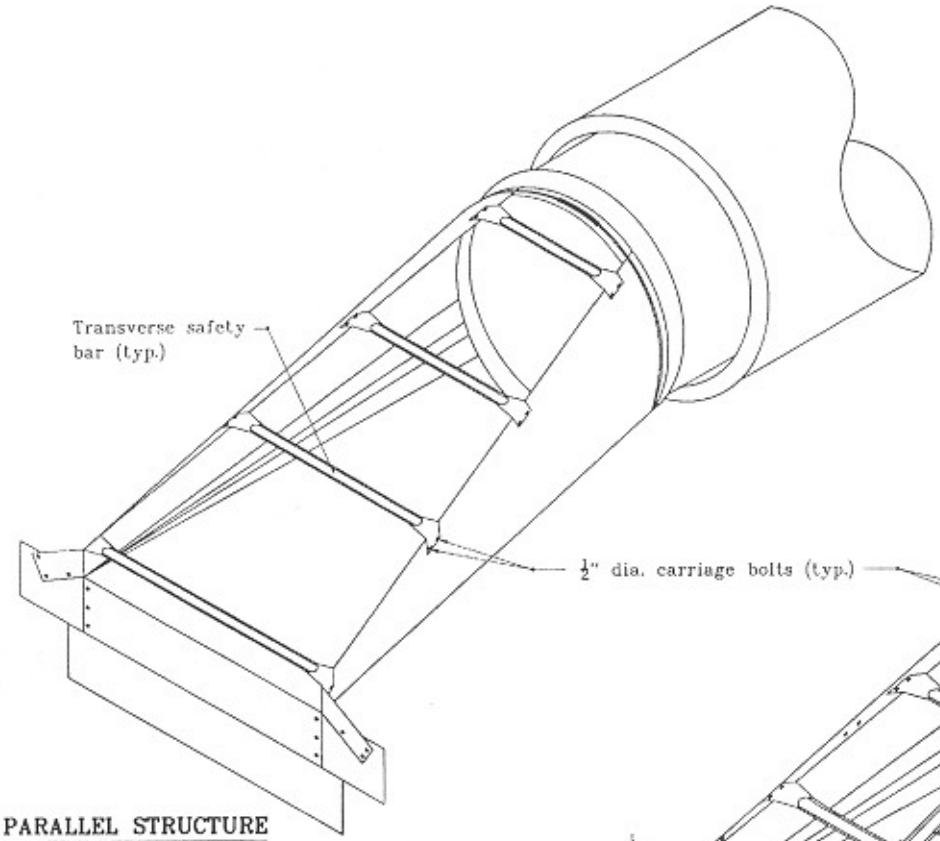

PARALLEL STRUCTURE END SECTION

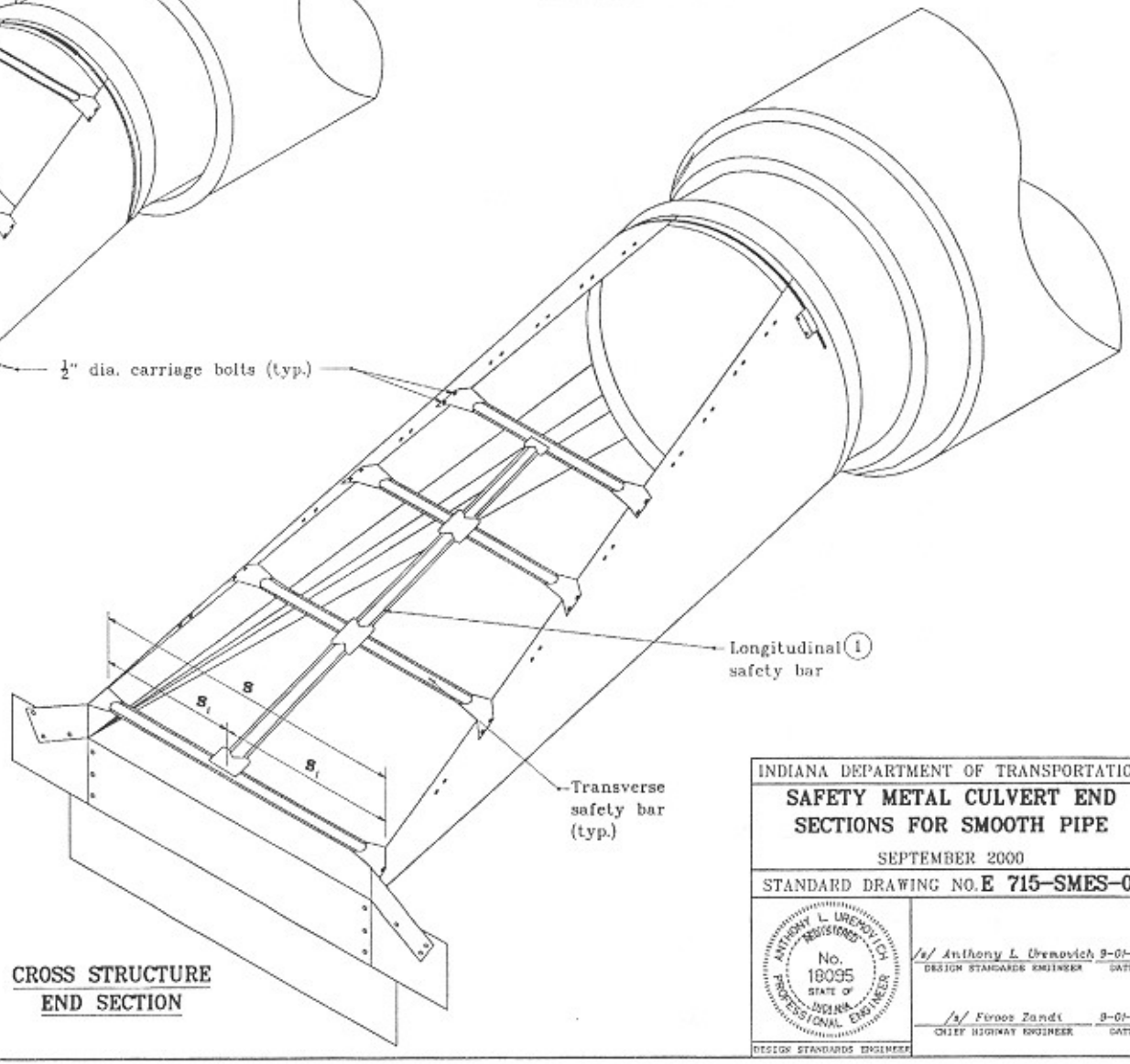

CROSS STRUCTURE END SECTION

LEGEND

s - Overall span

$_1$ Span between end section edge and longitudinal safety bar or between longitudinal safety bars.

$$s_1 = \frac{s}{n + 1}$$

where n = Number of longitudinal safety bars

INDIANA DEPARTMENT OF TRANSPORTATION

SAFETY METAL CULVERT END SECTIONS FOR SMOOTH PIPE

SEPTEMBER 2000

STANDARD DRAWING NO. **E 715-SMES-07**

ANTHONY L. UREMOVICH REGISTERED No. 18095 STATE OF INDIANA PROFESSIONAL ENGINEER

DESIGN STANDARDS ENGINEER

/s/ Anthony L. Uremovich 9-01-00
DESIGN STANDARDS ENGINEER — DATE

/s/ Firoos Zandi 9-01-00
CHIEF HIGHWAY ENGINEER — DATE

GENERAL NOTES

1. For circular pipe diameters through 24", attach end section to pipe with type 1 connector. For all other sizes, attach end section to pipe with type 2 connector.

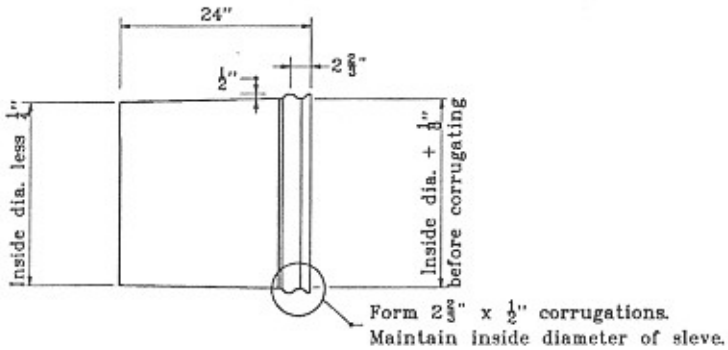

SMOOTH TAPERED SLEEVE DETAIL

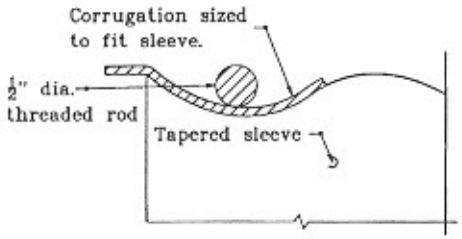

SECTION B–B

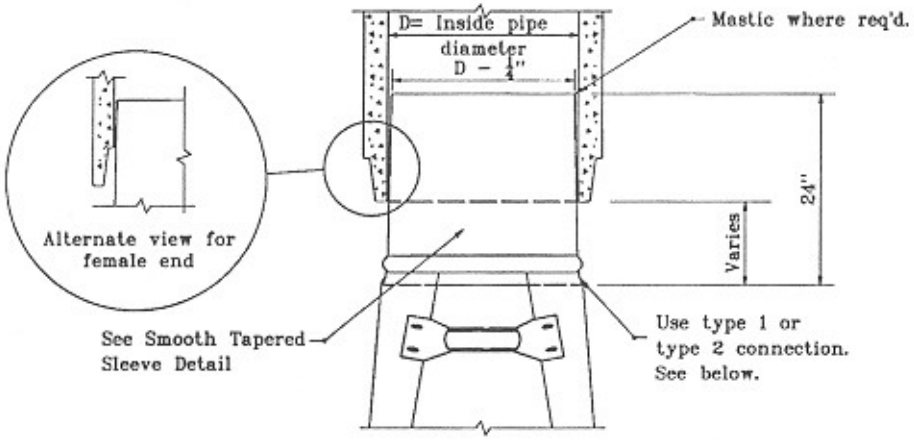

TAPERED SLEEVE FOR ATTACHING
STEEL END SECTION TO SMOOTH INTERIOR PIPE

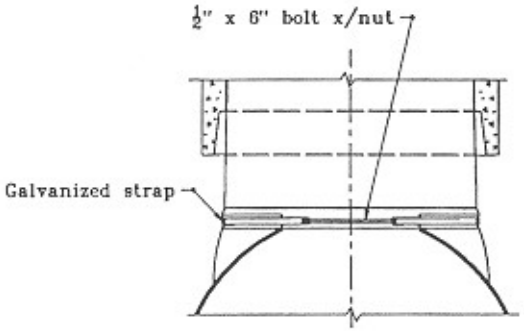

TYPE 1 CONNECTOR DETAIL
for all circular pipes through 24"

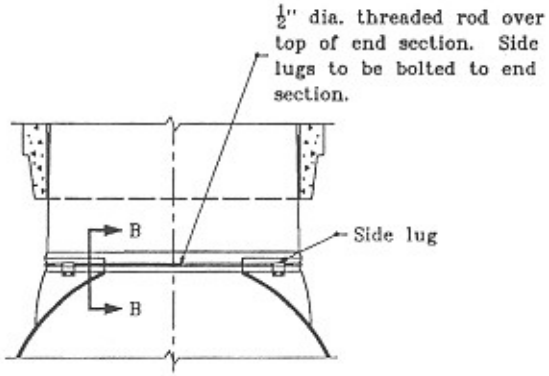

TYPE 2 CONNECTOR DETAIL
all circular pipes larger than 24"
and all horizontal elliptical pipes

INDIANA DEPARTMENT OF TRANSPORTATION

SAFETY METAL CULVERT END SECTIONS FOR SMOOTH PIPE

JANUARY 1998

STANDARD DRAWING NO. E 715-SMES-08

ANTHONY L. UREMOVICH REGISTERED No. 18095 STATE OF INDIANA PROFESSIONAL ENGINEER

DESIGN STANDARDS ENGINEER

DETAILS PLACED IN THIS FORMAT 7-27-99

/s/ Anthony L. Uremovich 7-27-99
DESIGN STANDARDS ENGINEER DATE

/s/ Firooz Zandi 7-27-99
CHIEF HIGHWAY ENGINEER DATE

ORIGINALLY APPROVED 1-02-98

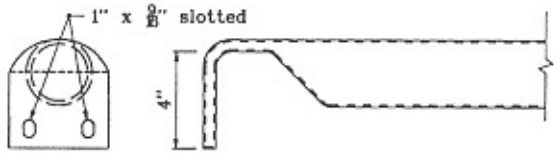

3" galvanized pipe: Flatten end, then bend outside 4" to match end section sides.

OR

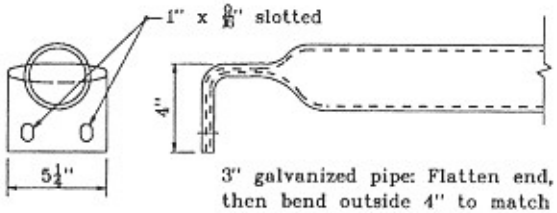

3" galvanized pipe: Flatten end, then bend outside 4" to match end section sides.

TRANSVERSE SAFETY BAR DETAILS

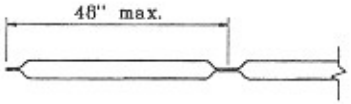

LONGITUDINAL SAFETY BAR DETAIL

INDIANA DEPARTMENT OF TRANSPORTATION

SAFETY METAL CULVERT END SECTIONS FOR SMOOTH PIPE

JANUARY 1998

STANDARD DRAWING NO. E 715-SMES-09

ANTHONY L. UREMOVICH REGISTERED No. 18095 STATE OF INDIANA PROFESSIONAL ENGINEER

DESIGN STANDARDS ENGINEER

DETAILS PLACED IN THIS FORMAT 7-27-99

/s/ Anthony L. Uremovich 7-27-99
DESIGN STANDARDS ENGINEER DATE

/s/ Pirooz Zandi 7-27-99
CHIEF HIGHWAY ENGINEER DATE

ORIGINALLY APPROVED 1-02-98

GENERAL NOTES

1. Toe plate extension is to be the same thickness as the end section. Dimension shall be end section overall width less 6".
2. Transverse safety bars shall be Schedule 40 galvanized steel pipe. Pipe to be galvanized after forming. Number of bars req'd will vary depending on the length of the end section.
3. See Standard Drawing E 715-SMES-11 for Section A-A.
4. See Standard Drawing E 715-SMES-12 for variable dimensions.

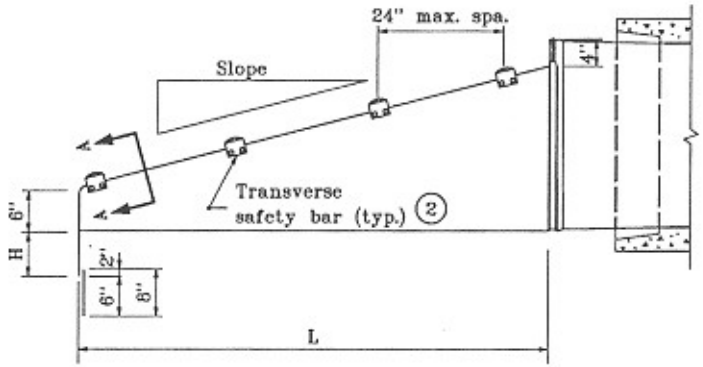

SIDE ELEVATION OF PARALLEL STRUCTURE END SECTION

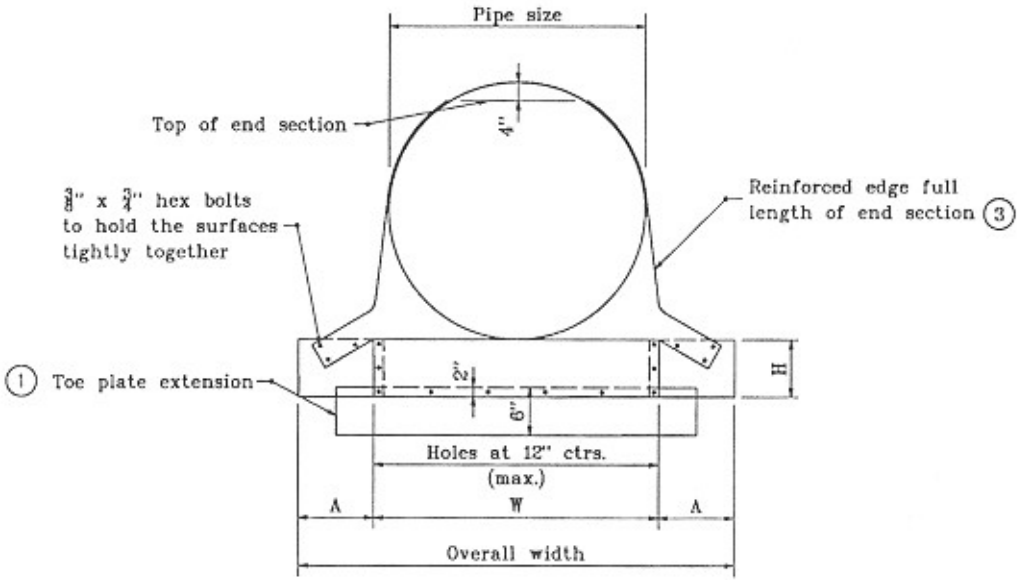

FRONT VIEW

INDIANA DEPARTMENT OF TRANSPORTATION

SAFETY METAL CULVERT END SECTIONS FOR SMOOTH PIPE

JANUARY 1998

STANDARD DRAWING NO. E 715-SMES-10

ANTHONY L. URMOVICH REGISTERED No. 18095 STATE OF INDIANA PROFESSIONAL ENGINEER

DESIGN STANDARDS ENGINEER

DETAILS PLACED IN THIS FORMAT 7-27-99

/s/ Anthony L. Urmovich 7-27-99
DESIGN STANDARDS ENGINEER DATE

/s/ Firoz Zandi 7-27-99
CHIEF HIGHWAY ENGINEER DATE

ORIGINALLY APPROVED 1-02-98

GENERAL NOTES

1. Toe plate extension is to be the same thickness as the end section. Dimensions shall be overall width less 6", by 8" high.
2. Transverse safety bars shall be Schedule 40 galvanized steel pipe. Pipe to be galvanized after forming. Number of bars req'd. will vary depending on the length of the end section.
3. Slotted holes for safety bar attachment shall be provided for all end sections.
4. See Standard Drawing E 715-SMES-12 for variable dimensions.
5. See Standard Drawing E 715-SMES-07 for warrant of longitudinal safety bar.

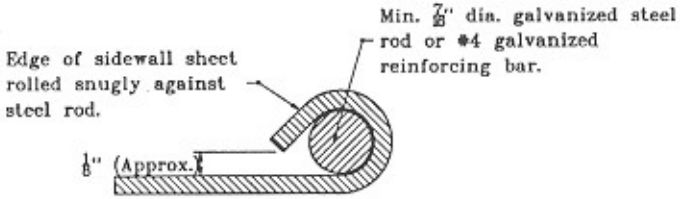

SECTION A-A

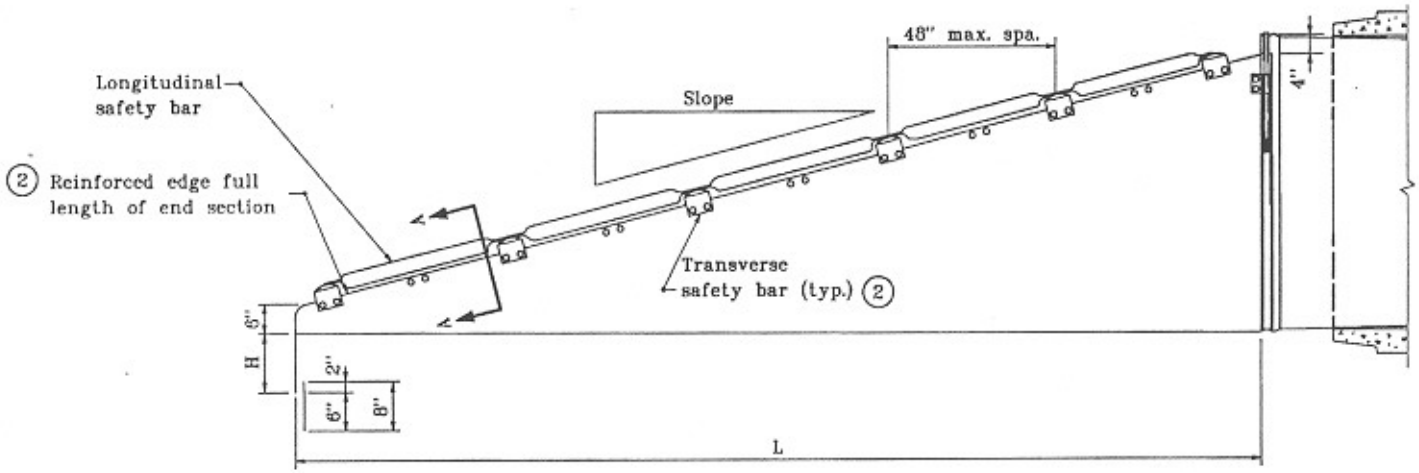

SIDE ELEVATION FOR CROSS STRUCTURE END SECTION

INDIANA DEPARTMENT OF TRANSPORTATION

SAFETY METAL CULVERT END SECTIONS FOR SMOOTH PIPE

JANUARY 1998

STANDARD DRAWING NO. E 715-SMES-11

ANTHONY L. UREMOVICH REGISTERED No. 18095 STATE OF INDIANA PROFESSIONAL ENGINEER

DESIGN STANDARDS ENGINEER

DETAILS PLACED IN THIS FORMAT 7-27-99

/s/ Anthony L. Uremovich 7-27-99
DESIGN STANDARDS ENGINEER DATE

/s/ Firoos Zandi 7-27-99
CHIEF HIGHWAY ENGINEER DATE

ORIGINALLY APPROVED 1-02-98

SAFETY METAL END SECTIONS FOR CIRCULAR PIPES									
Pipe Dia. (in.)	Min. Thick.	Dimensions, in.				L Dimensions			
		A	H	W	Overall Width	Slope	Length (in.)	Slope	Length (in.)
15	.064	8	6	21	37	4:1	20	6:1	30
18	.064	8	6	24	40	4:1	32	6:1	48
21	.064	8	6	27	43	4:1	44	6:1	66
24	.064	8	6	30	46	4:1	56	6:1	84
27	.109	12	9	33	57	4:1	68	6:1	102
30	.109	12	9	36	60	4:1	80	6:1	120
33	.109	12	9	39	63	4:1	92	6:1	138
36	.109	12	9	42	66	4:1	104	6:1	156
42	.109	16	12	48	80	4:1	128	6:1	192
48	.109	16	12	54	86	4:1	152	6:1	228
54	.109	16	12	60	92	4:1	176	6:1	264
60	.109	16	12	66	98	4:1	200	6:1	300

SAFETY METAL END SECTIONS FOR HORIZONTAL ELLIPTICAL PIPE											
Equiv. Dia. (in.)	(inches)		Min. Thick.	Dimensions (inches)				L Dimension			
	Span	Rise	in.	A	H	W	Overall Width	Slope	Length (in.)	Slope	Length (in.)
18	23	14	.064	8	6	29	45	4:1	16	6:1	24
24	30	19	.064	8	6	36	52	4:1	36	6:1	54
27	34	22	.079	12	9	40	64	4:1	48	6:1	72
30	38	24	.079	12	9	44	68	4:1	56	6:1	84
33	42	27	.109	12	9	48	72	4:1	68	6:1	102
36	45	29	.109	16	12	51	83	4:1	76	6:1	114
42	53	34	.109	16	12	59	91	4:1	96	6:1	144
48	60	38	.109	16	12	66	98	4:1	112	6:1	168
54	68	43	.109	16	12	74	106	4:1	132	6:1	198
60	76	48	.109	16	12	80	112	4:1	152	6:1	228

INDIANA DEPARTMENT OF TRANSPORTATION

SAFETY METAL CULVERT END SECTIONS FOR SMOOTH PIPE

JANUARY 1998

STANDARD DRAWING NO. **E 715-SMES-12**

ANTHONY L. UREMOVICH REGISTERED No. 18095 STATE OF INDIANA PROFESSIONAL ENGINEER

DESIGN STANDARDS ENGINEER

DETAILS PLACED IN THIS FORMAT 11-15-99

/s/ Anthony L. Uremovich 11-15-99
DESIGN STANDARDS ENGINEER DATE

/s/ Firoze Zandi 11-15-99
CHIEF HIGHWAY ENGINEER DATE

ORIGINALLY APPROVED 1-02-98

GENERAL NOTES

1. Toe plate extension is to be the same thickness as the end section. Dimensions shall be overall width less 6", by 8" high.
2. Transverse safety bars shall be Schedule 40 galvanized steel pipe. Pipe to be galvanized after forming. Number of bars req'd. will vary depending on the length of the end section.
3. Slotted holes for safety bar attachment shall be provided for all end sections.
4. See Standard Drawing E 715-SMES-12 for variable dimensions.
5. See Standard Drawing E 715-SMES-07 for warrant of longitudinal safety bar.

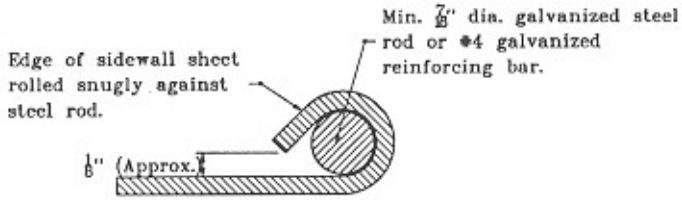

SECTION A-A

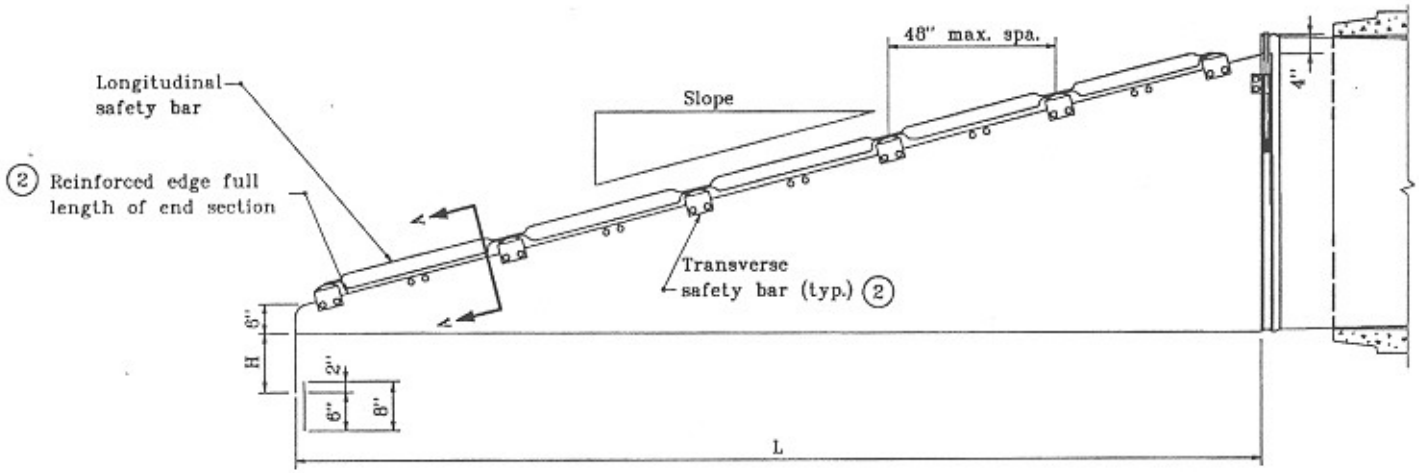

SIDE ELEVATION FOR CROSS STRUCTURE END SECTION

INDIANA DEPARTMENT OF TRANSPORTATION

SAFETY METAL CULVERT END SECTIONS FOR SMOOTH PIPE

JANUARY 1998

STANDARD DRAWING NO. E 715-SMES-11

ANTHONY L. UREMOVICH REGISTERED No. 18095 STATE OF INDIANA PROFESSIONAL ENGINEER

DESIGN STANDARDS ENGINEER

DETAILS PLACED IN THIS FORMAT 7-27-99

/s/ Anthony L. Uremovich 7-27-99
DESIGN STANDARDS ENGINEER DATE

/s/ Firooz Zandi 7-27-99
CHIEF HIGHWAY ENGINEER DATE

ORIGINALLY APPROVED 1-02-98