GENERAL NOTES

1. Hook bolts and anchor straps shall be used at both upstream and downstream ends of all C.A., C.S., and structural plate pipes and pipe diameter or span of 84" or greater.

2. See Standard Drawing E 715-PASD-01 for anchor strap details.

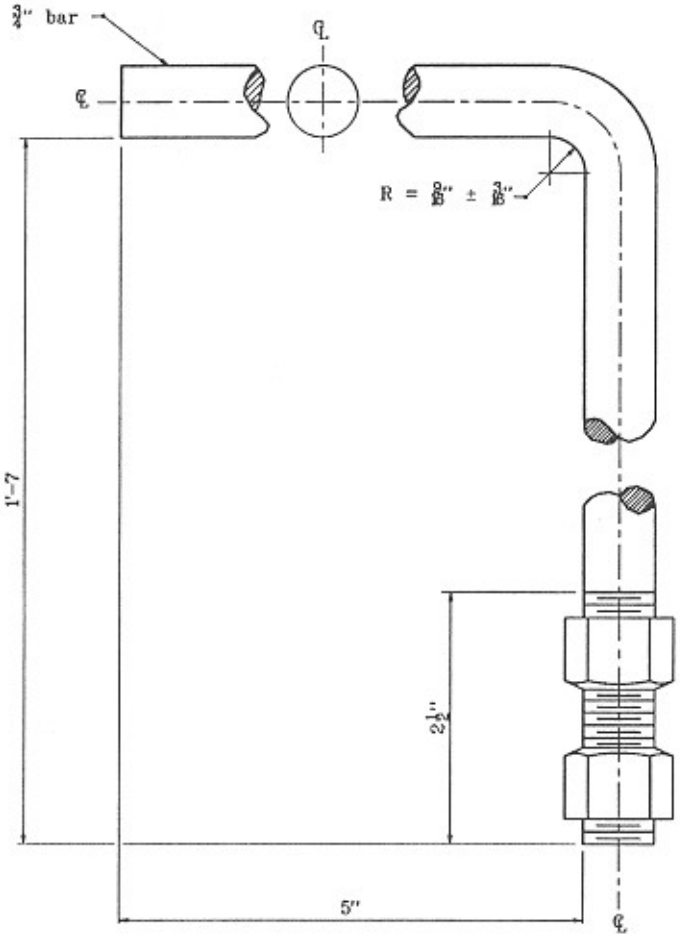

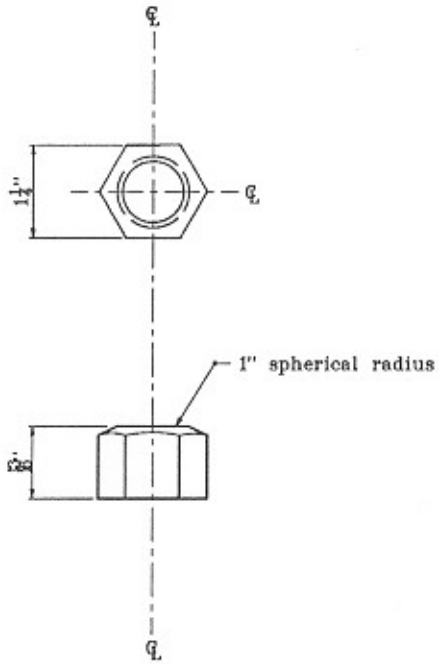

GALVANIZED
HOOK BOLT AND NUTS

INDIANA DEPARTMENT OF TRANSPORTATION

PIPE ANCHOR HOOK BOLT DETAILS

APRIL 1995

STANDARD DRAWING NO. E 715-PAHB-01

ANTHONY L. UREMOVICH REGISTERED No. 18095 STATE OF INDIANA PROFESSIONAL ENGINEER

DESIGN STANDARDS ENGINEER

DETAILS PLACED IN THIS FORMAT 7-27-95

/s/ Anthony L. Uremovich 4-03-95
DESIGN STANDARDS ENGINEER DATE

/s/ [illegible] 4-03-95
CHIEF HIGHWAY ENGINEER DATE

ORIGINALLY APPROVED 4-01-95

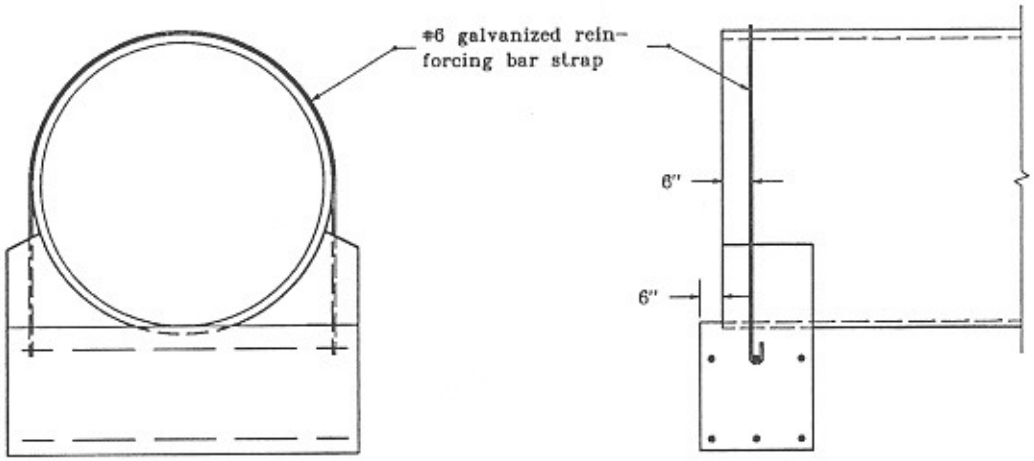

#6 REINFORCING BAR STRAP DETAILS

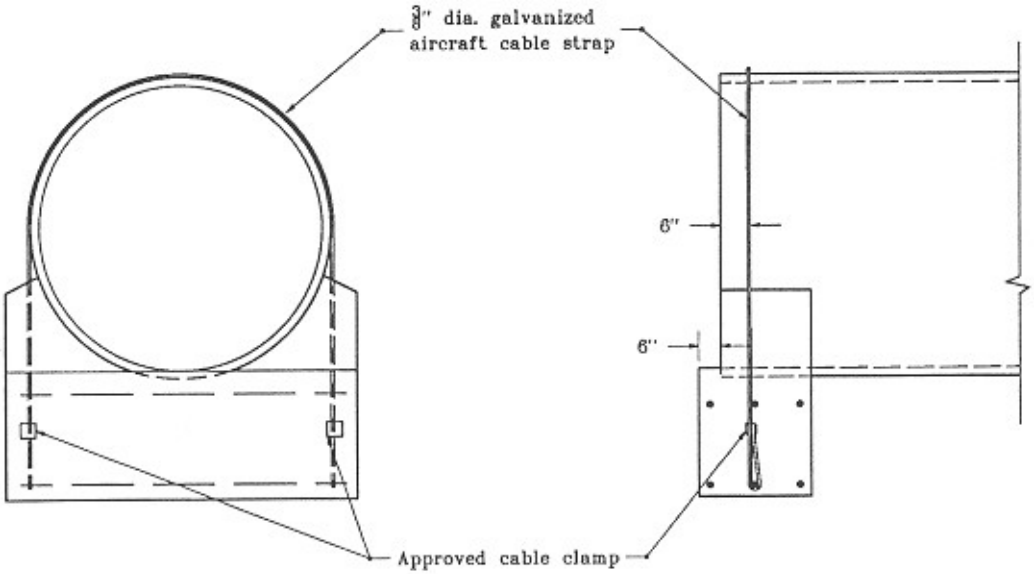

3/8" AIRCRAFT CABLE STRAP DETAILS

GENERAL NOTES

1. Anchor straps shall be used at both upstream and downstream ends of all C.A., C.S., and structural plate pipes and pipe arches with a diameter or span of 42" or greater.
2. Hook bolts and anchor straps shall be used at both upstream and downstream ends of all C.A., C.S., and structural plate pipes and pipe arches with a diameter or span of 84" or greater.
3. See Standard Drawing E 715-PAHB-01 for hook bolt details.
4. Riprap shall be placed at the ends of pipe structures when shown on the plans.

INDIANA DEPARTMENT OF TRANSPORTATION

PIPE ANCHOR STRAP DETAILS

JANUARY 1998

STANDARD DRAWING NO. E 715-PASD-01

ANTHONY L. UREMOVICH REGISTERED No. 18095 STATE OF INDIANA PROFESSIONAL ENGINEER

DESIGN STANDARDS ENGINEER

DETAILS PLACED IN THIS FORMAT 7-27-99

/s/ Anthony L. Uremovich 7-27-99
DESIGN STANDARDS ENGINEER DATE

/s/ Firoos Zandi 7-27-99
CHIEF HIGHWAY ENGINEER DATE

ORIGINALLY APPROVED 1-02-98

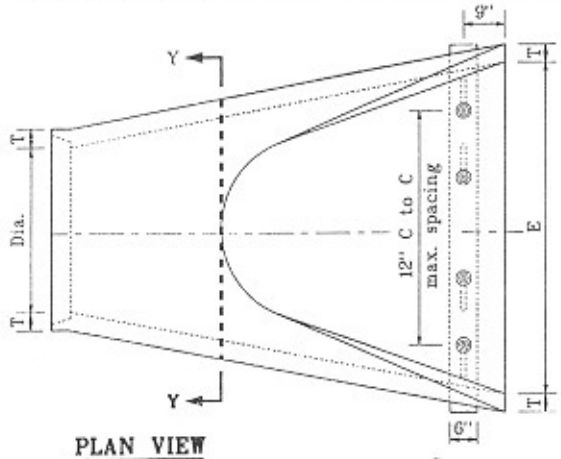

PLAN VIEW

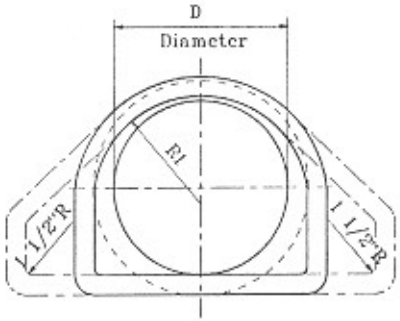

SECTION Y-Y

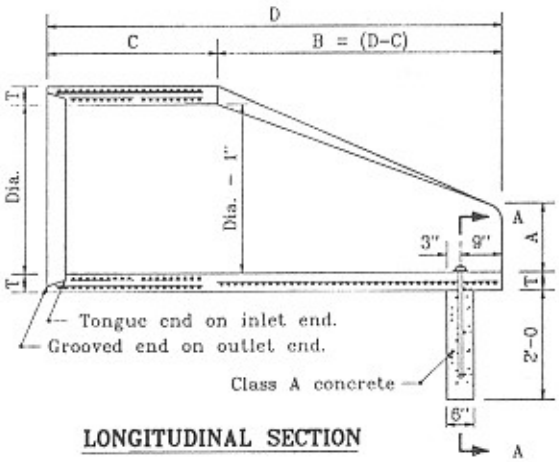

LONGITUDINAL SECTION

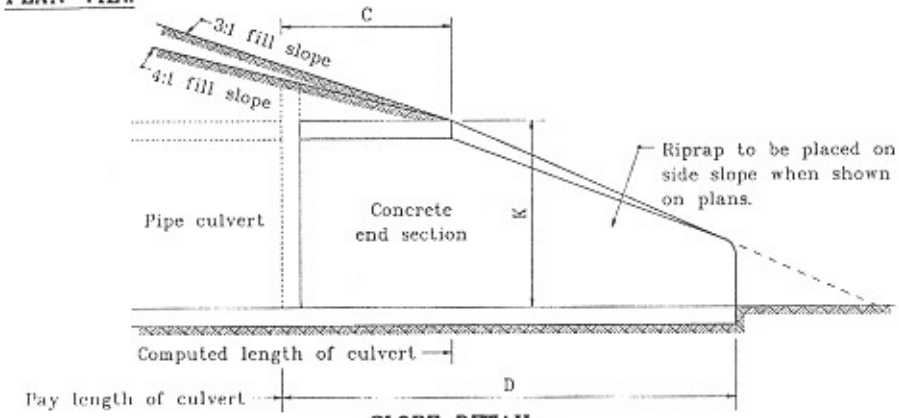

SLOPE DETAIL

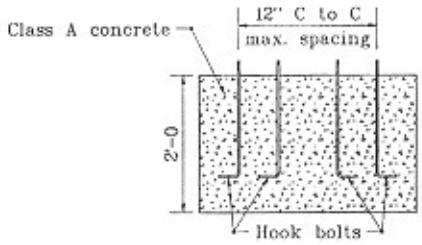

SECTION A-A

Concrete Pipe Toe Anchor

TABLE OF DIMENSIONS

DIA.	T (min.)	A (±1")	C (±1")	D (±1")	E (±1")	K	R1	R2	APPROX. WEIGHT, lb.
12"	2"	5"	4'-3	6'-2	2'-0	1.3	10 1/8"	9"	800
15"	2 1/4"	7"	4'-0	6'-3	2'-6	1.5	12 1/2"	11"	1100
18"	2 1/2"	11"	4'-1	6'-2	3'-0	1.8	15 1/2"	12"	1300
21"	2 3/4"	11"	3'-6	6'-3	3'-6	2.1	16 1/8"	13"	1500
24"	3"	1'-0	2'-8	6'-3	4'-0	2.3	16 3/8"	14"	1800
27"	3 1/4"	1'-1	2'-5	6'-3	4'-6	2.6	18 3/8"	14 1/2"	2100
30"	3 1/2"	1'-2	1'-10	6'-3	5'-0	2.9	18 1/2"	15"	2400
33"	3 3/4"	1'-3	3'-6	8'-3	5'-6	3.1	23 3/4"	17 1/2"	4100
36"	4"	1'-5	3'-1	8'-3	6'-0	3.4	24 5/8"	20"	4200

INDIANA DEPARTMENT OF TRANSPORTATION

PRECAST CONCRETE END SECTION

MAY 1998

STANDARD DRAWING NO. **E 715-PCES-01**

ANTHONY L. UREMOVICH REGISTERED No. 18095 STATE OF INDIANA PROFESSIONAL ENGINEER

DESIGN STANDARDS ENGINEER

DETAILS PLACED IN THIS FORMAT 11-15-99

/s/ Anthony L. Uremovich 11-15-99
DESIGN STANDARDS ENGINEER DATE

/s/ Firoze Zondi 11-15-99
CHIEF HIGHWAY ENGINEER DATE
ORIGINALLY APPROVED 5-01-98