PIPE DIA.	END SECTION THICK. (in.)	DIMENSIONS A (±1")	B (Max.)	H (±1")	L (±1½")	W (±2")	APPROX. SLOPE	BODY
12	.064	6	6	6	21	24	2½:1	1 Pc.
15	.064	7	8	6	26	30	2½:1	1 Pc.
18	.064	8	10	6	31	36	2½:1	1 Pc.
21	.064	9	12	6	36	42	2½:1	1 Pc.
24	.064	10	13	6	41	48	2½:1	1 Pc.
30	.079	12	16	8	51	60	2½:1	1 Pc.
36	.079	14	19	9	60	72	2½:1	2 Pc.

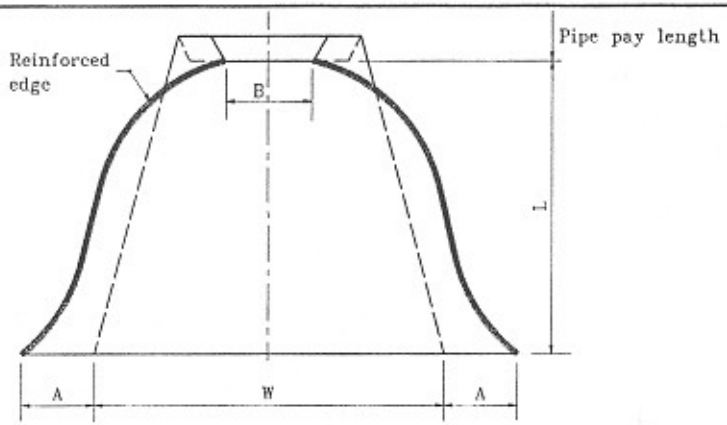

PLAN VIEW

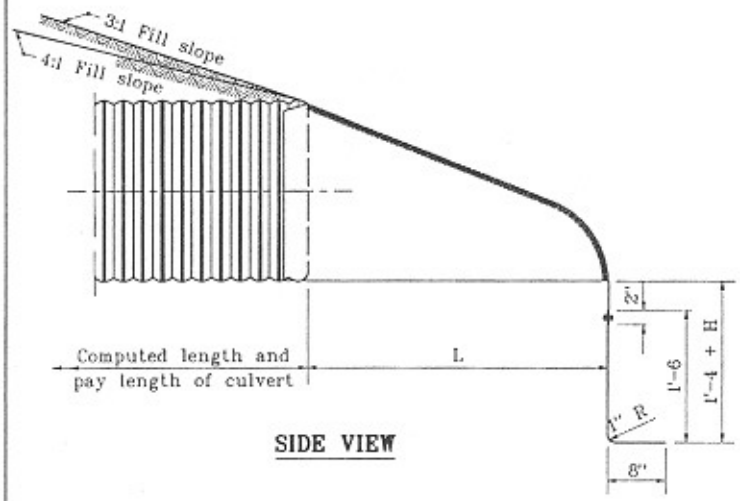

SIDE VIEW

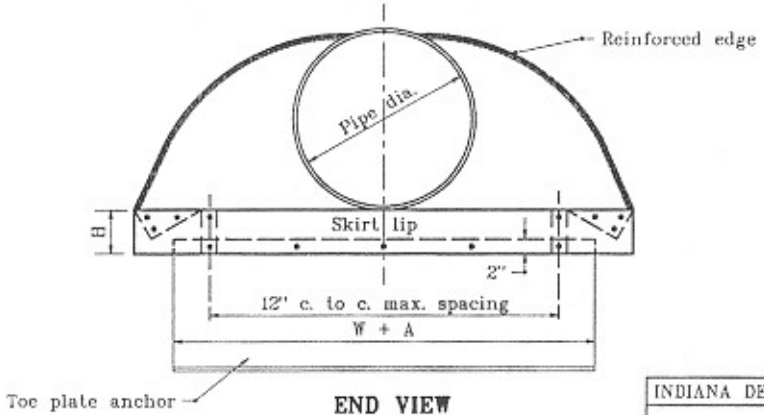

END VIEW

INDIANA DEPARTMENT OF TRANSPORTATION

METAL PIPE END SECTION

JANUARY 1998

STANDARD DRAWING NO. E 715-MPES-01

ANTHONY L. UREMOVICH REGISTERED No. 18095 STATE OF INDIANA PROFESSIONAL ENGINEER

DESIGN STANDARDS ENGINEER

DETAILS PLACED IN THIS FORMAT 11-15-99

/s/ Anthony L. Uremovich 11-15-99
DESIGN STANDARDS ENGINEER DATE

/s/ Firooz Zandi 11-15-99
CHIEF HIGHWAY ENGINEER DATE

ORIGINALLY APPROVED 1-02-98

PIPE-ARCH DIMENSIONS		END SECTION THICK. (in.)	DIMENSIONS					APPROX. SLOPE	BODY
			A	B	H	L	W		
SPAN	RISE		(±1")	(Max.)	(± 1")	(±1½")	(±2")		
17	13	.064	7	9	6	19	30	2½:1	1 Pc.
21	15	.064	7	10	6	23	36	2½:1	1 Pc.
24	18	.064	8	12	6	28	42	2½:1	1 Pc.
28	20	.064	9	14	6	32	48	2½:1	1 Pc.
35	24	.079	10	16	8	39	60	2½:1	1 Pc.
42	29	.079	12	18	9	46	75	2½:1	1 Pc.

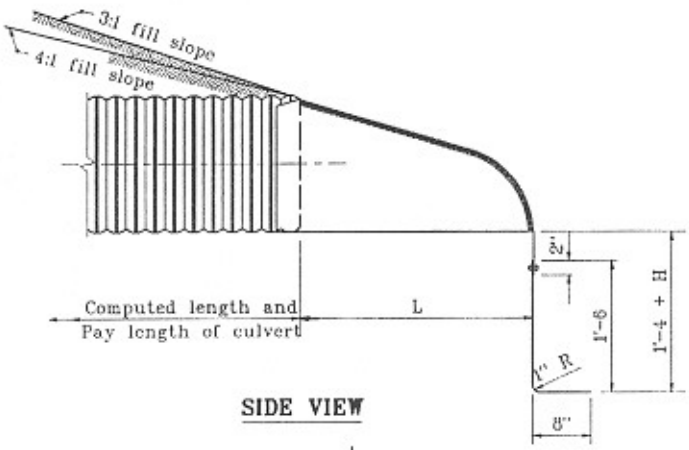

SIDE VIEW

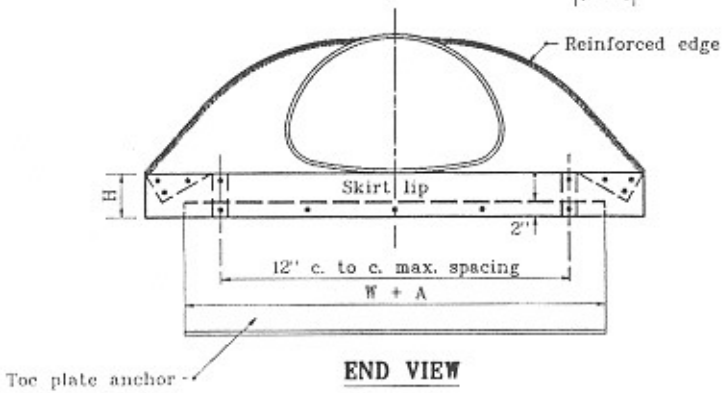

END VIEW

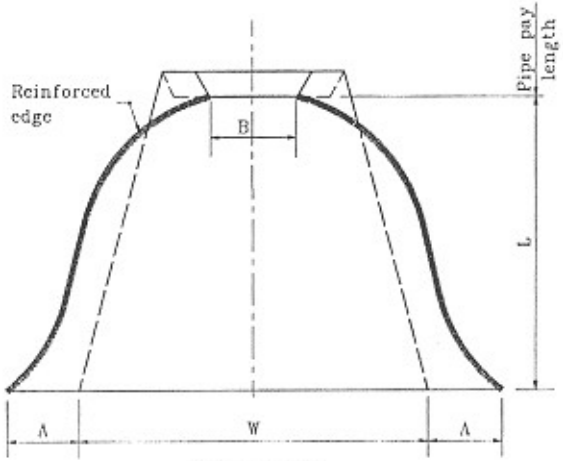

PLAN VIEW

INDIANA DEPARTMENT OF TRANSPORTATION

METAL PIPE ARCH END SECTION

JANUARY 1998

STANDARD DRAWING NO. **E 715-MPES-02**

ANTHONY L. UREMOVICH REGISTERED No. 18095 STATE OF INDIANA PROFESSIONAL ENGINEER

DESIGN STANDARDS ENGINEER

DETAILS PLACED IN TMS FORMAT 11-15-99

/s/ Anthony L. Uremovich 11-15-99
DESIGN STANDARDS ENGINEER DATE

/s/ Firooz Zandi 11-15-99
CHIEF HIGHWAY ENGINEER DATE

ORIGINALLY APPROVED 1-02-98

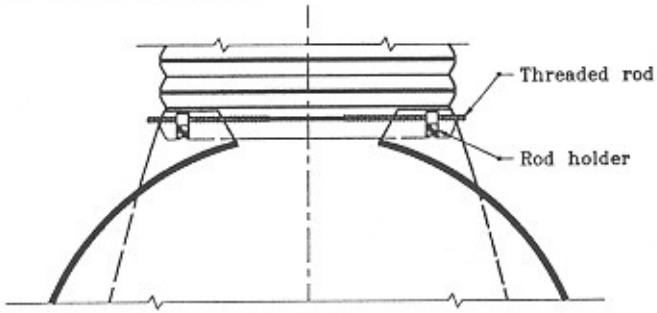

TYPE 1
FOR 17" x 13" THROUGH 42" x 29" ONLY

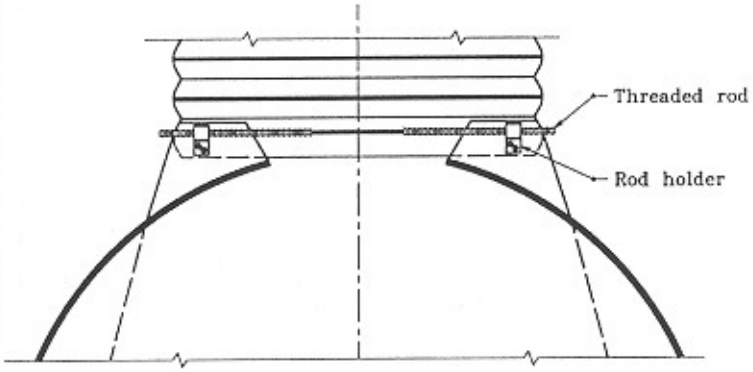

TYPE 4
FOR 30" THROUGH 36" ONLY

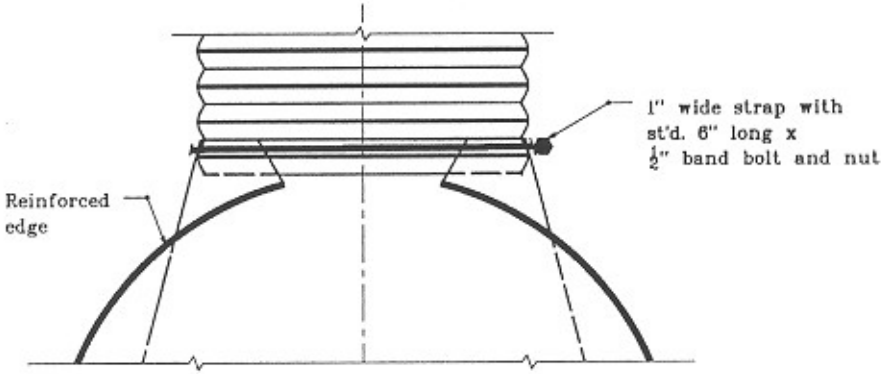

ALTERNATE TYPE 3
FOR 12" THROUGH 24" ONLY

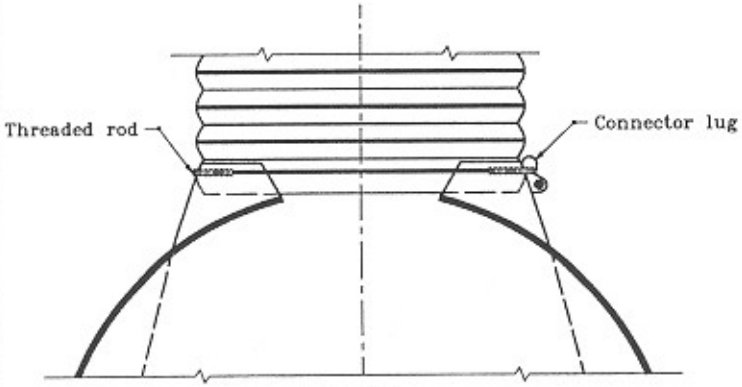

TYPE 3
FOR 12" THROUGH 24" ONLY

INDIANA DEPARTMENT OF TRANSPORTATION

METAL PIPE END SECTION CONNECTIONS

JANUARY 1998

STANDARD DRAWING NO.E 715-MPES-03

ANTHONY L. URENOVICH REGISTERED No. 18095 STATE OF INDIANA PROFESSIONAL ENGINEER

DESIGN STANDARDS ENGINEER

DETAILS PLACED IN THIS FORMAT 7-27-99

/s/ Anthony L. Urenovich 7-27-99
DESIGN STANDARDS ENGINEER DATE

/s/ Firoos Zandi 7-27-99
CHIEF HIGHWAY ENGINEER DATE

ORIGINALLY APPROVED 1-02-98

PIPE-ARCH DIMENSIONS		END SECTION THICK. (in.)	DIMENSIONS					APPROX. SLOPE	BODY
			A	B	H	L	W		
SPAN	RISE		(±1")	(Max.)	(±1")	(±1½")	(±2")		
17	13	.064	7	9	6	19	30	2½:1	1 Pc.
21	15	.064	7	10	6	23	36	2½:1	1 Pc.
24	18	.064	8	12	6	28	42	2½:1	1 Pc.
28	20	.064	9	14	6	32	48	2½:1	1 Pc.
35	24	.079	10	16	8	39	60	2½:1	1 Pc.
42	29	.079	12	18	9	46	75	2½:1	1 Pc.

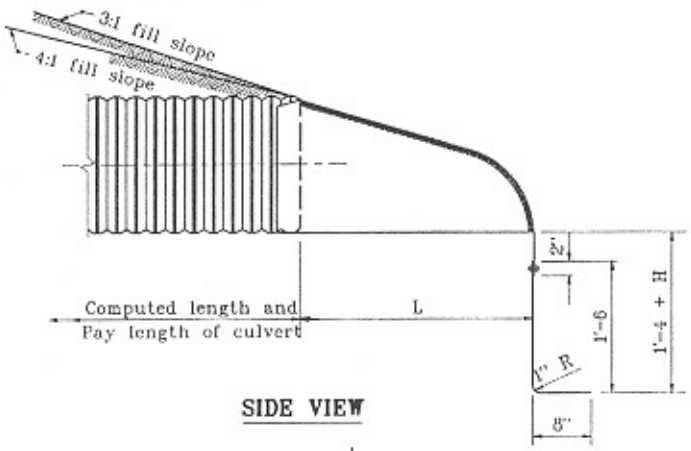

SIDE VIEW

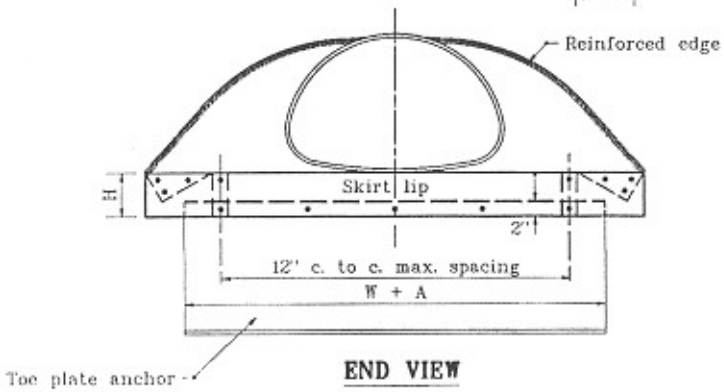

END VIEW

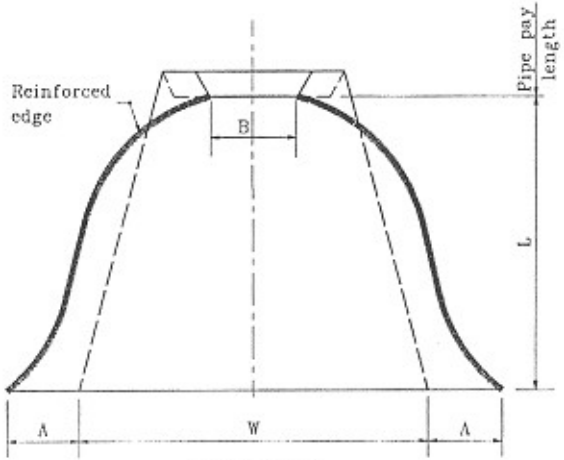

PLAN VIEW

INDIANA DEPARTMENT OF TRANSPORTATION

METAL PIPE ARCH END SECTION

JANUARY 1998

STANDARD DRAWING NO. E 715-MPES-02

ANTHONY L. UREMOVICH REGISTERED No. 18095 STATE OF INDIANA PROFESSIONAL ENGINEER

DESIGN STANDARDS ENGINEER

DETAILS PLACED IN THIS FORMAT 11-15-99

/s/ Anthony L. Uremovich 11-15-99
DESIGN STANDARDS ENGINEER DATE

/s/ Firooz Zandi 11-15-99
CHIEF HIGHWAY ENGINEER DATE

ORIGINALLY APPROVED 1-02-98