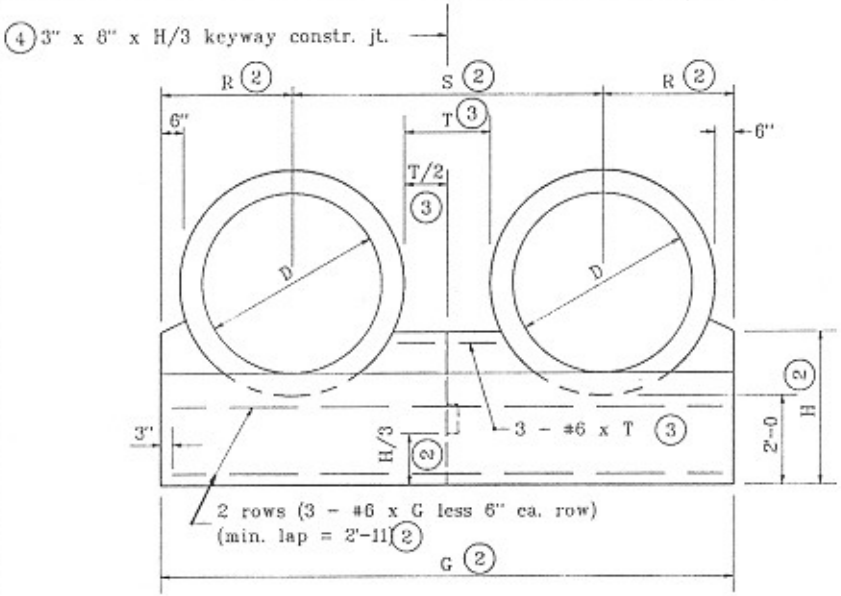

ANCHOR FOR DOUBLE PIPE INSTALLATION
FRONT ELEVATION

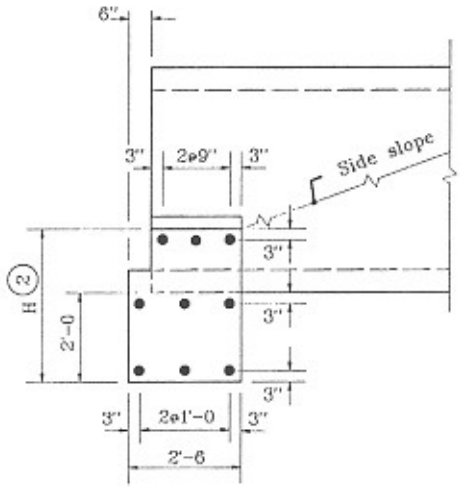

SECTION THROUGH
ANCHOR

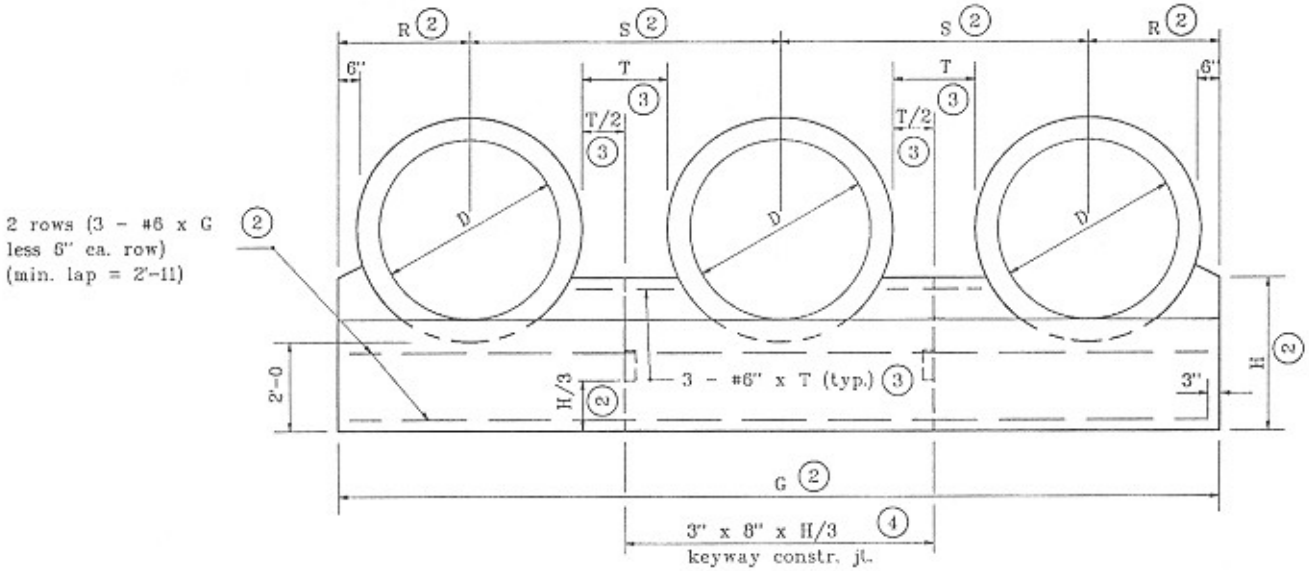

ANCHOR FOR TRIPLE PIPE INSTALLATION
FRONT ELEVATION

GENERAL NOTES

1. Circular reinforced concrete pipes shown. For details of other pipe alternates, see partial elevations on Standard Drawing E 715-MPCA-02.

(2) For dimension enter chart on Standard Drawing E 715-ANCH-01 with known dimension D.

(3) T = Clear distance between pipes.
For D less than 48", T = 2'-0.
For D of 48" to 96", T = 1/2 D
For D greater than 96", T = 4'-0.

(4) No joint required if G is less than or equal to 30'. One joint required if G is greater than 30' but less than or equal to 42'. Two joints required if G is greater than 42'.

INDIANA DEPARTMENT OF TRANSPORTATION

MULTIPLE PIPE CONCRETE ANCHORS

JANUARY 1998

STANDARD DRAWING NO. **E 715-MPCA-01**

ANTHONY L. URENOVICH — No. 18095 — STATE OF INDIANA — PROFESSIONAL ENGINEER
DESIGN STANDARDS ENGINEER

DETAILS PLACED IN THIS FORMAT	7-27-99
/s/ Anthony L. Urenovich — DESIGN STANDARDS ENGINEER	7-27-99 DATE
/s/ Firoz Zandi — CHIEF HIGHWAY ENGINEER	7-27-99 DATE
ORIGINALLY APPROVED	1-02-98

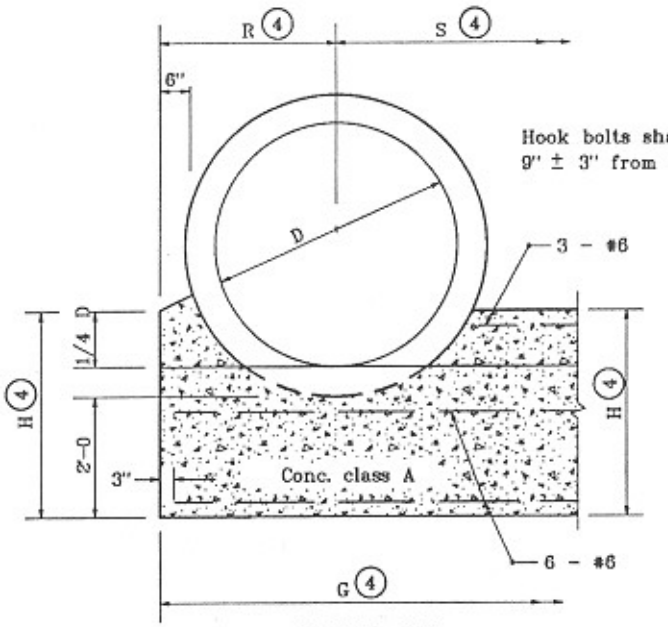

ANCHOR FOR
REINFORCED CONCRETE PIPE
PARTIAL ELEVATION

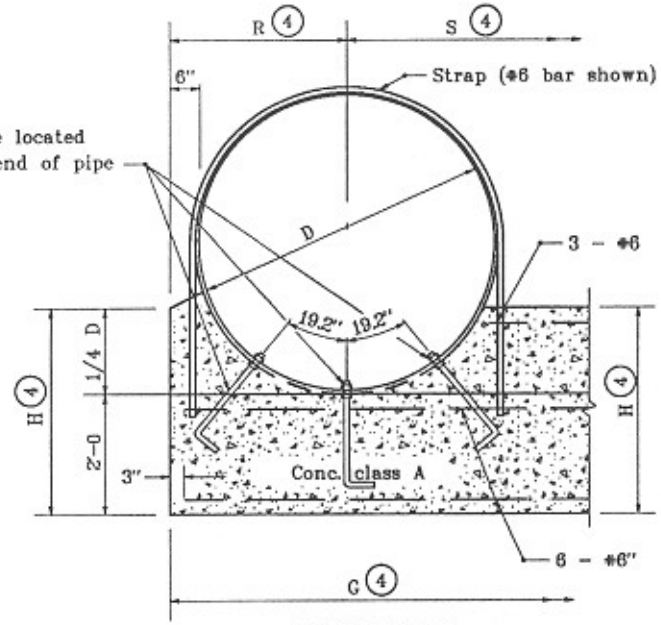

ANCHOR FOR
CORRUGATED METAL PIPE
PARTIAL ELEVATION

GENERAL NOTES

1. Anchor straps shall be used at both upstream and downstream ends of all C.M. pipes with a diameter or span of 42" or greater.
2. Hook bolts and anchor straps shall be used for all C.M. pipes with a diameter or span of 84" or greater.
3. Riprap shall be placed at the ends of pipe structures when shown on the plans.

(4) For dimension, enter chart on Standard Drawing E 715-ANCH-01 with known dimension D.

(5) For dimension, enter chart on Standard Drawing E 715-ANCH-02 with known span and rise.

LEGEND

C.M. = Corrugated Metal

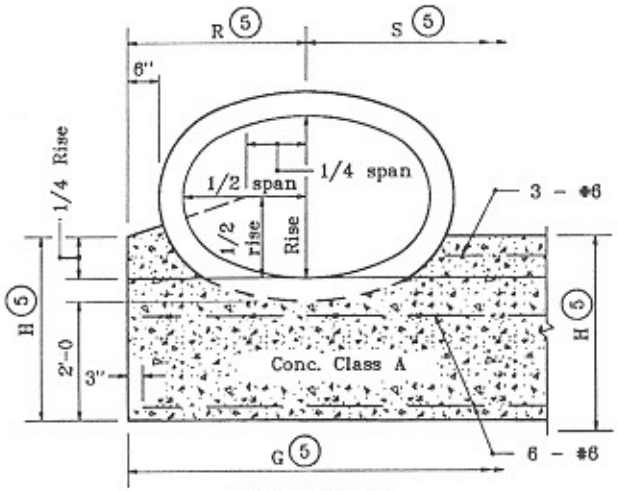

ANCHOR FOR
REINFORCED CONCRETE HORIZONTAL ELLIPTICAL PIPE
PARTIAL ELEVATION

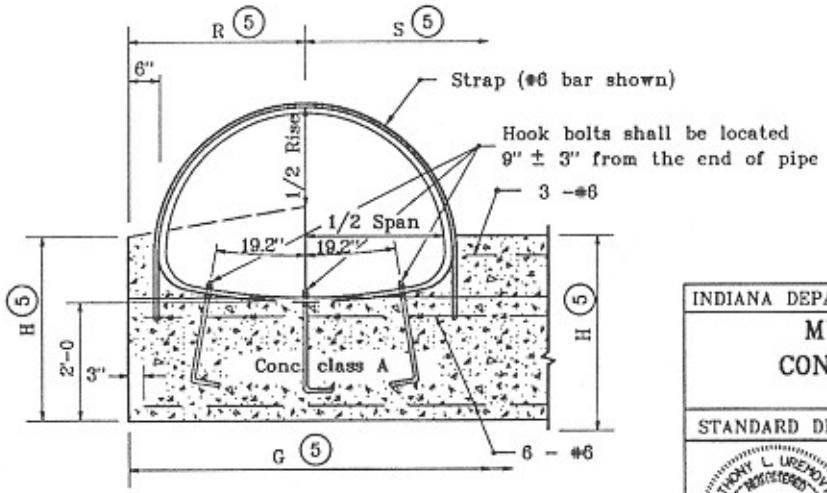

ANCHOR FOR CORRUGATED METAL PIPE-ARCH
PARTIAL ELEVATION

INDIANA DEPARTMENT OF TRANSPORTATION

MULTIPLE PIPE CONCRETE ANCHOR

JANUARY 1998

STANDARD DRAWING NO. E 715-MPCA-02

ANTHONY L. UREMOVICH REGISTERED No. 18095 STATE OF INDIANA PROFESSIONAL ENGINEER

DESIGN STANDARDS ENGINEER

DETAILS PLACED IN THIS FORMAT 7-27-98

/s/ Anthony L. Uremovich 7-27-99
DESIGN STANDARDS ENGINEER — DATE

/s/ Firoos Zandi 7-27-99
CHIEF HIGHWAY ENGINEER — DATE

ORIGINALLY APPROVED 1-02-98