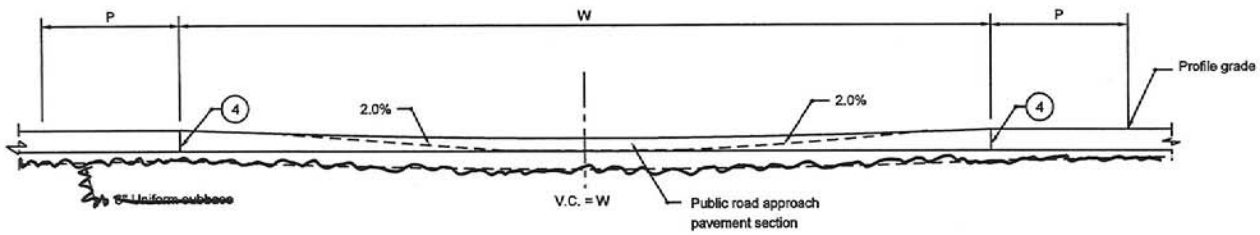

SECTION A-A

LEGEND

(3) ~~Construction~~ Contraction joint type D-1. See Standard Drawing E 503-CCPJ-01 for details.

(4) Longitudinal ~~keyway~~ construction joint, if ~~pavementio~~ pavement are both mainline and crossover PCCP. See Standard Drawing E 503-CCPJ-04 for details.

~~(6) Longitudinal contraction joint. See Standard Drawings E 503-CCPJ-07 AND -08 for details.~~

(9) 1" preformed joint filler

(10) Ear construction type A. See Standard Drawing E 605-ERCN-01 for details.

(11) Ear construction type B. See Standard Drawing E 605-ERCN-02 for details.

(14) Integral concrete curb

L = Minimum longitudinal length of crossover

P = Travel lane or turn lane width

W = Width of median

V.C. = Vertical curve length

= Stabilized shoulder

GENERAL NOTES :

1. The crossover length L is based on a 90° road intersection.
2. PCCP crossover on Dense Graded Subbase shall be constructed if the cross road approach is concrete HMA crossover shall be constructed if the cross road approach is asphalt.
3. See Standard Drawings E 610-PRCO-01A through -07 for crossover plans.
4. The crossover pavement section shall be identical to the section used for the approach.

INDIANA DEPARTMENT OF TRANSPORTATION

PUBLIC ROAD CROSSOVER SECTION

MARCH 2003

STANDARD DRAWING NO. E 610-PRCO-01

ANTHONY L. UREMOVICH REGISTERED No. 18055 STATE OF INDIANA PROFESSIONAL ENGINEER

DESIGN STANDARDS ENGINEER

/s/ Anthony L. Uremovich 3-03-03
DESIGN STANDARDS ENGINEER DATE

/s/ Richard K. Sneider 3-03-03
CHIEF HIGHWAY ENGINEER DATE

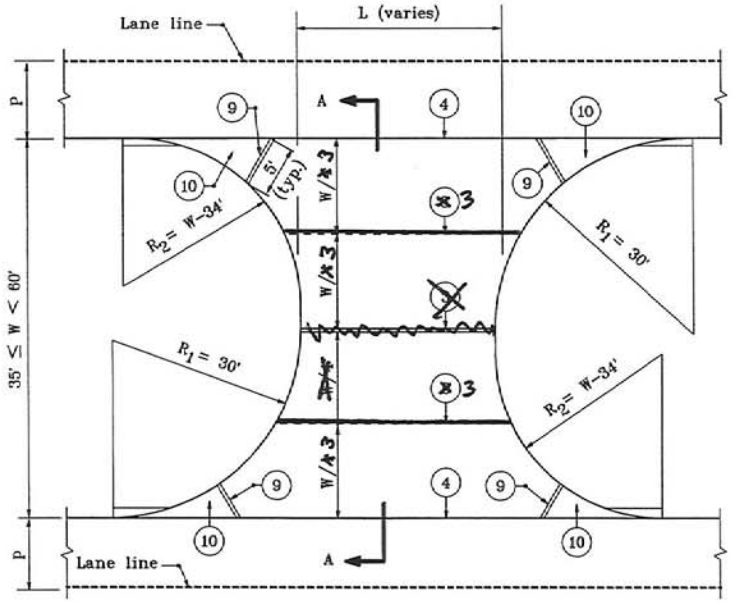

CROSSOVER PLAN FOR MEDIAN WIDTH OF 35 ft OR GREATER BUT LESS THAN 60 ft

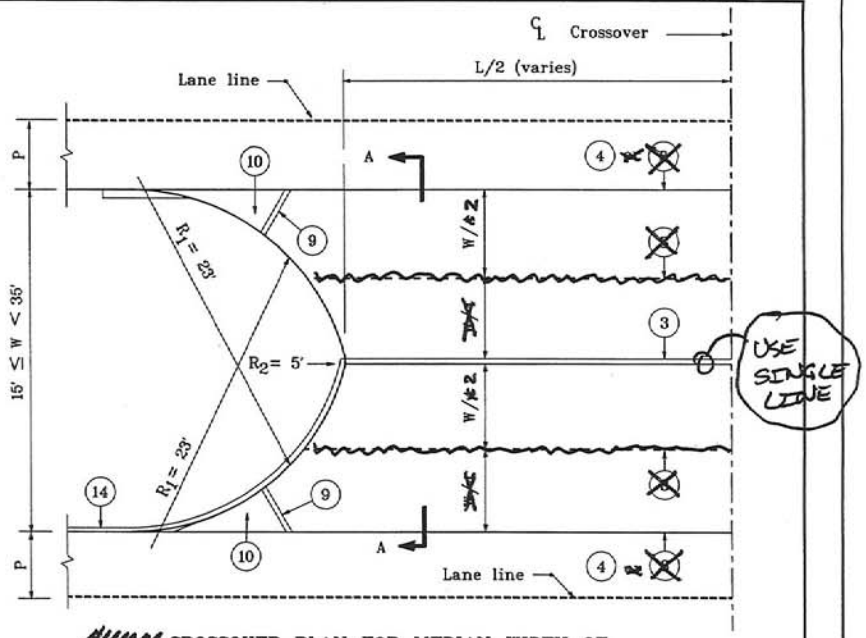

CROSSOVER PLAN FOR MEDIAN WIDTH OF 15 ft OR GREATER BUT LESS THAN 35 ft

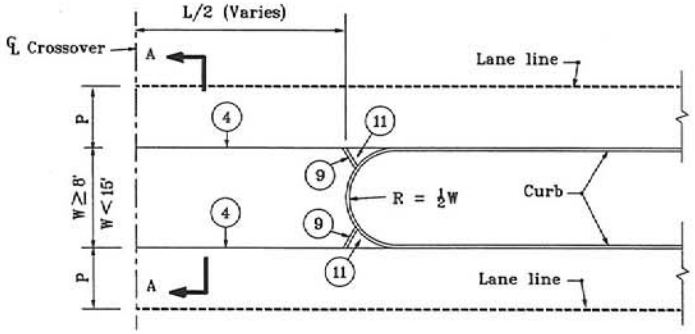

CROSSOVER PLAN FOR MEDIAN WIDTH OF 8 ft OR GREATER BUT LESS THAN 15 ft

NOTES :

1. For median width W of 60' or greater, R = 30'.
2. For median width W of less than 8', L = 100' min.
3. See Standard Drawing E 610-PRCO-01 for Legend and Section A-A.

~~8. Use construction joint in place of keyway joint if W is 32' or more.~~

INDIANA DEPARTMENT OF TRANSPORTATION
PUBLIC ROAD CROSSOVER PLANS MAY 2000
STANDARD DRAWING NO. E 610-PRCO-01A

ANTHONY L. UREHOVICH REGISTERED No. 18995 STATE OF INDIANA PROFESSIONAL ENGINEER

DESIGN STANDARDS ENGINEER

/s/ Anthony L. Urehovich 5-01-00
DESIGN STANDARDS ENGINEER DATE

DRAFT

/s/ Forouz Zandi 5-01-00
CHIEF HIGHWAY ENGINEER DATE

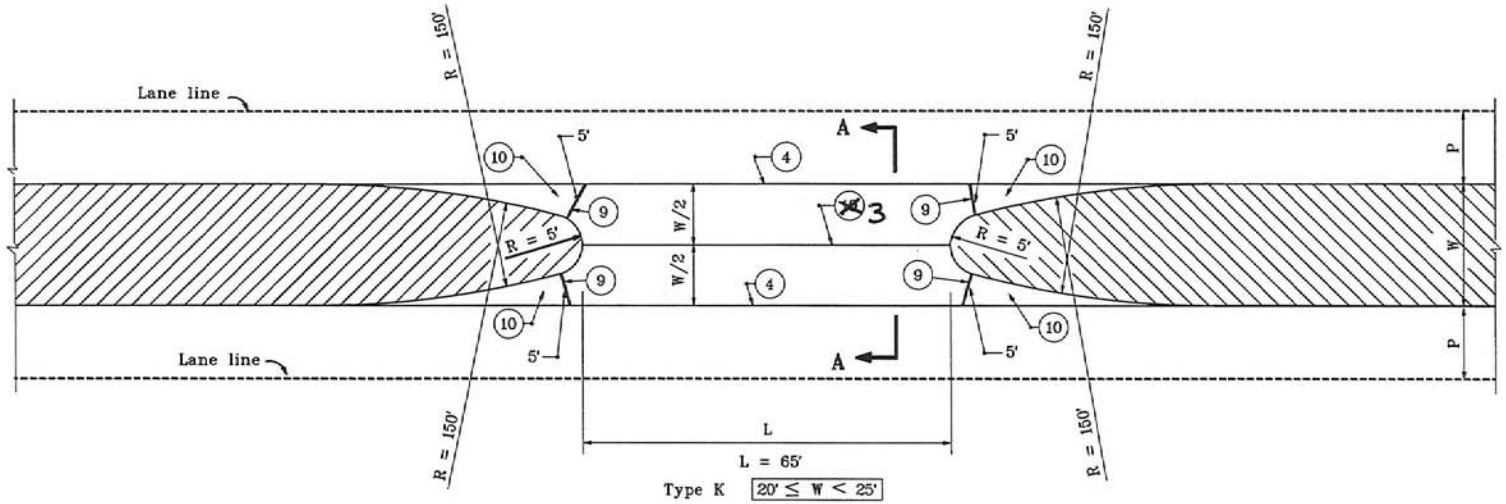

[redacted] **PLAN**

NOTES :

1. See Standard Drawing E 610-PRCO-01 for Legend and Section A-A.

INDIANA DEPARTMENT OF TRANSPORTATION

PUBLIC ROAD CROSSOVERS
TYPE K & L
MAY 2000

STANDARD DRAWING NO. **E 610-PRCO-02**

ANTHONY L. URBEHOVICH REGISTERED No. 18995 STATE OF INDIANA PROFESSIONAL ENGINEER
DESIGN STANDARDS ENGINEER

/s/ Anthony L. Urbehovich 5-01-00
DESIGN STANDARDS ENGINEER DATE

/s/ Firooz Zandi 5-01-00
CHIEF HIGHWAY ENGINEER DATE

DRAFT

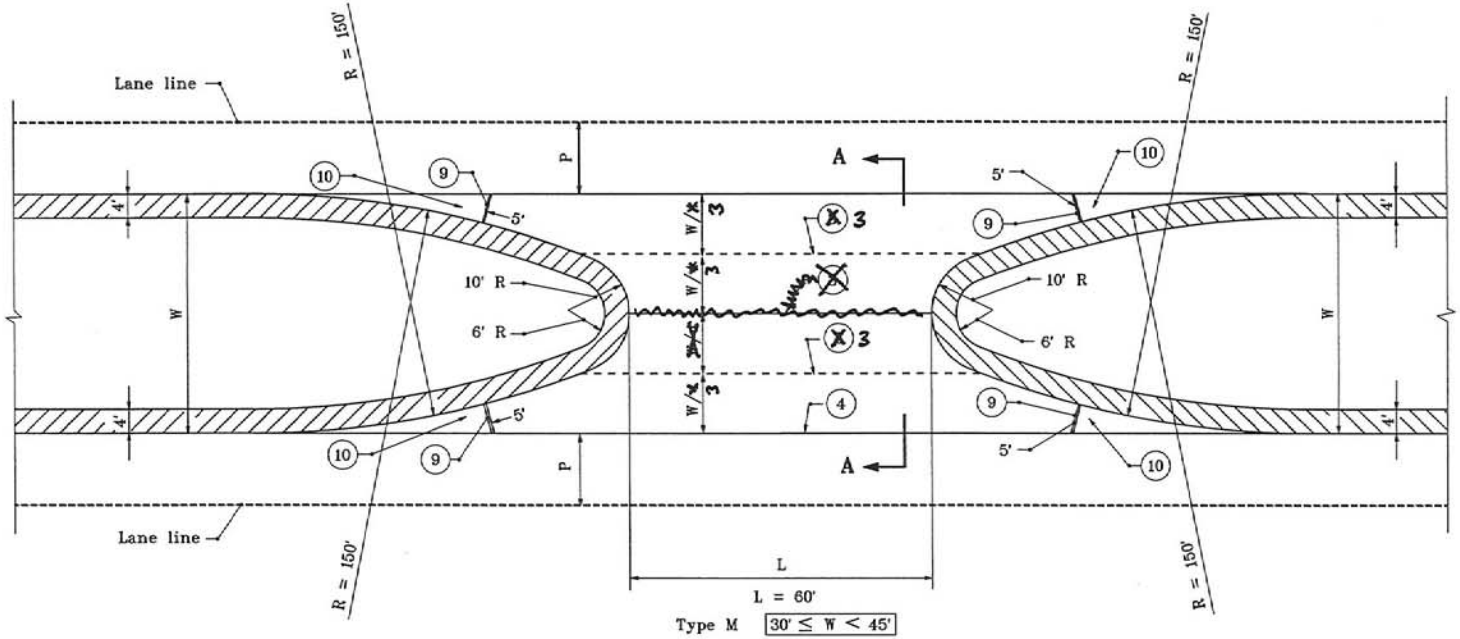

PLAN

NOTES :

1. See Standard Drawing E 610-PRCO-01 for Legend and Section A-A.

INDIANA DEPARTMENT OF TRANSPORTATION

PUBLIC ROAD CROSSOVERS
TYPE M & N
MAY 2000

STANDARD DRAWING NO. E 610-PRCO-03

ANTHONY L. UREMOVICH REGISTERED No. 18955 STATE OF INDIANA PROFESSIONAL ENGINEER

DESIGN STANDARDS ENGINEER

/s/ Anthony L. Uremovich 5-01-00
DESIGN STANDARDS ENGINEER DATE

DRAFT

/s/ Firooz Zandi 5-01-00
CHIEF HIGHWAY ENGINEER DATE

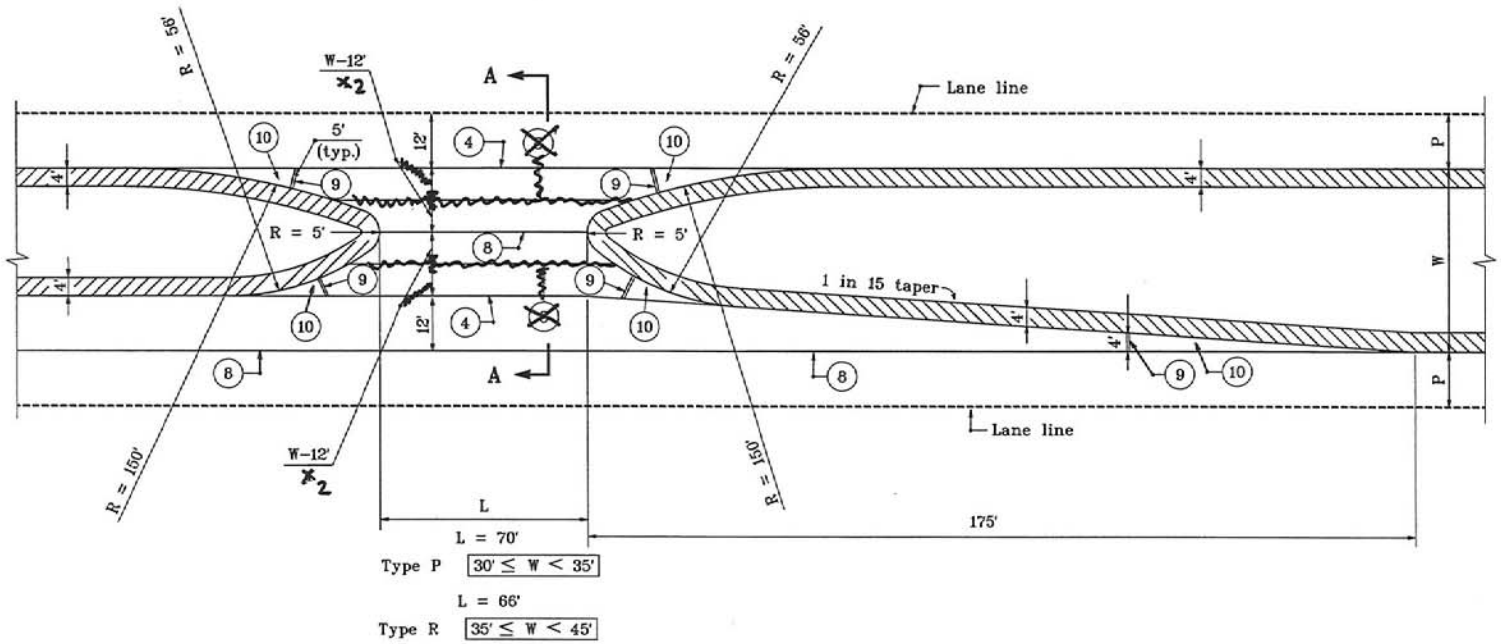

PLAN

NOTES :

1. See Standard Drawing E 610-PRCO-01 for Legend and Section A-A.

INDIANA DEPARTMENT OF TRANSPORTATION

PUBLIC ROAD CROSSOVERS
TYPE P & R

MAY 2000

STANDARD DRAWING NO. **E 610-PRCO-04**

ANTHONY L. UREMOVICH REGISTERED No. 18055 STATE OF INDIANA PROFESSIONAL ENGINEER

DESIGN STANDARDS ENGINEER

/s/ Anthony L. Uremovich — DESIGN STANDARDS ENGINEER — 5-01-00 DATE

DRAFT

/s/ Firooz Zandi — CHIEF HIGHWAY ENGINEER — 5-01-00 DATE

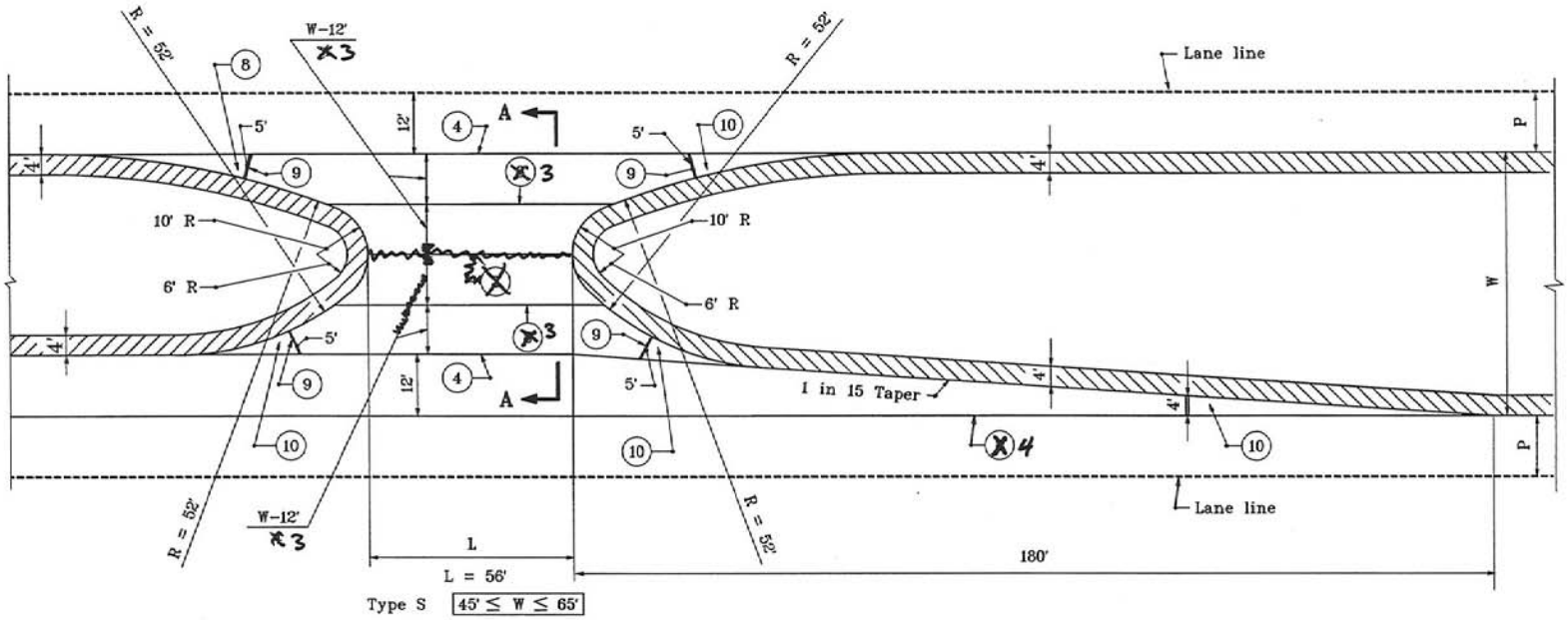

PLAN

NOTES :

1. See Standard Drawing E 610-PRCO-01 for Legend and Section A-A.

INDIANA DEPARTMENT OF TRANSPORTATION

PUBLIC ROAD CROSSOVER TYPE S

MAY 2000

STANDARD DRAWING NO. **E 610-PRCO-05**

ANTHONY L. UREMOVICH REGISTERED No. 18995 STATE INDIANA PROFESSIONAL ENGINEER

DESIGN STANDARDS ENGINEER

/s/ Anthony L. Uremovich 5-01-00
DESIGN STANDARDS ENGINEER DATE

/s/ Firooz Zandi 5-01-00
CHIEF HIGHWAY ENGINEER DATE

DRAFT

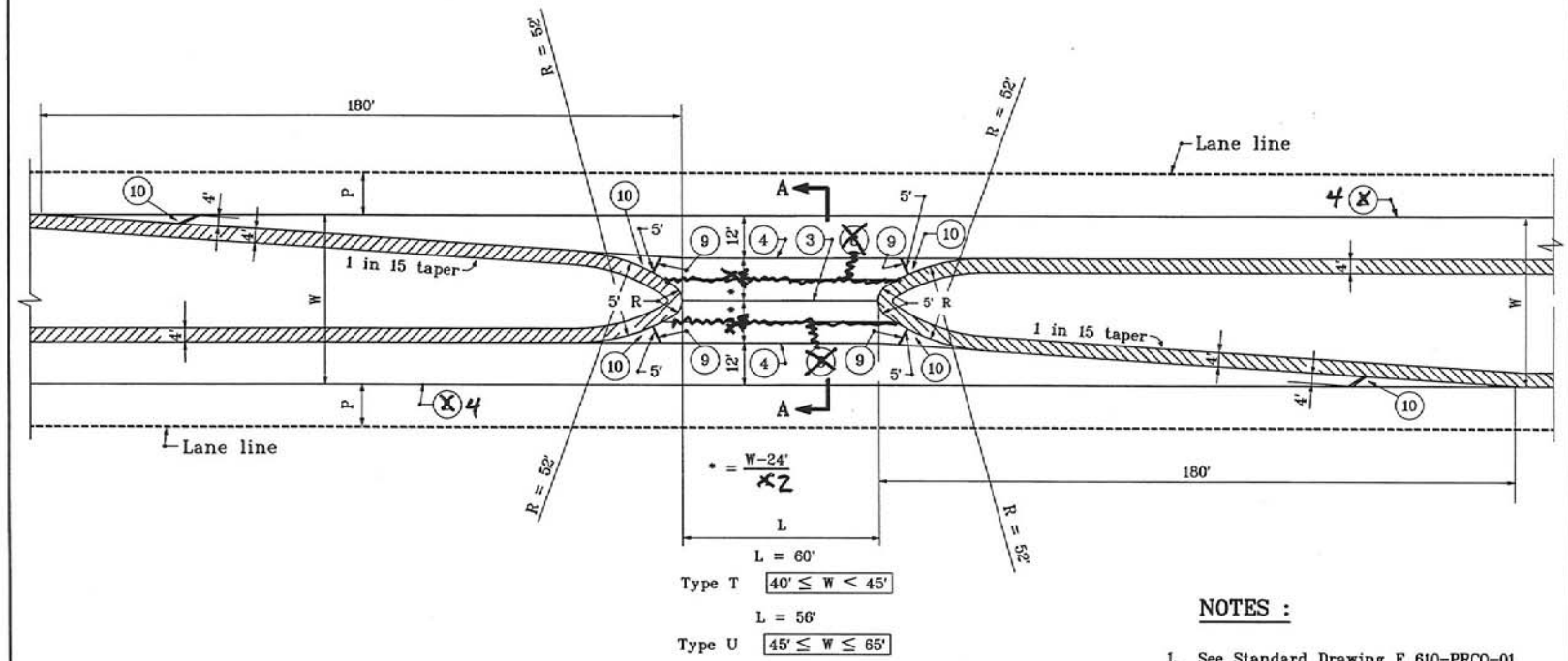

PLAN

NOTES :

1. See Standard Drawing E 610-PRCO-01 for Legend and Section A-A.

INDIANA DEPARTMENT OF TRANSPORTATION

PUBLIC ROAD CROSSOVERS
TYPE T & U
MAY 2000

STANDARD DRAWING NO. **E 610-PRCO-06**

ANTHONY L. URBENOVICH REGISTERED No. 18995 STATE OF INDIANA PROFESSIONAL ENGINEER
DESIGN STANDARDS ENGINEER

/s/ Anthony L. Urbenovich 5-01-00
DESIGN STANDARDS ENGINEER DATE

/s/ Firooz Zandi 5-01-00
CHIEF HIGHWAY ENGINEER DATE