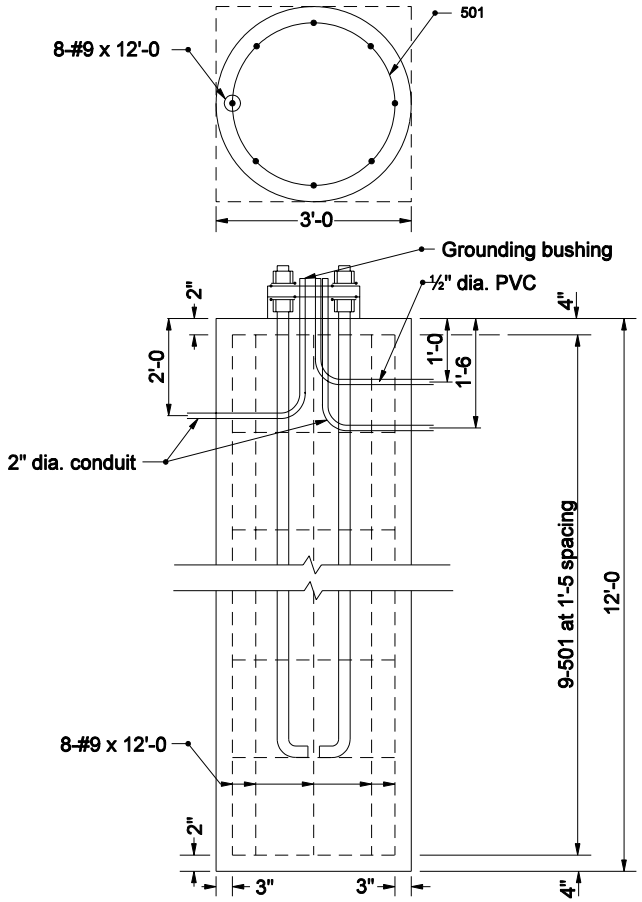

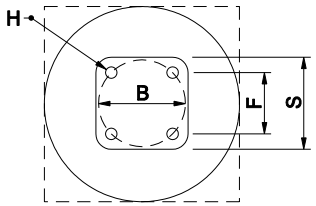

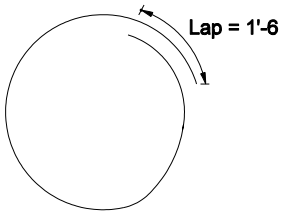

501 x 9'-4

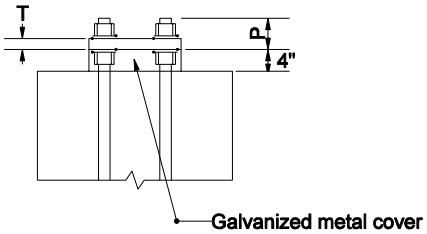

BASE PLATE AND ANCHOR BOLT DATA								
Anchor bolts	B	F	H	P	S	T	Pole size	Foundation
$2\frac{1}{4}$" x 8'-0	1'-10	1'-3½	2¾"	4¾"	1'-11	2½"	1'-3 x 30 ft 1'-5 x 36 ft	3'-0 x 12 ft

INDIANA DEPARTMENT OF TRANSPORTATION

STEEL SIGNAL STRAIN POLE FOUNDATION DETAILS

SEPTEMBER 2004

STANDARD DRAWING NO. E 805-SGSC-02

RICHARD L. VanCLEAVE REGISTERED No. 9750 STATE OF INDIANA PROFESSIONAL ENGINEER

DESIGN STANDARDS ENGINEER

/s/ Richard L. VanCleave 9-01-04
DESIGN STANDARDS ENGINEER DATE

/s/ Richard K. Smutzer 9-01-04
CHIEF HIGHWAY ENGINEER DATE