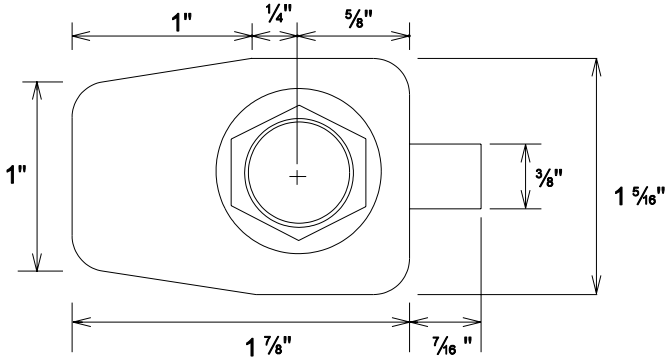

PLAN VIEW

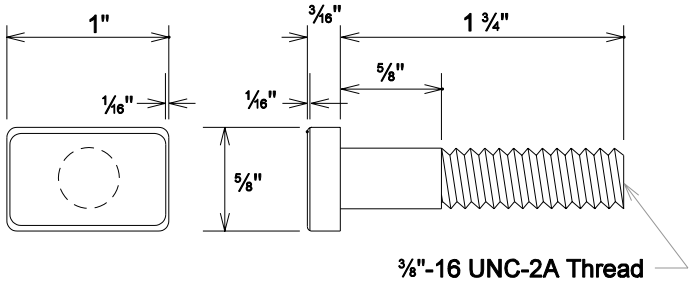

TOP VIEW

SIDE VIEW

POST CLIP BOLT

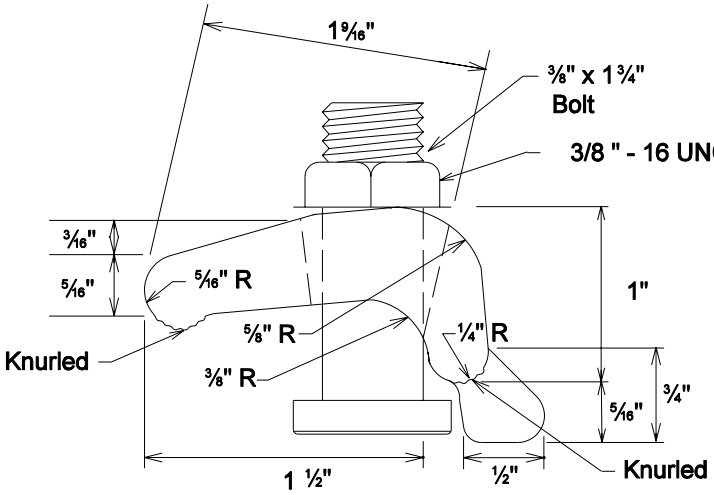

ELEVATION VIEW

INDIANA DEPARTMENT OF TRANSPORTATION

Panel Sign Post Clip

SEPTEMBER 2004

STANDARD DRAWING NO. E 802-SNGP-10A

RICHARD L. VanCLEAVE REGISTERED No. 9750 STATE OF INDIANA PROFESSIONAL ENGINEER

DESIGN STANDARDS ENGINEER

/s/ Richard L. VanCleave 9-01-04
DESIGN STANDARDS ENGINEER DATE

/s/ Richard K. Smutzer 9-01-04
CHIEF HIGHWAY ENGINEER DATE