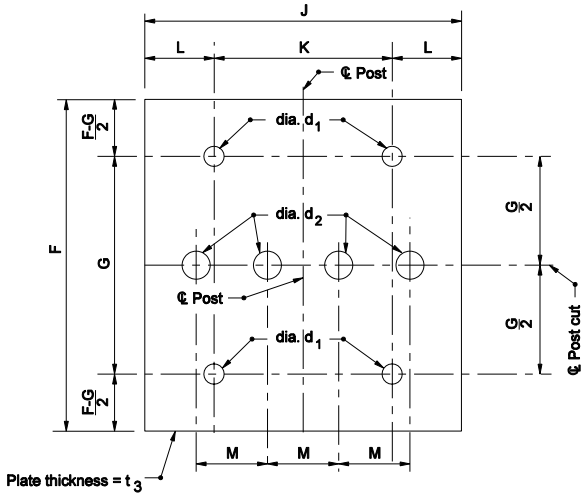


PERFORATED FUSE PLATE DETAIL (3.)

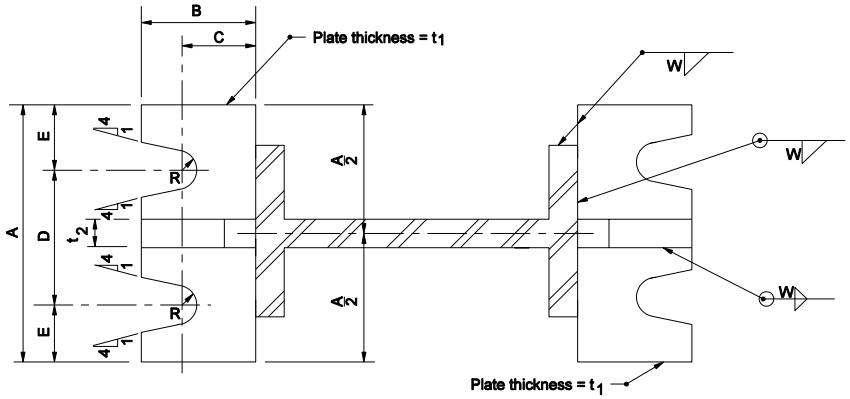


BASE PLATE DETAIL

Notes:

1. See table on Standard Drawing E 802-SNGP-05 for diminsions and weight of stiffener plate and base plate.
2. See table on Standard Drawing E 802-SNGP-06 for dimensions and weight of preforated fuse plate.
3. Use H.S. bolts with hex head, & hex nut, one flat washer under each bolt head and beveled or flat washer (where required) under nut.
4. Dimensional tolerances excluding the thickness for shims is ± 1/32".

| SHIM DETAIL | | | | | | |
|---|---|---|---|---|---|---|
| BOLT DIAMETER | L | W | N | R | S | X |
| ½" to ¾" | 1¾" | 1¾" | 15/32" | 13/32" | 13/16" | 15/32" |
| 1" | 2" | 2" | ⅜" | ⅝" | 1¼" | 15/32" |

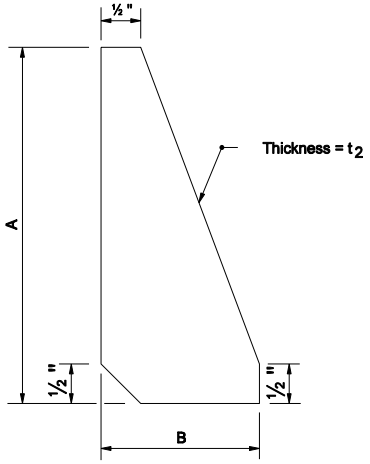


STIFFENER PLATE DETAIL

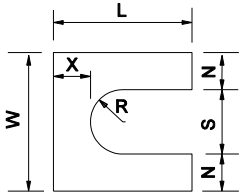


Furnish 2-0.012 ± thick and 2-0.03 ± thick shims per post.

SHIM DETAIL

INDIANA DEPARTMENT OF TRANSPORTATION

SIGN DETAILS

SEPTEMBER 2004

STANDARD DRAWING NO. E 802-SNGP-04

RICHARD L. VANCLEAVE REGISTERED No. 9750 STATE OF INDIANA PROFESSIONAL ENGINEER

DESIGN STANDARDS ENGINEER

/s/ Richard L. VanCleave 9-01-04
DESIGN STANDARDS ENGINEER DATE

/s/ Richard K. Smutzer 9-01-04
CHIEF HIGHWAY ENGINEER DATE