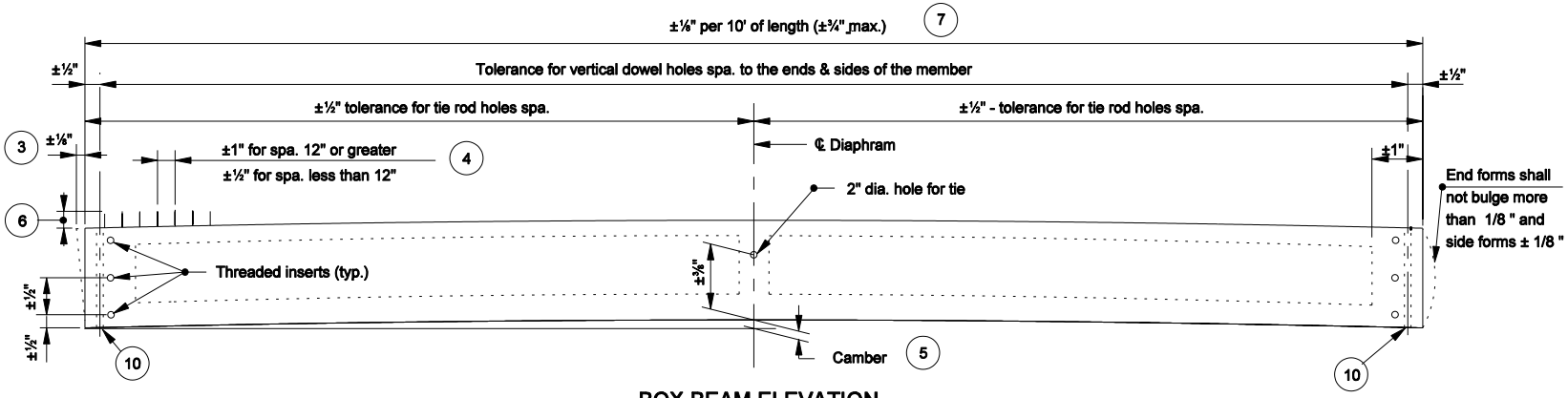

BOX BEAM ELEVATION

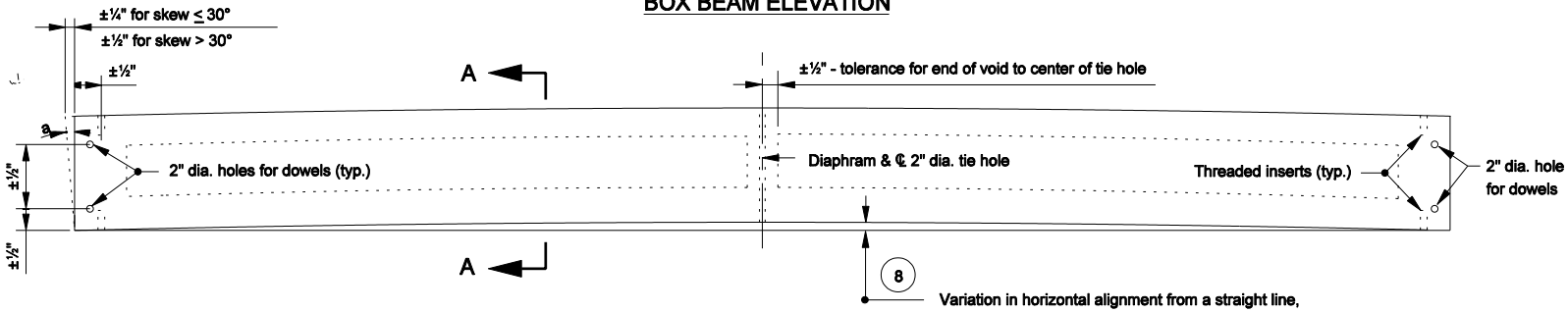

BOX BEAM PLAN

Variation in horizontal alignment from a straight line, end to end of beam and parallel to centerline of beam shall be: ± 1/4." up tp 40' beam lengths, ± 3/8 " for 40' to 60' beam lengths, ± 1/2 " for above 60' lengths.

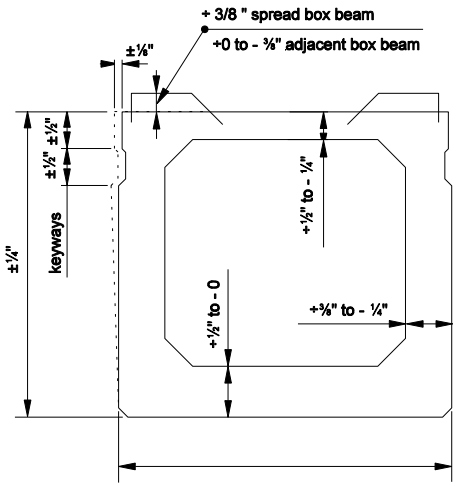

SECTION A-A

NOTES :

1. For General Notes see Standard Drawing E 707-BPBF-03.
2. The top surface of box beam shall not vary more than ⅛" in 10' as measured from a straightedge.

(3) Tolerance of beam ends for deviation from a true vertical with respect to top and bottom surfaces.

(4) Tolerances for reinforcing bars for composite beam.

(6) Projection above top of spread box beam shall be ± 3/8 ". Projection above top of adjacent box beam + 0 to - 3/8 ".

INDIANA DEPARTMENT OF TRANSPORTATION

FABRICATION TOLERANCES PRESTRESSED BOX BEAM

SEPTEMBER 2004

STANDARD DRAWING NO. E 707-BPBF-01

RICHARD L. VanCLEAVE REGISTERED No. 9750 STATE OF INDIANA PROFESSIONAL ENGINEER

DESIGN STANDARDS ENGINEER

/s/ Richard L. VanCleave 9-01-04
DESIGN STANDARDS ENGINEER DATE

/s/ Richard K. Smutzer 9-01-04
CHIEF HIGHWAY ENGINEER DATE