NOTES:

1. See Standard Drawing E-706-TASE-05 for General Notes.

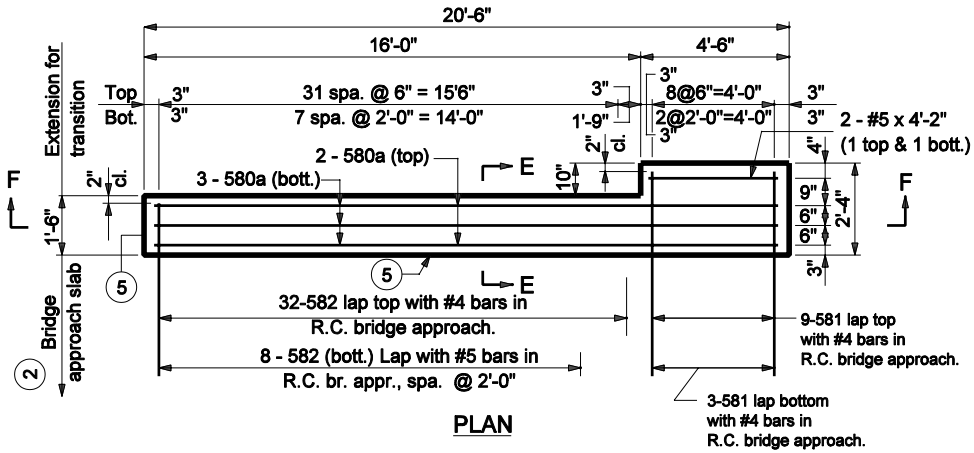

PLAN

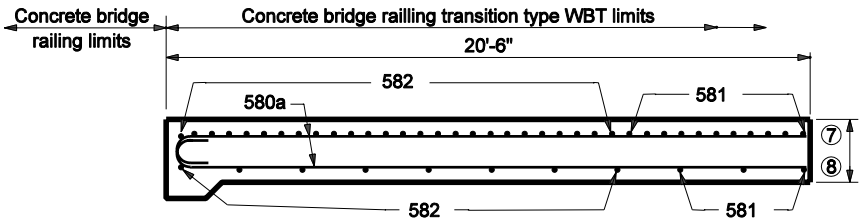

SECTION F-F

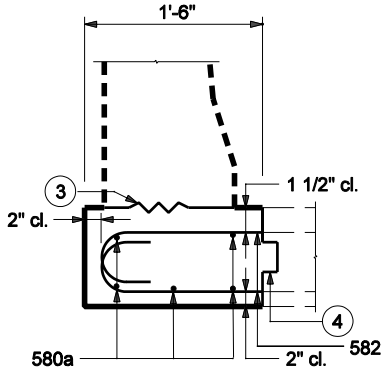

SECTION E-E

BILL OF MATERIALS			
These quantities are for one approach slab extension.			
EPOXY COATED REINFORCING STEEL			
Size & type	No. of Bars	Length	Weight (lb)
580a	5	20'-7"	
581	12	5'-0"	
582	40	4'-2"	
#5	2	4'-2"	
Total #5 Bars			352
Total Epoxy Coated Steel			352
MISCELLANEOUS			
10" R.C. Pvmt.			3.8 yd^2

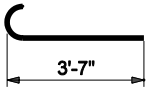

582 x 4'-2"

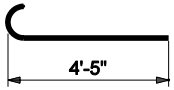

581 x 5'-0"

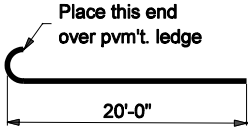

580a x 20'-7"

INDIANA DEPARTMENT OF TRANSPORTATION

BRIDGE RAILING TRANSITION
WBT SLAB EXTENSION

SEPTEMBER 2004

STANDARD DRAWING NO. E 706-TASE-04

DESIGN STANDARDS ENGINEER

/s/ Richard L. VanCleave 9-01-04
DESIGN STANDARDS ENGINEER DATE

/s/ Richard K. Smutzer 9-01-04
CHIEF HIGHWAY ENGINEER DATE