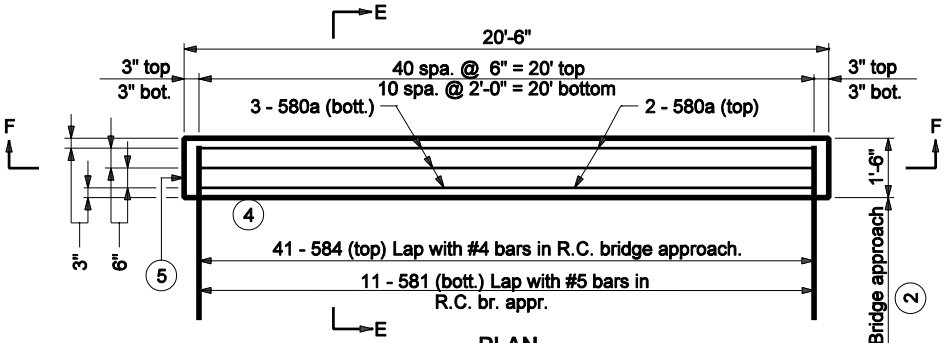

PLAN

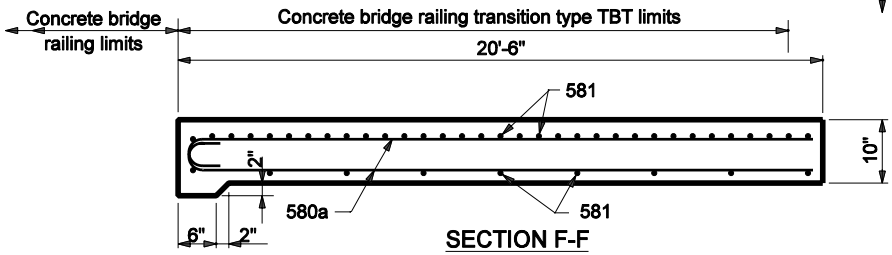

SECTION F-F

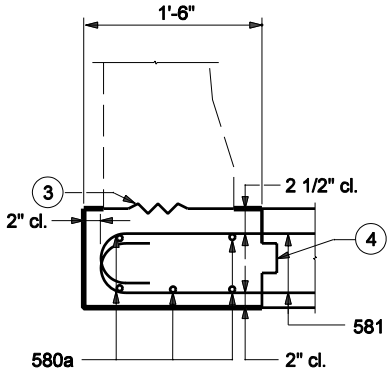

SECTION E-E

BILL OF MATERIALS			
These quantities are for one side Approach Slab Extension.			
EPOXY COATED REINFORCING STEEL			
Size & Mark	No. of Bars	Length (ft.)	Weight (lb)
580a	5	20'-9"	
581	52	4'-2"	
Total #5 Bars			334
Total Epoxy Coated Steel			334
MISCELLANEOUS			
R.C. Br. Appr., 10"			3.4 yd^2

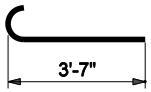

581 x 4'-2"

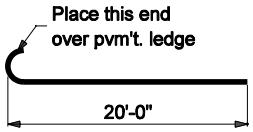

580a x 20'-7"

APPROACH SLAB EXTENSION DETAILS

NOTES:

1. See Standard Drawing E 706-TTBT-01 through -03 for concrete bridge railing transition type TBT details.
2. See Standard Drawing E 706-TASE-05 for General Notes.

INDIANA DEPARTMENT OF TRANSPORTATION

BRIDGE RAILING TRANSITION TBT SLAB EXTENSION

SEPTEMBER 2004

STANDARD DRAWING NO. E 706-TASE-02

RICHARD L. VANCLEAVE REGISTERED No. 9750 STATE OF INDIANA PROFESSIONAL ENGINEER

DESIGN STANDARDS ENGINEER

/s/ Richard L. VanCleave 9-01-04
DESIGN STANDARDS ENGINEER DATE

/s/ Richard K. Smutzer 9-01-04
CHIEF HIGHWAY ENGINEER DATE