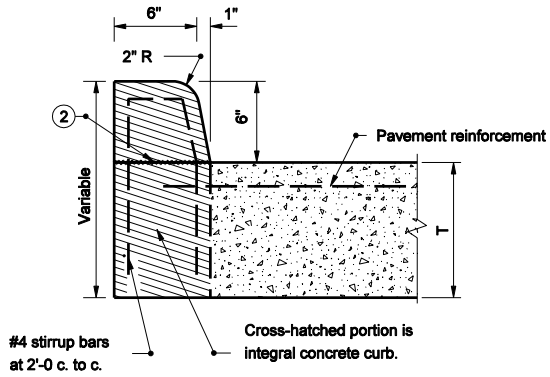

INTEGRAL CONCRETE CURB
(BARRIER)

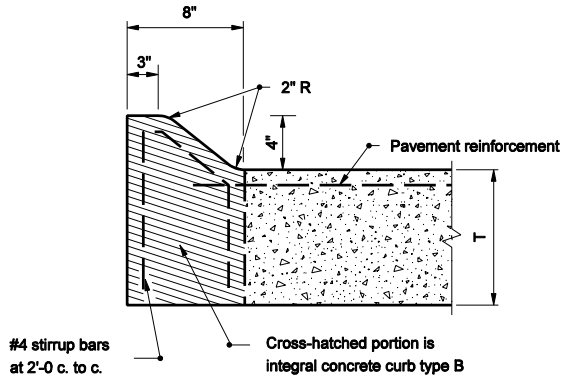

INTEGRAL CONCRETE CURB
TYPE B
(MOUNTABLE)

NOTES

1. 8" for integral concrete curb type B or C and 7" for integral concrete curb.
2. Concrete below this line may be poured with the pavement.

LEGEND

T = Nominal pavement thickness

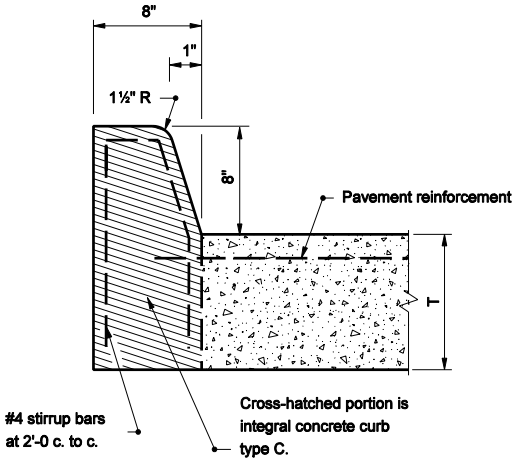

INTEGRAL CONCRETE CURB
TYPE C
(BARRIER)

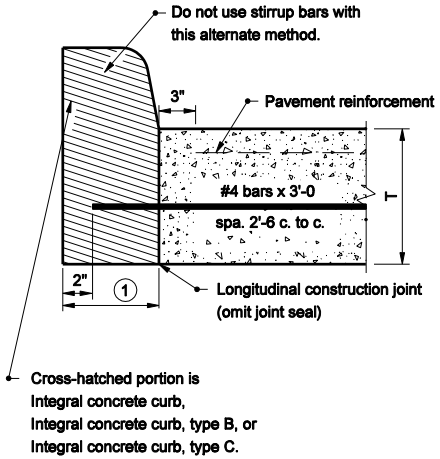

ALTERNATE METHOD
OF CONSTRUCTION FOR ALL TYPES
OF INTEGRAL CONCRETE CURB

INDIANA DEPARTMENT OF TRANSPORTATION

INTEGRAL CONCRETE CURB

SEPTEMBER 2004

STANDARD DRAWING NO. E 605-CCIN-01

RICHARD L. VanCLEAVE REGISTERED No. 9750 STATE OF INDIANA PROFESSIONAL ENGINEER

DESIGN STANDARDS ENGINEER

/s/ Richard L. VanCleave 9-01-04
DESIGN STANDARDS ENGINEER DATE

/s/ Richard K. Smutzer 9-01-04
CHIEF HIGHWAY ENGINEER DATE