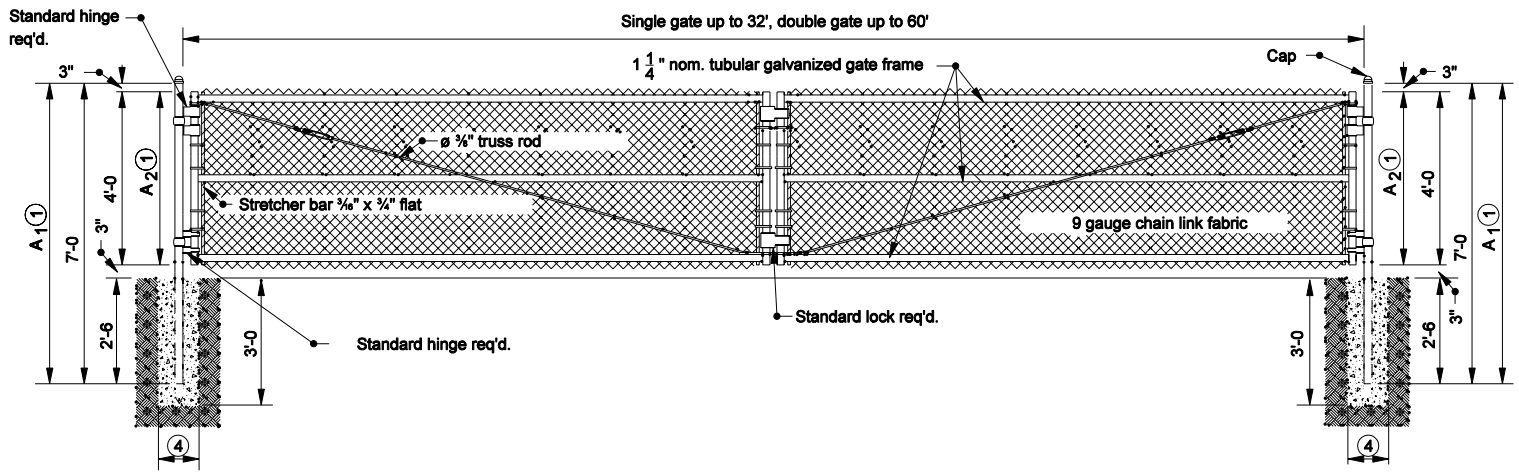

CHAIN LINK GATE

GENERAL NOTES

(1) For each additional 1'-0 in height increase dimension A_1 and A_2 by 1'-0.

2. See Standard Drawing E 603-CLTF-01 for the tubular post chart.

3. Dimensions as shown are for 4'-0 fence.

(4) Diameter equals 10" plus the outside diameter of the post.

INDIANA DEPARTMENT OF TRANSPORTATION

CHAIN LINK TYPE GATE

SEPTEMBER 2004

STANDARD DRAWING NO. E 603-CLTF-03

RICHARD L. VanCLEAVE REGISTERED No. 9750 STATE OF INDIANA PROFESSIONAL ENGINEER

DESIGN STANDARDS ENGINEER

/s/ Richard L. VanCleave 9-01-04
DESIGN STANDARDS ENGINEER DATE

/s/ Richard K. Smutzer 9-01-04
CHIEF HIGHWAY ENGINEER DATE