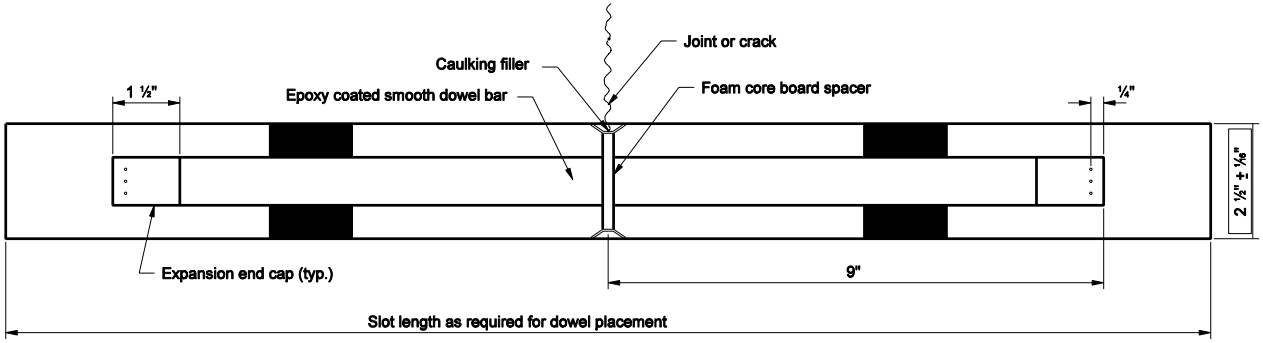

PLAN

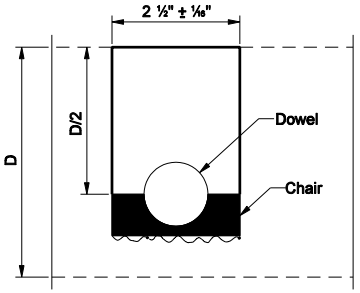

SECTION A-A

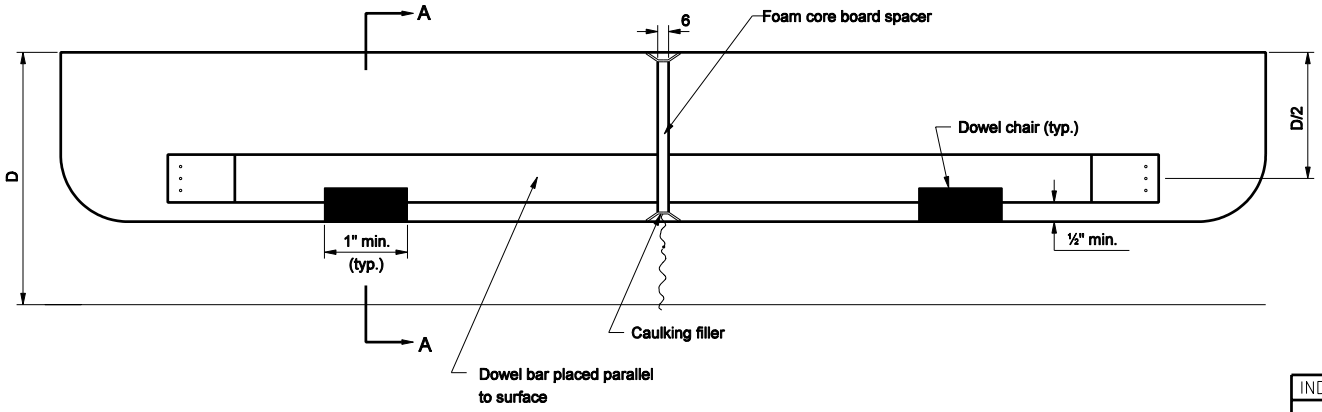

ELEVATION

NOTES:

1. For dowel slot layout requirements, see Standard Drawing E 305-RLTC-02.

DOWEL BAR SIZES	
Pavement Thickness D	Minimum Dowel Bar Diameter
Less than 12"	1 ¼"
Greater than or equal to 12"	1 ½"

DOWEL SLOT DETAILS

INDIANA DEPARTMENT OF TRANSPORTATION

RETROFIT LOAD TRANSFER FOR PCCP

SEPTEMBER 2004

STANDARD DRAWING NO. E 507-RLTC-01

RICHARD L. VanCLEAVE REGISTERED No. 9750 STATE OF INDIANA PROFESSIONAL ENGINEER

DESIGN STANDARDS ENGINEER

/s/ Richard L. VanCleave 9-01-04
DESIGN STANDARDS ENGINEER DATE

/s/ Richard K. Smutzer 9-01-04
CHIEF HIGHWAY ENGINEER DATE