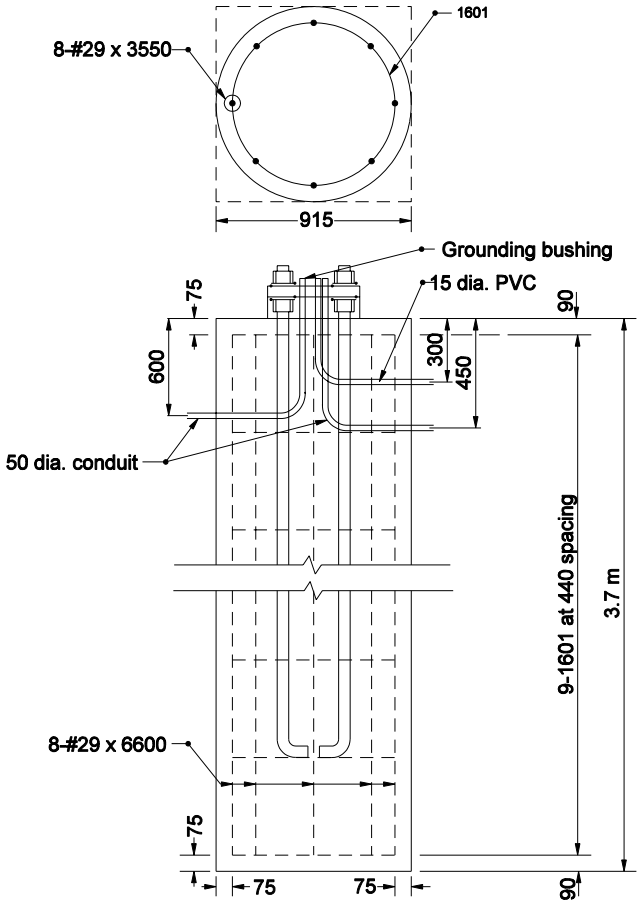

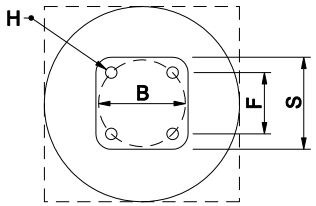

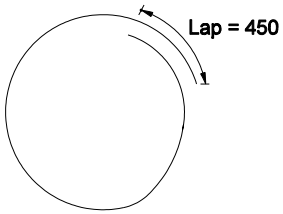

1601 x 2850

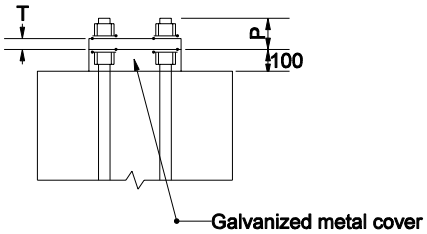

BASE PLATE AND ANCHOR BOLT DATA								
Anchor bolts	B	F	H	P	S	T	Pole size	Foundation
M56 x 2450	560	395	70	120	585	65	380 x 903 m 430 x 11.0 m	915 x 3.7 m

All dimensions are in mm unless otherwise specified

INDIANA DEPARTMENT OF TRANSPORTATION

STEEL SIGNAL STRAIN POLE FOUNDATION DETAILS

SEPTEMBER 2004

STANDARD DRAWING NO. 805-SGSC-02

RICHARD L. VanCLEAVE REGISTERED No. 9750 STATE OF INDIANA PROFESSIONAL ENGINEER

DESIGN STANDARDS ENGINEER

/s/ Richard L. VanCleave 9-01-04
DESIGN STANDARDS ENGINEER DATE

/s/ Richard K. Smutzer 9-01-04
CHIEF HIGHWAY ENGINEER DATE