NOTES

1. See Standard Drawing 802-SNOH-04 for dimensions not shown.
2. Max. deviation of any chord from a straight line in any section shall be 3mm. Box truss to be max. of 10mm. out of a straight line over the entire length of the structurein the vertical plane.
3. End internal diagonal (e) shall connect to the chord where the top horizontal diagonal connects to this chord as shown in plans and end elevation.

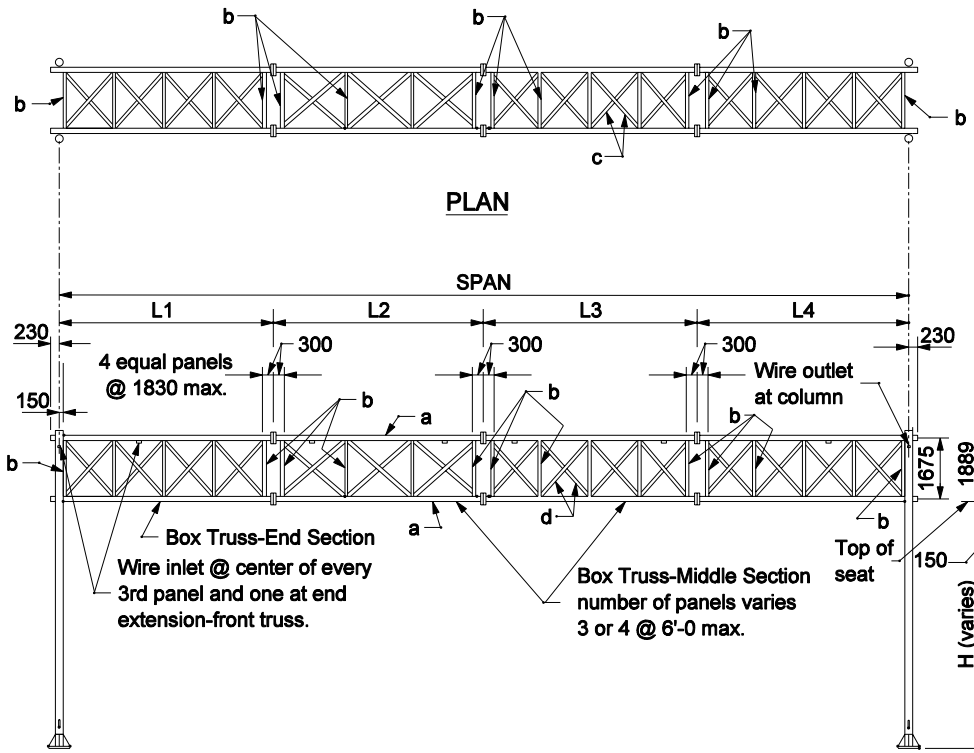

ELEVATION
Facing Traffic

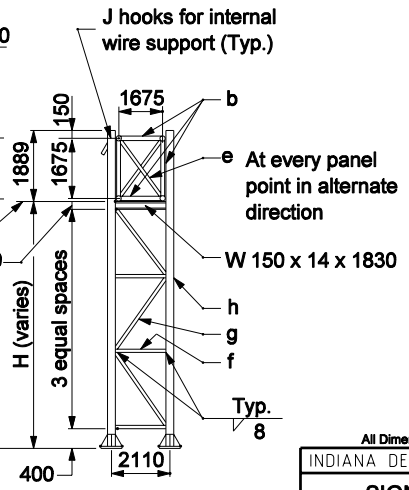

END ELEV.

All Dimension are in mm unless otherwise specfied

INDIANA DEPARTMENT OF TRANSPORTATION

SIGN STRUCTURE TRUSS
ALUM. DETAILS

SEPTEMBER 2004

STANDARD DRAWING NO. 802-SNOH-01

RICHARD L. VanCLEAVE REGISTERED No. 9750 STATE OF INDIANA PROFESSIONAL ENGINEER

DESIGN STANDARDS ENGINEER

/s/ Richard L. VanCleave 9-01-04
DESIGN STANDARDS ENGINEER DATE

/s/ Richard K. Smutzer 9-01-04
CHIEF HIGHWAY ENGINEER DATE