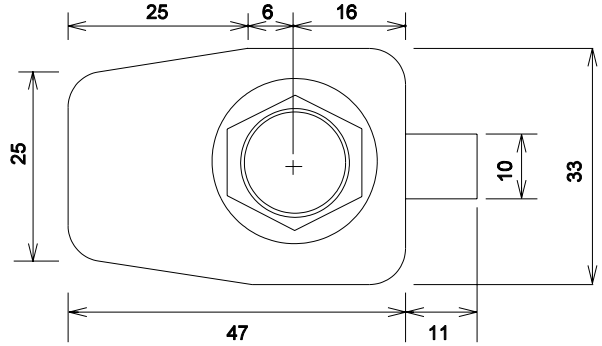

PLAN VIEW

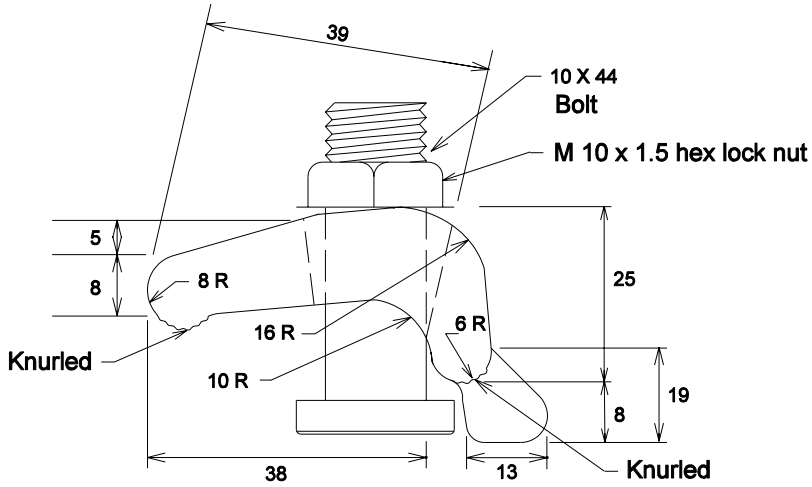

ELEVATION VIEW

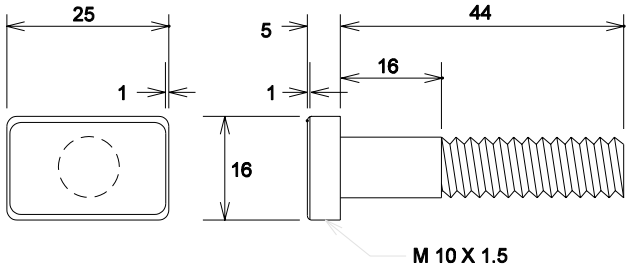

TOP VIEW

SIDE VIEW

POST CLIP BOLT

All dimensions are in mm unless otherwise specfied

INDIANA DEPARTMENT OF TRANSPORTATION

Panel Sign Post Clip

SEPTEMBER 2004

STANDARD DRAWING NO. 802-SNGP-10A

RICHARD L. VanCLEAVE REGISTERED No. 9750 STATE OF INDIANA PROFESSIONAL ENGINEER

DESIGN STANDARDS ENGINEER

/s/ Richard L. VanCleave 9-01-04
DESIGN STANDARDS ENGINEER DATE

/s/ Richard K. Smutzer 9-01-04
CHIEF HIGHWAY ENGINEER DATE