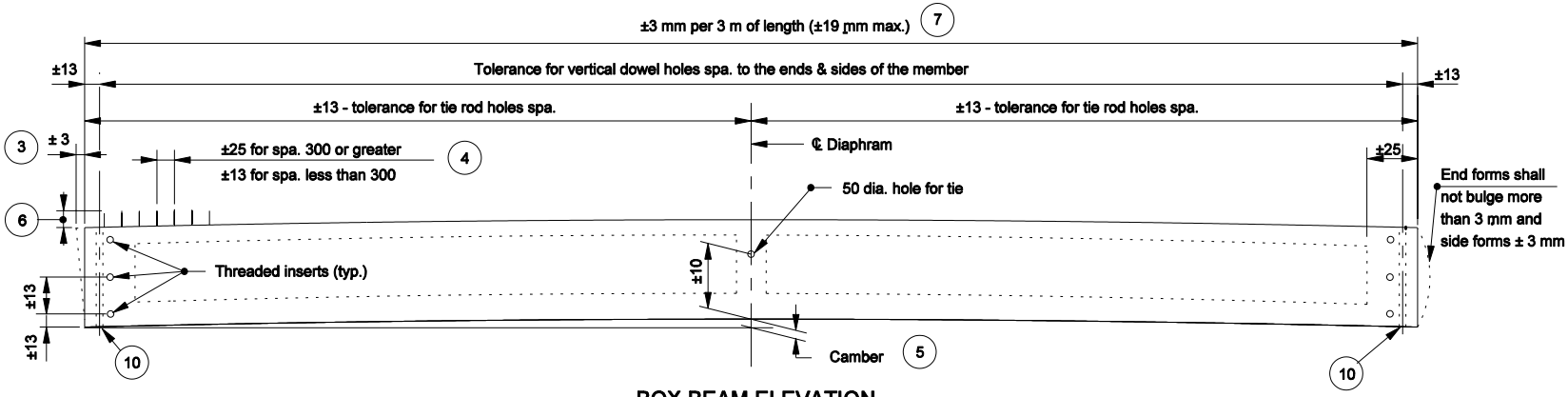

BOX BEAM ELEVATION

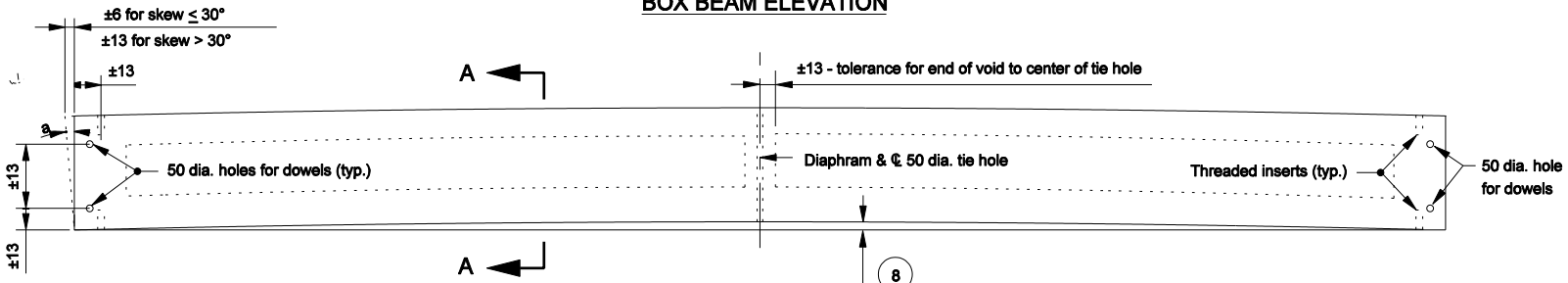

Variation in horizontal alignment from a straight line, end to end of beam and parallel to centerline of beam shall be: ± 6 up to 12 m beam lengths, ±10 for 12 m to 18 m beam lengths, ±13 for above 60' lengths.

BOX BEAM PLAN

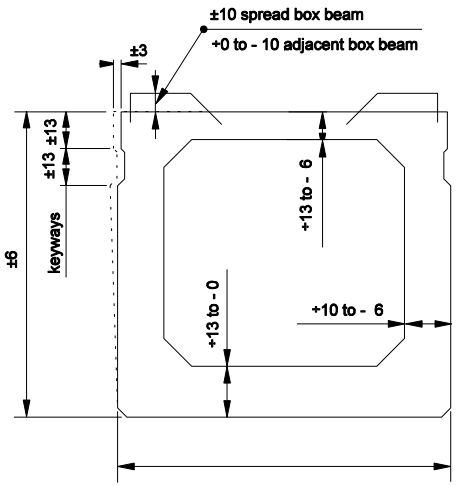

SECTION A-A

NOTES :

1. For General Notes see Standard Drawing 707-BPBF-03.
2. The top surface of box beam shall not vary more than 3 mm in 3 m as measured from a straightedge.

(3) Tolerance of beam ends for deviation from a true vertical with respect to top and bottom surfaces.

(4) Tolerances for reinforcing bars for composite beam.

(6) Projection above top of spread box beam shall be ±10 mm. Projection above top of adjacent box beam + 0 to -10 mm.

All dimensions are in mm unless otherwise specfied

INDIANA DEPARTMENT OF TRANSPORTATION

FABRICATION TOLERANCES PRESTRESSED BOX BEAM

SEPTEMBER 2004

STANDARD DRAWING NO. 707-BPBF-01

RICHARD L. VanCLEAVE REGISTERED No. 9750 STATE OF INDIANA PROFESSIONAL ENGINEER

DESIGN STANDARDS ENGINEER

/s/ Richard L. VanCleave 9-01-04
DESIGN STANDARDS ENGINEER DATE

/s/ Richard K. Smutzer 9-01-04
CHIEF HIGHWAY ENGINEER DATE