NOTES:

1. See Standard Drawing 706-TASE-05 for General Notes.

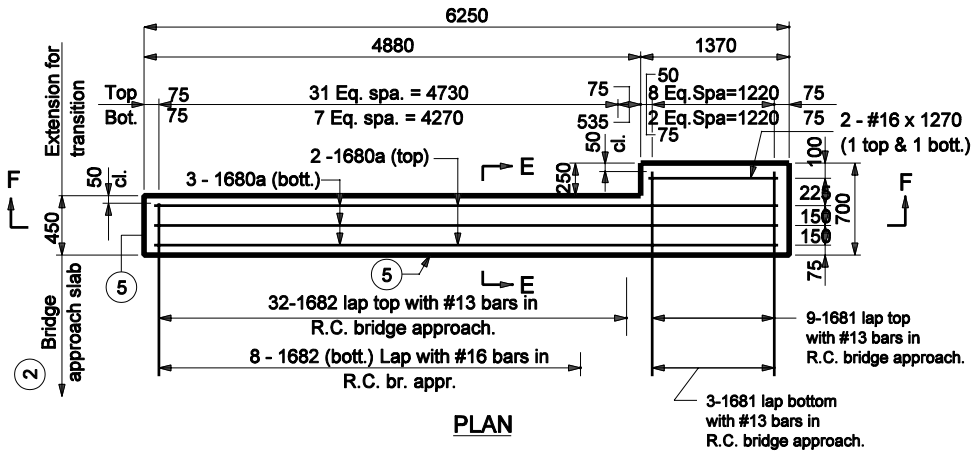

PLAN

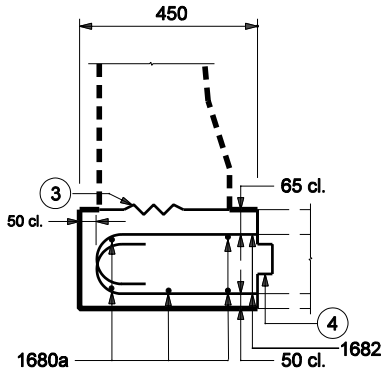

SECTION E-E

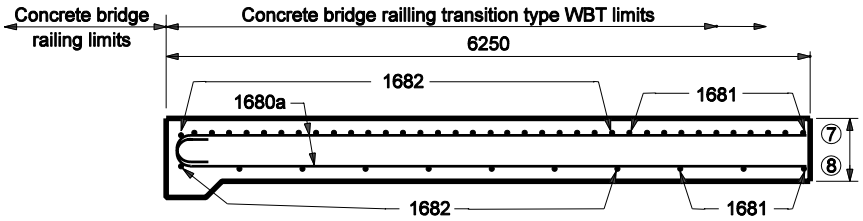

SECTION F-F

BILL OF MATERIALS			
These quantities are for one approach slab extension.			
EPOXY COATED REINFORCING STEEL			
Size & type	No. of Bars	Length	Weight (lb)
1680a	5	6280	
1681	12	1520	
1682	40	1280	
#16	2	1270	
Total #16 Bars			160
Total Epoxy Coated Steel			160
MISCELLANEOUS			
250 R.C. Pvmt.			3.2 m^2

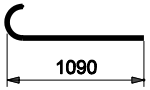

1682 x 1280

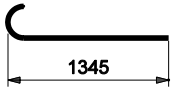

1681 x 1520

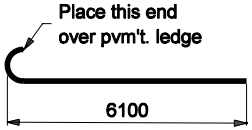

1680a x 6280

All dimensions are in mm unless otherwise specified

INDIANA DEPARTMENT OF TRANSPORTATION

BRIDGE RAILING TRANSITION WBT SLAB EXTENSION

SEPTEMBER 2004

STANDARD DRAWING NO. 706-TASE-04

RICHARD L. VanCLEAVE REGISTERED No. 9750 STATE OF INDIANA PROFESSIONAL ENGINEER

DESIGN STANDARDS ENGINEER

/s/ Richard L. VanCleave 9-01-04
DESIGN STANDARDS ENGINEER DATE

/s/ Richard K. Smutzer 9-01-04
CHIEF HIGHWAY ENGINEER DATE