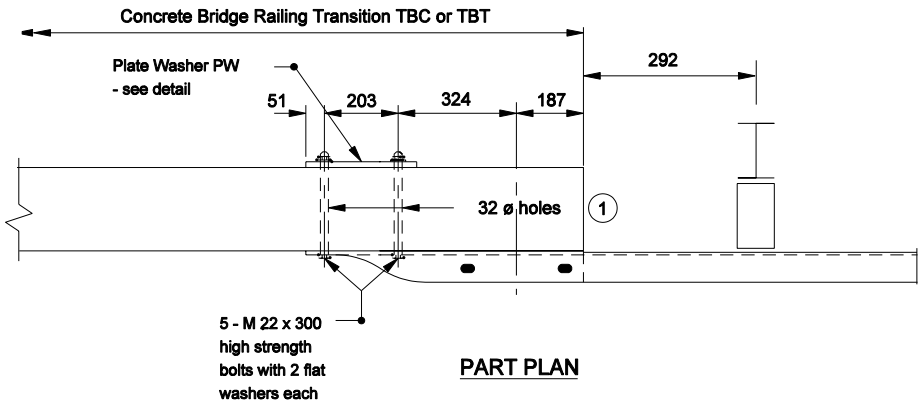

PART PLAN

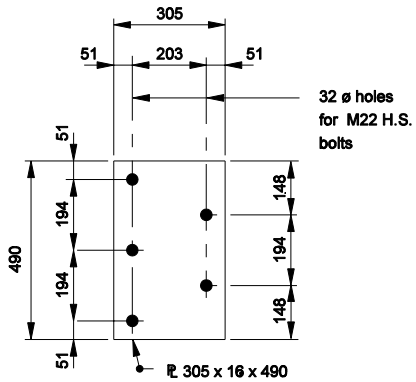

PLATE WASHER PW

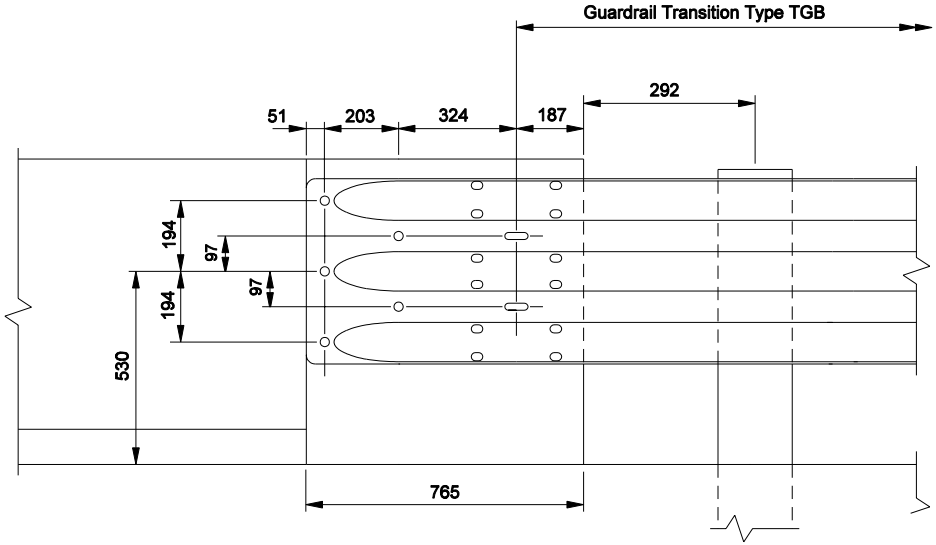

PART ELEVATION

NOTES:

1. These holes, required for the connection of the guardrail transition type TGB to the end of the concrete bridge railing transition, shall be preformed.

2. This drawing shall be used in conjunction with bridge railing type TBC as shown on Standard Drawing 706-TTBC-01, or type TBT as shown on 706-TTBT-01 and Guardrail transition type TGB as shown on Standard Drawing 601-TTGB-01.

All dimensions are in mm unless otherwise specfied

INDIANA DEPARTMENT OF TRANSPORTATION

BRIDGE RAILING TRANSITION TBC OR TBT ATTACHMENT OF GUARDRAIL

SEPTEMBER 2004

STANDARD DRAWING NO. 706-CBRT-02

RICHARD L. VanCLEAVE REGISTERED No. 9750 STATE OF INDIANA PROFESSIONAL ENGINEER

DESIGN STANDARDS ENGINEER

/s/ Richard L. VanCleave 9-01-04
DESIGN STANDARDS ENGINEER DATE

/s/ Richard K. Smutzer 9-01-04
CHIEF HIGHWAY ENGINEER DATE